NAS7.10563
NASA-JPL
SSIC No. 9661

FINAL

CDPH POLICY MEMORANDUM
97-005 DOCUMENTATION
RAYMOND BASIN, MONK HILL SUBAREA

Prepared for:

California Department of Public Health
Southern California Branch - Drinking Water Field Operations
1449 W. Temple Street, Room 202
Los Angeles, CA 90026

Prepared by:

Battelle
The Business of Innovation

505 King Avenue
Columbus, OH 43201

On behalf of:

National Aeronautics and Space Administration
Management Office, Jet Propulsion Laboratory
4800 Oak Grove Drive
Pasadena, CA 91109

April 2010

APPROVALS

Approved by:_____ **Date:**_____
Keith Fields, P.E.
Battelle Program Manager

Final

CDPH Policy Memorandum
97-005 Documentation
Raymond Basin, Monk Hill Subarea

Prepared for

California Department of Public Health
Southern California Branch - Drinking Water Field Operations
1449 W. Temple Street, Room 202
Los Angeles, CA 90026

Prepared by

National Aeronautics and Space Administration
Management Office, Jet Propulsion Laboratory
4800 Oak Grove Drive
Pasadena, CA 91109

April 2010

Contents

Tables vi
Figures ix
Acronyms xii

1.0 Introduction 1
1.1 Description of Source Water 1
1.2 Applicability of CDPH Policy Memorandum 97-005 to the Production Wells 2

2.0 Source Water Assessment 3
2.1 Delineation of Source Water Capture Zones 3
2.1.1 Geology and Hydrogeology 3
2.1.1.1 Geologic Setting 3
2.1.1.2 Hydrogeologic Setting 3
2.1.1.3 Groundwater Flow Conditions 5
2.1.2 Delineation and Identification of Capture Zones 5
2.2 Origin of Known Chemicals in the Source Water and Prediction of Concentration Trends 7
2.2.1 Jet Propulsion Laboratory Facility 7
2.2.1.1 Remedial Investigation for Soil 8
2.2.1.2 Remedial Investigation for Groundwater 10
2.2.1.3 Long-Term Groundwater Monitoring Program 14
2.2.1.4 Concentration Trends 15
2.2.1.5 Tentatively Identified Compounds 21
2.2.2 Upgradient Groundwater 22
2.3 Identification of Chemicals Used at or Generated by Facilities Responsible for Chemicals Known to be in Source Water 23
2.3.1 Jet Propulsion Laboratory 24
2.3.1.1 Environmental Database Review 24
2.3.1.2 Review of Previous Investigations and Studies for JPL 24
2.3.1.3 National Archives and Records Administration Review 25
2.3.1.4 Summary of Chemicals Used at or Generated by JPL 25
2.3.2 Upgradient Groundwater 25
2.4 Identification of Other Potential Sources and Determination of the Vulnerability of the Source Water to these Other Sources 27
2.4.1 Identification of Other Potential Sources 27
2.4.1.1 Landfills 27
2.4.1.2 Hazardous Waste Generators 28
2.4.1.3 Underground Storage Tanks 29
2.4.1.4 Documented Spills/Leaks/Discharges 30
2.4.1.5 Treatment Plant Effluent Water 30
2.4.2 Assessment of the Vulnerability of the Drinking Water Source 31
2.4.3 Chemicals Potentially Impacting Groundwater Within the Capture Zones of the Production Wells 32

2.4.3.1 Fate and Transport Modeling 33
2.5 Summary 35
2.5.1 Known and Potential Sources 35
2.5.2 Detected Chemicals 36
2.5.3 Chemical Level Trends 36
2.5.4 Chemicals Potentially Impacting Groundwater 37
2.5.5 Vulnerability of Aquifer 38

3.0 Raw Water Quality Characterization 40
3.1 Raw Water Quality Based on Historical Production Well Data 40
3.1.1 Arroyo Well and Well 52 40
3.1.2 Ventura and Windsor Welsl 41
3.1.3 LAWC Well #3 and Well #5 42
3.1.4 Rubio Canyon Well #4 and Well #7 42
3.1.5 Las Flores Well 2 43
3.2 Variability of Chemical Concentrations Based on Historical Production Well Data 43
3.2.1 Nitrate Evaluation 45
3.3 Estimates of Raw Water Quality for Water Treatment Plant Influent 46
3.3.1 Identification of Chemicals 46
3.3.2 Estimated Concentrations of COPCs in the Influent Streams 47
3.3.2.1 Arroyo Well and Well 52 47
3.3.2.2 Ventura and Windsor Wells 48
3.3.2.3 LAWC Well #3 and Well #5 48
3.3.2.4 Rubio Cañon Well #4 and Well #7 48
3.3.2.5 Las Flores Well #2 49
3.6 Summary 49

4.0 Source Protection 51
4.1 Best Management Practices for Waste Handling and Management 51
4.2 Remedial Actions for OU-1 and OU-2 51
4.2.1 OU-1 52
4.2.1.1 Regulatory and Legal Considerations 53
4.2.2 OU-2 55
4.2.2.1 CERCLA AND NCP Requirements 56
4.3 Other Source Protection Activities 56
4.3.1 La Cañada-Flintridge 57
4.3.2 MWD 57
4.3.3 Former Landfills/Disposal Areas 58
4.4 Regulatory Communications Plan 59

5.0 Effective Monitoring and Treatment 61
5.1 PWP Treatment System 61
5.1.1 Treatment System Description 61
5.1.1.1 Feed Pumps 62
5.1.1.2 Inlet Water Filter 62
5.1.1.3 Ion Exchange System 62
5.1.1.4 GAC System 63

5.1.1.5 Chloramination System....63
5.1.2 Performance Standards....64
5.1.3 Operations Plan and Reliability Features....64
5.1.3.1 Process Monitoring and System Reliability....64
5.1.3.1.1 Ion Exchange System Operation....64
5.1.3.1.2 GAC System Operation....65
5.1.3.2 Plant Optimization....67
5.1.3.3 Failure Response....67
5.1.4 Treatability Assessment and Monitoring Program....68
5.1.4.1 Treatability Assessment....68
5.1.4.2 Compliance Monitoring and Reporting Program....68
5.1.5 Water Quality Surveillance Plan....69
5.1.6 Emergency Notification/Contingency Plan....69
5.2 LAWC Treatment System....69
5.2.1 Treatment System Description....69
5.2.2 Performance Standards....70
5.2.3 Operations Plan and Reliability Features....71
5.2.3.1 Process Monitoring and System Reliability....71
5.2.3.2 Plant Optimization....72
5.2.3.3 Failure Response....72
5.2.4 Treatability Assessment and Monitoring Program....73
5.2.4.1 Treatability Assessment....73
5.2.4.2 Compliance Monitoring and Reporting Program....73
5.2.5 Water Quality Surveillance Plan....74
5.2.6 Emergency Notification/Contingency Plan....74
5.3 Las Flores Treatment System....75
5.3.1 Treatment System Description....75
5.3.2 Performance Standards....75
5.3.3 Operations Plan and Reliability Features....75
5.3.3.1 Process Monitoring and System Reliability....76
5.3.3.2 Plant Optimization....76
5.3.3.3. Failure Response....76
5.3.4 Treatability Assessment and Monitoring Program....77
5.3.4.1 Treatability Assessment....77
5.3.4.2 Compliance Monitoring and Reporting Program....77
5.3.5 Water Quality Surveillance Plan....78
5.3.6 Emergency Notification/Contingency Plan....78
5.4 Rubio Cañon Treatment System....79
5.4.1 Treatment System Description....79
5.4.2 Emergency Notification/Contingency Plan....79

6.0 Risks Associated with the Failure of the Treatment System....80
6.1 Introduction....80
6.2 Background....80
6.2.1 PWP Treatment System....80
6.2.2 Lincoln Avenue Water Treatment System....81
6.2.3 Las Flores Treatment System....81

6.3 Risk Results 82
6.3.1 Evaluation of Potential Failure Scenarios and Frequency of Occurrence 82
6.3.2 Health Risk Evaluation 82
6.3.2.1 Influent to PWP Treatment System 84
6.3.2.2 Influent to LAWC Treatment System 84
6.3.2.3 Las Flores Treatment System 84
6.3.2.4 Rubio Cañon Treatment System 84
6.4 Summary 85

7.0 Identification of Alternatives 86
7.1 Alternatives to Drinking Water from the Monk Hill Subbasin 86
7.2 Evaluation of Existing Sources 87
7.2.1 Comparison to Existing Sources 87
7.2.2 Assurance of Supply 88
7.2.3 Interruptions to Service 89
7.3 Evaluation of Disposal Alternatives 90
7.3.1 Arroyo Seco Spreading Grounds 90
7.3.2 Reinjection of Treated Water 91
7.4 Conclusions and Recommendations 91

8.0 References 92

APPENDICES

Appendix A: CDPH Policy Memorandum 97-005
Appendix B: Comprehensive Groundwater Monitoring Event
Appendix C: Nitrate Technical Memorandum
Appendix D: Environmental Database Review
Appendix E: Millard Canyon Dump Closed Site Assessment Form
Appendix F: Perchlorate Breakthrough Curves
Appendix G: Specifications and Drawings for the Ion Exchange Vessels and Resin
Appendix H: GAC Specifications
Appendix I: Specifications and Drawings for the GAC Vessels
Appendix J: The Draft O&M Plan for the MHTS
Appendix K: Design Influent and Effluent Chemical Concentrations
Appendix L: Details of the US Filter Treatment System
Appendix M: Additional Details on the Ion Exchange Resin
Appendix N: O&M Plan for the LAWC Treatment System
Appendix O: CDPH Permit and Operational Requirements for the Las Flores Treatment System

Tables

1-1 Summary of Production Well Information

2-1 Summary of Pumping Rate Information Used to Simulate the Capture Zone Analysis

2-2 Summary of Chemicals Detected in Soil and Soil Gas Samples During the OU-2 Remedial Investigation

2-3 Summary of Chemicals Detected During the RI

2-4 Summary of Analyses Conducted for Specific Wells During the Comprehensive Groundwater Monitoring Event

2-5 Summary of Historical Water Quality Data

2-6 Summary of Unknown Scans and Tentatively Identified Compounds (TICs) noted during the 1994 OU-1/OU-3 RI Groundwater Monitoring and Long-term Quarterly Monitoring Program

2-7. Summary of TICs/Unknown Identified During the Comprehensive Groundwater Monitoring Event (December 2002/January 2003)

2-8 Tentatively Identified Compounds Detected During the 2006 Groundwater Sampling Events

2-9 Summary of Additional Analyte Results

2-10 Summary of Constituents Detected in the Valley Water Company Wells #1, #2, #3, and # 4

2-11 Chemicals Identified as Used at JPL from Review of the Environmental Database Search

2-12 Chemicals Used at JPL Based on Previous Studies and Investigations Review

2-13 Chemicals Used at JPL Based on National Archives and Records Administration Review

2-14 Summary of all Chemicals Used at or Generated by JPL

2-15 Potential Sources Identified in Databases

2-16 Hazardous Generator Activity and Waste Type

2-17 SWRCB LUST Site Summary and Status

2-18 Summary of Chemicals from Known and Potential Sources

2-19 Summary of Vulnerability of Groundwater to Individual Facilities Within the Capture Zones of the Production Wells

2-20 Summary of Chemicals/Chemical Groups known to be used at JPL, Identification of the Chemical of Interest, and Presence in Environmental Media

2-21 Matrix for Determining Chemical Constituents Potentially Impacting Groundwater Within the Capture Zones

2-22 Results of Fate and Transport Modeling Simulations

2-23 Comparisons of Measured Concentrations in JPL Wells Within Radii of Influence of Arroyo Well to Estimated Concentrations Determined from Groundwater Modeling

2-24 Summary of Chemicals Detected in the Source Water at Least Once

2-25 Summary of Chemicals Potentially Impacting Groundwater

3-1 Summary of Historical Water Quality Data for the Arroyo Well

3-2 Summary of Historical Water Quality Data for Well 52

3-3 Summary of Constituents Analyzed for in Groundwater Collected from the Ventura Production Well

3-4 Summary of Constituents Analyzed for in Groundwater Collected from the Windsor Production Well

3-5 Summary of Constituents Analyzed for in Groundwater Collected from the LAWC Well #3

3-6 Summary of Constituents Analyzed for in Groundwater Collected from the LAWC Well #5

3-7 Summary of Constituents Analyzed for in Groundwater Collected from the Rubio Cañon Well #4

3-8 Summary of Constituents Analyzed for in Groundwater Collected from the Rubio Cañon Well #7

3-9 Summary of Historical Water Quality Data for Las Flores Well #2

3-10 Chemicals Potentially Present in each of the Influent Streams

3-11 Influent Estimates for the Arroyo/Well 52 Water Treatment Plant

3-12 Influent Estimates for the Ventura/Windsor Water Treatment Plant

3-13 Influent Estimates for the LAWC #3/LAWC #5 Water Treatment Plant

3-14 Influent Estimates for the Rubio Cañon #4/Rubio Cañon #7 Water Treatment Plant

3-15 Influent Estimates for the Las Flores Water Treatment Plant

5-1 MHTS Sampling Locations and Monitoring Schedule

5-2 Summary of MHTS Equipment Instrumentation and Alarms

5-3 MHTS Treatability Assessment

5-4 LAWC Sampling Location and Monitoring Schedule

5-5 LAWC Treatability Assessment

5-6 Las Flores Water Company Sampling Location and Monitoring Schedule

5-7 Las Flores Treatability Assessment

6-1 Estimates of Risk Based on Treatment System Failure at the PWP Water Treatment Plant

6-2 Estimates of Risk Based on Treatment System Failure at the PWP Water Treatment Plant for Radionuclides

6-3 Estimates of Risk Based on Treatment System Failure at the Water Treatment Plant for the LAWC#3 and LAWC#5 Wells

6-4 Estimates of Risk Based on Treatment System Failure at the Water Treatment Plant for the LAWC#3 and LAWC#5 for Radionuclides

6-5 Estimates of Risk Based on Treatment System Failure at the Water Treatment Plant for the Las Flores Well

6-6 Estimates of Risk Based on Treatment System Failure at the Water Treatment Plant for the Las Flores Well for Radionuclides

6-7 Estimates of Risk Based on Treatment System Failure at the Water Treatment Plant for the Rubio Cañon #4 and #7 Wells

6-8 Estimates of Risk Based on Treatment System Failure at the Water Treatment Plant for the Rubio Cañon #4 and #7 Wells for Radionuclides

7-1 Summary of Water Quality Data for Pasadena Groundwater and MWD Surface Water for the Year 2008

7-2 Projected Treated Effluent and Comparison to Pasadena Groundwater and MWD Treated Surface Water Data

Figures

1-1 Locations of JPL Groundwater Monitoring Wells and Nearby Municipal Production Wells

1-2 Schematic of Arroyo Well

1-3 Schematic of Well 52

1-4 Schematic of Ventura Well

1-5 Schematic of Windsor Well

1-6 Well Log for Rubio Cañon Well #4

1-7 Well Log for Las Flores Well #2

2-1 Subareas of the Raymond Basin

2-2 Locations of Cross Sections

2-3 Geological Cross Sections (5 pages)

2-4 Formations Between Wells MW-24 through MW-8, MW-3, Arroyo Well, MW-17, LAWC #3

2-5 Formations Between Wells MW-21 through MW-5, MW-4, MW-12, 9, 15, and 1

2-6 Groundwater Elevation Contour Maps for Aquifer Layers 1, 2, and 3 when Nearby Municipal Production Wells are Operating

2-7 Groundwater Elevation Contours in Layer 1

2-8 Groundwater Elevation Contours in Layer 2

2-9 Groundwater Elevation Contours in Layer 3

2-10 Municipal Well Pumping Volumes, Precipitation Data, Spreading Basin Recharge Data, and Water Level Elevations from Multi-Port Wells in Modeling Aquifer Layer 1

2-11 Municipal Well Pumping Volumes, Precipitation Data, Spreading Basin Recharge Data, and Water Level Elevations from Multi-Port Wells in Modeling Aquifer Layer 2

2-12 Municipal Well Pumping Volumes, Precipitation Data, Spreading Basin Recharge Data, and Water Level Elevations from Multi-Port Wells in Modeling Aquifer Layer 3

2-13 Capture Zone for the Wells Located in the Top of Layer 1

2-14 Capture Zone for the Wells Located in the Bottom of Layer 1/ Top of Layer 2

2-15 Capture Zone for the Wells Located in the Bottom of Layer 2/ Top of Layer 3

2-16 Capture Zone for the Wells Located in the Bottom of Layer 3/Top of Layer 4

2-17 Approximate Locations of Seepage Pits, Waste Pits, and Discharge Points

2-18 Concentrations of Organic Compounds and Cyanide Detected in Soil During the OU-2 RI

2-19 MW-3 Perchlorate and VOC Concentration vs. Time

2-20 MW-4 Perchlorate and VOC Concentration vs. Time

2-21 MW-10 Perchlorate and VOC Concentration vs. Time

2-22 MW-17 Perchlorate and VOC Concentration vs. Time

2-23 MW-18 Perchlorate and VOC Concentration vs. Time

2-24 MW-19 Perchlorate and VOC Concentration vs. Time

2-25 Perchlorate and VOC Concentrations vs. Time for Each Well Group

2-26 PCE and TCE Concentrations Over Time in the Valley Water Company Wells

2-27 Nitrate Concentration Trends Over Time in the Valley Water Company Wells

2-28 Known and Potential Source Locations Within the Capture Zones

2-29 Groundwater Model Radii Around the Arroyo Well and JPL Monitoring Well Locations

3-1 Arroyo Well Perchlorate and VOC Concentrations vs Time

3-2 Well 52 Perchlorate and VOC Concentrations vs Time

3-3 Ventura Well Perchlorate and VOC Concentrations vs Time

3-4 Windsor Well Perchlorate and VOC Concentrations vs Time

3-5 Lincoln Well Perchlorate and VOC Concentrations vs Time

3-6 Rubio Cañon Perchlorate and VOC Concentrations vs Time

3-7 Las Flores Well Perchlorate and VOC Concentrations vs Time

4-1 Location of the Groundwater Source Area, Demonstration Study, and Expansion Area

4-2 Layout of the Demonstration System and the Expansion Area

4-3 Soil Vapor Monitoring and Extraction Well Locations

4-4 Cumulative Carbon Tetrachloride Mass Removal

4-5 Cumulative Trichloroethene Mass Removal

4-6 Cumulative VOC Mass Removal and Influent VOC Concentrations

5-1 MHTS Process Flow Diagram

5-2 LAWC Treatment System Process Flow Diagram

Acronyms

ANSI	American National Standards Institute
AOT	advanced oxidation treatment
ASTM	American Society of Testing Materials
ARAR	Applicable or Relevant and Appropriate Requirements
AT123D	Analytical Transient 1-, 2-, 3-Dimensional Model
ATSDR	Agency for Toxic Substances and Disease Registry
BDAT	best demonstrated available technology
bgs	below ground surface
BOD	biological oxygen demand
CCC	Calgon Carbon Corporation
CCR	California Code of Regulations
CDPH	California Department of Public Health
CERCLA	Comprehensive Environmental Response, Compensation, and Liability Act
CFR	Code of Federal Regulation
CGWME	Comphrehensive Groundwater Monitoring Event
CHMIRS	California Hazardous Material Incident Report System
CIP	Community Involvement Plan
COC	chemical of concern
COPC	chemical of potential concern
CWC	California Water Code
DBCP	1,2-dibromo-3-chloropropane
DC	direct current
DCA	dichloroethane
DCE	dichloroethene
DHS	(California) Department of Health Services
DO	dissolved oxygen
DTSC	(California) Department of Toxic Substances Control
DWSAP	Drinking Water Source Assessment Protection
EDB	1,2-dibromoethane
EDR	Environmental Data Resources
EPA	(United States) Environmental Protection Agency
ERNS	Emergency Response Notification System
FBR	fluidized bed reactor
FFA	Federal Facility Agreement
FMWD	Foothill Municipal Water District
FWEC	Foster Wheeler Environmental Corporation
GAC	granular activated carbon

gpm	gallon per minute
HAZNET	(California) Hazardous Waste Information System
HI	hazard index
HMX	high-velocity military explosive
HPC	heterotrophic plate count
HQ	hazard quotient
HRS	Hazard Ranking System
JPL	Jet Propulsion Laboratory
LAWC	Lincoln Avenue Water Company
LDR	land disposal restriction
LF	Landfill Facility
LGAC	liquid-phase granular activated carbon
LIA	Local Implementing Agency
LQG	large quantity generator
LUST	leaking underground storage tank
MCL	maximum contaminant level
MHTS	Monk Hill Treatment System
MSW	municipal solid waste
MTBE	methyl-*tert*-butyl ether
MWD	Metropolitan Water District
NARA	National Archives and Records Administration
NASA	National Aeronautics and Space Administration
NCP	National Contingency Plan
NDBA	n-nitrosodi-n-butylamine
NDEA	n-nitrosodiethylamine
NDEP	Nevada Division of Environmental Protection
NDMA	*n*-nitrosodimethylamine
NL	notification level
NDPA	n-nitrosodi-n-propylamine
NDPHA	n-nitrosodiphenyl-amine
NPIP	n-nitrosodipiperidine
NPL	National Priorities List
NSF	National Sanitation Foundation
O&M	operations and maintenance
ORP	oxygen reduction potential
OU	Operable Unit
PAH	polynuclear aromatic hydrocarbons
PA/SI	preliminary assessment/site inspection
PCB	polychlorinated biphenyls
PCE	tetrachloroethene
PHG	public health goal

ppb	parts per billion
POTW	publicly owned treatment works
psi	pounds per square inch
PWP	Pasadena Water and Power
RAO	Remedial Action Objective
RBMB	Regional Basin Management Board
RCRA	Resource Conservation and Recovery Act
RCRIS	Resource Conservation and Recovery Information System
RD/RA	Remedial Design/Remedial Action
RDX	royal demolition explosive
RI	Remedial Investigation
ROD	Record of Decision
RSL	Regional Screening Level
RWQC	Raw Water Quality Characterization
RWQCB	Regional Water Quality Control Board, Los Angeles Region
SARA	Superfund Amendments and Reauthorization Act
SCADA	Supervisory Control and Data Acquisition
SOC	synthetic organic compound
SQG	small quantity generator
SWA	Source Water Assessment
SWF	Solid Waste Facility
SWIS	Solid Waste Information System
SWRCB	State Water Resources Control Board
SVE	soil vapor extraction
SVOC	semivolatile organic compound
TCE	trichloroethene
TCP	trichloropropane
TDS	total dissolved solid
TIC	tentatively identified compound
TNT	2,4,6-trinitrotoluene
TOC	total organic carbon
TPH	total petroleum hydrocarbons
TPH-D	total petroleum hydrocarbons quantified as diesel
TPH-MO	total petroleum hydrocarbons quantified as motor oil
UBC	Uniform Building Code
USC	United States Code
USGS	United States Geological Survey
UST	underground storage tank
VDC	volt direct current
VOC	volatile organic compound
WDR	waste discharge requirement

WDS	waste discharge system

1.0 Introduction

The National Aeronautics and Space Administration (NASA) is responsible for remediation of chemicals originating from the Jet Propulsion Laboratory (JPL) site, as required under the Comprehensive Environmental Response, Compensation, and Liability Act (CERCLA) as amended by the Superfund Amendments and Reauthorization Act (SARA). This cleanup effort includes treatment of groundwater extracted from drinking water production wells containing site-related chemicals of interest, which include volatile organic compounds (VOCs) and perchlorate. NASA is evaluating treatment requirements at nine drinking water production wells in the Monk Hill Subarea of the Raymond Basin: the Arroyo Well, Well 52, the Ventura Well, and the Windsor Well operated by Pasadena Water and Power (PWP); Wells #3 and #5 operated by the Lincoln Avenue Water Company (LAWC); Wells #4 and #7 operated by the Rubio Cañon Land and Water Association; and Well #2 operated by the Las Flores Water Company. Figure 1-1 shows the location of these production wells.

Because the source water for these nine wells meets the criteria of an "extremely impaired source" as defined in California's Department of Public Health[1] (CDPH) Policy Memorandum 97-005, this document has been prepared as part of the domestic water supply permitting process. A copy of the CDPH Policy Memorandum is provided in Appendix A.

This report is organized into eight sections. Section 1.0 includes this introduction. Section 2.0 provides the source water assessment (SWA). Section 3.0 is the full characterization of the raw water quality and Section 4.0 identifies existing source protection programs. Section 5.0 describes the effective monitoring and treatment. Section 6.0 estimates the risks associated with the failure of the treatment system and Section 7.0 identifies the alternatives and associated risks. Section 8.0 lists the references cited throughout the report.

1.1 Description of Source Water

The source water evaluated in this document is the groundwater contained within the capture zones of the production wells. These production wells are located in the Monk Hill Subarea of the Raymond Basin and downgradient of the JPL facility. Table 1-1 provides summary information for eight of the nine production wells based on well construction logs and well data sheets from the Drinking Water Source Assessment Protection (DWSAP) Program. Figures 1-2 through 1-7 are well construction diagrams or boring logs for each production well with the exception of LAWC #3 and #5 wells and Rubio Cañon Well #7. For the LAWC wells, construction details were obtained from DWSAP well data sheets because boring logs could not be located. Construction details for the Rubio Cañon Well #7 are unknown because boring logs, well schematics, or DWSAP well data sheets could not be located.

[1] As of July 1, 2007, the California Department of Health Services (DHS) became the California Department of Public Health.

1.2 Applicability of CDPH Policy Memorandum 97-005 to the Production Wells

CDPH considers the Monk Hill Subarea to be an extremely impaired source because, as described in Policy Memorandum 97-005, it contains a constituent that exceeds 10 times a maximum contaminant level (MCL) which was derived based on chronic health effects, it is in close proximity to a CERCLA site, and it contains a mixture of chemicals of health concern. The rationale for the identification of these criteria is provided as follows:

- The maximum detected perchlorate concentration of 160 µg/L from the Arroyo Well exceeds more than 10 times the current MCL of 6 µg/L for perchlorate; this MCL is based on chronic health hazards for noncarcinogenic effects.
- All of the production wells are located southeast of the JPL facility. This facility was placed on the United States Environmental Protection Agency (EPA) National Priorities List (NPL) in 1992. The groundwater extracted by the production wells is part of Operable Unit-3 (OU-3), off-facility groundwater.
- Carbon tetrachloride, trichloroethene (TCE), tetrachloroethene (PCE), 1,2,3-trichloropropane, (1,2,3-TCP), and perchlorate are the primary chemicals of potential health concern that have been detected in groundwater samples collected from the Monk Hill Subarea.

2.0 Source Water Assessment

Source water is defined as the groundwater contained within the capture zones of production wells. The purpose of this SWA is to evaluate the vulnerability of the groundwater extracted from the Monk Hill production wells to releases of chemicals in the subsurface environment. The SWA describes how the capture zones for the production wells were established and identifies known and potential chemical sources. Source identification was conducted in accordance with CDPH Policy Memorandum 97-005 by evaluating the following:

- The origin of identified chemicals in the groundwater and prediction of future chemical level trends;
- Chemicals used at or generated by facilities responsible for chemicals known to be in groundwater; and
- Other potential sources and determination of the vulnerability of the groundwater to these other sources.

2.1 Delineation of Source Water Capture Zones

The capture zones for the production wells encompass the areas within the aquifer that are hydraulically influenced when these production wells are in use. The capture zones are used to assess which portions of the aquifer (both laterally and vertically) contribute water extracted from the production wells.

Section 2.1.1 provides a description of the geology and hydrogeology within the capture zones, and Sections 2.1.2 and 2.1.3 describe the methodology and identification of the capture zones.

2.1.1 Geology and Hydrogeology

2.1.1.1 Geologic Setting

The San Gabriel Valley is divided into distinct groundwater basins. The Raymond Basin, where the production wells are located, is bordered on the north by the San Gabriel Mountains, on the west by the San Rafael Hills, and on the south and east by the Raymond Fault. The Raymond Basin is further divided into three subareas as shown on Figure 2-1: the Pasadena Subbasin, the Santa Anita Subbasin, and the Monk Hill Subarea. All nine production wells under discussion in this document are located in the Monk Hill Subarea, which provides potable groundwater for several communities in the area including Pasadena, La Cañada-Flintridge, and Altadena (Foster Wheeler Environmental Corporation [FWEC], 2000).

2.1.1.2 Hydrogeologic Setting

In the Raymond Basin, a confluence of groundwater flow regimes occurs within the Monk Hill Subarea. Within the western portion of the Monk Hill Subarea the groundwater flow is predominantly to the southeast, and at the eastern portion of the Monk Hill Subarea the groundwater flow is predominantly to the south. However, the presence and operation of groundwater recharge basins (spreading grounds) in the Arroyo Seco and municipal groundwater production wells locally influence groundwater flow directions.

The Monk Hill Subarea is generally considered to be an unconfined aquifer. However, vertical hydraulic head (water level) differences with depth are observed between well screens in deep multi-level monitoring wells located near the production wells. The head differences are caused by the presence of relatively thin, silt-rich layers located throughout the alluvial aquifer that inhibit vertical flow of groundwater (FWEC, 1999a). These data indicate that the aquifer does not exhibit unconfined conditions. Therefore, the aquifer can be divided into four groundwater modeling unit layers, based primarily on how these silt-rich intervals influence the hydraulic heads in the aquifer during pumping of the nearby municipal wells. Throughout this document, these layers are interchangeably referred to as modeling unit layers or aquifer layers. These layers are discussed in further detail in the following paragraphs and in subsequent sections.

A surface geologic map of the study area produced by the California Division of Mines and Geology and five geologic cross sections are provided in Figures 2-2 and 2-3. The cross sections were constructed by correlating lithologic logs, geophysical logs, and water-level and hydraulic-head data from the deep JPL multiport monitoring wells. The geologic formations and cross sections present within the study area are included in Figure 2-3.

The lithologic columns and geophysical logs depicted on the cross sections represent the boring logs and geophysical logs obtained during the Remedial Investigation (RI) for OU-1 and OU-3 (FWEC, 1999a). The correlation between wells was complicated by the variable nature of alluvial fan-type deposits present at JPL. Correlation between wells of generally similar lithologic sequences at similar depths was made whenever possible, as opposed to attempting to correlate individual sand and silt layers. Correlation between wells also was made between sections of the aquifer that had similar responses to pumping of nearby municipal production wells (similar amounts of drawdown). Historical hydrographs from JPL monitoring wells are included on the cross sections (Figure 2-3). The cross sections presented in Figure 2-3 do not include MW-3; therefore, two additional cross sections have been generated: Figure 2-4 shows the formations between wells MW-24 through MW-8, MW-3, Arroyo Well, MW-17, LAWC #3 and Figure 2-5 presents the wells located along the eastern side of JPL, from MW-21 through MW-5, MW-4, MW-12, 9, 15, and 1.

Four primary aquifer layers were delineated for the study area above the crystalline basement complex. The primary aquifer layers present in the study area were identified based on geologic formations published by the California Division of Mines and Geology and the United States Geological Survey (USGS). The four aquifer layers in the study area include the upper and lower sections of the Older Fanglomerate Series (Aquifer Layers 1 and 2, respectively), the Pacoima Formation (Aquifer Layer 3), and the Saugus Formation (Aquifer Layer 4). Although Layer 4 is part of the aquifer, it is not present beneath the area of interest and is therefore not discussed further in this report (NASA, 2004).

Groundwater elevation measurements have been recorded routinely to characterize aquifer conditions as part of the CERCLA program at JPL. Water-table elevations in JPL monitoring wells located at the mouth of the Arroyo Seco (MW-1, MW-9, and MW-15) have been consistently higher than water-table elevations in other JPL monitoring wells, indicating the presence of a significant groundwater mound. This mound is typically between 80 and 120 ft higher than the surrounding water table and is a result of recharge from the mouth of the Arroyo Seco, and possibly the presence of unmapped low-permeability physical barriers (FWEC, 1999a).

The groundwater surface has been measured in the JPL monitoring wells at depths ranging from approximately 22 to 270 ft below ground surface (bgs). This wide range of depths to groundwater can primarily be attributed to the relatively steep topography present in the area and local groundwater mounding at the mouth of the Arroyo Seco. It also can be attributed to seasonal groundwater recharge from nearby spreading grounds and the extraction of groundwater from nearby municipal production wells (FWEC, 2000).

2.1.1.3 Groundwater Flow Conditions

The groundwater flow conditions near the production wells are affected by various natural and anthropogenic influences that include the following: (1) pumping from other nearby municipal production wells, (2) groundwater recharge from Arroyo Seco spreading basins, (3) seasonal and regional groundwater recharge from precipitation, and (4) regional groundwater flow.

Potentiometric surface maps that represent groundwater flow conditions during operational and non-operational periods of nearby production wells (14 production wells and two aquifer storage and recovery wells) are shown in Figures 2-6 through 2-9. The September 1996 data are the most appropriate for the potentiometric surface maps associated with operational periods because more recent data do not exist since the Arroyo well was shut down in 1997 (Figure 2-6). Pumping rates for the production wells have been included on Figure 2-6. Please refer to the Groundwater Modeling Report (NASA, 2004) for specific detail regarding pumping rates and production well usage. More recent water level data (November 2006) were used to create potentiometric surface maps for Aquifer Layers 1, 2, and 3 for non-operational periods (Figures 2-7, 2-8, and 2-9, respectively). Historical groundwater elevations in Layers 1, 2, and 3 are illustrated in Figures 2-10, 2-11, and 2-12, respectively. These figures also show the correlation between changes in the groundwater elevations measured in multi-level monitoring wells during operational cycles of the nearby municipal production wells.

Groundwater flow in the capture zones is primarily to the southeast. However, changes in the groundwater flow direction may occur temporarily during periods of high recharge at the Arroyo Seco spreading basins (typically between the months of January and March), combined with the non-operation of City of Pasadena wells. During these times, the groundwater mound at the mouth of the Arroyo Seco apparently expands locally, changing the groundwater gradient to the west across parts of the area where the Arroyo Well and Well 52 capture zones are located. A study found that localized groundwater gradient (water-table) changes were observed each year with durations ranging from approximately 9 days to 16 weeks (FWEC, 1999a). These shallow aquifer gradient changes are localized and the duration of the changes primarily depends on pumping schedules of City of Pasadena wells, precipitation, and rates of groundwater recharge in the Arroyo Seco spreading basins (FWEC, 2000).

2.1.2 Delineation and Identification of Capture Zones

Delineation of the source water capture zones for the production wells was determined using a three-dimensional finite element groundwater flow model developed by NASA (2004). The groundwater model encompasses a 4,560-acre area that includes the Monk Hill portion of the Raymond Basin. The model consists of four elemental layers that are bounded by five nodal slices. The extent of the model domain and the calibrated material properties for each of the four layers is discussed in detail in the *JPL Groundwater Modeling Report* (NASA, 2004).

The capture zones for each production well were identified using a steady-state flow simulation to generate the groundwater flow fields. Forward and backward particle-tracking were used to assess the advective flow paths of the groundwater. After review of the particle-tracking results, capture zones were developed for the production wells. Because a significant vertical component to groundwater flow is present in the study area (particularly near the production wells and spreading basins), capture zones were developed for the different modeling unit layers represented in the model as Model Layers 1 through 4. The amount of time required to establish steady state capture zones depends on the location of the well in relation to the source area. Estimates for the time to establish steady state capture zones can range from 3 to 6 years for upgradient production wells (i.e., Arroyo, Well 52) to over 10 years for production wells that are further downgradient.

Extraction rates for the production wells were based on anticipated treatment system operation for the PWP wells (Arroyo, Well 52, Ventura, and Windsor) and pumping rate data from January 2000 through January 2003 obtained from the Raymond Basin Management Board (RBMB) Database (Geoscience, 2004). Because the system is not operating at this time, the assumptions made regarding pumping rates during system operation were developed to be consistent with discussions between NASA and the City of Pasadena. For the PWP wells, it is anticipated that one treatment system capable of treating 7,000 gallons per minute (gpm) will be installed. Operation of the system at 7,000 gpm will only occur for approximately 6 months per year, depending on the water demand and volume of water available for PWP to pump each year. The system will be idle and no pumping will occur from the production wells during the other 6 months each year. Table 2-1 summarizes the assumed extraction rates and months pumped for each of the production wells included in the capture zone analysis.

Because the capture zone analysis was conducted using a steady-state flow simulation, a time-weighted averaging approach was used to account for the different rates used throughout the months in the year. Time-weighted averages shown on Table 2-1 were derived by summing the products of the high average multiplied by number of months pumped and the low average multiplied by number of months pumped and then dividing by 12 months.

The composite capture zones also are based on these assumptions:

- Groundwater flow is steady-state based on average groundwater flow conditions from 1996 to 2000;
- All of the Monk Hill production wells are in use, including the Valley Water Company wells and La Cañada Irrigation District wells;
- The capture zone is a two-dimensional representation of a three-dimensional groundwater flow system in the study area.

The capture zone analysis is subject to uncertainties associated with the groundwater flow parameters as detailed in the *JPL Groundwater Modeling Report* (NASA, 2004).

The JPL groundwater flow model has been used to estimate travel times from the source area to downgradient production wells; however, at this time, the model is only capable of performing particle tracking, not contaminant transport. As a result, travel estimates represent flow under advective conditions and do not include transport properties such as sorption, decay, or dispersion. Particle tracking under historical conditions indicates that over 95% of the particles released at JPL will be captured by downgradient City of Pasadena production wells, primarily

the Arroyo well and Well 52. If these wells are not in operation, which reflects current conditions, particles released at JPL will be captured by the downgradient LAWC wells in roughly 10 to 12 years.

The capture zone areas for the Monk Hill production wells are depicted in Figures 2-13 through 2-16. Also depicted on Figures 2-13 through 2-16 is the zone of capture that results from the OU-1 on-facility treatment. The 250 gpm OU-1 treatment system is designed to treat VOCs and perchlorate using liquid-phase granular activated carbon (LGAC) and a fluidized bed reactor (FBR), and the treated water is reinjected into the subsurface (NASA, 2008) system (refer to Section 4.2.1 for progress of the OU-1 treatment system). As shown on Figures 2-13 through 2-16, the on-facility system is designed to capture a significant portion of the groundwater in the upper portions of the aquifer directly beneath JPL, the area with the highest chemical concentrations (i.e., source area).

2.2 Origin of Known Chemicals in the Source Water and Prediction of Concentration Trends

2.2.1 Jet Propulsion Laboratory Facility

JPL is located on a 176-acre site in the foothills of the San Gabriel Mountains at 4800 Oak Grove Drive, approximately 12 miles northeast of Los Angeles. JPL is located in Los Angeles County, connecting La Cañada-Flintridge and the City of Pasadena and bordered on the east by the unincorporated community of Altadena. Geographically, JPL is located at latitude 34.201°N and longitude 118.173°W (USGS topographic map, Pasadena quadrangle).

JPL is situated on a south-facing slope along the southern base of the east-west trending San Gabriel Mountains located on the northern edge of the Los Angeles metropolitan area. The Arroyo Seco, an intermittent streambed, lies immediately to the east and southeast of the site. Within the Arroyo Seco is a series of surface impoundments used to collect surface water runoff during the rainy season for groundwater recharge. Residential development, an equestrian club (Flintridge Riding Club), and a Los Angeles County Fire Department Station border the site along its western, southwestern, and southern boundaries, respectively. Residential development also is present to the east of the JPL facility, along the eastern edge of the Arroyo Seco.

Various chemicals and materials have been used during the operational history of the JPL facility. The general types of materials used and produced include a variety of solvents, solid and liquid rocket fuel propellants, cooling-tower chemicals, and analytical laboratory chemicals. Many buildings at JPL used seepage pits to dispose of liquid and solid materials via infiltration into surrounding soil. The RI for OU-2 identified 40 seepage pits, five waste pits, and four discharge points (see Figure 2-17) on the JPL facility that were used during historic operations, from 1945 to 1960, to dispose of liquid and solid waste, including chemical wastes (FWEC, 1999a). Some of these seepage pits may have received halogenated solvents, solid fuel residue containing perchlorate, and other chemicals that currently are found in the groundwater. According to information provided in the Expanded Site Inspection Report (Ebasco Environmental, 1990a), in the 1940s and 1950s nearly every building at JPL used a cesspool to dispose of sanitary liquid and solid wastes. These cesspools were designed to allow liquid

wastes to seep into the surrounding soil, and have apparently been referred to as seepage pits in the past. It is believed that the seepage pits were backfilled between 1960 and 1963, when JPL installed a sewer system (Agency for Toxic Substances and Disease Registry [ATSDR], 1999). Since there is very little undeveloped land on the facility grounds, these disposal areas are now located under buildings, retaining walls, parking lots, roads, and flower planters (ATSDR, 1999). JPL now transports all of its hazardous wastes off site for destruction, disposal, or recycling.

In 1988, as part of the CERCLA process, a preliminary assessment/site inspection (PA/SI) was completed for groundwater, indicating that further site characterization was necessary (Ebasco Environmental, 1988). In 1990, an expanded site inspection was performed in which several groundwater monitoring wells were installed (Ebasco Environmental, 1990b). VOCs subsequently were detected at concentrations above drinking water standards during the expanded site inspection. The site was then ranked in accordance with the Federal Hazard Ranking System (HRS) and subsequently placed on the EPA's NPL. As a result, a comprehensive RI of both the on-site soil contaminant source (OU-2) and groundwater (OU-1/OU-3) was initiated. Summaries of the soil and groundwater RI is provided below. For complete details of the RI investigations refer to the *Final Remedial Investigation Report for Operable Unit 2* (FWEC, 1999a) and *Final Remedial Investigation Report for Operable Units1 and 3* (FWEC, 1999b). At the request of the U.S. EPA, a long-term quarterly groundwater monitoring program was initiated by NASA in August 1996. The analytical parameter list for the long-term quarterly monitoring program was derived based on findings of the OU-1/OU-2 RI, which included regulatory agency approval to eliminate particular analytical parameters from the RI sampling program (as identified in Section 2.2.1.2). A detailed discussion of the data collected during the long-term groundwater monitoring program at JPL is presented in Section 2.2.1.3.

2.2.1.1 Remedial Investigation for Soil

Prior to beginning the OU-2 RI, excavation and removal of contaminated soil had already occurred in 1990 and 1991 as a result of encountering contaminated soil during on-site reconstruction. Details of preliminary investigations and/or activities leading up to the RI are summarized in the OU-2 RI (FWEC, 1999a) as are the specifics regarding the excavation and removal of contaminated soil. In summary, approximately 160 cubic yards of soil containing elevated levels of carbon tetrachloride were excavated from a large catch basin area in December 1990 near Building 107 (located to the west of MW-1). Similarly, while excavating for the foundation of Building 306 (located just to the northwest of MW-4), contaminated soil containing elevated levels of total recoverable petroleum hydrocarbons was discovered. Between November 1991 and January 1992, approximately 16,130 tons of contaminated soil was excavated and disposed off site.

Potential source contaminant areas were investigated during the OU-2 RI from 1994 to 1998 during nine sampling events in which either soil or soil-vapor samples were collected from suspected source locations. Soil and soil-vapor samples were collected in an attempt to characterize potential on-site contaminant releases that may have occurred at identified seepage pits/dry wells, waste pits, and discharge points at the JPL facility. The field activities for the OU-2 RI were designed to assess the nature and extent of the constituents of concern in the vadose zone (soil and soil vapor) beneath JPL.

Soil samples collected during the OU-2 field program were analyzed for semi-volatile organic compounds (SVOCs), California Title 26 metals plus strontium and hexavalent chromium, total petroleum hydrocarbons (TPH), cyanide, dioxins, furans, polynuclear aromatic hydrocarbons (PAHs), polychlorinated biphenyls (PCBs), tributyltin, and nitrate. Only samples from the test pits were also analyzed for VOCs. All soil-vapor samples were analyzed for VOCs only. Chemicals detected in soil vapor and soil during the OU-2 RI are listed on Table 2-2. Figure 2-18 shows the chemicals and concentrations detected in soil.

Results from the soil vapor sampling program indicated that VOCs are present in the soil vapor beneath JPL. The data indicated that chlorinated aliphatic compounds and chlorofluorocarbons are the main compounds of potential concern. Four compounds, carbon tetrachloride, TCE, l,l-2-trichloro-1,2,2-trifluoroethane (Freon 113), and 1,1-dichloroethene (1,1-DCE) were consistently detected at elevated concentrations. Of these, carbon tetrachloride was the most frequently detected compound. The majority of VOC contamination was observed beneath the central and eastern portions of the site, at depths ranging from 20 feet below grade down to groundwater. In most locations where VOCs were detected, VOC concentrations generally increased with increasing depth. Overall, the largest portion of the contamination appeared to be related to the seepage pits, waste pits, and disposal areas identified in earlier investigations. Based on the results of the RI, which indicated the presence of VOCs in soil, soil vapor extraction (SVE) pilot testing was initiated in 1998 to remove VOCs from the vadose zone. Based on the successful pilot test, SVE was selected as the remedial alternative. The selected remedy for OU-2 considered the soil-to-groundwater migration pathway and provided for cleanup of the vadose zone to be protective of beneficial uses of groundwater. VOC mass removal rates by the SVE system and VOC concentrations in soil vapor decreased dramatically during the eight years of operations. The SVE system removed approximately 260 pounds of VOCs from the vadose zone soil. Residual, low level VOCs that remain in soil and soil vapor can be most effectively managed through the groundwater response actions in OU-1 and OU-3. For additional information on the remedial action at OU-2 refer to the *Final Remedial Action Report for Operable Unit 2* (NASA, 2007a).

Results from soil samples also revealed the presence of a number of analytes that do not occur naturally in soil, including SVOCs, PAHs, PCBs, dioxin, cyanide, hexavalent chromium, tributyltin, and TPH. These compounds were generally detected in areas potentially associated with past waste disposal activities. Furthermore, naturally-occurring compounds or elements detected included nitrate and arsenic. Only four SVOCs (excluding PAHs) were detected in JPL soils, including di-n-butylphthalate, butylbenzylphthalate, bis(2-ethylhexyl)phthalate, and n-nitroso-di-n-proylamine (NDPA). These compounds were mainly detected in near-surface soil samples, except for NDPA which was detected at 30 ft bgs and bis(2-ethylhexyl)phthalate which was detected in seven soil borings (mostly at depths greater than 30 feet). PAHs were found in the soil borings and test pits that were potentially associated with previous waste disposal activities along the southeastern portion of the site. The compounds detected included benzo(b)fluoranthene, benzo(a)pyrene, benzo(g,h,i)perylene, fluoranthene, indeno(1,2,3-cd)pyrene, phenanthrene, pyrene, chrysene, and benzo(a)anthracene. PCBs, Aroclor-1254 and Aroclor-1260, were only detected in one test pit (at depths of 1 and 5 feet, respectively), and Aroclor-1232 was detected in one test pit at a depth of 5 feet. TPHs, believed to have originated as lubricating or mineral oils, were detected in 13 soil borings. A dioxin congener (1,2,3,4,6,7,8,9-OCDD) was detected twice from a depth of 1 foot in two test pit soil samples.

All elements included in the Title 26 metals suite (plus strontium and hexavalent chromium)

were detected in JPL soils with the exception of selenium. Where detected, metal concentrations typically fell within the range of levels measured in the background samples of JPL soils. Arsenic was detected in several locations within the range of concentrations commonly observed in California soils. Hexavalent chromium, which is generally not considered to occur naturally, was also detected in one soil boring and in three test pits. Nitrate, which is believed to have originated from agricultural and landscaping fertilizers, equestrian activities, irrigation waters, and cesspools, was detected in many of the soil borings. Cyanide was detected in samples from only one boring, and tributyltin was detected (at the detection limit of 1 µg/kg) in one test pit. Furans were not detected in any of the soil samples collected at JPL during the OU-2 RI field program.

Additional discussion of the potential for PAHs, PCBs, and other SVOCs present in soil to be present in groundwater is provided in Section 2.4.3.

2.2.1.2 Remedial Investigation for Groundwater

Groundwater beneath and downgradient of the JPL facility was investigated as part of the OU-1/OU-3 RI, beginning in June 1994 through February 1998. A summary of the sampling and analyses associated with the RI is provided here followed by the general conclusions of the RI. A summary of the chemicals detected during the groundwater RI is provided in Table 2-3. Refer to the OU-1/OU-3 RI (FWEC, 1999b) for detailed sampling and analytical results.

Eighteen wells were installed for OU-1 (MW-1, MW-3 through MW-16, MW-22, MW-23, and MW-24) and another five were installed for OU-3 (MW-17, -18, -19, -20, and -21) (refer to Figure 1-1 for well locations). Of the total 23 wells, 10 wells are shallow standpipe wells that have a single screened interval at the groundwater table (e.g., MW-6). The other 13 wells are deep, multi-port wells that contain five screened intervals, each positioned at various depths of the aquifer (e.g., MW-24-3 refers to monitoring well 24 – screen 3). All five of the wells located off site (OU-3) are deep multi-port wells. Over the course of the OU-1/OU-3 RI, groundwater samples were collected from the JPL monitoring wells a total of 10 times between June 1994 and January 1998. Samples collected during the RI were analyzed for VOCs, SVOCs, Title 26 metals, strontium, hexavalent chromium, aluminum, cyanide, TPH (MW-4 only), gross alpha/gross beta (MW-13 only), perchlorate, tributyltin (select wells), and general minerals (major anions and cations).

Several chlorinated VOCs were frequently detected in the groundwater (chloroform, carbon tetrachloride, TCE, Freon 113, PCE, 1,1-DCA, and bromodichloromethane). All of the VOCs that were detected in the soil vapor samples and the soil samples also were detected in groundwater. In addition to VOCs, other compounds detected included perchlorate, SVOCs, pesticides, inorganics, and radionuclides. As shown in Table 2-3, two pesticides, atrazine and simazine, were detected in groundwater. These chemicals were detected sporadically in off-site wells (MW-17, -18, 19, -20, and -21) at concentrations ranging from 0.05 to 0.3 µg/L.

Analyses for perchlorate were performed during the June/July 1997, September/October 1997, and January/February 1998 sampling events following a request from the CDPH. Results of these analyses indicated that perchlorate was present in on-site and off-site wells, as well as in downgradient municipal production wells. SVOC analyses were conducted during the June/July 1994 and the November/December 1994 sampling events for the OU-1 on-site wells,

and the July/August 1995 and December/January 1995-1996 sampling events for the OU-3 off-site wells. Phthalates and PAHs were the only types of SVOCs detected. Two phthalates, bis(2-ethylhexyl)phthalate (at 0.6 to 4.2 µg/L) and di-n-butylphthalate (at 0.5 to 21 µg/L) , were detected at low sampling frequencies (10% and 6%), respectively. According to the RI, because these two compounds are common laboratory contaminants and were detected in several laboratory blanks, they were excluded from subsequent sampling events with the approval of the regulating agencies.

PAHs were detected only in one on-site well (MW-12-2) in June/July 1994. A duplicate sample from MW-12-2 also was collected and analyzed during the June/July 1994 event, and no PAHs were detected. In addition, no PAHs were detected in MW-12-2 during the subsequent November/December 1994 event. Thus, evidence suggested that the initial detects were anomalous. To further investigate, an additional sample and duplicate sample from MW-12-2 was analyzed for PAHs that had been previously detected during the August/September 1996 event, and again, no PAHs were detected. It was therefore concluded that the initial detects were anomalous. Based on the results of these initial sampling events, and with the approval of the regulating agencies, SVOCs were excluded from the sampling program for subsequent events. Additional discussion of the potential for PAHs, phthalates, and other SVOCs to be present in groundwater is provided in Section 2.4.3.

During the first two RI sampling events for OU-1 (June/July 1994 and November/December 1994) and OU-3 (July/August 1995 and December/January 1995-1996) groundwater samples were analyzed for Title 26 metals plus strontium and cyanide. Aluminum analysis was also carried out during the second of the first two events for OU-1, during both of the first two OU-3 events, and again in August/September 1996. As stated in the OU-1/OU-2 RI (FWEC, 1999b), based on the results of these analyses and a risk assessment screening that was conducted, all metals and cyanide were eliminated from further analysis, with regulatory agency approval, except arsenic, lead, and chromium (analyses for both total and hexavalent chromium were retained). The majority of metals were eliminated from the sampling program because they were either not detected or were present at such low levels, well below regulatory limits, that they were not considered a concern. Results of the additional analyses for lead, arsenic and chromium are summarized below:

<u>Lead</u>

Results of lead analysis performed on samples from on- and off-site wells during the RI indicated that lead was detected sporadically and infrequently at levels well below the state and Federal action level. The OU-1/OU-2 RI (FWEC, 1999b) states that lead is a common natural constituent of soils and has been detected in California soils at concentrations ranging as high as 97 mg/kg and in JPL background soil samples collected during the OU-2 RI at levels up to 6.2 mg/kg. The data suggested that, with the random, scattered locations of detects, the very low frequency of detections, the low concentrations detected, and the natural occurrence of lead in JPL soils, the lead detected in the JPL groundwater is naturally occurring. The data do not suggest a lead plume exists at JPL.

<u>Arsenic</u>

During the RI program, on- and off-site groundwater samples were analyzed for arsenic over 500 times, and arsenic was detected only 12 times at very low levels, well below state and Federal MCLs. When detected, arsenic was detected in the lower screens of the

multi-port wells. Arsenic was detected at very low levels in seven of eight samples from MW-3-5, in two of eight samples from MW-11-5, in one of eight samples from MW-18-4, in one of eight samples from MW-20-5, and in one of two samples from MW-24-3. Arsenic only was consistently detected in the deepest screen of MW-3. There is no correlation between the arsenic in these wells, and no evidence of an arsenic plume. The OU-1/OU-3 RI describes arsenic as another common constituent of soil that is found naturally in California soils at concentrations ranging as high as 11 mg/kg. Background arsenic soil levels measured at JPL during the OU-2 RI ranged up to 2.8 mg/kg. Similar to lead, the general low frequency of detections, the low concentrations detected, and the natural occurrence of arsenic in JPL soils suggest the arsenic detected in the groundwater is naturally occurring.

Chromium

Total chromium was detected mostly at levels below MCLs, with the exception of one sample from MW-6 and one sample from MW-13 at the state MCL of 0.05 mg/L. Results of the last RI round of sampling indicated that only wells MW-7 and MW-13 had detectable concentrations, while for the remaining wells total chromium was below practical quantitation limits. Chromium occurs naturally in various geologic materials, and consequently low levels in groundwater are not uncommon, depending on soil levels in the surrounding watershed. As stated in the OU-1/OU-3 RI, typical background chromium concentrations in California soils range as high as 99 mg/kg, and lower levels (up to 12.4 mg/kg) of chromium have been detected in JPL background soil samples, as well as virtually all JPL soil samples analyzed for the OU-2 RI. Hexavalent chromium was detected frequently in MW-7 and MW-13, and during one event, at very low levels, in three other wells. Concentrations of hexavalent chromium were constant in MW-7 and MW-13, but its absence in nearby, downgradient wells suggested minimal migration. Total chromium was detected once in one off-site well, MW-18-3, in February/March 1997 at a concentration of 0.015 mg/L, which was well below its state and Federal MCLs. Hexavalent chromium was detected two times off-site, once in MW-17-3 in September/October 1997 (0.006 mg/L), and once in MW-18-3 in February/March 1997 (0.007 mg/L). Numerous non-detects in monitoring wells between on-site wells MW-7 and MW-13, and off-site wells MW-17 and MW-18 suggest there is no strong direct connection between the on- and off-site chromium and that no extensive chromium plume exists.

Results for other chemicals detected during the OU-1/OU-3 RI, but determined by the regulators not to be a concern and subsequently dropped from the monitoring program are summarized below.

Tributyltin

Analyses for tributyltin were performed on samples from select wells during five RI sampling events at the request of the Department of Toxic Substances Control (DTSC). Tributyltin has historically been used by industry in cooling towers as an anti-bacterial agent. Since cooling towers have, and still are, being used at JPL, tributyltin analyses were performed. The wells to be sampled and the number of samples to be collected were recommended and agreed upon by the regulatory agencies (CDPH, and the Regional Water Quality Control Board, Los Angeles Region [RWQCB]) prior to sampling. Wells sampled included MW-4-1 and 2, MW-8, MW-12-1 and 2, and MW-13. Tributyltin

was detected in one sample from MW-4-2 during the June/July 1997 event, and in MW-12-1 during the August/September 1996 and June/July 1997 events at very low levels (not greater than 0.005 µg/L). Analysis for tributyltin was subsequently discontinued after the September/October 1997 event, pursuant to approval from the EPA, DTSC, and RWQCB.

Gross Alpha/Gross Beta

To evaluate whether above normal levels of radioactivity were in the groundwater, samples from JPL monitoring well MW-13, located near Building 67 (a former location for radioactivity use), were analyzed for gross alpha and gross beta during the first two RI sampling events (June/July 1994 and November/December 1994). All results were below MCLs established for gross alpha (15 pCi/L) and gross beta (50 pCi/L). In addition, during the pre-RI groundwater sampling program completed at JPL between 1990 and 1993 gross alpha and gross beta were analyzed in samples from all monitoring wells present at the time (MW-1 through MW-7). Results from all wells, including upgradient wells MW-1 and MW-6, for both gross alpha and gross beta were also below established MCLs. It was determined that gross alpha and gross beta results obtained from well MW-13 during the RI are comparable to gross alpha and gross beta results obtained previously from upgradient sampling points (MW-1 and MW-6).

Fluoride

Fluoride was detected consistently throughout the study area in very low levels below state and Federal MCLs. Fluoride occurs naturally in groundwater as the result of weathering of such minerals as fluorite, apatite and hornblende commonly found in a wide variety of geologic terrains. The widespread occurrence of low levels of fluoride throughout the study area suggested its presence is due to natural weathering processes. Fluoride detected in on-site wells is similar to, or typically lower, than that detected in JPL upgradient monitoring well MW-1. The lack of a fluoride "plume" in the study area also suggested that the somewhat elevated levels detected in MW-3-5 are the result of natural conditions. It is interesting to note that the location where slightly elevated concentrations of fluoride were consistently detected (MW-3-5) is also the location where arsenic has consistently been detected. Based on the fluoride data, analyses for fluoride were discontinued after the December/January 1995/1996 event after approval from the EPA, DTSC, and the RWQCB.

Total Petroleum Hydrocarbons

In 1991, during excavation activities for the foundation of JPL Building 306, a layer of soil was encountered that appeared to be impacted with petroleum hydrocarbons. Soil samples were collected and indicated the presence of TPH up to 5,500 mg/kg at an average depth of 5 feet bgs. Approximately 19,000 tons of soil were subsequently excavated and properly disposed off-site. To evaluate whether TPH was detectable in the groundwater, groundwater samples from all five screens from MW-4, located immediately downgradient from Building 306, were analyzed for TPH during the first two RI sampling events (June 1994 and November 1994). TPH was not detected in well MW-4 during either sampling event. It was subsequently dropped as a constituent of concern pursuant to regulatory agency approval.

In general, the RI concluded that carbon tetrachloride, TCE, 1,2-dichloroethane (DCA), and perchlorate were detected at concentrations exceeding state and Federal MCLs. Based on the

analytical data, elevated VOCs and perchlorate concentrations were primarily found in monitoring wells located on site (MW-7, MW-13, MW-16, and MW-24) and to the east of JPL around the Pasadena and Lincoln Avenue municipal production wells (MW-17, MW-18, and MW-19).

In 2004, an additional investigation was undertaken to delineate the leading edge of the perchlorate plume originating from the JPL facility and to improve the understanding of the relationship between water quality and perchlorate concentrations near the Sunset Reservoir (NASA, 2004; NASA, 2007b). The additional investigation included installation of two multi-port monitoring wells, MW-25 and MW-26 (locations shown on Figure 1-1), and collection of monitoring data from these wells. Concentrations of perchlorate have been detected above its MCL in MW-25, but have not been detected above its MCL in MW-26. These wells are currently sampled as part of the JPL monitoring network, which is discussed in Section 2.2.1.3.

2.2.1.3 Long-Term Groundwater Monitoring Program

The long-term groundwater monitoring program at JPL began in June 1996 during the OU-1/OU-3 RI and continues today. Quarterly and annual groundwater monitoring reports dating back to August 1996 up until the present are available on the NASA CERCLA Program Web site (http://jplwater.nasa.gov/NMOWeb/). These reports contain summaries of chemical concentrations in groundwater from the JPL monitoring wells. Throughout this period, the analytical parameters and frequency of sampling for each well has varied based on results of previous sampling events, especially those included as part of the OU-1/OU-3 RI as discussed in Section 2.2.1.2. Based on the results of the RI, the long-term monitoring program included analyses for VOCs (carbon tetrachloride, TCE, PCE, and 1,2-DCA in particular because these chemicals were previously detected at concentrations exceeding state or federal MCLs), perchlorate, select metals (chromium [total and hexavalent], arsenic, and lead), nitrate and nitrite, and Title 22 general minerals on a quarterly, semiannual, or annual basis.

Additionally, analyses for certain compounds (e.g., 1,2,3-trichloropropane [1,2,3-TCP], 1,4-dioxane, n-nitrosodimethylamine [NDMA]) have been included in quarterly sampling events at various times to address requests from the CDPH based on the ubiquitous presence of these compounds in groundwater in areas near JPL. Concentrations of 1,2,3-TCP have been detected in perimeter and off-site wells/screens MW-12-3, -4, and -5; MW-18-3, -4; and all screens at MW-25, with concentrations ranging from 0.01 to 0.8 µg/L. The highest 1,2,3-TCP concentration (0.8 µg/L) was detected in MW-24-3 in May 2002 (1,2,3-TCP has not been detected since this time in MW-24-3). Concentrations of 1,4-dioxane and NDMA are primarily limited to source area wells (MW-13, MW-16, and MW-7) and two off-site wells (MW-3 and MW-17).

A comprehensive groundwater monitoring event (CGWME) was conducted by NASA in December 2002 and January 2003 for select JPL monitoring wells to provide supplemental water quality data based on the analyses required in CDPH Policy Memorandum 97-005. Requirements in CDPH Policy Memorandum 97-005 must be met for the Monk Hill treatment system, as part of the domestic water supply permitting process, because the source water from the drinking water production wells meets the criteria of an "extremely impaired source" as defined in this Policy Memorandum. A *Draft Sampling and Analysis Plan (SAP), Comprehensive Groundwater Monitoring Event for CDPH Policy Memo 97-005 Permit Application* (CH2M Hill, 2002) was prepared to support the field and laboratory activities associated with this sampling event.

The JPL monitoring wells and multi-level well screens selected for the comprehensive groundwater monitoring event included: MW-3-3, MW-3-5, MW-4-1, MW-4-2, MW-4-5, MW-7, MW-8, MW-10, MW-12-3, MW-12-5, MW-14-2, MW-14-4, MW-16, MW-17-3, MW-17-4, MW-18-3, MW-18-4, MW-19-3, MW-19-5, MW-21-3, MW-21-5, MW-24-2. CDPH participated in the selection of the wells and analytical methods, and in November 2002 approved all of the analyses contained on Table 2-4. Details regarding the specific analytical results obtained during the comprehensive monitoring event are provided in Appendix B; however, for purposes of this source water assessment, the results from the comprehensive groundwater monitoring event (CGWME) have been included with the long-term monitoring data.

During the fourth quarter of 2006, additional analytes were included as part of the groundwater monitoring program at JPL to gain a better understanding of all chemicals present in groundwater that may potentially impact the design and/or operation of the City of Pasadena centralized treatment system. Accordingly, these additional analytes were only monitored in wells located within the capture zone of the City of Pasadena production wells, which included all well screens for MW-3, MW-4, MW-5, MW-10, MW-17, MW-18, and MW-19. These additional analytes included a full suite of explosives, nitrosamine compounds, 1,4-dioxane, 1,2,3-TCP, tributyltin (analyzed as total dissolved tin), 1,2-dibromoethane (EDB), and 1,2-dibromo-3-chloropropane (DBCP). Silica was also analyzed as a geochemical parameter that is required for system design purposes (for details regarding sampling and analyses for these additional analytes please refer to the *Technical Memorandum for 2006 Groundwater Monitoring Summary* [Battelle, 2007]).

A summary of the chemicals analyzed in groundwater samples collected from the JPL monitoring well network beginning where the OU-1/OU-3 RI ended (i.e., April/May 1998) through October/November 2006, including the results of the CGWME and the additional analytes collected during fourth quarter 2006 is provided in Table 2-5. A total of 385 parameters (including water quality and chemical parameters) have been analyzed for in JPL wells (Table 2-5). Of the 360 chemical parameters analyzed for, only 84 analytes were detected at least once. Therefore, 276 chemicals have been analyzed for but have not been detected.

Some of the chemicals detected are naturally occurring, including metals (aluminum, arsenic, barium, boron, calcium, chromium, iron, lead, magnesium, mercury, nickel, potassium, selenium, sodium, thallium, vanadium, and zinc) and radiological parameters (gross alpha, gross beta).

Chemical constituents detected in the CGWME and more recent quarterly sampling events that were not detected (or not analyzed for) in the historical JPL monitoring data include 2,4,6-trinitrotoluene (TNT), high-velocity military explosive (HMX); royal demolition explosive (RDX); nitrobenzene, *n*-nitrosodiphenyl-amine (NDPHA); NDPA, NDMA, n-nitrosodiethylamine (NDEA), n-nitrosodi-n-butylamine (NDBA); n-nitrosopiperidine (NPIP); total petroleum hydrocarbons quantified as diesel (TPH-D); TPH-motor oil (TPH-MO); beryllium; boron; bromide; cobalt; manganese; propachlor; silver; and vanadium.

2.2.1.4 Concentration Trends

Concentration trends for the perchlorate and the specific VOCs are provided here because they have been identified as site-related constituents for JPL that also have been detected in production wells downgradient of JPL. In addition, nitrate concentrations over time have been

plotted for select JPL wells located near or downgradient of the various production wells. A technical memorandum was developed in 2005 that discusses the nitrate trends and the impact to the production wells. The technical memorandum has been included as Appendix C so that the results of the nitrate assessment can be reviewed. Trends in JPL wells can be used to estimate future trends in areas downgradient of these wells.

Concentration trends are provided in Figures 2-19 through 2-24 for monitoring wells MW-3, MW-4, MW-10, MW-17, MW-18, and MW-19. This group of wells consists of both perimeter off-facility wells and off-facility wells, which were selected based on their location within the capture zone of the four Monk Hill wells (Arroyo, Well 52, Ventura, and Windsor).

As shown on the concentration trends, historically high concentrations of perchlorate (13,000 µg/L) and carbon tetrachloride (300 µg/L) have been detected in the north-central portion of the JPL property. However, the effect of the OU-1 treatment system is observable, as is the trend that the concentrations have gone down with increasing distance from that portion of the property to the border monitoring and downgradient production wells. Carbon tetrachloride has not typically been detected in wells upgradient to the JPL site nor in wells sufficiently south of JPL, although these wells routinely have detections of perchlorate and PCE.

MW-3

VOCs have not been detected in well screens 1, 4, and 5, and perchlorate has not been detected in screens 1 and 4 (Figure 2-19). Perchlorate concentrations have been below the MCL in screens 1, 3, 4, and 5 since 2003; however, concentrations in screen 2 started to increase around this time and began exceeding the MCL mid-year 2003. The maximum concentration of perchlorate detected to date is 270 µg/L. An increasing perchlorate trend is obvious for screen 2. Concentrations of TCE and PCE continue to remain below their respective MCLs in all screens; however, TCE concentrations in screen 2 have increased since 2002. Carbon tetrachloride concentrations in screens 1, 3, 4, and 5 have been below the MCL since 2002, but continue to fluctuate above the MCL in screen 2.

MW-4

VOC concentrations in all screens have been below their respective MCLs since 2002 (Figure 2-20). Concentrations of TCE, carbon tetrachloride, and perchlorate have generally decreased over time in Screen 2 (Layer 2 in the aquifer) of MW-4, whereas PCE concentrations have increased (but still remained below the California MCL [Figure 2-19]), but for the last four years have been below detection limits. Perchlorate concentrations in all screens had been nondetect or below the MCL since 2003, but was suddenly detected at concentrations much higher than the MCL (~300 µg/L) beginning at the end of 2006 until 2009. A maximum perchlorate concentration of 800 µg/L was observed in 2007, possibly the result of the effects of the OU-1 groundwater treatment system.

MW-10

MW-10 is a single screened well (Figure 2-21). Several spikes in concentrations of perchlorate and carbon tetrachloride were observed in 2000/2001 but, since that time, concentrations have markedly decreased and remain consistently around their respective MCLs. TCE showed an increasing trend until 2007, at which time

concentrations dropped below the MCL. Concentrations of PCE appear to fluctuate near the detection limit, but remain below the MCL.

MW-17

Concentration trends for MW-17 are provided on Figure 2-22. After an initial perchlorate spike (over 1200 µg/L) in screen 1 in 1998, perchlorate concentrations in all screens except screen 3 have been nondetect or below the MCL. Perchlorate concentrations in screen 3 initially were nondetect when monitoring began but reached a maximum concentration in 2003 (200 µg/L) and then subsequently began a steady decline. Concentrations of TCE and carbon tetrachloride have decreased over time. TCE concentrations have been below the MCL since 2004 and carbon tetrachloride concentrations in all but screen 3 have consistently been at the detection level. Carbon tetrachloride concentrations in screen 3 have shown a steady decline since 2005. Concentrations of PCE have been below the MCL and near the level of detection since monitoring began; however, PCE concentrations in screen 2 have been slowly increasing since 2006.

MW-18

Perchlorate and VOC concentrations for well screens 1, 2, and 5 have consistently been near the detection level and below the MCLs (Figure 2-23). Perchlorate and carbon tetrachloride concentrations in screen 3 were initially nondetect, began increasing in 2004, and now show an increasing trend. Concentrations of perchlorate and carbon tetrachloride in screen 4 exhibited a decreasing trend in the early years of the monitoring program, but since 2004/2005 began to exhibit an increasing trend. PCE and TCE in all screens have fluctuated over time, especially in screen 4, but have remained below their MCLs since 2003. Overall, an increasing trend is observable in screens 3 and 4 for perchlorate, carbon tetrachloride, and TCE.

MW-19

Concentration trends for MW-19 are shown on Figure 2-24. Perchlorate concentrations in screens 2 and 3 have fluctuated over time, exceeding the MCL sporadically since 2004; however, concentrations have been below the MCL for the last four sampling events. Perchlorate concentrations in screens 1, 4, and 5 had consistently been nondetect up until early 2008. Concentrations of perchlorate in screens 1, 4, and 5 are steadily increasing, with concentrations in screen 1 above the MCL. Concentrations of carbon tetrachloride and TCE have remained below their MCLs; however, TCE concentrations in screen 2 are exhibiting a steady increase. Concentrations of PCE in all screens exhibit a decreasing trend, and as of 2005 are all below the MCL.

Because of individual well characteristics, it may appear that certain contaminants exhibiting concentration increases would adversely impact future concentrations of groundwater in downgradient wells. Therefore, to better characterize groundwater conditions beneath JPL, data from the groundwater monitoring wells were grouped according to location and magnitude of concentrations detected:

- Group A contains the wells located in the central portion of JPL, and have the highest concentrations (MW-7, MW-13, MW-16, and MW-24).

- Group B wells are located on site and have moderate to low concentrations (MW-6, MW-8, MW-11, MW-22, and MW-23).
- Group C wells are perimeter wells and have varying concentrations (MW-1, MW-2, MW-3, MW-4, MW-5, MW-9, MW-10, MW-12, MW-14, and MW-15).
- Group D wells are located off site, near production wells and tend to have varying concentrations (MW-17, MW-18, MW-19, MW-20, MW-21, MW-25, MW-26).

Figure 2-25 provides the average annual concentration trends for four chemicals frequently detected in groundwater in JPL monitoring wells located within each well group. Average annual concentrations shown on these figures were derived by averaging concentrations for each of the four chemicals across wells/well screens within each well group for each year since long-term groundwater monitoring began at JPL.

Group A Monitoring Wells

As shown on Figure 2-25, average concentrations of carbon tetrachloride and TCE are decreasing over time and have been less than 5 µg/L since 2005. Average concentrations of PCE were below 1 µg/L and steady until 2001, after which they increased and fluctuated between 1 µg/L and 4 µg/L; however, since 2001, PCE concentrations are back below 1 µg/L. Average concentrations of perchlorate exhibited an increasing trend until 2005 at which time concentrations decreased to levels at or below the MCL.

Historically high concentrations of perchlorate (13,000 parts per billion [ppb]) and carbon tetrachloride (200 ppb) were present in the north-central portion of the JPL property (around MW-7). However, an expanded treatability study (which was initiated in 2005 to support development of a full-scale remedial action to address VOCs and perchlorate in on-facility groundwater [OU-1] [additional discussion of the OU-1 source area treatment is provided later in Section 4.2.1]) has been effective in decreasing source area concentrations in the north-central portion of JPL. This is the reason concentrations of perchlorate and VOCs exhibit decreasing trends after 2005. The effect of the OU-1 treatment is also observed via the decreasing concentrations in wells located further away from the north-central portion of the property to the border monitoring and downgradient production wells (i.e., well groups B, C, and D on Figure 2-25). Note that carbon tetrachloride has not typically been detected in wells upgradient to the JPL site nor in wells sufficiently south of JPL, although these wells routinely have detections of perchlorate and tetrachloroethylene.

Group B Monitoring Wells

As shown on Figure 2-25, average annual concentrations for Group B wells are much less than those for Group A wells. Average annual concentrations of the VOCs and perchlorate have significantly decreased since 2000 and continue to decrease over time.

Group C Monitoring Wells

As shown on Figure 2-25, average annual concentrations tend to be slightly higher than those in Group B wells. Average concentrations of perchlorate and carbon tetrachloride demonstrated a sharp decrease in 2001 and have continued to decrease since that time. Concentrations of TCE demonstrated a sharp decline in 1998, began a steady increase, and continue to remain around 1 µg/L (concentrations are still less than the MCL). PCE average concentrations have remained relatively consistent over time and continue to be less than 0.5 µg/L.

Group D Monitoring Wells

Average annual concentrations for monitoring wells in Group D are shown on Figure 2-25. Average concentrations for the VOCs and perchlorate fluctuated for the first seven years, exhibited a decreasing trend from 2003 until 2005, at which time concentrations began to slowly increase again; however, concentrations from more recent sampling events are much lower than when the long-term monitoring began.

When wells are grouped and evaluated based on location with respect to the source area, as they were for Groups A through D, concentration trends show that, in general, concentrations are decreasing over time, primarily the result of the OU-1 source area treatment. Therefore, it can be expected that future concentrations will continue to decrease, especially as the OU-1 treatability study continues to expand and operate.

Emerging Constituents

Concentration trends for the emerging chemical constituents that were originally analyzed for and detected during the CGWME (e.g., 1,2,3-TCP, 1,4-dioxane, explosives, nitrosamines) are not as well defined as VOCs and perchlorate because an extensive dataset does not exist for these compounds. Table 2-6 presents a summary of the data and each of the constituents is discussed below.

Explosives

Explosive constituents, including 2,4,6-TNT, HMX, and RDX, were detected in various wells (MW-3-3, MW-4-1, MW-4-2, MW-12-3, MW-12-5, and MW-16) during the CGWME (Table 2-6). A full suite of explosives were analyzed by EPA Method 8330 during the fourth quarter groundwater sampling event. Excluding duplicate samples, 364 analyses were performed for explosives and, of these, only three detections were realized. HMX and nitrobenzene were the only two explosives detected. HMX was detected below its notification level (NL) and a NL has not been established for nitrobenzene. For fourth quarter 2006, explosive constituents were detected in two of the same wells as historical detections (MW-3 and MW-4), but in both cases explosive constituents were detected in deeper screens. MW-12 also showed detections during the CGWME, but was not sampled for explosives in November 2006. During the CGWME, upgradient wells demonstrated no detections of explosive compounds. The fourth quarter 2006 results indicate that detectable concentrations of explosive constituents are sparse within the capture zone of the City of Pasadena production wells, specifically, detections were only observed within the capture zones of Well 52 and the Arroyo Well.

Nitrosamines

Nitrosamine compounds had not been included as a monitored parameter until the CGWME. Three nitrosamine compounds (NDPA, NDMA, and NDPHA) were analyzed for and detected during the CGWME (Table 2-6). However, NDPA was the only constituent detected above the NL of 0.01 µg/L in MW-3-5 at a concentration of 0.125 µg/L. A full suite of nitrosamine compounds were analyzed by EPA Method 521. Excluding duplicate samples, 216 analyses were performed for nitrosamines and, of these, only 10 detections were realized. In all, five nitrosamine constituents were detected, including NDEA, NDBA, NDPA, NDPHA, and NPIP. These constituents were either detected below respective NLs or do not have an NL. With the exception of an estimated value of NDPHA in MW-17-4 (0.032J µg/L), all detections were below 0.01

µg/L. The fourth quarter 2006 results indicated that the presence of nitrosamine constituents is sporadic within the capture zone of the City of Pasadena production wells (specifically, Well 52 and the Arroyo Well) and present at low levels that do not exceed respective NLs. The detection frequency of nitrosamines during the fourth quarter of 2006 was low, with 10 detections out of 216 analyses performed. Since the 2006 monitoring event, NDMA continues to be detected in source area wells and one off-facility well, MW-17-4, at concentrations less than the NL (0.003 µg/L). Based on historical analytical results, nitrosamine compounds, NDMA in particular, are unlikely to be present within the capture zone of the City of Pasadena production wells at levels exceeding the NL. Therefore, it is unlikely that influent groundwater (i.e., groundwater extracted from the City of Pasadena production wells) will contain detectable concentrations.

1,4-Dioxane

1,4-Dioxane was detected during the CGWME in 2003 and in select wells since that time at concentrations ranging from 0.4J to 12 µg/L (Table 2-6). Historical results have indicated that repeated detections of 1,4-dioxane have predominantly occurred in on-facility source area wells, but detections of 1,4-dioxane also have been observed in perimeter and off-site wells. During fourth quarter 2006, 27 samples were analyzed for 1,4-dioxane using EPA Method 8270 SIM. 1,4-Dioxane was only detected in one off-site well (MW-18-4), at a concentration below the NL, but all detections above the NL (3 µg/L) were located in on-facility source area wells. MW-13 (1.94-12 µg/L) and MW-16 (1.1-10 µg/L) have demonstrated relatively consistent detections and consist of the highest concentrations of 1,4-dioxane at JPL. Subsequent sampling events in 2007, 2008 and 2009 indicate that 1,4-dioxane continue to be present in source area wells (MW-13, -16, and -24-1), but are not present in perimeter or off-facility wells at levels above the NL. Based on historical analytical results, it is evident that 1,4-dioxane is unlikely to be present within the capture zone of the City of Pasadena production wells at levels exceeding the NL. Therefore, it is unlikely that influent groundwater (i.e., groundwater extracted from the City of Pasadena production wells) will contain detectable concentrations of 1,4-dioxane.

1,2,3-TCP

1,2,3-TCP was detected during the CGWME in 2003 but was not detected prior to this because previous analytical techniques were not sensitive enough. Detectable concentrations ranged from 0.01J to 0.8 µg/L (Table 2-6) and all detections were greater than the NL, which would be expected because MDLs for 1,2,3-TCP are only slightly less that the NL. Twenty-seven samples were analyzed for 1,2,3-TCP using EPA Method 8270C SIM. 1,2,3-TCP was detected in one well, MW-18, in screens 3 and 4. Both detections were greater than the NL. During the fourth quarter of 2006, 1,2,3-TCP was only detected in MW-18 (screens 3 and 4) at estimated concentrations. These results indicate that detectable concentrations of 1,2,3-TCP are sporadic within the capture zone of the City of Pasadena production wells. Therefore, it is unlikely that influent groundwater (i.e., groundwater extracted from the City of Pasadena production wells) will contain detectable concentrations of 1,2,3-TCP.

Tributylin

Historical data for tributyltin are very sparse. Four wells were analyzed for tributyltin in 1997. Of these, detectable concentrations were seen in two wells (MW-4-2 and MW-12-1). Metals analysis was conducted for the presence of aqueous tin in groundwater. Tin was not detected in any of the wells analyzed for tin in the fourth quarter 2006 sampling event.

Based on these concentration trend data for VOCs and perchlorate, future concentrations at JPL wells are expected to be decreasing because NASA is actively engaged in cleanup of on-facility soil (OU-2) and on-facility groundwater (OU-1) (cleanup activities are discussed in Section 4.2). Because the presence of the emerging constituents is sporadic, and concentrations detected are relatively low, it is unlikely that influent groundwater (i.e., groundwater extracted from the City of Pasadena production wells) will contain detectable concentrations of these constituents.

2.2.1.5 Tentatively Identified Compounds

Tentatively identified compounds (TICs) and unknown scans identified during the OU-1/OU-3 RI and long-term monitoring event through November 2002 are summarized in Table 2-7. As shown in Table 2-7, the wells/screens where the TIC was detected is provided along with number of detections, minimum and maximum values detected and the arithmetic mean. A total of 88 TICs (including unknown scans) were reported; however, only 20 specific compounds were tentatively identified (Table 2-7). Thirteen of these 20 TICs were identified more than once and are listed in order of decreasing number of detections: acetone; ethylbenzene; carbon disulfide; tetrahydrofuran; 2,4-bis(1,1-dimethylethyl)phenol; cyclohexanone; 1,1,2-trichlorotrifluoroethane; isopropylbenzene; 2-methylpropane; dimethyl benzene; hexane; acetic acid, and isobutylene. Another nine TICs were identified only by the class of compound (e.g., "unknown alcohol, unknown phthalate, unknown alkene, unknown C8 acetate ester, unknown hydrocarbon, unknown PAH, or unknown substituted oxetane scan"). No further analysis can be done with the compounds that are listed as unknowns (e.g., unknown scan #191, unknown retention time = 2.51). Note that seven of the 13 TICs identified more than once (i.e., ethylbenzene, 1,1,2-trichlorotrifluoroethane, isopropylbenzene, dimethyl benzene, 2-butanone, dichlorofluoromethane, and methyl-tert-butyl ether [MTBE]) were target analytes (i.e., for which the chemical is listed as a specific analyte in the analytical method) for the OU-1/OU-3 RI groundwater sampling program and/or the long-term quarterly monitoring program.

As indicated in Table 2-7, several concentrations of some of the unknown scans were estimated at several thousand parts per billion; however, all of these results were qualified with a "B", indicating that the analyte was present in the associated blank samples as well. Some of the other unknown scans and TIC classes also were qualified with a "B".

As part of the comprehensive groundwater monitoring event conducted by JPL in December 2002/January 2003, additional analytes required to be analyzed for completion of the Policy Memorandum 97-005 were included. All of the analytical methods included in the comprehensive groundwater monitoring event were requested specifically by CDPH or are included in the category of Title 22 synthetic organic compounds (SOCs) in the CDPH General Characterization Sampling Table. In addition, the list of analytical parameters included in the comprehensive groundwater monitoring event was developed to account for, as much as possible, the TICs identified in previous monitoring events. The analytical laboratory was

made aware of TICs from past sampling events so that they could screen for them during the TIC analysis.

In addition, the CGWME utilized the most sensitive analytical methods available for some of the more important parameters such as nitrosamines, perchlorate, and 1,4-dioxane. Many of the TICs encountered in previous sampling events were compounds that were included on the target analyte list for the CGWME (e.g., acetone, ethylbenzene, carbon disulfide, tetrahydrofuran, 1,1,2-trichlorofluoroethane, 2-butanone, dichlorodifluoromethane, isopropylbenzene, MTBE, and dimethyl benzene [total xylenes]). Of these 10 specific TICs included as target analytes in the comprehensive event, only ethylbenzene and 1,1,2-trichlorotrifluoroethane were detected. Acetone, carbon disulfide, and tetrahydrofuran were not detected in any of the JPL wells and are not included as target analytes in the long-term quarterly monitoring. The other seven analytes (ethylbenzene, 1,1,2-trichlorofluoroethane, 2-butanone, dichlorodifluoromethane, isopropylbenzene, MTBE, and dimethyl benzene) continue to be included as target analytes in the long-term quarterly monitoring at the site. As indicated in Table 2-8, many of the well screens that contained the higher concentrations of the unknown scans and TICs were sampled in the comprehensive groundwater monitoring event.

Because the analytical parameter list was very extensive for the CGWME and the analytical methods more sensitive, the number of TICs and unknowns detected is much lower (refer to Table 2-8) than the number of TICs and unknowns detected previously. The number of wells with TICs and unknowns also decreased. As shown on Table 2-8, n-butyl-benzenesulfonamide is the only TIC that was identified as a TIC in previous sampling events (refer to Table 2-7).

Based on the thorough analytical sampling approach used for the CGWME, the numerous TICs and unknown scans identified during the OU-1/OU-3 RI groundwater sampling (Table 2-7) appear to be associated with less sensitive analytical methods as well as field and laboratory quality control. A significantly lower number of TICs and unknown scans was identified in the CGWME (Table 2-8) as compared to the OU-1/OU-3 RI.

It is reasonable to assume that the TICs and unknown scans identified during the OU-1/OU-3 RI, but not during the comprehensive event, are not present in those wells. However, the comprehensive event did not include the entire monitoring well network. The quarterly groundwater sampling currently conducted at JPL includes analyses for VOCs, total and hexavalent chromium, perchlorate, NDMA, NDPA, and 1,2,3-trichloropropane. VOC analysis is performed using EPA Method 524.2. After the comprehensive groundwater monitoring event, reporting of TICs and unknown scans were not requested from the laboratory. However, based on subsequent discussions with CDPH, TICs and unknown scans have been reported for the second, third, and fourth quarters of the 2006 groundwater monitoring events. Table 2-9 summarizes the TICs/unknowns detected in each of the three sampling events. It appears that the TICs and unknowns are randomly detected in JPL monitoring wells and commonly associated with field and laboratory quality control samples.

2.2.2 Upgradient Groundwater

The Valley Water Company wells are located to the west/northwest of the JPL facility and are considered upgradient wells. A review of basin hydrographs included in historical Watermaster reports (since 1950) support a south/southwest regional flow between the Valley Water Company wells and JPL. The subsurface topography of the basin (i.e., bedrock surface)

also supports a south/southwest regional groundwater flow direction. A summary of constituents detected historically in the Valley Water Company Wells #1, #2, #3, and #4 is provided on Table 2-10. These data indicate that 15 of the 47 chemicals detected in the Valley Water Company wells were VOCs. Six of these VOCs, bromodichloromethane, cis-1,2-DCE, TCE, chloroform, total trihalomethanes, and PCE, were detected frequently (i.e., more than 50%). Carbon tetrachloride was only detected once out of 211 samples. Additionally, nitrate, perchlorate, and naturally occurring constituents, including metals and radionuclides, were detected in these wells. Similar to the trend analysis provided above for the JPL monitoring wells, concentration trends for constituents known to be a concern in production wells located in the Monk Hill area are provided for the Valley Water Company wells. Concentration trends for PCE, TCE, perchlorate, and nitrate are provided on Figure 2-26 for all four Valley Water Company wells.

As shown on Figure 2-26, all chemicals have a consistent up-down pattern, with lower concentrations present during the May/June months, and the higher concentrations present during the July/August/September months. The pattern observed in the Valley wells is likely caused by the effects of injection of non-native water at these wells. Concentrations of PCE and TCE are low compared to their MCL of 5 µg/L and exhibit a decreasing trend in all wells. These trends are expected to be similar in the future.

Perchlorate concentrations in the Valley Water Company wells have been relatively consistent over time at levels less than the perchlorate MCL of 6 µg/L since 2002.

The MCL for nitrate (45 mg/L) has been exceeded in all four Valley wells (Figure 2-27). For all four wells, it appears that lower nitrate detections occur during periods of non-native water injection and higher nitrate detections when injection is not occurring. Nitrate concentrations in Well 1 are the lowest of the four and have ranged from less than 10 mg/L to over 45 mg/L. For Well 2, nitrate concentrations are the highest of the four wells and range from less than 5 mg/L to 84 mg/L. An increasing trend is observed between July 1997 and July 1998. During this time period, concentrations appear to increase, but resume a consistent up-down pattern as before. For Well 3, nitrate concentrations range from less than 5 mg/L up to 72 mg/L and an overall increasing trend is observed beginning with the July 1999 data which start to decrease sometime in 2003. Nitrate concentrations in Well 4 range from less than 5 mg/L to 63 mg/L. In Well 4, nitrate concentrations were fairly consistent from 1996 through 2001, but began a decreasing trend in 2002 which continued through 2006. Based on the fluctuating concentrations observed in these upgradient wells, future concentrations would be expected to fluctuate, depending on the injection cycle of these wells.

2.3 Identification of Chemicals Used at or Generated by Facilities Responsible for Chemicals Known to be in Source Water

An assessment was conducted to identify chemicals used at or generated by the sources associated with the known chemicals in the groundwater contained within the capture zones of the subject production wells.

2.3.1 Jet Propulsion Laboratory

Sources included an electronic database search, a records review for JPL (previous reports and investigations that include reviews of manifests and interviews with personnel), and a review of National Archives and Records Administration (NARA) files related to JPL.

2.3.1.1 Environmental Database Review

An electronic environmental database search was completed to identify potential chemicals used at or generated by the JPL facility. The search was completed using reasonably ascertainable environmental databases, including standard state and federal sources in accordance with the American Society of Testing Materials (ASTM) Standard Practice E1527-00. In general, the use of ASTM E1527-00 is on a voluntary basis for those wanting to assess the environmental condition of commercial property. As the standard states, it is primarily used as a guide for conducting an inquiry to identify recognized environmental conditions in connection with a property. Appendix D provides the environmental database review, which includes the list of federal and state databases searched.

The chemicals identified as used at JPL from the electronic database search are summarized in Table 2-11. The chemicals identified were either listed as a "NPL contaminant," listed on a manifest, reported as a spill/leak, or identified as a substance in an underground storage tank (UST). The chemicals listed are metals, petroleum-related chemicals, and constituents of solvents, primarily VOCs.

2.3.1.2 Review of Previous Investigations and Studies for JPL

The following reports were reviewed to identify chemicals used at or generated by NASA:

- Ebasco Environmental (1988), *PA/SI Report for Jet Propulsion Laboratory*.
- Ebasco Environmental (1990a), *Expanded Site Inspection Report for NASA-Jet Propulsion Laboratory*.
- Ebasco Environmental (1990b), *Supplemental Information to the Expanded Site Inspection Report on the NASA-Jet Propulsion Laboratory*.
- JPL Groundwater Sampling Program (1993), *Summary of Groundwater Sampling Events Completed at JPL Prior to the CERCLA RI/FS*.
- FWEC (1999a), *Final RI Investigation for Operable Units 1 and 3: On-Site and Off-Site Groundwater*.
- FWEC (1999b), *Final RI Investigation for Operable Unit 2: Potential On-Site Contaminant Source Areas*.
- FWEC (2000), *Draft FS for Operable Units 1 and 3: On-Site and Off-Site Groundwater*.

Table 2-12 lists chemicals that were identified based on these previous studies and investigations.

2.3.1.3 National Archives and Records Administration Review

Historical records for NASA and JPL were reviewed to identify chemicals used at the JPL facility. The records were reviewed at the NARA, Pacific Region, located in Laguna Niguel, CA. The following files were reviewed:

- Western Support Office, Central files for 1939-1962
- NASA Resident Office, Legal Opinion files for 1957-1974
- NASA Pasadena Office Cryogenics Branch, Contracts, Pressurants, Propellants files for 1965-1972
- JPL, Research and Development files for 1967-1984
- JPL, Publication Records Set files for 1967-1985
- JPL, Upper Level Management files for 1960-1967
- JPL, Contract Administration files for 1971.

Chemicals identified as part of this historical records review (i.e., NARA review) are listed in Table 2-13. These chemicals were used for various research activities at JPL and were identified from research and purchase records. The chemicals identified are primarily fuel propellants, coolants, and chemicals related to electronics research.

2.3.1.4 Summary of Chemicals Used at or Generated by JPL

Chemicals presented in Table 2-11 (Environmental Database Review), Table 2-12 (Previous Studies and Investigations), and Table 2-13 (National Archives and Records Administration Review) were combined into one summary table (Table 2-14). All identified chemicals that have been used at or generated by JPL are summarized on this table; however, the majority of these chemicals have not been detected during the past 20 years of groundwater sampling and monitoring.

2.3.2 Upgradient Groundwater

Forty-one chemicals have been detected at least once in one or more of the four Valley Water Company Wells, which represent upgradient groundwater in the area of the production wells (Table 2-10). Of these 41 detected chemicals, 15 are VOCs, one is perchlorate, 17 are metals, and eight are radioisotopes.

Perchlorate

The RWQCB reports in a memorandum dated April 28, 2003, that perchlorate has been detected at more than 173 surface water and groundwater sampling points within the Los Angeles Region at levels ranging from 4 to 159 µg/L (Dickerson, 2003). A RWQCB memorandum dated January 24, 2003, states, "33% of the source sites contributing to the perchlorate impact in groundwater are known, but many sources are unknown" (Dickerson, 2003).

It is also noteworthy that a major perchlorate release by Kerr McGee Corporation impacted the Las Vegas Wash, a tributary to Lake Mead and the lower Colorado River. The Colorado River is a major source of water for the Metropolitan Water District (MWD). As reported by Dickerson (2003), initial concentrations in the Las Vegas Wash area were as high as 3,700,000 µg/L, and concentrations in Lake Mead were as high as 10 µg/L. Perchlorate levels in lower

Colorado River water now range from 4 to 9 µg/L. As stated in the RWQCB memorandum, "the potential impact of perchlorate contaminated imported water from the Colorado River, the probable lack of publicly owned treatment works (POTWs) removal capability, and the possibility that groundwater spreading/recharge projects may play a role in spreading perchlorate pollution are all concerns worth noting" (Dickerson, 2003).

PCE and Nitrates

The City of La Cañada-Flintridge is located in the San Gabriel Valley in the County of Los Angeles and is approximately 8.6 square miles in size (Willdan, 2003). This city is one of a few communities within the greater Los Angeles region that still relies on septic systems for sewage disposal. Of 6,989 homes in the area, only 2,218 units are served by a central sewage system, and many of the systems outside the central system are aged and failing (Willdan, 2003). The La Cañada-Flintridge Department of Public Works continues to receive numerous reports of septic overflows and failures annually. Septic overflows and system failures lead to sanitary and public health concerns, including the potential for contamination of drinking water supplies when sewage collects around water lines.

In addition to the sanitary and public health concerns of sewage overflow, the presence of PCE and elevated concentrations of nitrates in regional groundwater (e.g., Verdugo Basin, upgradient and along Foothill Boulevard) have been associated with historic uses of cesspools and septic systems in the La Cañada-Flintridge area. PCE was used as a septic system cleaner, whereas nitrates are byproducts of wastes contained within the septic systems. Excerpts taken from information posted by EPA Region 9 regarding the Verdugo Basin in the San Fernando Valley is provided below:

- The maximum concentration of PCE reported in the Verdugo Basin is 52 µg/L during July 1989. The area of greatest PCE groundwater contamination was located in and near the Glenwood well field, where historic concentrations averaged between 5 µg/L and 20 µg/L throughout the 1980s. The most recently available data (2002) indicate PCE concentrations of less than 1.4 µg/L in the Glorietta well field, and less than 2.3 µg/L in the Glenwood/Mills well field. Current PCE levels in the Verdugo Basin are below the Federal and state MCL of 5 µg/L. Overall, PCE in the Verdugo Basin is less widespread and at lower concentrations than in the past.
- To date, the maximum concentration of nitrate detected in the Verdugo Basin is 101 mg/L during February 1995. Between 1988 and 2002, nitrate values in the Glorietta and Glenwood well fields have remained at approximately the same concentrations, with ranges from 25 to 50 mg/L and 40 to 90 mg/L, respectively. The maximum concentration of nitrate in EPA's monitoring wells is 86.8 mg/L detected in 1993. Potential sources of nitrate contamination include fertilizer applied during agricultural practices, animal waste from confined animal facilities, and septic tank effluent.

2.4 Identification of Other Potential Sources and Determination of the Vulnerability of the Source Water to these Other Sources

This section describes the resources that were reviewed to identify other potential sources that could adversely impact groundwater quality within the capture zones of the production wells. Additionally, based on the identified potential sources, a list of chemicals used at or generated by the source was developed. Finally, a qualitative determination is presented describing the vulnerability of the groundwater within the capture zones of the production wells to the chemicals associated with the other potential sources. The vulnerability of the groundwater varies depending on the nature of the activity, types of chemicals used, potential for release to groundwater, and distance from the production wells.

Although this section identifies numerous other potential contamination sources, only limited information about chemicals used or generated and possible releases were available. However, this information gap is countered by the groundwater monitoring program at JPL that was discussed in previous sections.

2.4.1 Identification of Other Potential Sources

To identify potential sources based on activities and types of chemicals, a search from the Environmental Data Resources (EDR) Search Report (EDR, 2002) was completed. This report compiles information from various local, state, and Federal resources including files, records, and databases. Many of the sites identified in the EDR report treat, store, or dispose of hazardous material. These sites are required to register the use of these compounds with Federal, state, or local agencies. The information from these resources was gathered, compiled, reviewed, and evaluated to identify the potential sources.

The search was completed using reasonably ascertainable environmental databases, including standard state and Federal sources in accordance with ASTM Standard Practice E1527-00. The approximate minimum search distance is based on varying factors (as summarized in Section 7 of ASTM Standard Practice E1527-00), but defined to be one mile for properties on the Federal NPL site list. Therefore, an approximate 1-mile radius area was applied, centered at the JPL site. In addition, an approximate 1-mile search was conducted centered at the Arroyo Well. The combined search area is shown on Figure 2-28 and the identification numbers associated with this figure are presented in Table 2-15. Appendix D contains a brief description of each database searched, along with the ASTM list of records, including the resulting number of sites identified within the ASTM search distance.

The potential sources identified in the EDR search have been grouped by type of site and summarized below.

2.4.1.1 Landfills

Sanitary landfills, dumps, and other related waste disposal sites are potential sources of chemicals in groundwater. Three inactive landfills were identified in the Solid Waste Facility (SWF)/Landfill Facility (LF) database that are located within the study area:

1. NASA-JPL Dump, also known as the George Hagan Dump – 4800 Oak Grove Drive, Pasadena, CA. This former disposal site was located northwest of the Arroyo Well and Well 52, on the JPL property. According to California's Solid Waste Information System, this was listed as a solid waste disposal site that is now closed. Information regarding the dump was not on file at the Solid Waste Management Program within the Los Angeles County CDPH (personal communication between Battelle and the Los Angeles County CDPH), indicating that a permit for the dump may have been filed with the county years ago, but use of the dump for permitted application did not occur. Records regarding the use of this dump were not available.
2. Millard Cañon Dump – 3900 Cañon Crest Road, Altadena, CA. This former disposal site is located northeast of the Arroyo Well and Well 52. According to a Closed Site Assessment Form dated October 13, 1995, obtained from the Los Angeles County CDPH, the Millard Cañon Dump was operated by the Los Angeles County Road Department during 1969 and 1972. The site was basically an unlined pit that was used to dispose of inert material (e.g., dirt and street repair material) left behind by a heavy rainfall. Some equipment (i.e., tractor, car parts) that had been left behind is now part of the dump. Only the north side of Millard Cañon was filled with the material. A copy of the Closed Site Assessment Form is included in Appendix E.
3. Lincoln Debris Disposal Area – 600 Loma Alta Drive. This former solid waste disposal site is located northeast of the Arroyo Well and Well 52, and was operated by the Los Angeles County Flood Control District. It is closed and not currently regulated.

2.4.1.2 Hazardous Waste Generators

A Resource Conservation and Recovery Information System (RCRIS) large quantity generator (LQG) and RCRIS small quantity generators (SQGs) were identified within the study area. The type of activity and type of wastes (if reported) associated with each waste generator are presented in Table 2-16. Information on the type of wastes generated by six of the 14 RCRIS sites was not available. Information about the location of the RCRIS sites with reported wastes is presented below:

1. JPL – 4800 Oak Grove, La Cañada, CA 91011. The site is located northwest of the production wells, on JPL property.
2. Crystal Cleaners – 444 Foothill Boulevard, La Canada, CA 91011. The site is located west of the production wells.
3. Thomas A. Edison Elementary School – 3126 N. Glenrose Avenue, Altadena, CA 91001. This site is located west of the production wells.
4. Autosport Engines – 741 W. Woodbury Road, Altadena, CA 91001. This site is located south of the PWP and LAWC production wells, and west of the Rubio Cañon and Las Flores production wells.
5. 1X Mobil Oil/Mobil Oil Corp – 15 W. Woodbury Road, Altadena, CA 91001. This site is located south of the production wells.

6. Pasadena USD – 740 W. Woodbury Road, Altadena, CA 91001. This site is located south of the PWP and LAWC production wells, and west of the Rubio Cañon and Las Flores production wells.

2.4.1.3 Underground Storage Tanks

The State Water Resources Control Board (SWRCB) leaking underground storage tank (LUST) database contains an inventory of reported LUST incidents (i.e., reported releases). Nine LUST sites were reported within the study area. Table 2-17 summarizes the status of these LUST sites.

Additional information for these LUST sites is provided below:

1. ARCO #1684 – 550 Foothill Boulevard West, La Cañada-Flintridge, CA 91011. The property is located west of the production wells. Soil and groundwater were impacted by gasoline that was released from a LUST in 1991. A PA was conducted in 1989. A Remediation Plan was developed and a Pollution Characterization was completed in 1992. MTBE was detected in groundwater in 1995. The oversight agency (RWQCB) determined that remedial action was completed or deemed unnecessary, and the case was subsequently closed in 1996.
2. Flintridge Riding Club – 4625 Oak Grove Drive, La Cañada-Flintridge, CA 91011. The property is located southwest of the Arroyo Well and Well 52. Soil was contaminated with an unknown substance that was released from a leaking underground storage tank. The Local Implementing Agency (LIA) determined that remedial action was completed or deemed unnecessary, and the case was subsequently closed in 1990.
3. JPL – 4800 Oak Grove, La Cañada, CA 91011. The property is located northwest of the production wells, on the JPL property. Gasoline was released in the soil from a LUST located at the facility in 1990; the UST was subsequently closed in 1990.
4. Oak Grove Ranger Station – 4600 Oak Grove Drive, La Cañada-Flintridge, CA 91011. The property is located south and west of the production wells. Soil was contaminated with gasoline that was released from a LUST in 1990. The tank was closed, but the site was not tested for MTBE. The current site status is unknown.
5. Pacific Bell – 4815 Oak Grove Avenue, La Cañada, CA 91011. The property is located northwest of the production wells. Soil was contaminated with diesel fuel that was released from a leaking tank in 1990. It was determined that remedial action was completed or deemed unnecessary, and the case was subsequently closed in 1991.
6. Szkiba Auto (Former) – 3081 Lincoln Boulevard North, Altadena, CA 91001. The property is located east of the PWP production wells and north of the LAWC, Rubio Cañon, and Las Flores production wells. During tank closure in 1990, soil was discovered to be contaminated with gasoline that was released from a LUST. The tank was closed, but the site was not tested for MTBE. The RWQCB determined that Remedial Action was completed, and the case was subsequently closed in 1996. According to the California's Hazardous Waste Information System (HAZNET), it appears that 1.3 tons of soil was removed from this location.

7. LA County Fire Station #12 – 2760 Lincoln Avenue, Altadena, CA 91001. The property is located east of the PWP and LAWC production wells, and north of the Rubio Cañon and Las Flores production wells. The report indicated that there was a release of gasoline to soil which was discovered in 2001. The status of the site was not reported.
8. Transamerica Financial Services – 620 W. Woodbury Road, Altadena, CA 91001. The property is located south of the PWP and LAWC production wells, and southwest of the Rubio Cañon and Las Flores production wells. A release of unknown product to soil occurred in 1996. The case is reported as closed, however the status of the investigation is unknown.
9. USDA Forest Service – Oak Grove Drive North, La Cañada, CA 91011. The property is located west of the PWP and LAWC production wells and northwest of the Rubio Cañon and Las Flores production wells. Soil was contaminated with gasoline that was released from a LUST in 1990. The tank was closed, but the site was not tested for MTBE. A remediation plan was developed in 1990. Pollution Characterization was conducted in 1991; current status of the site is unknown.

2.4.1.4 Documented Spills/Leaks/Discharges

Information retrieved regarding accidental releases or spills is presented as follows:

1. Los Angeles County Public Works – 4001 Canyondell Drive, Altadena, CA. A release of 200 gallons of untreated sewage was reported in November 1988. Information for this release was retrieved from the EPA's Emergency Response Notification System (ERNS), which reports releases of oil and hazardous substances.
2. 4800 N. Oak Grove Drive – Pasadena, CA 91109. A five-gallon release of liquid chromic acid occurred at this facility in February 1988. Information regarding environmental impact, cleanup, and status was not reported. The release was reported in the California Hazardous Material Incident Report System (CHMIRS), which reports on accidental releases or spills.
3. 292 N. Figueroa Drive (private residence) – Altadena, CA 91001. A one-gallon release of muriatic acid (hydrochloric acid) in the driveway of a private residence occurred in 1998. The fire station was called to clean it up. No information regarding additional environmental investigation is available.
4. 7073 Woodbury Road – Altadena, CA 91001. A five-gallon release of printing press cleaner-solvent (trade name ML2) occurred in 1990. No information regarding additional environmental investigation is available.

2.4.1.5 Treatment Plant Effluent Water

A review of historical records and files did not identify a treatment plant effluent site location within the study area. However, one waste discharge system (WDS) site was identified from the environmental database search due to an active waste discharge permit:

1. Lincoln Avenue Water Company/South Coulter Water Treatment Plant – 564 West Harriet Street, Altadena, CA 91001. The facility designation of Category C refers to miscellaneous wastes, which include wastes from dewatering, recreational lake

overflow, swimming pool wastewater, water park wastewater, groundwater seepage, and other similar wastes. Additionally, the designation is associated with influent or solid wastes that pose a threat to water quality because of high concentrations of biochemical oxygen demand (BOD), hardness, chloride, etc. The facility is located east of the PWP production wells and northwest of the Rubio Cañon and Las Flores production wells, and is not expected to pose a threat to groundwater.

2.4.2 Assessment of the Vulnerability of the Drinking Water Source

This section provides a general assessment of the vulnerability of the groundwater in the capture zones for the production wells, to the chemicals identified in Section 2.4.1 and summarized in Table 2-18. Figure 2-28 shows the locations of known and potential chemical sources within the study area and the vicinity of the production wells. The source locations are marked numerically or with a letter, which are described in Table 2-15.

The vulnerability of the groundwater to individual facilities within the search area is summarized in Table 2-19. Facilities that are located within the capture zone and upgradient of the groundwater flow path were reviewed to determine whether the groundwater within the capture zone would be vulnerable to chemical releases. Because these known and potential chemical sources are located within and/or upgradient of the study area, the potential vulnerability of the groundwater to these sources is greater than compared to the other potential chemical sources identified from the database search (i.e., those sources outside the capture zone and downgradient). The groundwater was determined to be vulnerable if the facility had a chemical release in the past and/or if the facility had been identified as being associated with the use or storage of chemicals listed in Table 2-19.

As shown on Table 2-19, the groundwater is potentially vulnerable to at least 14 facilities located directly within the capture zone. These 14 facilities are primarily comprised of automotive service/repair shops and dry cleaners. Petroleum hydrocarbons and chlorinated solvents are common chemical constituents associated with these types of facilities. In addition, 10 facilities located within the capture zone were registered in at least one of the environmental databases, but chemicals associated with these facilities were not listed.

For facilities located outside the capture zone, but upgradient of the study area, the groundwater is potentially vulnerable to at least nine facilities primarily comprised of automotive service/repair shops and dry cleaners. In addition, 14 facilities were registered in at least one of the environmental databases, but chemicals associated with these facilities were not listed.

Based on the results of the environmental database search which identified the locations of potential source facilities within and upgradient of the study area, the groundwater may be considered most vulnerable to activities associated with automotive service/repair shops and dry cleaners in addition to activities associated with JPL.

2.4.3 Chemicals Potentially Impacting Groundwater Within the Capture Zones of the Production Wells

Chemicals in upgradient water may potentially be impacting groundwater within the capture zones. As indicated from the Valley Water Company analytical data, chemicals potentially impacting groundwater from upgradient sources include chlorinated VOCs, perchlorate, nitrate, and naturally occurring constituents such as metals and radionuclides. PCE and nitrates from the La Cañada-Flintridge may be potentially impacting groundwater as well.

Chemicals used at or generated by facilities other than JPL may be contributing petroleum hydrocarbons and chlorinated compounds.

For JPL as a source, chemicals that could potentially impact the groundwater within the capture zone of the production wells could include any chemical used at or generated by JPL, and any chemical detected in groundwater or soil as identified during the RIs. Therefore, in order to identify chemicals potentially impacting groundwater from JPL, all soil and groundwater analytical data collected during the RIs and long-term monitoring program were reviewed, as well as the results of a historical records search that identified chemicals used at or generated by JPL. Based on this review, chemicals were selected for a more in-depth evaluation to determine which chemicals are most likely to potentially impact groundwater.

A table was developed based on the review of analytical data and historical records search (Table 2-20). The table included emergent constituents detected in the comprehensive monitoring event, constituents detected in soil or groundwater during the RIs, and any other constituent potentially present in the environment just because it was suspected or known to have been used at JPL. Table 2-20 provides a step-wise process of evaluation that indicates if the constituent was detected in soil or groundwater, where it was detected, if it would be expected to travel through the environmental media based on its chemical properties (i.e., fate and transport), and any other information that would help in determining if the constituent would impact groundwater. The objective was to identify chemical constituents known to be in groundwater and those constituents suspected of impacting groundwater that required further evaluation for confirmation. To more thoroughly evaluate those constituents identified in the initial data review, a matrix was developed (Table 2-21) to provide a step-wise process of evaluation that indicates if the constituent was detected in soil or groundwater, where it was detected, and if it would be expected to travel through the environmental media based on its chemical properties (i.e., fate and transport).

The group identification column in Table 2-21 designates the analyte in one of three groups: 1, 2, or 3. A "1"indicates that the parameter is impacting groundwater (or could potentially impact groundwater) and is already included in the long-term monitoring plan, either as a chemical known to be present in groundwater or as an additional target parameter included in the analytical method. A "2" indicates that the analyte may potentially impact groundwater. A "3" indicates that the compound should not impact groundwater based on the results of previous soil and groundwater investigations and its chemical-specific fate and transport properties.

Chemicals potentially impacting groundwater based on the results of years of groundwater monitoring data in conjunction with the matrix evaluation include VOCs, perchlorate, 2,4,6-

trinitrotoluene, HMX, nitrobenzene, RDX, 1,2,3-TCP, 1,4-dioxane, chlorate, NDEA, NDMA, NDBA, NDPA, NDPHA,NPIP.

TICs/unknowns were not evaluated in the matrix. Based on the evaluation provided in Section 2.2.1.4, it appears that the TICs and unknowns are randomly detected in JPL monitoring wells and commonly associated with field and laboratory quality control samples.

2.4.3.1 Fate and Transport Modeling

Simple fate and transport groundwater modeling was conducted to predict if chemicals in JPL monitoring wells will reach the production wells at concentrations above screening criteria. The results of the model were used to predict future conditions from what is currently known about the groundwater quality on the JPL facility. Screening criteria used in the simulations were either California regulatory standards (i.e., MCLs or NLs), or EPA Region 9 preliminary remediation goals for chemicals not having regulatory standards.

The Analytical Transient 1-, 2-, 3-Dimensional Model (AT123D) was used to perform the groundwater transport simulations. AT123D is an analytical model that computes the spatial distribution of chemical concentrations and predicts the migration of a plume though the aquifer. AT123D assumes the aquifer is homogeneous and isotropic and accounts for advection, diffusion, sorption, and decay. The groundwater model was set up to back-calculate the concentration that would need to be present a particular distance away from the production well which would result in concentrations exceeding screening criteria in the production wells.

Aquifer parameters from the JPL groundwater flow model (NASA, 2004) were used as input into the AT123D model. The parameters and values used are:

- Bulk density of 1,650 kg/m^3
- Effective porosity of 0.3 (unitless)
- Hydraulic conductivity of 0.28 m/hr
- Hydraulic gradient of 0.008 ft/ft.

Several sets of simulations were performed, incorporating different travel distances and assuming various transport mechanisms. Simulations were run for travel distances of 500 ft, 1,000 ft, 1,500 ft, 2,000 ft, 2,500 ft, and 3,000 ft and assumed an instantaneous (slug) source (i.e., a one-time release). These distances incorporate the majority of monitoring wells located upgradient of the Arroyo well in which chemicals have been detected and monitored. Figure 2-29 provides the radii of interest for the Arroyo Well, because this well is located nearest the JPL facility. Note that the groundwater model simulations are applicable to any of the production wells.

The first set of simulations assumed advection and dispersion as the transport mechanisms; no sorption was included in the simulations. Longitudinal dispersivity was estimated at one percent of the flow field (i.e., travel distance) and the transverse and vertical dispersivities were assumed to be 10% and 1%, respectively, of the longitudinal dispersivity. These dispersivity values are commonly used rule of thumb estimates.

The second set of simulations included sorption along with dispersion and diffusion. Sorption was included via a chemical-specific distribution coefficient that is used in conjunction with other aquifer parameters to estimate a retardation factor that is applied to the advection/dispersion flowrate. Although chemical-specific distribution coefficients for some of

the chemicals included in this study are available, the majority of coefficients are not. In addition, distribution coefficients are site-specific and none of the published values are representative of conditions on JPL. As a result, order of magnitude estimates of the distribution coefficients (0.001, 0.01, 0.1, and 1.0 mL/g) were used that span the range of acceptable and probable values.

Table 2-22 presents the results of the modeling simulations for each of the selected chemicals. Chemicals selected to be modeled were those that have been detected in both the JPL wells and the production wells (e.g., perchlorate, TCE, PCE, carbon tetrachloride) and others that were identified in Section 2.2.3 that are relatively new detections in JPL wells (2,4,6-TNT, HMX, RDX, NDMA, n-nitrosodipropylamine, n-nitrosodiphenylamine, chlorate, 1,2,3-TCP, and 1,4-dioxane).

The concentrations summarized on Table 2-22 are the estimated concentrations that have to exist a particular distance away from the production well so that migration of the constituent in groundwater would not exceed the target level (i.e., MCL, NL or EPA Region 9 PRG) once it reached the production well.

For illustrative purposes, the Arroyo Well is used to demonstrate the results of the groundwater simulations by comparing the range of concentrations detected in JPL wells (those wells located within the various radii shown on Figure 2-29) to concentrations estimated from the groundwater simulations (assuming no sorption). Average concentrations[2] detected in JPL since 1994 wells are compared to the estimated concentrations required to meet the target level as summarized in Table 2-23. Based on comparison to the results of the model, two of these constituents (perchlorate and carbon tetrachloride) have average concentrations that would result in concentrations exceeding target levels in the Arroyo Well. PCE has been detected in the Arroyo Well, but the detected concentrations did not exceed the MCL, which coincides with the modeling results. The modeling results also indicate that TCE concentrations in JPL wells were not detected at levels capable of causing exceedances of the MCL in the Arroyo Well; however, TCE has been detected in the Arroyo Well at concentrations exceeding the MCL.

The analytes 2,4,6-TNT, HMX, RDX, NDMA, NDPA, n-nitrosodiphenylamine, chlorate, TCP, and 1,4-dioxane were never detected in the Arroyo Well (either because they were not analyzed for or detection limits were too high), but have been detected in JPL monitoring wells since the Arroyo Well was shut down. Based on the results of the model, NDPA, TNT and RDX are not at sufficient concentrations in JPL monitoring wells to result in levels exceeding drinking water target levels (i.e., MCLs, NLs, PRGs) (Table 2-23) in the Arroyo Well.

This simplistic fate and transport modeling was only utilized as a tool to provide an indication of what may be potentially present in the Arroyo at some time in the future. There are many uncertainties associated with this model and these results should be treated as such. Similar to the July 15, 2004 Permit Amendment for LAWC, when the PWP production wells are returned to service, samples will be collected for explosive compound analysis, including TNT and RDX, as well as nitrosamine compounds in addition to VOC and perchlorate analysis.

---

[2] Average concentrations, rather than maximum concentrations, were used to represent groundwater concentrations because these average concentrations take into consideration the elevated pulse concentrations that have been observed over time in some wells, plus account for the remedial activities that have occurred in the mid 2000s by incorporating the lower concentrations that are present during more recent years because of the remedial actions taken to date.

2.5 Summary

This section provides a summary of the SWA, including detected chemicals, known and potential chemical sources, chemical concentration trend levels, chemicals potentially impacting groundwater, and the vulnerability of the groundwater located within the capture zones for the Monk Hill production wells.

2.5.1 Known and Potential Sources

JPL is a known source contributing chemicals to the source water as a result of historical disposal practices that were discontinued over 50 years ago. During the 1940s and 1950s, many buildings at JPL maintained subsurface seepage pits for disposal of sanitary wastes and laboratory chemical wastes collected from drains and sinks within the buildings. The RI for OU-2 identified 40 seepage pits, five waste pits (including one area where 55-gallon drums of waste solvent were buried), and four discharge points at the facility that were used during historic operations. Since 1988, NASA has been conducting environmental investigations to identify and define the extent of contamination and has initiated soil and groundwater cleanup efforts to address site-related chemicals of interest, which include VOCs and perchlorate (further discussed in Section 4).

Upgradient groundwater (e.g., Valley Water Company, La Cañada-Flintridge) has been identified as containing concentrations of VOCs (PCE in particular), perchlorate, and nitrate. Although activities have been initiated by the water purveyor and the City of La Cañada-Flintridge to address the presence of these chemicals (further discussed in Section 4), upgradient groundwater may continue to contribute as a potential source of VOCs, perchlorate, and nitrate.

Other potential sources within the source water that may impact groundwater from the production wells were identified from an environmental database search for sites that are NPL-listed; that generate, store, treat, or transport hazardous waste; or have reported spills, LUSTs, or USTs. Based on this search, the groundwater was determined to be potentially vulnerable to at least 14 facilities located directly within the capture zone. These 14 facilities are primarily comprised of automotive service/repair shops and dry cleaners. Of the 14 facilities identified within the capture zone, only five facilities (Pacific Bell, and four automotive service/repair shops) in addition to JPL have had reported releases to the environment that could potentially impact the source water, primarily consisting of petroleum hydrocarbons and chlorinated solvents. Nine facilities were identified as located outside the capture zone, but upgradient of the study area. Only one of these nine facilities was reported to have had a petroleum hydrocarbon release to the environment that could potentially impact source water. Three inactive landfills also were found to be located within the capture zone; however, limited information obtained regarding the operation of these landfills suggests that two of them (Millard Cañon and Lincoln Debris Disposal Area) were solid waste disposal sites, accepting relatively inert material. The other landfill was located on the JPL site and was reported to have only accepted solid waste as well, but records documenting the use of the landfill were not on file with the county or available from JPL.

2.5.2 Detected Chemicals

A summary of chemicals detected within the capture zones of the production wells is provided in Table 2-24. This table contains a comprehensive list of analytes that have been detected at least once in groundwater. Some of the constituents are naturally occurring, while others are the result of historical anthropogenic activities that occurred at JPL and other neighboring sources. Many of these constituents are not currently present in the groundwater or are detected sporadically as indicated in the results from the long-term groundwater monitoring program at JPL.

VOCs and perchlorate are the primary known chemicals in groundwater located in the capture zones of the Monk Hill production wells. VOCs and perchlorate have been detected at the JPL CERCLA site and in upgradient groundwater.

The most commonly detected constituents in source water are the chlorinated VOCs (TCE, PCE, carbon tetrachloride) and perchlorate. Petroleum hydrocarbons such as benzene, ethylbenzene, xylenes, and toluene are infrequently detected. Additionally, several chemical constituents have been detected in more recent groundwater sampling events and include 2,4,6-trinitrotoluene, HMX, nitrobenzene, RDX, 1,2,3-TCP, 1,4-dioxane, chlorate, NDEA, NDMA, NDBA, NDPA, NDPHA, and NPIP. The PAHs, TPH, and phthalates had been detected during the RI, but are not expected to be present in the groundwater based on subsequent groundwater sampling results indicating non-detects, as well as chemical-specific fate and transport properties that would limit migration from soil (as explained in Table 2-21). A few pesticides (e.g., simazine, propachlor) also have been sporadically detected at low levels. Naturally occurring constituents (i.e., metals, radionuclides, cations/anions) are present in the water as expected.

2.5.3 Chemical Level Trends

Concentration trends for the primary known chemicals (e.g., perchlorate, carbon tetrachloride, TCE, and PCE) in the source water were evaluated for monitoring wells MW-3, MW-4, MW-10, MW-17, MW-18, and MW-19 (Figures 2-19 through 2-24) because these wells are located within the capture zone of the four Monk Hill wells (Arroyo, Well 52, Ventura, and Windsor). Trends were mixed for perchlorate; some increasing, while others decreasing, depending on the well screen. Similar mixed trends were observed for the VOCs. Occasionally, concentration spikes in perchlorate and carbon tetrachloride are observed in some of the monitoring wells because groundwater flow conditions are affected by various natural and anthropogenic influences. Therefore, data from the groundwater monitoring wells were grouped according to location and magnitude of concentrations detected and concentration trends evaluated by group (Figure 2-25). Group A contains the wells located in the central portion of JPL, and have the highest concentrations (MW-7, MW-13, MW-16, and MW-24). Wells in Group B are located on-site and have moderate to low concentrations (MW-6, MW-8, MW-11, MW-22, and MW-23). Group C wells are perimeter wells and have varying concentrations (MW-1, MW-2, MW-3, MW-4, MW-5, MW-9, MW-10, MW-12, MW-14, and MW-15). Wells in Group D are located off-site, near production wells and tend to have varying concentrations (MW-17, MW-18, MW-19, MW-20, MW-21, and MW-25). Figure 2-25 provides the average annual concentration trends for four chemicals frequently detected in groundwater in JPL monitoring wells located within each well group. Average annual concentrations shown on these figures were derived by averaging

concentrations for each of the four chemicals across wells/well screens within each well group for each year since long-term groundwater monitoring began at JPL.

When wells are grouped and evaluated based on location with respect to the source area, as they were for Groups A through D, concentration trends show that, in general, concentrations are decreasing over time for perchlorate and the VOCs.

Based on these concentration trend data for VOCs and perchlorate, future concentrations at JPL wells are expected to be decreasing because NASA is actively engaged in cleanup of on-facility soil (OU-2) and on-facility groundwater (OU-1) (cleanup activities are discussed in Section 4.2). Because the presence of the emerging constituents (e.g., 1,2,3-TCP, 1,4-dioxane, explosives, nitrosamines) is sporadic and, concentrations detected are relatively low, it is unlikely that influent groundwater (i.e., groundwater extracted from the City of Pasadena production wells) will contain detectable concentrations of these constituents. In addition, the efforts in La Cañada-Flintridge to obtain sanitary sewer connections at unsewered residences (potential sources of nitrate and PCE) will most likely result in future decreases of concentrations of these constituents.

2.5.4 Chemicals Potentially Impacting Groundwater

A determination of chemicals potentially impacting groundwater was performed in Section 2.4.3. Chemicals originating from upgradient sources as well as from other potential sources in the area were identified. In addition, a stepwise evaluation was conducted whereby analytical data as well as historical records data were reviewed and assessed to determine whether a chemical constituent known to have been used at JPL is present or had the potential to be present in source water. As part of this assessment, chemical constituents detected in groundwater (Table 2-24) were more carefully evaluated to determine if they are currently present in groundwater or had the potential of recurrence in groundwater.

Chemicals originating from upgradient sources and from other potential sources in the area are similar to chemical constituents used at or generated by JPL; therefore, the best source of information to evaluate which chemicals are potentially impacting groundwater is the information provided in Tables 2-20 and 2-21. Chemicals potentially impacting the groundwater within the capture zones of the production wells are most likely going to be those chemicals consistently detected in groundwater with relative high frequency. Based on a review of ugradient sources, the long-term monitoring program at JPL, and the types of chemicals associated with the other identified sources in the area, these chemicals are VOCs (carbon tetrachloride, TCE, and PCE in particular) and perchlorate. In addition, emerging constituents (i..e, the explosive and nitrosamine compounds, 1,2,3-TCP, and 1,4-dioxane) also are identified here because the historical data to support or negate their impact do not exist as it does for the other types of constituents. Naturally occurring constituents (i.e., metals, radionuclides, cations/anions) are present in the water as expected, and are not so much a concern for the potential impact to groundwater as a health concern as they are for the effect they will have on system design and operation (to be discussed in Section 5). Table 2-25 provides an assessment of chemicals detected (i.e., those chemicals listed on Table 2-24) in order to identify those potentially impacting groundwater within the capture zones of the production wells.

2.5.5 Vulnerability of Aquifer

Facilities that are located within the capture zone and upgradient of the groundwater flow path were reviewed to determine whether the groundwater within the capture zone would be vulnerable to chemical releases. The groundwater was determined to be vulnerable if the facility had a chemical release in the past and/or if the facility had been identified as being associated with the use or storage of chemicals. The source water aquifer is vulnerable to chemicals, primarily VOCs and perchlorate, that have been associated with historic activities at the JPL facility. Also, the source water is vulnerable to the upgradient groundwater, which is known to contain VOCs, nitrate, and perchlorate.

Other potential sources of chemical releases were identified from a database search. Based on this search, the groundwater was determined to be potentially vulnerable to at least 14 facilities located directly within the capture zone. These 14 facilities are primarily comprised of automotive service/repair shops and dry cleaners. Of the 14 facilities identified within the capture zone, only five facilities (Pacific Bell, and four automotive service/repair shops) in addition to JPL have had reported releases to the environment. Petroleum hydrocarbons and chlorinated solvents are common chemical constituents associated with all five facilities. For facilities located outside the capture zone, but upgradient of the study area, the groundwater is potentially vulnerable to at least nine facilities primarily comprised of automotive service/repair shops and dry cleaners. Only one of these nine facilities was reported to have had a release to the environment. Petroleum hydrocarbons associated with gasoline are the chemical constituents associated with this release.

Simple fate and transport groundwater modeling was conducted to predict if chemicals in JPL monitoring wells would reach the production wells at concentrations above screening criteria (e.g., MCL or NL). The groundwater model was set up to back-calculate the concentration that would need to be present a particular distance away from the production well which would result in concentrations exceeding screening criteria in the production wells. Chemicals selected to be modeled were those that have been detected in both the JPL wells and the production wells (e.g., perchlorate, TCE, PCE, carbon tetrachloride) and others that were identified in Section 2.2.3 that are relatively new detections in JPL wells (2,4,6-TNT, HMX, RDX, NDMA, n-nitrosodipropylamine, n-nitrosodiphenylamine, chlorate, 1,2,3-TCP, and 1,4-dioxane). The Arroyo Well was used to demonstrate the results of the groundwater simulations by comparing average concentrations detected in JPL wells located various distances away from the Arroyo well to concentrations estimated from the groundwater simulations (assuming no sorption). Based on comparison to the results of the model, five of these constituents (perchlorate, carbon tetrachloride, TNT, RDX, and NDPA) have been detected in JPL wells at least once since 1994 at concentrations that would result in concentrations exceeding target levels in the Arroyo Well. PCE has been detected in the Arroyo Well, but the detected concentrations did not exceed the MCL, which coincides with the modeling results. The modeling results also indicate that TCE concentrations in JPL wells were not detected at levels capable of causing exceedances of the MCL in the Arroyo Well; however, TCE has been detected in the Arroyo Well at concentrations exceeding the MCL. The analytes 2,4,6-TNT, HMX, RDX, NDMA, NDPA, n-nitrosodiphenylamine, chlorate, propachlor, TCP, and 1,4-dioxane were never detected in the Arroyo Well (either because they were not analyzed for or detection limits were too high), but have been detected in JPL monitoring wells since the Arroyo Well was shut down. Based on the results of the model, NDPA, TNT and RDX are at

sufficient concentrations in JPL monitoring wells to result in levels exceeding drinking water criteria (e.g., MCLs, NLs) in the Arroyo Well at some point in the future.

3.0 Raw Water Quality Characterization

The primary goal of the Raw Water Quality Characterization (RWQC) is to estimate the concentrations of the chemicals expected to be present in water extracted from the nine Monk Hill production wells which is used to represent the expected influent concentrations for each of the water treatment plants. This also includes estimating concentrations of specific water quality parameters that may affect treatment plant design. Raw water quality is first evaluated by examining the historical data associated with each of the nine production wells. The data include samples collected and analyzed by the drinking water purveyors in accordance with the monitoring requirements of California Code of Regulations (CCR) Title 22. The historical monitoring data for these wells are discussed in greater detail in Section 3.1. The historical raw water quality is further characterized by examining the variability of chemical concentrations with respect to time and a correlation with concentrations observed for the JPL monitoring wells as discussed in Section 3.2. A combination of both historical production well data and current monitoring well data from JPL are being used to estimate the raw water quality for these production wells when extraction is resumed because estimates of future water quality for production wells that have been out of service for seven to 11 years may not necessarily be representative of groundwater conditions when extraction resumes. Furthermore, since operation of some of the production wells ceased, source area water has undergone remedial action which impacts current conditions in these production wells.

Because a water treatment plant is more likely to be installed to handle multiple production wells, as opposed to installing one plant per production well, the raw water quality potentially associated with the influent to each of the water treatment plants proposed for the JPL remedial action is characterized by evaluating the water quality within the various capture zones described in the SWA (Figures 2-13 through 2-16). Chemicals expected to be present in the water extracted from the production wells consists of those chemicals historically present as well as those chemicals identified in the source water assessment (Section 2.0) as potentially impacting groundwater (Table 2-25). This evaluation serves as a way to estimate the water quality based on the presence of chemicals in the source water that potentially may be impacting groundwater within the capture zones. Water quality characterization for estimated water treatment plant influent is discussed in greater detail in Section 3.3.

3.1 Raw Water Quality Based on Historical Production Well Data

Tables 3-1 through 3-9 summarize the water quality monitoring data for each of the Monk Hill production wells. Included are the number of samples, number of detections, frequency of detection, minimum and maximum detected values, and the arithmetic mean.

3.1.1 Arroyo Well and Well 52

Monitoring data for the Arroyo Well and Well 52 were obtained from the CDPH Drinking Water Program and PWP. The review included data from groundwater samples collected during the late 1980s through June 2002. Sample results are available approximately yearly from the late 1980s through 1994, and then quarterly until 1997 for the Arroyo Well, and until

2002 for Well 52. Because the Arroyo Well ceased operation in 1997, limited data are available from 1998 to 1999, and the few samples available during this period may not be representative of pumping conditions. Use of Well 52 was stopped in early 2002. Although these wells were no longer used for production purposes, groundwater sampling and analysis continued to be performed up until early 2002.

Tables 3-1 and 3-2 summarize the historical monitoring data for the Arroyo Well and Well 52, respectively. For the Arroyo Well (Table 3-1), six chlorinated VOCs (bromodichloromethane, PCE, 1,2-dichloroethane, chloroform, carbon tetrachloride, and TCE) and perchlorate were frequently detected at rates ranging from 25 to 100%. Four other chlorinated VOCs were detected but their frequencies of detection ranged from 4 to 7%. Two pesticides, atrazine and simazine, were detected in two out of seven samples. Atrazine and simazine were detected during two sampling events in 1985, but were not detected in subsequent events in 1989, 1990, 1991, 1993, and 1994. The other analytes detected included inorganic compounds such as metals (aluminum, calcium, copper, iron, magnesium, potassium, sodium, and zinc), radiological parameters (gross alpha, gross beta, radium 226, and radium 228), and general physical/chemical parameters (e.g., turbidity, alkalinity, total dissolve solids [TDS]). Over 200 other organic and inorganic analytes were analyzed for but not detected.

For Well 52 (Table 3-2), eight VOCs, consisting of chlorinated compounds and ethylbenzene, and perchlorate were detected in addition to inorganic compounds such as metals, radiological parameters, and general physical/chemical parameters. TCE, PCE, carbon tetrachloride, 1,2-dichloroethane, and chloroform were detected at frequencies ranging from 16 to 97%. Ethylbenzene was detected once in 1989, but not detected in subsequent sampling events. Over 200 other organic and inorganic analytes were analyzed for but not detected.

3.1.2 Ventura and Windsor Wells

For the Ventura and Windsor Wells, analytical data were obtained from the CDPH Drinking Water Program and the RBMB Database (Geoscience, 2004). Tables 3-3 and 3-4 summarize the monitoring data for the Ventura and Windsor Wells, respectively. For the Ventura Well (Table 3-3), 13 organic compounds were detected: nine chlorinated VOCs, two petroleum hydrocarbons (o-xylene and total xylenes), and two pesticides. PCE, TCE, and chloroform were detected at relative high frequencies, ranging from 43 to 79%. Atrazine and simazine were detected during one sampling event in 1985, but these compounds were not detected in subsequent events in 1989 through 2002. Similarly, the xylene compounds were detected in April 2000, but not detected in subsequent sampling events. Perchlorate also was detected frequently (70%). The other analytes detected included inorganic compounds such as metals, radiological parameters, and general physical/chemical parameters. Over 200 other organic and inorganic analytes were analyzed for but not detected.

For the Windsor well (Table 3-4), 12 organic compounds and perchlorate were detected. The majority of the organic compounds detected were chlorinated VOCs. Benzene was detected once in 1995, but not detected again in subsequent events. Relative high frequencies of detection were observed for TCE, PCE, and chloroform. The other analytes detected included inorganic compounds such as metals, radiological parameters, and general physical/chemical parameters. Over 130 other organic and inorganic analytes were analyzed for but not detected.

3.1.3 LAWC Well #3 and Well #5

For the LAWC wells, monitoring data from June 1991 to October 2002 and May 2003 through November 2003 for PCE, TCE, carbon tetrachloride, 1,1-DCA, and chloroform were used in the water quality characterization (Geoscience, 2004) (2003 data for all constituents were not available at this time). Perchlorate data for these two wells were obtained from 1997 through December 2005 (Geoscience, 2004; CDPH, 2006). Table 3-5 summarizes the monitoring data for LAWC Well #3, and Table 3-6 summarizes the data for LAWC Well #5. For LAWC Well #3, (Table 3-5), eight organic compounds, which included six chlorinated VOCs and two pesticides, and perchlorate were detected in addition to inorganic compounds such as metals, radiological parameters, and general physical/chemical parameters. Atrazine and simazine were detected during two sampling events in 1985, but these compounds were not detected in subsequent events between 1990 through 1999. Over 200 other organic and inorganic analytes were analyzed for but not detected.

For LAWC Well #5, the only organic compounds detected were chlorinated VOCs. TCE, PCE, carbon tetrachloride, and chloroform were detected frequently. Perchlorate also was detected frequently, in addition to inorganic compounds such as metals, radiological parameters, and general physical/chemical parameters. Over 200 other organic and inorganic analytes were analyzed for but not detected.

More recent data (i.e., 2006) for perchlorate, TCE, PCE, and carbon tetrachloride are summarized in JPL's Quarterly Groundwater Monitoring Technical memorandums located on the NASA CERCLA Program Web site (http://jplwater.nasa.gov/NMOWeb/AdminRecord/ADMIN_KeyDocuments.asp). Perchlorate concentrations in LAWC #3 ranged from 20- 27 µg/L, but were much lower in LAWC #5, ranging from 5-10 µg/L. Carbon tetrachloride concentrations ranged from 2 to 3 µg/L during 2006 in LAWC #3 and were fairly consistent around 1 µg/L in LAWC #5. PCE concentrations remained below 1 µg/L in both wells, while TCE concentrations ranged from 2 to 3 µg/L in LAWC #3 and 4 to 5 µg/L in LAWC #5. Based on a comparison to historical data, 2006 perchlorate concentrations were higher than the historical range of concentrations, while TCE and PCE concentrations appear to be lower and carbon tetrachloride were fairly similar.

3.1.4 Rubio Cañon Well #4 and Well #7

Historical monitoring data for Rubio Cañon Wells #4 and #7 are summarized in Tables 3-7 and 3-8, respectively. Monitoring data were obtained from the CDPH Drinking Water Program and the RBMB Database (Geoscience, 2004) and include samples collected from June 1985 through January 2003 for Well #4, and January 1987 through January 2003 for Well #7. Perchlorate data also were included for both wells through October 2005 (Geoscience, 2004; CDPH, 2006). For Well #4, two chlorinated compounds (dibromochloromethane and chloroform), two pesticides (atrazine and simazine), and perchlorate, in addition to inorganic compounds such as metals, radiological parameters, and general physical/chemical parameters, were detected. Atrazine and simazine were detected during two sampling events in 1985, but these compounds were not detected in subsequent events through 2002. Over 200 other organic and inorganic analytes were analyzed for but not detected.

For Well #7, TCE, chloroform, and perchlorate were detected along with inorganic compounds such as metals, radiological parameters, and general physical/chemical parameters. Over 200 other organic and inorganic analytes were analyzed for but not detected.

More recent data (i.e., 2006) for perchlorate are summarized in JPL's Quarterly Groundwater Monitoring Technical memorandums located on the NASA CERCLA Program Web site (http://jplwater.nasa.gov/NMOWeb/AdminRecord/ADMIN_KeyDocuments.asp). Data for TCE, PCE and carbon tetrachloride were not available for these wells. Perchlorate concentrations in both wells were below the detection limit of 4 µg/L throughout the 2006 monitoring period. Historical concentrations in the #7 wells were nondetect, while perchlorate concentrations in the #4 wells have consistently remained around 4 µg/L.

3.1.5 Las Flores Well #2

Table 3-9 summarizes the monitoring data for Las Flores Well #2. The data set includes monitoring data for samples collected from June 1987 to September 2002, and additional data through June 2003 for chloroform, 1,1-DCE, and carbon tetrachloride, through November 2003 for PCE (Geoscience, 2004), and through December 2005 (Geoscience, 2004; CDPH, 2006) for perchlorate. Well #2 has 11 organic compounds, consisting of chlorinated VOCs and petroleum hydrocarbons, which have been detected at least once. TCE and the other chlorinated VOCs were detected frequently, whereas the petroleum hydrocarbons (ethylbenzene and xylenes) were detected in 1998, but not in any subsequent events. Perchlorate and other inorganic compounds such as metals, radiological parameters, and general physical/chemical parameters also were detected. Over 200 other organic and inorganic analytes were analyzed for but not detected.

More recent data (i.e., 2006) for perchlorate and PCE are summarized in JPL's Quarterly Groundwater Monitoring Technical memorandums located on the NASA CERCLA Program Web site (http://jplwater.nasa.gov/NMOWeb/AdminRecord/ADMIN_KeyDocuments.asp). Data for perchlorate concentrations ranged between 6 and 7 µg/L throughout the 2006 monitoring period, while PCE concentrations were less than 1 µg/L. Recent perchlorate concentrations are fairly consistent with historical concentrations, but 2006 PCE concentrations were much less than historical concentrations.

3.2 Variability of Chemical Concentrations Based on Historical Production Well Data

This section includes an evaluation of the variability of concentrations for perchlorate and the more frequently detected chlorinated VOCs (TCE, PCE, and carbon tetrachloride) in the groundwater from all of the production wells using the historical dataset for each production well. Identification of the variability of perchlorate and the VOC concentrations is useful for the design of the treatment plant that will treat groundwater from each of the production wells. The variability analysis focuses on perchlorate and the chlorinated VOCs because they are the primary chemicals of interest identified for these wells.

This evaluation assumes that the prevailing hydrogeological conditions during collection of the historical data (i.e., when production wells were pumping) will not be altered significantly in the future when the wells are pumping again. Moreover, the projection of variability of the

perchlorate and VOCs does not consider potential future source removal or source control measures for these chemicals; however, a correlation with JPL monitoring wells, which have been impacted by source removal activities, is provided to estimate peak concentrations for system design.

Graphs showing concentration versus time trends are provided in Figures 3-1 through 3-7. For the Arroyo (Figure 3-1), concentrations of perchlorate and the VOCs start to increase after the well was shut down in 1997. Well 52 had similar increasing trends after 1997 up until 2000 when concentrations began to decrease (Figure 3-2). The Ventura well (Figure 3-3) and the Windsor well (Figure 3-4) generally show increasing concentrations for perchlorate, TCE, and PCE after 1997. A general decreasing trend in concentrations of these chemicals is observed in the LAWC wells (Figure 3-5), apparently because Well 52 and other City of Pasadena production wells were not operating (PWP, 2003). Concentrations of perchlorate in the Rubio Cañon wells (Figure 3-6) have decreased, while the VOC concentrations have consistently remained below detection limits. For the Las Flores well (Figure 3-7) perchlorate concentrations are decreasing, while the PCE concentrations are on an upward trend.

Although it is difficult to accurately predict future analyte trends in the capture zones of the production wells due to changing groundwater conditions (i.e., the cessation of groundwater extraction from these production wells and other nearby extraction wells, and changes in the amount of recharged groundwater in the Arroyo Seco), concentration trends from JPL monitoring wells located at the perimeter of the site and off-site can be used to provide an indication of the magnitude and trends in concentrations for the capture zones.

As discussed in Section 2.2.1.5, concentration trends were provided for monitoring wells MW-3, MW-4, MW-10, MW-17, MW-18, and MW-19 (Figures 2-19 through 2-24). This group of wells consists of both perimeter off-facility wells and off-facility wells, which were selected based on their location within the capture zone of the four Monk Hill wells (Arroyo, Well 52, Ventura, and Windsor). Based on the individual well concentration trends it may appear that certain contaminants exhibiting concentration increases would adversely impact future concentrations of groundwater in downgradient wells; however, based on the levels of chemicals observed in the JPL wells, future concentrations within the capture zones are not expected to exceed historical concentrations of the production wells. As stated previously in Section 2.1.1.3, groundwater flow conditions are affected by various natural and anthropogenic influences and therefore, in order to better characterize groundwater conditions beneath JPL, data from the groundwater monitoring wells were grouped according to location and magnitude of concentrations detected. Group C wells are perimeter wells and have varying concentrations (MW-1, MW-2, MW-3, MW-4, MW-5, MW-9, MW-10, MW-12, MW-14, and MW-15), whereas Wells in Group D are located off site, near production wells and tend to have varying concentrations (MW-17, MW-18, MW-19, MW-20, MW-21, and MW-25). Figure 2-25 provides the average annual concentration trends for four chemicals frequently detected in groundwater in JPL monitoring wells located within each well group. Average annual concentrations shown on these figures were derived by averaging concentrations for each of the four chemicals across wells/well screens within each well group for each year since long-term groundwater monitoring began at JPL. The concentration trends observed in monitoring well Groups C and D would most likely reflect the trends in the capture zones of the production wells. As shown on Figure 2-25, concentrations are generally decreasing over time, but punctuated by occasionally elevated concentration spikes of perchlorate.

In summary, it is difficult to accurately predict future analyte trends in the capture zones of the production wells due to changing groundwater conditions (i.e., the cessation of groundwater extraction from these production wells and other nearby extraction wells, and changes in the amount of recharged groundwater in the Arroyo Seco). However, the concentrations are expected to decrease in the future because of cleanup activities NASA is currently conducting for soil and on-facility groundwater, which are discussed in Section 4.0.

3.2.1 Nitrate Evaluation

Nitrate concentrations over time in the production wells located in the Monk Hill Subarea were evaluated and a Technical Memorandum developed in November 2005 (NASA, 2005b). A copy of the Technical Memorandum is included in Appendix C. The production wells evaluated included Arroyo, Well 52, Ventura, Windsor, LAWC Wells #3 and #5, Rubio Cañon Wells #4 and #7, Las Flores Well #2, and the four Valley Water Company Wells. In addition, nitrate concentrations over time were plotted for select JPL wells located near or downgradient of the various production wells.

The nitrate evaluation was conducted to try to determine why nitrate concentrations in the PWP wells began increasing after operation of the wells stopped. Nitrate concentrations in other Monk Hill wells located upgradient (i.e., Valley Water Company wells) and downgradient of the Pasadena Monk Hill wells have remained relatively consistent before and since the Pasadena Monk Hill wells were taken offline. Considering these data, an increasing nitrate trend in the basin does not seem possible to explain nitrate increases in Pasadena's Monk Hill wells after 2002.

As discussed in the Technical Memorandum (Appendix C), one possible explanation to consider is the association of nitrate concentrations and groundwater flow pathways. Based on the historical nitrate concentration data for the Pasadena Monk Hill wells (Appendix C, Figure 1), nitrate concentrations in Well 52, Ventura, and Windsor were relatively consistent, and in general, were below the state drinking water levels when all three wells were operating. The reason for this consistent nature may be attributed to the rather large areas of influence these wells have while pumping (Appendix C, Figures 12 and 16). Thus, groundwater from the areas of higher nitrate concentrations (i.e., Valley Water Company wells and the La Cañada Irrigation District) are combined with the groundwater from areas of lower nitrate concentrations (i.e., from the north and northeast portions of the basin). After the wells were shut down in 2002, nitrate concentrations increased (Appendix C, Figure 1) because the natural groundwater flow to the southeast was reestablished. As evidenced on Figures 10 and 14 in Appendix C, when the Pasadena wells are not pumping, groundwater flow is to the southeast; thus, groundwater from the areas of higher nitrate concentrations (i.e., Valley Water Company wells and the La Cañada Irrigation District) naturally flows towards the Pasadena wells.

Based on the results of the groundwater flow evaluation provided in the Technical Memorandum (Appendix C), it is anticipated that nitrate concentrations comparable to historical concentrations (before 2002) will be observed once the production wells have been in operation for some period of time.

3.3 Estimates of Raw Water Quality for Water Treatment Plant Influent

Multiple production wells, rather than one well, will more than likely be used at a water treatment plant. Therefore, for this evaluation, the influent streams are assumed to be comprised of the water extracted from the number of wells included at the water treatment plant. As such, the nine production wells have been grouped accordingly, to form five separate influent streams as follows:

- The Arroyo Well and Well 52
- The Ventura and Windsor Wells
- The Lincoln Avenue wells
- The Rubio Cañon wells
- The Las Flores well.

3.3.1 Identification of Chemicals

Raw water quality for water treatment plant influent is characterized by evaluating the water quality within the various capture zones described in the SWA (Figures 2-13 through 2-16). Chemicals expected to be present in each of the influent streams consists of those chemicals frequently present in each production well based on historical data (Tables 3-1 through 3-9) as well as those chemicals identified in the source water assessment as potentially impacting groundwater within the capture zones (Table 2-25). Chemicals identified on Table 2-25 as potentially impacting groundwater are very similar to the chemicals frequently detected in the production wells and include chlorinated VOCs, perchlorate, several naturally occurring constituents, and several emerging constituents. The emerging chemical constituents detected in JPL monitoring wells were not included as sampling anlaytes during the historical sampling events for the production wells. Therefore, it was assumed that emerging constituents detected in JPL monitoring wells during the comprehensive monitoring event were located within a specific capture zone of a production well and would be potentially present within the influent for the production well. Table 2-6 summarizes the detections of these emerging compounds in JPL monitoring wells. The capture zone analysis was discussed in Section 2.1.3 and Figures 2-13 through 2-16 depict the groundwater flow fields for each of the production wells. The JPL monitoring wells located within, or most represented by, each of the production well capture zones are as follows:

- The Arroyo Well and Well 52 – MW-3, MW-4, MW-5, MW-10, MW-17, and MW-18
- The Ventura and Windsor Wells – MW-19
- The Lincoln Avenue wells – MW-17
- The Rubio Cañon wells – MW-17
- The Las Flores well – none.

If an emerging chemical was detected in a monitoring well located within the capture zone of a production well, then that emerging chemical is assumed to be potentially present in the production well and thus designated as a chemical of potential concern (COPC) for the influent to the water treatment plant. Table 3-10 summarizes the chemicals potentially present in each of the influent streams based on a review of the historical production well data and the source water assessment.

3.3.2 Estimated Concentrations of Chemicals in the Influent Streams

Chemical concentrations in the influent stream (i.e., the combined extracted water from the production wells) were estimated by either: (1) using historical production well data; or (2) using historical production well data supplemented with JPL monitoring data for wells located within the capture zone of the production well (i.e., for estimation of emerging chemical concentrations). Estimation of water quality using water quality data from JPL wells located within each of the respective capture zones was intended to provide conservative results. The primary assumptions of the approach used to estimate water quality are: (1) chemicals detected in the JPL wells also will be present in the respective production well, and (2) concentrations of these chemicals in JPL wells will be representative of the concentrations in the production wells. The primary uncertainty associated with this approach is that the number of monitoring wells included in the capture zone provides only a rough estimate of the lateral and vertical variability in chemical concentrations and does not take into account the fact that some hydrogeologic units produce more groundwater than others. The method provides a conservative estimate of chemical presence and concentration. Assumed average time-weighted extraction rates (Table 2-1) for the production wells during system operation also were used where appropriate (i.e., when two wells were combined to estimate the influent) to estimate chemical concentrations in the influent (see Equation 1).

$$\text{Influent} = \frac{\left(\text{Avg}_{\text{well 1}} \times \text{flow rate}_{\text{well 1}}\right) + \left(\text{Avg}_{\text{well 2}} \times \text{flow rate}_{\text{well 2}}\right)}{\text{flow rate}_{\text{well 1}} + \text{flow rate}_{\text{well 2}}} \qquad (1)$$

The data used to estimate chemical presence and concentration for each of the influent streams are discussed in detail in Sections 3.3.2.1 through 3.3.2.5. The arithmetic mean is the primary statistic used in the discussions of the estimated water quality of the treatment plant influent. This value is considered to be appropriate because the production wells draw from the entire capture zone in which the monitoring wells are located and the groundwater is mixed in the well as it is discharged. Calculation of these statistical parameters incorporated one-half of the quantitation limits for all nondetect values and used averages of duplicate analyses. Estimated concentrations of constituents in the influent streams are summarized on Tables 3-11 through 3-15. Based on the monitoring data from nearby monitoring wells and the LAWC production wells, it is anticipated that influent concentrations most likely will be less than historical averages; however, production wells may encounter a concentration pulse from time to time in which case estimated influent concentrations may be more in line with historical averages. Chemicals identified for a particular influent are designated as "chemicals of concern" (COCs) and "chemicals of potential concern" (COPCs). COCs are defined as chemicals expected to be present in the influent stream because those chemicals had been and/or continue to be frequently present in each production well based on historical trend data. The COPCs are those chemicals identified in the source water assessment as potentially impacting groundwater within the capture zones. COPCs also include water quality and other parameters that may impact the design of the water treatment system.

3.3.2.1 Arroyo Well and Well 52

The estimated influent concentrations for constituents potentially present in the water extracted from the Arroyo and Well 52 are summarized in Table 3-11. Influent concentrations were determined by multiplying the average concentrations of each constituent detected in each well

(Table 3-1 for the Arroyo and Table 3-2 for Well 52) by the average flow rate of that well, summing these numbers together and dividing by the total flow rate (refer to Equation 1). As shown on Table 2-1, an average flow rate of 148 acre ft/month was used for Arroyo and 121 acre ft/month was used for Well 52. Historical data from the two production wells do not exist for the "emerging" COPCs and chlorate; therefore, analytical data from JPL wells (MW-3, MW-4, MW-5, MW-10, MW-17, and MW-18) within the capture zone were used to estimate these concentrations.

Because there was only one year of data for the perchlorate in the Arroyo well, during which it appears that a contaminant pulse was intercepted by the well, using the average of just that period may have over-estimated the influent concentrations. Basing the average on a period of contaminant spikes generates what may be a worst case scenario, and the true average concentration encountered may be considerably less.

3.3.2.2 Ventura and Windsor Wells

Chemical concentrations in the treatment plant influent for Ventura and Windsor Wells, as shown on Table 3-12, were estimated by combining the average historical data from both production wells (Tables 3-3 and 3-4) and supplementing with data obtained from JPL well MW-19 for chlorate and the emerging constituents. Influent concentrations were determined by multiplying the average concentrations of each constituent detected in each well by the average flow rate of that well, summing these numbers together and dividing by the total flow rate (refer to Equation 1). As shown on Table 2-1, an average flow rate of 108 acre ft/month was used for Ventura and 94 acre ft/month was used for Windsor.

3.3.2.3 LAWC Well #3 and Well #5

Chemical concentrations in the treatment plant influent for the Lincoln Avenue wells were estimated by combining the data from LAWC #3 and LAWC #5 (Tables 3-5 and 3-6). Influent concentrations were determined by multiplying the average concentrations of each constituent detected in each well by the average flow rate of that well, summing these numbers together and dividing by the total flow rate (refer to Equation 1). As shown on Table 2-1, an average flow rate of 40 acre ft/month was used for LAWC #3 and 44 acre ft/month was used for LAWC #5. Table 3-13 provides the estimated water quality of the treatment plant influent for these wells.

3.3.2.4 Rubio Cañon Well #4 and Well #7

Expected chemical influent concentrations for the Rubio Cañon Land and Water Association treatment plant were estimated by combining the data from Rubio Cañon Wells #4 and #7 (Tables 3-7 and 3-8). The expected influent concentrations were calculated by taking the sum of the average concentration of each detected constituent, multiplied by the average flow rate for that well, and then dividing by the total flow rate of both wells (refer to Equation 1). As shown on Table 2-1, an average flow rate of 39 acre ft/month was used for Rubio Cañon Well #4 and 78 acre ft/month was used for Rubio Cañon Well #7. Table 3-14 provides the estimated water quality of the treatment plant influent for the Rubio Cañon wells.

Perchlorate has been detected at the Rubio Cañon wells above the MCL, but has been identified as a COPC.

3.3.2.5 Las Flores Well #2

The Las Flores Water Company has one production well. Therefore, the expected influent concentration for detected constituents was calculated using the average detected concentration for Las Flores Well 2 (Table 3-9) except for PCE. Because PCE concentrations have decreased considerably since 2004, the more recent analytical results for this production well (January 2005 through May 2009) were used to calculate the expected influent concentration. Table 3-15 summarizes the expected influent concentrations for the Las Flores Water Company for the COPCs. Nitrate and perchlorate are known COCs at Los Flores; a permitted nitrate/perchlorate blending plan is already in place.

3.6 Summary

The primary goal of this section was to estimate the concentrations of the chemicals expected to be present in the influent of the water treatment plants. Raw water quality was first evaluated by examining the historical monitoring data associated with each of the nine production wells. These historical data represent the best estimate of raw water quality for these production wells when extraction is resumed. The historical raw water quality is further characterized by examining the variability of chemical concentrations with respect to time and a correlation with concentrations observed for the JPL monitoring wells as discussed in Section 3.2.

Because a water treatment plant is more likely to be installed to handle multiple production wells, as opposed to installing one plant per production well, the raw water quality potentially associated with the influent to each of the water treatment plants proposed for the JPL remedial action is characterized by evaluating the water quality within the various capture zones described in the SWA. Chemicals expected to be present in the water extracted from the production wells consists of those chemicals historically present as well as those chemicals identified in the source water assessment as potentially impacting groundwater. This evaluation serves as a way to estimate the water quality based on the presence of chemicals in the source water that potentially may be impacting groundwater within the capture zones. As stated previously, it is reasonable to expect influent concentrations less than historical average most of the time; however, one or more Monk Hill production wells may encounter a concentration pulse from time to time. For active wells, recent concentration data are best, but data from upgradient monitoring wells may be used to anticipate future pulses and trends.

The Arroyo Well, Well 52, Ventura Well, and Windsor Well currently are closed and representative groundwater samples cannot be collected until these wells are refurbished and in operating condition. For purposes of this report, the quality of the water extracted from these production wells when the treatment system begins was estimated using historical data from the wells and current data from select JPL wells located within the capture zone of each production well were used in place of actual sampling for particular emerging constituents that were never analyzed for in these production wells. Because the Lincoln Avenue, Rubio Cañon, and Las Flores wells continue to operate as production wells, current groundwater data for these wells were used to compare to historical data. If the recent data were significantly different from the historical data, then the recent data were used to estimate influent concentrations. The groundwater data were evaluated for the presence of known and potential chemicals, concentrations of these chemicals, and specific water quality parameters that may potentially affect treatment plant design and/or end-use options for the treated water.

Analytes that may impact design and/or operation of the City of Pasadena Monk Hill Subarea treatment system also were included in the influent estimates. Some of these analytes are a concern because they could also be adsorbed by the ion exchange media, which could cause sooner than expected perchlorate breakthrough, thereby increasing operating costs. Other analytes (i.e., silica) may cause scaling or fouling of the media which will increase pressure drop across the beds and eventually require change out of the media. The other general water quality data (e.g., bicarbonate and alkalinity) can be used to determine the need for pretreatment to eliminate scaling problems with the system. Disposal costs/options could also be impacted due to the accumulation of radionuclides or metals on the treatment media (these are addressed in Section 5.0).

4.0 Source Protection

CDPH requires that the source(s) of chemicals in groundwater must be controlled to prevent chemical levels from increasing and to minimize the dependence on treatment. For groundwater extracted from the Monk Hill Subarea, source protection will be achieved by:

- Best management practices for waste handling and waste reduction at the JPL facility.
- Remedial action within the JPL facility (i.e., on-facility groundwater [OU-1] and on-facility soil [OU-2] at JPL).
- Additional protection activities at other sources within the Subarea.
- A communication plan involving NASA, the City of Pasadena, EPA Region 9, RWQCB, California DTSC, CDPH, and other interested parties including PWP, LAWC, Rubio Cañon, and Las Flores.

These source protection measures are discussed in detail in the following subsections.

4.1 Best Management Practices for Waste Handling and Management

Management programs for waste handling and reduction are required under local, state, and Federal regulations. Specifically, any facility within the source water area meeting the requirements of these regulations must comply with them. Compliance with these regulations is intended to be protective of the environment.

All waste disposal activities at JPL comply with stringent Federal and California regulations. JPL also takes steps to reduce the amount of wastes it produces and to recycle whenever possible. The use of seepage pits for sanitary and chemical waste disposal was common in the late 1950s. Currently, laboratory chemical wastes are either recycled or sent off site for treatment and disposal at licensed, regulated facilities.

Specific information as to how applicable local, state, and Federal regulations are being applied at JPL to control or prevent chemical levels from increasing in the environment, particularly as it relates to remedial actions, is further addressed below.

4.2 Remedial Actions for OU-1 and OU-2

In October 1992, JPL was placed on the NPL. As an NPL site, JPL is subject to the provisions of CERCLA as amended by SARA of 1986, hereafter jointly referred to as CERCLA. In accordance with CERCLA requirements, remedial investigations were completed at the JPL site to characterize the nature and extent of chemicals in on-facility groundwater (OU-1) and soil (OU-2) identified in studies prior to and during the RIs.

NASA's cleanup plan for JPL includes concurrently addressing remediation of soil and groundwater. Summaries of the remedies are described below.

4.2.1 OU-1

After being placed on the NPL, the nature and extent of chemicals in groundwater were investigated during the RI, which lasted from 1994 to 1998 (FWEC, 1999a; FWEC, 1999b). Additional groundwater data have been obtained from a long-term groundwater monitoring program in place at the facility since August 1996, which continues to be active. Based on the data collected during the RI and long-term groundwater monitoring, two VOCs (carbon tetrachloride and TCE) and perchlorate have been detected consistently in the source area at concentrations significantly exceeding their respective state or Federal MCLs. The highest concentrations of carbon tetrachloride and perchlorate at the JPL site are located in the north-central portion of the JPL facility, which is referred to as the "source area." The source area is the location where the majority of chemicals is dissolved in the groundwater, and is defined as an 8-acre by 100-ft-thick portion of the aquifer.

In the late 1990s and early 2000, NASA conducted pilot testing of several technologies to address dissolved perchlorate in source area groundwater. The technologies tested included reverse osmosis, an FBR, packed bed reactors, in situ bioremediation, and ion exchange (FWEC, 2000; NASA, 2003). Due to the depth and extent of the chemicals in groundwater, in situ (below ground) treatment is not cost-effective at the JPL facility; therefore, groundwater must be pumped from the ground, treated aboveground, and reinjected.

Based on these studies, NASA installed a demonstration treatment plant located on JPL in the source area in early 2005 (NASA, 2003b; NASA, 2005a). The demonstration study area location is illustrated in Figure 4-1. The demonstration study consists of two extraction wells, two injection wells, LGAC treatment to remove VOCs, and an FBR to remove perchlorate, as depicted in Figure 4-2. This system was successful in the demonstration phase, so NASA prepared the Interim Record of Decision (ROD) (NASA, 2006a) and Remedial Design/Remedial Action (RD/RA) Work Plan (NASA, 2006b) for system expansion.

Construction associated with the system expansion was initiated in February 2007 and completed in January 2008. The as-built conditions of the demonstration system are documented in an installation report (NASA, 2008a). This report documents the as-built conditions of the source area groundwater treatment expansion completed in January 2008. System expansion consisted of one additional extraction well (JPL-EW-03), one additional injection well (JPL-IW-03), new piping, and associated equipment. Figures 4-1 and 4-2 show the limits of demonstration study area and expansion area.

The LGAC system performance is evaluated based on influent and effluent VOC concentrations by sampling the midpoint between the two LGAC units to assess breakthrough and the LGAC replacement frequency. The FBR system performance is evaluated primarily based on influent and effluent nitrate and perchlorate concentrations. Other parameters, such as pH, oxygen reduction potential (ORP), dissolved oxygen (DO), sulfide, and total organic carbon (TOC), are monitored at the post-aeration tank to track its operation. The multimedia filters are monitored to track electron donor degradation and its removal efficiency for suspended solids.

As summarized in the OU-1 Source Area Treatment System Progress Report (NASA, 2009), the total cumulative chemical mass removed by the OU-1 system through the end of February 2009 was estimated at 1140 lbs of perchlorate, 26 lbs of carbon tetrachloride, and approximately 5 lbs of TCE. Impacts to the underlying groundwater plume include the following:

- The concentration of VOCs and perchlorate in the treatment zone (i.e., MW-7, MW-16, and MW-24) has decreased significantly since system startup.
- Concentrations of TCE in the treatment zone are below 1 μg/L in all wells.
- Concentrations of CCl_4 were below 0.5 μg/L in all source area wells in Oct./Nov. 2008.
- Perchlorate concentrations in MW-7 and MW-24 have declined from 4,810 and 4,880 μg/L to concentrations of less than 1.0 μg/L and 5.8 μg/L, respectively.
- Perchlorate levels in MW-13 were measured at 431 μg/L in Oct./Nov. 2008. Perchlorate concentrations in MW-13 have been sporadic since initiating operation of the OU-1 treatment system. It is believed that this is a result of changes in groundwater flow paths during system operation.
- Concentrations of VOCs and perchlorate have declined or remained the same in the wells near the facility's eastern (MW-11) and western boundary (MW-22 and MW-23).

4.2.1.1 Regulatory and Legal Considerations

To implement the expanded treatability study, various regulatory issues and legal considerations were examined in regard to the injection of treated groundwater. Because the JPL is on the NPL, the site is subject to the provisions of CERCLA as amended by SARA. As such, Federal regulations and policy governing reinjection of water into the subsurface will be adhered to, in conjunction with complying with the substantive requirements of state regulations and policy (EPA, 1992). Legal considerations of reinjection must also be examined because the JPL facility is located in the adjudicated Raymond Basin Watershed.

Federal Regulations and Policy

Section 3020 of the Resource Conservation and Recovery Act (RCRA) applies to the underground injection in the context of RCRA and CERCLA cleanups. RCRA section 3020(a) bans underground injection into or above a geologic formation that contains an underground source of drinking water. However, RCRA section 3020(b) exempts JPL from that ban provided that certain conditions are met (EPA, 2002). These conditions include the following:

- The reinjection is part of a response action under section 104 or 106 of CERCLA, or part of RCRA corrective action intended for site cleanup;
- The groundwater is treated to substantially reduce chemicals prior to such reinjection; and
- The cleanup will, upon completion, be protective of human health and the environment.

The second bullet above means that treatment must occur before reinjection; however, the substantial reduction of the chemicals in the groundwater can occur either before or after reinjection of the groundwater (EPA, 2000).

The applicability of RCRA land disposal restrictions (LDRs) to groundwater reinjection performed during a RCRA corrective action or CERCLA response action is also a consideration

(see RCRA sections 3004 (f), (g), and (m), and 40 Code of Federal Regulations (CFR) Parts 148 and 268). Groundwater undergoing reinjection may contain regulated chemicals; thus, the issue could be raised as to whether reinjection of groundwater should meet treatment standards identified as best demonstrated available technology (BDAT). An interpretation of the applicability of the RCRA LDRs is provided in an EPA memorandum titled "Applicability of Land Disposal Restrictions to RCRA and CERCLA Ground Water Treatment Reinjection" (EPA, 1989). This memorandum explains that, even though the LDR provisions address the same activity as RCRA section 3020, EPA interprets the provisions of RCRA section 3020 to be applicable instead of LDR provisions (EPA, 1989). Another potential issue is whether LDR treatment standards are relevant and appropriate for treated groundwater that is reinjected as part of a CERCLA response action. The EPA believes that the ultimate purpose of treatment is to restore the groundwater to drinking water conditions; thus, standards that have been developed to establish drinking water quality levels (e.g., MCLs) are to be used (EPA, 1989). Therefore, promulgated drinking water standards should be used where available. If no promulgated drinking water standard exists, then relevant and appropriate requirements such as health-based standards or LDR treatment standards should be used (EPA, 1989).

State Regulations and Policy

General waste discharge requirements (WDRs) associated with groundwater reinjection during remedial activities are provided by the California RWQCB Los Angeles Region in Order No. R4-2002-0030, General Waste Discharge Requirements for Groundwater Remediation at Petroleum Hydrocarbon Fuel and/or Volatile Organic Compound Impacted Sites (RWQCB, 2002). These general WDRs are applicable to in situ groundwater remediation or the extraction of groundwater with aboveground treatment and reinjection of treated groundwater to the same aquifer zone. The requirements contained in Order No. R4-2002-0030 are consistent with all water quality control policies, plans, and regulations in the California Water Code (CWC) and the revised Water Quality Control Plan (Basin Plan) for the Los Angeles Region (RWQCB, 1994). The general WDRs are intended to protect and maintain the existing beneficial uses of the receiving groundwater (RWQCB, 2002) and are consistent with the anti-degradation provisions of State Water Resources Control Board Resolution No. 68-16. RWQCB Order No. R4-2002-0030 requires that groundwater reinjection shall not adversely impact the receiving groundwater in terms of water quality and chemical concentrations at a "compliance point, downgradient outside the application area." Discharge limitations for pH, mineral content, coliform count, salts, heavy metals, organic pollutants, and nitrogen content, as well as taste and odor, are described in the general WDRs. Similarly, discharge limitations for chemical constituents are MCLs specified in Title 22 of the California Code of Regulations, which are incorporated in the Basin Plan on Table 64431-A of section 64431 (inorganic chemicals), Table 64431-B of section 64431 (fluoride), and Table 64444-A of section 64444 (organic chemicals).

Application of Federal and State Regulations

Groundwater reinjection activities associated with the aboveground LGAC adsorption and FBR treatment will be in compliance with Federal regulations and policy surrounding RCRA section 3020(b) and the substantive requirements of state regulations and policy surrounding RWQCB Order No. R4-2002-0030. Following Federal regulatory guidelines, the ex situ biological treatment of groundwater proposed at JPL will be done to substantially reduce chemical concentrations prior to reinjection, and the cleanup will be protective of human health and the

environment. The electron donor to be used will be the same as, or similar in nature to, carbon sources/electron donors listed in RWQCB Order No. R4-2002-0030, Provision A(c)(4).

Legal Considerations

JPL is located in the Monk Hill Sub-Basin of the Raymond Basin. In 1944, the Superior Court of California approved the Raymond Basin Judgment, which adjudicated the rights to groundwater production to preserve the safe yield of the groundwater basin. Adjudication refers to the practice of land owners and other parties allowing the courts to settle disputes over how much groundwater can rightfully be extracted. The courts determine an equitable distribution of water that will be available for extraction each year. In these adjudicated groundwater basins, the courts appoint a Watermaster to administer the court judgment. The Raymond Basin Management Board, made up of representatives of the water purveyors, oversees the management and protection of the Raymond Basin. A total of six Raymond Basin water purveyors operate wells within four miles of JPL. Because the expanded treatability study includes the extraction of groundwater and NASA does not have water rights under the Raymond Basin Judgment, extracted groundwater will be reinjected into the same aquifer. Battelle has coordinated with NASA, the Navy, and the Raymond Basin Management Board regarding specific reporting requirements associated with reinjection.

4.2.2 OU-2

During the 1940s and 1950s, various chemicals, including VOCs, were used at the JPL facility and disposed in subsurface seepage pits. This disposal practice led to VOCs in soil and soil vapor at levels requiring cleanup. RI activities between 1994 and 1998, revealed four VOCs that were frequently detected in soil vapor samples at elevated concentrations: carbon tetrachloride (CCl_4), 1,1,2-trichloro-1,2,2-trifluoroethane (Freon™113), TCE, and 1,1-DCE. The VOCs were located in soils within the JPL fence line (referred to as the vadose zone), and were detected at depths extending to the groundwater table.

Based on these findings and a review of possible technologies, pilot testing of SVE was initiated in 1998 to remove VOCs from the vadose zone. The pilot test was successful and NASA proposed to proceed with this alternative to address the removal of VOCs in soils. Following public comment, a ROD was finalized for OU-2 in September 2002, identifying SVE as the selected remedial alternative. The selected remedy for OU-2 provided clean up of the vadose zone soil to prevent the migration of VOCs from soil to groundwater and to be protective of the beneficial uses of groundwater. JPL is located within the Raymond Basin Watershed, which is a current source of drinking water.

The SVE system consisted of four vapor extraction wells located within the JPL fence line and a mobile treatment unit. A trailer-mounted SVE unit was operated at each well location on a rotating basis, and the extracted vapor was treated using granular activated carbon (GAC) prior to being discharged to the atmosphere in accordance with state air quality requirements. The soil cleanup remedy also included a soil vapor monitoring program which was used to evaluate SVE system effectiveness and remedial progress.

The SVE system was operated from April 1998 (beginning as a pilot test) through September 2005. The locations of the vapor extraction wells are shown on Figure 4-3. VOC mass removal rates by the SVE system and VOC concentrations in soil vapor have decreased dramatically over the past eight years. The SVE system removed a total of approximately 260 lb of VOCs

from the vadose zone soil. Importantly, all of the performance objectives established in the ROD for the SVE system have been achieved. As such, continued operation of the system is no longer effective.

Since startup of the SVE system, including the pilot test, a total of approximately 260 lb of VOCs have been removed from the vadose zone soil (NASA, 2007c). Since December 2001, the SVE system has operated effectively, achieving a greater than 95% runtime efficiency, design flowrates, and effective radius of influence.

Figures 4-4 and 4-5 depict the cumulative reduction mass removal for carbon tetrachloride and TCE, respectively, based on analytical data collected as part of the soil vapor monitoring program. Figure 4-6 shows the cumulative VOC mass removal and influent VOC concentrations over time.

No post-construction operation and maintenance activities will be required for the onsite vadose zone soil as part of OU-2. Residual VOC mass remaining in the soil will be managed as part of the on- and offsite groundwater remedies under OU-1 and OU-3, respectively. Currently there is a quarterly groundwater monitoring program in place and an onsite groundwater treatment system is installed and operating. The offsite groundwater treatment plant is currently in the remedial design stage.

4.2.2.1 CERCLA AND NCP Requirements

Development of a remedial action objective (RAO) for OU-2 included consideration of applicable or relevant and appropriate requirements (ARARs) in accordance with CERCLA, as amended by SARA and the National Contingency Plan (NCP). The RAO for OU-2 is to prevent, to the extent practicable, further migration of VOCs at potential levels of concern from the vadose zone to groundwater to protect an existing drinking water source. Section 121(d) of CERCLA (CERCLA, 42 United States Code [USC] Section [§] 9621[d]), as amended, states that remedial actions on CERCLA sites must attain (or the decision document must justify the waiver of) any Federal or more stringent state environmental standards, requirements, criteria, or limitations that are determined to be legally applicable or relevant and appropriate.

Appendix F of the Final RODs and Remedial Action Plan for OU-2 (NASA, 2002) contains an evaluation of ARARs that apply to OU-2. They include the Safe Drinking Water Act; various resolutions, guidance documents, and plans set forth by the RWQCB; the Federal Facilities Compliance Act; Executive Order 11988 (Protection of Floodplains); the Archaeological Resources Protection Act; the National Historic Preservation Act; the Clean Air Act; various regulations set forth by the South Coast Air Quality Management District; and the RCRA.

4.3 Other Source Protection Activities

Source protection activities are in progress at other potential sources identified in the source water assessment. These activities include:

- Efforts in La Cañada-Flintridge to obtain sanitary sewer connections at unsewered residences (potential sources of nitrate and PCE).
- MWD efforts to blend water from Northern California and the Colorado River to reduce perchlorate.

- California efforts associated with landfill/disposal areas.

4.3.1 La Cañada-Flintridge

The City of La Cañada-Flintridge is located in the San Gabriel Valley in the County of Los Angeles and is approximately 8.6 square miles in size (Willdan, 2003). This city is one of a few communities within the greater Los Angeles region that still relies on septic systems for sewage disposal. Of 6,989 homes in the area, only 2,218 units are served by a central sewage system, and many of the systems outside the central system are aged and failing (Willdan, 2003). The La Cañada-Flintridge Department of Public Works continues to receive numerous reports of septic overflows and failures annually. Septic overflows and system failures lead to sanitary and public health concerns, including the potential for contamination of drinking water supplies when sewage collects around water lines.

In 1997, La Cañada-Flintridge began to make sanitary sewer collection systems available to its residents. A report by Willdan (2003) describing the sewer collection system updates that are in progress for the city is entitled, *La Cañada-Flintridge Sewer Collection System – Areas 3A, 3B, 4, and 5 Draft Initial Study, Environmental Checklist, and Mitigated Negative Declaration*.[3] Therefore, maintenance and overflow of private sanitary systems will be eliminated.

Until recently, the residential areas of La Cañada-Flintridge have not had access to municipal sewer services. The Foothill Trunk Sewer, which serves the business district, was constructed by the County Sanitation District in 1996. The City is working through a long-range master plan to provide sewer services to all remaining properties. In its continuing efforts, the City's goal is to expand and improve the City wide wastewater collection and transmission system for the future Sewer Project Areas 4, 5 and 6. Sewer Master Plan Area 1, constructed as Assessment District 98-1, was completed in 1999. Sewer Master Plan Area 2, constructed as Assessment District 02-1, was completed in Summer 2005. Sewer Master Plan Areas 3A & 3B, constructed as Assessment District 04-1, were completed in June 2008. The Foothill Trunk Sewer is maintained by the County Sanitation District. Sewer mains in Areas 1, 2 and 3 are maintained by the Los Angeles County Department of Public Works under contract with the City.

In addition to the sanitary and public health concerns of sewage overflow, the presence of PCE and elevated concentrations of nitrates in regional groundwater (e.g., Verdugo Basin, upgradient and along Foothill Boulevard) have been associated with historic uses of cesspools and septic systems in the La Cañada-Flintridge area. PCE was used as a septic system cleaner, whereas nitrates are byproducts of wastes contained within the septic systems.

4.3.2 MWD

Water from MWD is imported from Northern California and the Colorado River, with most of the water obtained from the Colorado River. Low levels of perchlorate were detected in the Colorado River and Lake Mead in 1997. A major perchlorate spill in 1997 by Kerr McGee Corporation impacted the Las Vegas Wash, a tributary to Lake Mead and the lower Colorado River. As reported by Dickerson (2003), initial concentrations in the Las Vegas Wash area were as high as 3,700,000 µg/L, and concentrations in Lake Mead were diluted down to 10 µg/L.

---

[3] This report can be downloaded from http://www.lacanadaflintridge.com/city/documents/sewer_docs/R01_4_30_03.pdf.

In order to ensure perchlorate levels are below California's MCL of 6 µg/L, MWD blends water from the Colorado River with water obtained from Northern California sources. Based on a 1999 public health assessment conducted by ATSDR (1999), it was determined that sampling and well water blending procedures used by the drinking water purveyors near JPL helped to prevent any potential present or future public health hazards posed by perchlorate in groundwater. Therefore, blending of water is an important preventive measure used by MWD to address water quality issues.

MWD announced that on April 17, 2002, a new remediation system installed under the direction of the Nevada Division of Environmental Protection (NDEP) intercepts additional groundwater contaminated with perchlorate (Dickerson, 2003). The NDEP reports that perchlorate entering the environment has been reduced by 85% since 1997 and as of April 2005, 1574 tons of perchlorate have been removed from the environment and perchlorate levels monitored in the Lower Colorado River are below the safety limit set by EPA in February 2005 (NDEP, 2006). This remedial effort is another preventive measure that addresses future water quality issues.

4.3.3 Former Landfills/Disposal Areas

At least three known former landfills/disposal areas and one active landfill are located within the Monk Hill Subarea. The inactive landfills are the Millard Cañon Dump, located on Cañon Crest Road; the Lincoln Debris Disposal area, located on Loma Alta Drive; and the solid waste facility at the Los Angeles County Public Works Maintenance district, located on West Mountain View Street. The active solid waste landfill is operated by the City of Pasadena Public Works and is located on West Mountain Street. According to information provided in the Solid Waste Information System (SWIS)[4], this site is a limited volume transfer operation that accepts typical municipal waste, such as construction/demolition, green materials, and mixed municipal material. The maximum permitted throughput is 15 tons per day. Routine inspections are conducted quarterly by the local enforcement agency and there have been no violations or areas of concern reported. This is not a landfill where disposal takes place; therefore, there are no landfill design specifications. Wastes are only stored at this site prior to being shipped to another site for either recycling or disposal.

Municipal solid waste (MSW) landfills are subject to federal and state environmental regulations. Some of these regulations consist of operating criteria for landfills, test procedures for pollutants, and limitations in effluent and air emissions; a checklist summarizes pertinent federal and California environmental regulations.[5] The California Integrated Waste Management Board has commissioned a unique, two-phase, cross-media study[6] of the state's MSW landfills. Phase I of the study consists of a comprehensive, cross-media inventory and assessment of MSW landfill performance for the time period from January 1998 through December 2001. Phase II of the study consists of an assessment of the effectiveness of current regulatory requirements in controlling environmental impact over time. The study is the most comprehensive inventory ever undertaken of California landfills, involving multiple regulatory agencies in measuring the overall environmental effects of solid waste disposal in California.

---

[4] SWIS can be accessed at http://www.ciwmb.ca.gov/SWIS/.

[5] This report can be downloaded from http://www.ciwmb.ca.gov/Publications/Facilities/52002002.pdf.

[6] Information describing this study and preliminary results of this study can be downloaded from http://www.ciwmb.ca.gov/Landfills/ComplyStudy/.

4.4 Regulatory Communications Plan

The existing communications plan for JPL, formerly called the *Superfund Community Relations Plan* (NASA, 1994) and now currently referred to as the *Community Involvement Plan (CIP)* (NASA, 2006c), describes the process that is currently in place to be used as a vehicle for which the CDPH, City of Pasadena (PWP), LAWC, Rubio Cañon, and Las Flores water purveyors will be kept apprised of any new sources of chemicals in soil and/or groundwater that may potentially impact the source water of the Monk Hill Subarea.

The communications plan for JPL was developed in 1994 and updated in January 2003 and again in 2006. The 2006 update is based on NASA's extensive public outreach conducted in 2004 and 2005 including a series of individual and group interviews held during that period. The CIP is a formal plan for EPA community relation activities that occur at a Superfund site, which was developed in accordance with the EPA guidance, *Community Involvement Handbook* (EPA, 2005). The CIP summarizes the history of the site, identifies current community issues and concerns regarding the project, and summarizes site-specific activities to address these concerns. The CIP was reviewed and approved by the EPA Region 9, DTSC, and RWQCB. The community relations activities will be conducted in cooperation and close coordination with these agencies as described in the Federal Facility Agreement (FFA).

The purpose of the CIP is to lay out the mechanisms for informing and involving the public in activities and decisions related to the JPL site. Information repositories created for local residents have been established at several locations:

JPL Library (JPL Employees Only)
4800 Oak Grove Drive
Building 111, Room 104
(818) 354-4200

La Cañada-Flintridge Public Library
4545 Oakwood Avenue
La Cañada-Flintridge, CA 91011
(818) 790-3330

Altadena Public Library
600 E. Mariposa Street
Altadena, CA 91001
(626) 798-0833

Pasadena Central Library
285 E. Walnut Street
Pasadena, CA 91101
(626) 744-4052

The information repository also has been posted electronically, where files can be downloaded from the following Web site: http://cercla.jpl.nasa.gov/NMOWeb/.

The general purpose of the FFA is to ensure that the environmental impacts associated with past and present activities at the Facility are thoroughly investigated and appropriate remedial action is taken as necessary to protect the public health, welfare and the environment. In addition, the FFA establishes a procedural framework and schedule for developing, implementing, and monitoring appropriate response actions at the Facility in accordance with federal regulatory guidance and policy and applicable state law. Parties to this agreement include EPA Region 9, DTSC, RWQCB, and NASA. All parties are permitted to participate in a review and comment process for draft and final documents regarding investigation and cleanup activities at JPL. Communication among all parties (NASA, PWP, DTSC, RWQCB, EPA, CDPH, and RBMW) is managed through monthly teleconferences, quarterly meetings, and discussions, as

necessary, in between. More recently, participation in communication activities (i.e., document reviews, teleconferencing, and meetings) has been extended to CDPH, the PWP, LAWC, Rubio Cañon, and Las Flores water purveyors on matters concerning OU-3 remedial action.

Therefore, both the CIP and FFA, which have already been established at the Facility, will be used to keep residents of the City of Pasadena, PWP personnel, and the CDPH apprised of:

- Any new sources of chemicals in soil and/or groundwater
- Status of investigations occurring in the area
- Any new releases or other threats to groundwater
- Status of ongoing remediation activities
- Any other information impacting extraction wells

5.0 Effective Monitoring and Treatment

This section describes the approach that will be used to ensure that the water extracted from the four PWP drinking water supply wells (Ventura Well, Windsor Well, Arroyo Well, and Well 52), the two LAWC wells (#3 and #5), the two Rubio Cañon wells (#4 and #7), and the Las Flores well (#2) undergo effective monitoring and treatment prior to domestic use. Although VOCs and perchlorate are the primary chemicals of interest in the impaired source water, other parameters, such as inorganic, pesticide, and explosive compounds, also are considered when issuing a drinking water permit. The effectiveness of the treatment and the monitoring plan is discussed in this section, along with a description of the treatment process, operations plan, and reliability features. In addition, information is provided on the notification plan and impaired source water quality surveillance plan.

The recommended PWP, LAWC, and Las Flores treatment systems consist of treatment and/or blending for VOCs and perchlorate prior to potable use by customers within the respective service areas. Currently, there is no treatment necessary for the Rubio Cañon wells. However, if regular sampling of the water supply wells indicated that blending or centralized treatment was necessary, future treatment would be similar to that provided for the PWP, LAWC, and Las Flores wells. Details of the future blending plan or treatment system would be provided in the operating permit for the system.

5.1 PWP Treatment System

5.1.1 Treatment System Description

The four PWP wells are situated southeast and downgradient of the JPL facility. As discussed in the *Final Remedial Design/Remedial Action (RD/RA) Work Plan for the Monk Hill Treatment System (MHTS)* (NASA, 2009), these wells will pump a combined total of up to 7,000 gpm. All groundwater extracted from these public water supply wells will flow through the MHTS treatment system prior to domestic use. Water samples will be collected consistently from the treatment plant influent, at intermediate points within the plant, and the plant effluent to monitor and optimize the process, to verify the effectiveness of treatment. A sampling schedule for PWP is provided as Table 5-1.

The proposed treatment system includes two stages of chemical removal: perchlorate removal using ion exchange and VOC removal using GAC. A process flow diagram for this proposed treatment system is provided as Figure 5-1. Water from Arroyo Well, Ventura Well and Well 52 will be pumped to an equalization sump located at the Ventura Well location. Booster pumps will then be used to pump water from the equalization sump to the MHTS at the Windsor property. Water from the Windsor Well will be pumped directly from the well to the MHTS. The combined flow from Windsor Well and the equalization sump will pass through two parallel 10-micron cartridge filters to remove sediment and particulates which may be discharged from the well pumps to prevent fouling and excessive pressure drop across the treatment system. The filtered water will then be directed and distributed between four fixed bed ion exchange systems and five fixed bed GAC adsorber systems. In order for the treated water from the MHTS to be supplied as drinking water for the City of Pasadena, PWP will disinfect the water using chloramine and send the disinfected water to the Windsor Reservoir.

A complete set of design drawings for the MHTS are provided in Appendix O of the RD/RA Work Plan (NASA, 2009).

5.1.1.1 Feed Pumps

Three 250 horsepower feed (sump) pumps will be installed to transfer water to the treatment plant, across the treatment vessels and associated piping, valves, and fittings, and into Windsor Reservoir. Two pumps will be operational, pumping a total flow of 5,600 gpm from Arroyo Well, Ventura Well, and Well 52. The third pump will be in standby mode serving as a backup. The total pressure drop through the MHTS is expected to be in the range of 70 to 90 pounds per square inch (psi) (based on clean versus dirty inlet water filters). A sound enclosure will be installed around the feed pumps to ensure that the noise generated by the pumps is reduced to comply with Pasadena Municipal Code Section 9.36.100. In addition, potential vibrations associated with the pumps will be attenuated with shock absorbers and proper alignment to the satisfaction of the City of Pasadena Director of Planning and Community Development.

5.1.1.2 Inlet Water Filter

The inlet water filter system will be a triplex (three vessel) filter. Each filter will be designed with a 3,500 gpm capacity, and two filters will operate in parallel under normal flow conditions with the third serving as a backup. Each filter will contain 155 polypropylene pleated filter cartridges rated at 10 micron to prevent particles from building up in the media treatment vessels downstream. Each vessel will be 42 inches in diameter and 100 inches tall. They will be constructed of carbon steel with an NSF International (NSF)-certified, two part epoxy internal coating and rated at 150 psi at 300 ^{o}F. The filter vessels will have a full diameter top access port secured by 23 heavy duty closure bolts. The top access will have a bearing assisted davit cover lift for access to the filter elements. The filter system will be equipped with a filter vessel operation platform approximately 6 feet high and 10 feet by 25 feet, 3 inches long, which will be accessible by stairs. The platform grating will be fiberglass and the support structure will be steel with polyurethane finish paint. The expected pressure drop is 5 psi through the clean filter and 25 psi through the dirty filter.

5.1.1.3 Ion Exchange System

Following the filtration stage, the water will be directed and distributed between four fixed bed ion exchange vessel pairs. The ion exchange system header piping will be a 24-inch carbon steel pipe with a NSF-certified epoxy based interior lining. All flowrates to individual vessels will be adjusted manually.

The ion exchange system will consist of eight High Flow Modular Model 12 water treatment system vessels from Calgon Carbon Corporation (CCC). The system will be arranged with four parallel pairs of vessels, each operated in a lead/lag configuration. Each vessel will be 12-feet in diameter with an overall height of approximately 16 feet and 4 inches, and will be constructed of carbon steel. The interior surfaces of each vessel will be lined to meet requirements for certification for use in potable water systems per NSF/American National Standards Institute (ANSI) Standard 61. The structural aspects of the vessels will be sufficient to meet the Uniform Building Code (UBC) requirements for Seismic Zone 4.

Each vessel will be designed with the necessary piping connections for operation of the vessels in a lead/lag configuration, as well as for backwashing of the vessels. Conical strainers will be

installed on the effluent end of each vessel to provide protection of downstream equipment in the case of an unexpected release of media. Each vessel will also be provided with one 20-inch manway and three 2-inch sample nozzles for use with in-bed water sample probes at 25%, 50%, and 75% of the media bed depth.

Each pair of ion exchange vessels will be designed with a maximum treatment capacity of 1,750 gpm. The pressure drop across each pair of ion exchange vessels will be approximately 22.2 psi at 1,750 gpm. Each individual ion exchange vessel will contain approximately 353 cubic feet of CalRes 2109 Anion Exchange Resin, a single-use ion exchange resin for perchlorate removal. CalRes 2109 has been certified for potable water use by the Water Quality Association according to "Drinking Water System Components – Health Effects," (NSF, 1988) or drinking water system components. Perchlorate breakthrough curves are provided in Appendix F. Specifications and drawings for the ion exchange vessels and ion exchange resin are presented in Appendix G.

5.1.1.4 GAC System

Following ion exchange treatment, the water will be directed and distributed between five fixed bed GAC systems. The GAC system header piping will be a 24-inch carbon steel pipe with a NSF/ANSI-certified epoxy based interior lining. All flowrates to individual vessels will be adjusted manually.

Each GAC adsorber system will consist of two vessels operating in a lead/lag configuration. The GAC system will consist of 10 Extended Capacity Modular Model 12 Carbon Adsorption system vessels. The system will be arranged with five parallel pairs of vessels, each operated in a lead/lag configuration. Each vessel will be 12-feet in diameter with an overall height of approximately 22 feet, 7 inches, and will be constructed of carbon steel. The interior surfaces of each vessel will be lined to meet requirements for certification for use in potable water systems per NSF/ANSI Standard 61. The structural aspects of the vessels will be sufficient to meet the UBC requirements for Seismic Zone 4.

Each vessel will be designed with the necessary piping connections for operation of the vessels in a lead/lag configuration, as well as for backwashing of the vessels. Conical strainers will be installed on the effluent end of each vessel to provide protection of downstream equipment in the case of an unexpected release of GAC media. Each vessel will also be provided with one 20-inch manway and three 2-inch sample nozzles for use with in-bed water sample probes at 25%, 50%, and 75% of the carbon bed depth.

Each GAC vessel pair will be designed with a maximum treatment capacity of 1,400 gpm and an empty bed contact time of 7.5 min/bed. The pressure drop across each pair of GAC vessels at 1,400 gpm will be approximately 13.4 psi. Each individual GAC vessel will contain 40,000 pounds of Filtrasorb 300 GAC. Filtrasorb 300 GAC has been certified for potable water use by the Water Quality Association according to "Drinking Water System Components – Health Effects," (NSF, 1988) for drinking water system components. GAC specifications are provided in Appendix H. Specifications and drawings for the GAC vessels are provided as Appendix I.

5.1.1.5 Chloramination System

A disinfection system will be included as the last stage of treatment. The chloramination system is required to disinfect the treated water prior to entering the City of Pasadena

distribution system. As such, PWP is responsible for funding all aspects of design, construction, permitting, and operation associated with the chloramination system. The proposed disinfection system will consist of gas chlorine cylinders and ammonium hydroxide stored in a single cylindrical vessel.

5.1.2 Performance Standards

Overall performance of the treatment systems will be measured by samples collected from the finished water. Sampling will be conducted in accordance with CCR Title 22. CDPH may modify the Title 22 requirements or request additional monitoring, which would be outlined in the operating permit. State MCLs and NLs are primarily the controlling standards for the finished water, and these standards must be attained for the effluent from the MHTS. A listing of constituents to be monitored, analytical methods, reporting limits, MCLs, NLs, public health goals (PHGs), and monitoring frequencies is provided in Section 5.1.4.2. The monitoring program outlined in Section 5.1.4.2 ensures that treated water will meet or exceed Title 22 water quality criteria.

If, at any time, the analytical results for any of the treatment plant effluent water samples are not in compliance with CDPH requirements, the treatment plant will be manually shut down by the operator. The operational records and set points will be reviewed so that a cause for the noncompliance can be identified and communicated to CDPH. The treatment plant will be restarted after CDPH approves the modifications and corrective actions proposed by the operator.

5.1.3 Operations Plan and Reliability Features

The MHTS includes use of the best available technologies defined for the chemicals of interest. The Operation and Maintenance (O&M) Plan will be designed to optimize operation of the treatment system to achieve the lowest concentration of contaminants feasible at all times. The entire flow from the water supply wells will pass through the treatment system at all times.

5.1.3.1 Process Monitoring and System Reliability

The Draft O&M plan for the MHTS is included as Appendix J to this document, and a summary of general O&M guidelines is provided below.

5.1.3.1.1 Ion Exchange System Operation

The ion exchange system is operated in a downflow mode with each pair of parallel ion exchange resin beds in a series configuration. During normal operation, no special controls are required to operate at flowrates ranging from 6,300 to 7,000 gpm, as the flow will be evenly distributed among the four ion exchange vessel pairs. The vessels and distribution system are designed to operate effectively and efficiently within this flow range.

Each vessel will contain single-use, ion exchange resin for perchlorate removal. As the resin becomes saturated with perchlorate over time, the lead resin bed will be replaced with fresh resin. CDPH will require lead-lag operation at all times; therefore, an entire vessel pair will be taken off-line during a resin changeout of the lead bed. After the first ion exchange vessel is emptied, filled with fresh resin, backwashed, and rinsed, it can be placed on-line in the lag position. At this point, the second ion exchanger becomes the lead bed. The saturated resin will be disposed at a CERCLA-permitted facility.

The resin transfer can be accomplished in two ways, using either supersacks or by bulk transfer. If an air compressor is used onsite during resin transfer, it will be equipped with properly operated mufflers that meet the manufacturer's specifications to minimize excess noise associated with system construction. After new resin is transferred, the vessel will be backwashed with a minimum five bed volumes of potable water (at 150 gpm) before being brought on-line. If the resin is not pre-rinsed at the CCC Santa Fe Springs facility, then it will be forward-rinsed with approximately 25 bed volumes after backwashing is completed to reduce nitrosamine concentrations leaving the resin bed to below 10 μg/L, as confirmed by lab test results. Well water will be used for this purpose. The rinse water will be sent through the GAC vessels for further treatment and then discharged to the Arroyo Seco spreading basins.

The need to backflush during normal system operation is indicated by an increased pressure drop across the bed. Backflushing during normal system operation can reduce the pressure drop across the bed by removing: (1) sediment from the bed, (2) fines that may be plugging the underdrain nozzles, and (3) air that is trapped in the bed. However, use of the equalization sumps and influent filters should eliminate much of the sediment and fines that are produced from the wells, significantly reducing the frequency of backflushing. The backflush water enters the vessel through the flush connection and flows up through the underdrain and the resin bed. The backflush water discharge from the resin fill line should be observed for clarity to determine the duration of backflushing. The backflush water will be treated using either one pair of GAC vessels in the MHTS or a portable sacrificial GAC unit brought to the site for this purpose, and then discharged to the Arroyo Seco spreading basins.

In order to obtain full utilization of the resin and prevent air entrapment and channeling in the bed, the water level must remain above the resin bed. To prevent the bed from draining due to gravity or loss of influent supply, each vessel will be equipped with high point air releases on the vessel heads.

5.1.3.1.2 GAC System Operation

The GAC system is operated in a downflow mode with each pair of parallel GAC beds in a series configuration. During normal operation, no special controls are required to operate at flowrates ranging from 6,300 to 7,000 gpm, as the flow will be evenly distributed among the five GAC vessel pairs. The vessels and distribution system are designed to operate effectively and efficiently within this flow range.

Each vessel will contain virgin Filtrasorb 300 GAC for VOC removal. Initially, the VOCs are adsorbed onto the carbon in the upper portion of the lead bed. As this top portion becomes saturated, adsorption takes place lower in the bed. Eventually, all of the carbon in the lead adsorber becomes saturated, and the lead carbon adsorber will be replaced with fresh GAC. CDPH will require lead-lag operation at al times; therefore an entire vessel pair will be taken off-line during a GAC changeout of the lead bed. After the first vessel is emptied, filled with fresh GAC, wetted, and backwashed, it can be placed on-line in the lag position. At this point, the second carbon adsorber becomes the lead bed. Upon receipt of waste characterization sampling, the spent GAC will be either thermally reactivated or disposed at a CERCLA-permitted facility.

The spent carbon is transferred from the adsorber to the bulk trailer by first filling the adsorber with water. The adsorber is then pressurized using compressed air to transfer the carbon to the

trailer. A charge of fresh carbon is transferred back into the vessel by filling the bulk trailer with water and placing a water cushion in the adsorber. The bulk trailer is then pressurized with compressed air to facilitate the carbon transfer into the adsorber. The air compressor used onsite during transfer of the GAC media will be equipped with properly operated mufflers that meet the manufacturer's specifications to minimize excess noise associated with the system maintenance.

Prior to bringing the new GAC bed on-line, the carbon media will be wetted to remove air from within the pore volume of the media. After wetting, the new GAC bed will be backwashed with potable water to remove any air or carbon fines, and to segregate the carbon by size. Backwashing will be completed per the manufacturer's instructions provided in the final O&M plan. The backwash water will be filtered through a bag filter and treated using either one pair of GAC vessels in the MHTS or a portable sacrificial GAC unit brought to the site for this purpose, prior to being discharged to the Arroyo Seco spreading basins.

Backflushing may be required during normal system operation when the pressure drop across an adsorber increases by 5 to 10 psi. Backflushing can reduce the pressure drop across an adsorber by removing: (1) sediment from the bed, (2) carbon fines that may be plugging the underdrain nozzles, and (3) air that is trapped in the bed. However, use of the equalization sumps and influent filters should eliminate much of the sediment and fines that are produced from the wells, significantly reducing the frequency of backflushing. The backflush flow rate depends upon the carbon particle mesh size and the water temperature. Backflushing will be completed per the manufacturer's instructions provided in the final O&M manual. The backflush water will be filtered through a bag filter and treated using either one pair of GAC vessels in the MHTS or a portable sacrificial GAC unit brought to the site for this purpose, prior to being discharged to the Arroyo Seco spreading basins.

In order to obtain full utilization of the carbon and prevent air entrapment and channeling in the bed, the water level must remain above the carbon bed. To prevent the bed from draining due to gravity or loss of influent supply, each vessel will be equipped with high point air releases on the vessel heads.

Reliability features of the PWP treatment plant will include the following:

- Lead-lag operation of multiple pairs of ion exchange and GAC vessels will ensure that the plant will not need to be shut down if one vessel fails or is out of service. This level of redundancy allows operation of the plant to continue at a lower flowrate when carbon or resin becomes spent and needs to be replaced.
- Frequent system monitoring and sampling of the ion exchange and GAC systems will ensure that the treatment system is achieving the CDPH permitting requirements at all times.
- A water quality surveillance plan is also proposed to provide early detection of potentially increasing chemical concentrations in the PWP wells. As system operation progresses, fate and transport analysis of data collected from upgradient monitoring wells will be evaluated to estimate concentrations in the water supply wells (see Section 5.1.5). This evaluation will be completed to verify that the treatment capacity of the plant is sufficient to address potentially increasing concentrations of chemicals.

5.1.3.2 Plant Optimization

Plant optimization is a process by which the operation of the treatment plant is fine-tuned to obtain maximum performance. The two primary goals of plant optimization are to: (1) meet or exceed the performance standards; and (2) provide the most cost-effective method for treatment.

Optimization considers the cost of operation, but will not replace the operational performance standards specified for the treatment process. Optimization may include evaluating ion exchange and GAC usage, and power consumption for the MTHS. Decisions regarding the change-out of the GAC and ion exchange resin will be made based on protecting the domestic water supply.

5.1.3.3 Failure Response

Monitoring instrumentation on the treatment system will be interfaced with the existing Supervisory Control and Data Acquisition (SCADA) system and electrical service. Treatment system instrumentation will provide monitoring capabilities; no devices will require return control signals. Table 5-2 lists all instrumentation provided throughout the system, including that for the production wells, feed pumps, equalization sump, and treatment equipment.

Instrumentation associated with the MHTS equipment primarily includes flow meters, differential pressure gauges, and rupture disk alarms. Magnetic flow meters will be installed on each of the treatment vessels (ion exchange and GAC) to monitor and totalize flow. Flow will be measured on the vessel influent/backwash discharge line to detect flow both entering and exiting (under backwash conditions) the vessel. The magnetic flow meters will be powered by 24 volt direct current (VDC) from the SCADA junction box. The flow meters will each source a 4 to 20 mili-Amp (mA) direct current (DC) signal for input to the SCADA interface. All flow control through the system will be manually adjusted using the appropriate flow control valves.

One differential pressure transmitter will be on each of the treatment vessels (ion exchange and GAC) to monitor pressure drop across each pair of vessels. The differential pressure transmitter will provide a 4 to 20 mA signal for input to the SCADA interface. The differential pressure transmitters will be powered by 24 VDC from the SCADA junction box. In addition, the process piping will be equipped with pressure gauges to indicate the water pressure entering each pair of treatment vessels (ion exchange and GAC). The pressure gauges will have a range of 1 to 200 psi. Rupture disks will also be provided with each vessel, and will incorporate burst indicators to allow remote indication of rupture disk status.

Differential pressure transmitters will also be provided for the inlet filter system. One differential pressure transmitter will be provided to measure the pressure drop across the filter vessels. The combined effluent line from the GAC units will also be equipped with a magnetic flow meter to monitor and totalize flow. The flow meter will be powered by 24 VDC from the SCADA junction box, and will source a 4 to 20 mA DC signal for input to the SCADA interface.

The system will be routinely monitored by the Treatment System Operator. If major components of the system are not operational (e.g., wellhead pumps, feed pumps) or if any instrumentation is malfunctioning to the point where proper operation of the plant cannot be assured, then the treatment plant will be shut down. Also, if the treatment system fails to

achieve the CDPH permitting requirements, it will be shut down. Failure response and risks associated with a treatment system failure are discussed in detail in Section 6.0.

5.1.4 Treatability Assessment and Monitoring Program

A monitoring program will be implemented upon the startup of the MHTS in order to ensure protection of the domestic water supply (see Section 5.1.4.2). Because the raw water originates from an extremely impaired source, monitoring required under CCR Title 22 will be performed in addition to monitoring compounds identified during the source water assessment and raw water quality characterization. COCs identified in the raw water quality characterization have been assessed for treatability as described in Section 5.1.4.1. A monitoring program is defined based on the results of the treatability assessment and the monitoring requirements from 22 CCR 15. However, the monitoring program may be amended by CDPH permit conditions (i.e., frequency and compounds), or changed in the future to satisfy changing site conditions. Additional compounds may be assessed and added to the monitoring program, as necessary, if they are discovered in the future.

5.1.4.1 Treatability Assessment

Chemicals potentially present in the MHTS influent water consists of those chemicals frequently present in each production well based on historical data as well as those chemicals identified in the source water assessment as potentially impacting groundwater within the capture zones. The treatability assessment evaluates the potential for the MHTS to meet performance standards for the COCs identified in Section 3 (Tables 3-11 and 3-12). The compounds listed in Table 5-3 were evaluated for their ability to be treated by either the GAC or ion exchange, as appropriate. Appendix K presents the design influent and effluent chemical concentrations based on modeling conducted by the treatment equipment vendor. This information indicates that all of the modeled chemicals can be effectively treated using the proposed IX and GAC treatment system. In addition, the COC chloroform can also be treated by the GAC system.

5.1.4.2 Compliance Monitoring and Reporting Program

The wells and treatment plants will be monitored in accordance with CCR Title 22 Chapter 15 and with any additional CDPH permit requirements. Table 5-1 summarizes the proposed constituents to be analyzed and the monitoring frequency. The final treatment system monitoring schedule will be reviewed and approved by the CDPH during the permitting process. All identified COCs will be monitored. NLs and MCLs will be met in the treated water. Water supply well sampling will be performed to monitor chemicals of interest. Additionally, samples will be collected from various other locations throughout the treatment plant to monitor and optimize the water treatment plant process, as discussed above.

A summary report will be prepared and submitted to the CDPH and EPA on a monthly basis. The report will include the quantity of water extracted from each well, the total flowrate, and operational parameters for the MHTS. A summary of analytical results, including monitoring well samples and process monitoring samples will be included in the report. Any abnormal conditions or treatment system maintenance also will be included in the summary report.

Target compounds for an analytical method are the compounds that are identified as applicable to that specific method. However, additional compounds, referred to as non-target compounds, also may be detected by the method. If the concentration of a non-target compound is sufficient

enough to produce a signal greater than or equal to the set peak threshold, a library search will be performed by the laboratory to determine tentative identification. If the non-target compound matches a compound listed in the library, it is then referred to as a TIC. Reporting requirements for non-target VOCs and SVOCs are included in the CDPH guidance that was revised in September 2003. The reporting of these compounds should be conducted by the water purveyor per CDPH guidance.

5.1.5 Water Quality Surveillance Plan

A water quality surveillance plan is proposed to provide early detection of potentially increasing chemical concentrations in the PWP wells. As system operation progresses, fate and transport analysis of data collected from upgradient monitoring wells will be evaluated to estimate concentrations in the water supply wells. This evaluation will be completed to verify that the treatment capacity of the plant is sufficient to address potentially increasing concentrations of chemicals. Based on modeling conducted for the 97-005 document, the following monitoring wells were selected to be included in the water quality surveillance plan because they are located within the capture zone of the PWP wells: MW-3, MW-4, MW-5, MW-10, MW-17, MW-18, and MW-19.

The water quality surveillance plan will be incorporated into the current JPL groundwater monitoring program that was initiated in August 1996. The groundwater monitoring program includes VOCs and inorganics, including metals, anions, cations, and other field parameters. Analyses for metals, anions, cations, alkalinity, and pH have been performed annually in recent years. Some of the chemicals analyzed in this program include carbon tetrachloride, TCE, PCE, 1,1-DCA, 1,1-DCE, Freon 113, chloroform, and perchlorate. The water quality surveillance plan will include the same constituents as the groundwater monitoring program. The surveillance plan may be amended to include additional constituents, as required by the CDPH.

5.1.6 Emergency Notification/Contingency Plan

All emergency situations will be reported by verbal communication to management and the appropriate regulatory agencies as soon as possible. Emergency situations can be defined as operation incidents, compliance failure for treated water, pipeline leaks or breaks, natural disasters, and safety and health incidents (i.e., accidents, injuries, spills, releases). In the event of an emergency situation, PWP will notify the CDPH, EPA, and the public.

In an emergency situation, PWP has a total of 27 interconnections with nine other local water systems that can supply water during emergencies, shortages, or periods of high demand. Approximately 22 of the interconnections are supplied by other water agencies to provide water to the City for emergency and general services. It should be noted that the majority of the interconnections permit flow only in one direction either due to differences in static pressure or back flow devices.

5.2 LAWC Treatment System

5.2.1 Treatment System Description

The two LAWC wells also are situated southeast and downgradient of the JPL facility. These wells pump a combined flow of approximately 2,000 gpm. All groundwater extracted from

these public water supply wells flow through the existing LAWC treatment system prior to potable use. Water samples are collected consistently from the treatment plant influent, at intermediate points within the plant, and the plant effluent to monitor and optimize the process to verify the effectiveness of treatment. A more detailed sampling plan is provided in Section 5.3.1 and Table 5-4 of this report.

Centralized treatment for the LAWC wells includes ion exchange to remove perchlorate and GAC to remove VOCs. A process flow diagram for this treatment system is provided as Figure 5-2. Ion exchange treatment consists of a US Filter Model HP 1220DS Hi-Flow System. The HP 1220DS System has two 12-ft-diameter ion exchange vessels (operated in lead/lag configuration), with a nominal treatment capacity of 2,000 gpm and a maximum treatment capacity of 2,400 gpm. The empty bed contact time for the nominal treatment capacity is 3.76 minutes per vessel. All piping, valves, and gauges are included within the skid-mounted system. Details of the US Filter treatment system are provided as Appendix L, and includes a summary of the technology, system specifications, and a general assembly diagram.

Each ion exchange unit contains 300 cubic feet of Rohm and Haas, Amberlite™ PWA2 Strongly Basic Anion Exchange Resin, which is a specially designed resin for the selective removal of perchlorate from potable water. Amberlite™ PWA2 has been certified for potable water use according to NSF Standard 61 for drinking water system components. Additional details on the ion exchange resin are provided in Appendix M. Weekly samples are collected for perchlorate analysis after the lead ion exchange unit to confirm that the CDPH permitting requirements are met and to allow for optimization of the unit process.

The next unit process of the LAWC treatment system is VOC removal using GAC vessels. Four vessels containing approximately 20,000 lb of GAC each are used to treat VOCs in the extracted groundwater to levels below the CDPH drinking water permit requirements. Each vessel has a capacity of up to 900 gpm; however, the normal operating capacity of the units is 700 gpm. The four vessels are operated in a downflow parallel configuration. Monthly influent and effluent water samples to the GAC unit process are collected to confirm that the CDPH permitting requirements are met and to allow optimization of the unit process.

All water treated from the LAWC treatment system is continuously and reliably chlorinated to a minimum of 0.2 ppm. The chlorinated water is monitored daily before it reaches the first customer in the distribution system. The treated water is conveyed from the LAWC treatment system to the Olive Avenue Sump. At the Olive Avenue Sump the treated water is blended with water supplied by the Foothill Municipal Water District (FMWD). The blending adds another level of redundancy to the treatment process to ensure water provided for potable use meets the CDPH permitting requirements at all times.

5.2.2 Performance Standards

Overall performance of the treatment system is measured by samples collected from the finished water. Sampling is conducted in accordance with CCR Title 22. CDPH may modify the Title 22 requirements or request additional monitoring, which would be outlined in the operating permit. State MCLs and NLs are primarily the controlling standards for the finished water, and these standards must be attained for the effluent from the LAWC treatment plant. However, CDPH has required that the LAWC treatment system remove perchlorate in the finished water to less than detection using EPA Method 314. A listing of constituents to be

monitored, analytical methods, reporting limits, MCLs, NLs, PHGs, and monitoring frequencies is provided in Section 5.2.4.2. The monitoring program outlined in Section 5.2.4.2 ensures that treated and blended water will meet or exceed application Title 22 water quality criteria.

If, at any time, the analytical results for the treatment plant effluent water samples are not in compliance with CDPH requirements, that treatment plant will be manually shut down by the operator. The operational records and set points will be reviewed so that a cause for the noncompliance can be identified and communicated to CDPH. The treatment plant will be restarted after CDPH approves the modifications and corrective actions proposed by the operator.

5.2.3 Operations Plan and Reliability Features

The LAWC treatment system includes use of the best available technologies defined for the chemicals of interest. The O&M Plan is designed to optimize operation of the treatment system to achieve the lowest concentration of contaminants feasible at all times. The entire flow from the water supply wells passes through the treatment system at all times.

5.2.3.1 Process Monitoring and System Reliability

The O&M plan for the LAWC treatment system is included as Appendix N to this document. The treatment plant raw water flow is approximately 2,000 gpm. Specific design criteria and operating parameters and guidelines for each process of the treatment plant are provided in the O&M Plan.

As discussed in Section 5.2.1, the LAWC treatment plant consists of ion exchange and GAC vessels. Daily inspections of the treatment system are conducted by the Treatment Plant Operator. The daily inspections are recorded on a log sheet and include the pressure drop across the ion exchange units and the GAC units, all equipment maintenance, calibrations, system cleaning, repairing, parts replacement, and unusual occurrences or shutdowns. A monthly report containing these records is submitted to the CDPH.

Regular O&M of the treatment system also includes sampling to confirm treatment system effectiveness; a sampling schedule for the LAWC treatment system is shown in Table 5-4. Weekly treated water samples will be collected for perchlorate analysis after each of the ion exchange units. The ion exchange resin is replaced in the lead vessel when the effluent perchlorate from the lead vessel reaches a concentration of 30% of the influent perchlorate concentration, or if the perchlorate concentration leaving the lag vessel exceeds the detection limit of 4 µg/L. During the resin change, the lead vessel is taken off line and new resin is loaded into the vessel. The vessel containing the new resin is placed in the lag/polishing position. Valving is adjusted so that the former lag vessel takes the lead position. This ensures that the newest resin is always in the lag/polishing position.

Similarly, weekly VOC samples from the fourth port on each GAC vessel are collected to determine when activated carbon replacement is necessary. The GAC is replaced in the individual vessels when a breakthrough of VOCs occurs, as indicated by samples obtained from the fourth port located at approximately 75% of the depth of the GAC bed. The spent media is taken off site for disposal or regeneration by a carbon service.

In addition, monthly microbiological testing (coliform and heterotrophic plate count [HPC]) of the combined effluent from the treatment plant is conducted. If the combined effluent sample tests positive for coliform and/or the HPC exceeds 500 CFU/mL, each GAC and ion exchange vessel will be tested. When the effluent from an individual vessel tests positive for coliform and/or the HPC exceeds 500 CFU/mL, that vessel will be re-tested within 24 hours. Consideration for disinfection of the vessel(s) will be given if two consecutive positive results for coliform and/or the HPC tests exceed 500 CFU/mL.

Reliability features of the LAWC treatment plant include the following:

- Operation of multiple GAC vessels in parallel ensures that the plant will not need to be shut down if one vessel fails or is out of service. This level of redundancy allows operation of the plant to continue at a lower flowrate when carbon becomes spent and needs to be replaced.
- Each GAC vessel is designed to provide a contact time of 6 minutes at a maximum flowrate of 900 gpm each. However, LAWC operates the GAC units with an average flowrate of 700 gpm for a 7.5-minute contact time. This additional contact time provides an added level of safety to ensure that VOC contaminants are removed from the drinking water.
- Weekly sampling of the ion exchange and GAC systems ensures that the treatment system is achieving the CDPH permitting requirements at all times.
- Treated water is discharged to the Olive Avenue Sump and, when demand dictates, blended with water purchased from FMWD. The blending adds another level of protectiveness to the treatment process to ensure clean, safe water is provided to LAWC customers.

5.2.3.2 Plant Optimization

Plant optimization is a process by which the operation of the treatment plant is fine-tuned to obtain maximum performance. The two primary goals of plant optimization are to: (1) meet or exceed the performance standards; and (2) provide the most cost-effective method for treatment. In general, optimization will most likely focus on adjustments to treatment system influent flowrates to the GAC and ion exchange units and water blending ratios.

Optimization considers the cost of operation, but will not replace the operational performance standards specified for the treatment process. Optimization may include varying the flow rate to determine the impact on water quality, GAC and ion exchange resin usage, and power consumption. Decisions regarding the change-out of the GAC and ion exchange resin will be made based on protecting the domestic water supply.

Optimization of blending also will occur at the Olive Avenue Sump. The ratio of treated process water and FMWD water during blending will be adjusted to reduce the presence of chemicals that are not treated by the plant.

5.2.3.3 Failure Response

As discussed above, the system is monitored daily by the Treatment System Operator. If major components of any of the systems are not operational (e.g., wellhead pumps, GAC backwash system) or if any instrumentation is malfunctioning to the point where proper operation of the

plant cannot be ensured, then the treatment plant will be shut down. Also, if the treatment system fails to achieve the CDPH permitting requirements, it will be shut down. Failure response and risks associated with a treatment system failure are discussed in detail in Section 6.0.

Treatment plant effluent for potable use is transferred to the Olive Avenue Sump for blending with FMWD water to reduce the concentration of compounds not removed by the treatment system, if necessary, before the water is introduced into the domestic water distribution system. Should the blending operation fail or be unable to reduce any untreated concentrations below the required levels, the blending operations will cease, and the water purveyor will immediately notify CDPH, and customers will be notified of the failure.

5.2.4 Treatability Assessment and Monitoring Program

A monitoring program is routinely implemented in order to ensure protection of the domestic water supply (see Section 5.2.4.2). Because the raw water originates from an extremely impaired source, monitoring required under CCR Title 22 is performed in addition to monitoring compounds identified during the source water assessment and raw water quality characterization. COCs identified in the raw water quality characterization have been assessed for treatability as described in Section 5.2.4.1. A monitoring program was defined based on the results of the treatability assessment and the monitoring requirements from 22 CCR 15. However, the monitoring program may be amended by CDPH permit conditions (i.e., frequency and compounds), or changed in the future to satisfy changing site conditions. Additional compounds may be assessed and added to the monitoring program, as necessary, if they are discovered in the future.

5.2.4.1 Treatability Assessment

COCs and COPCs for the LAWC production wells were identified in Section 3.3 using historical production well data and JPL monitoring well data (see Table 3-13). The treatability assessment evaluates the potential of the treatment system to meet performance standards for the COCs. The compounds listed in Table 5-5 were evaluated for their ability to be treated by either the GAC or ion exchange, as appropriate. Monitoring data which is currently being collected from the LAWC treatment system demonstrates that the identified COCs are treated by the operating IX and GAC system.

5.2.4.2 Compliance Monitoring and Reporting Program

The wells and treatment plant are monitored in accordance with CCR Title 22 Chapter 15 and all additional CDPH permit requirements. Table 5-4 summarizes the constituents that are analyzed and the monitoring frequency. The frequency of monitoring for COCs is defined in the CDPH permit conditions. All identified COCs are monitored. NLs and MCLs will be met in the treated water, except for perchlorate which will be non-detect using EPA Method 314. Water supply well sampling is performed to monitor chemicals of interest. Additionally, samples are collected from various other locations throughout the treatment plant to monitor and optimize the water treatment plant process, as discussed above. FMWD water is available for blending at the LAWC Olive Avenue Sump in the event the treatment system does not achieve the treatment goals.

Summary reports are prepared and submitted to the CDPH and EPA on a monthly basis. The report includes the quantity of water extracted from each well, and the total flowrate and operational parameters for the treatment system. A summary of analytical results, including monitoring well samples, process monitoring samples, and blended water samples, is included in the report. Any abnormal conditions or treatment system maintenance is also included in the summary report.

Target compounds for an analytical method are the compounds that are identified as applicable to that specific method. However, additional compounds, referred to as non-target compounds, also may be detected by the method. If the concentration of a non-target compound is sufficient enough to produce a signal greater than or equal to the set peak threshold, a library search will be performed by the laboratory to determine tentative identification. If the non-target compound matches a compound listed in the library, it is then referred to as a TIC. Reporting requirements for non-target VOCs and SVOCs are included in the CDPH guidance (CDPH, 2003) . The reporting of these compounds should be conducted by the water purveyor per CDPH guidance.

5.2.5 Water Quality Surveillance Plan

The water quality surveillance plan identifies that results from the ongoing quarterly groundwater sampling conducted for the JPL monitoring wells will be reviewed to provide early detection of increasing chemical concentrations. Note that the LAWC water supply wells are located downgradient of the former source of chemicals on JPL property. This physical arrangement will likely result in the water quality surveillance plan discovering higher chemical concentrations as system operation continues. As system operation progresses, fate and transport analysis of data collected from upgradient monitoring wells will be evaluated to estimate concentrations in the water supply wells. This evaluation will be completed to verify that the treatment capacity of the plant is sufficient to address potentially increasing concentrations of chemicals.

The water quality surveillance plan will be incorporated into the current JPL groundwater monitoring program that was initiated in August 1996. The groundwater monitoring program includes VOCs and inorganics, including metals, anions, cations, and other field parameters. Analyses for metals, anions, cations, alkalinity, and pH have been performed annually in recent years. Some of the chemicals analyzed in this program include carbon tetrachloride, TCE, PCE, 1,1-DCA, 1,1-DCE, Freon 113, chloroform, and perchlorate. The water quality surveillance plan will include the same constituents as the groundwater monitoring program. The surveillance plan may be amended to include additional constituents, as required by the CDPH.

5.2.6 Emergency Notification/Contingency Plan

All emergency situations will be reported by verbal communication to management and the appropriate regulatory agencies as soon as possible. Emergency situations can be defined as operation incidents, compliance failure for treated water, pipeline leaks or breaks, natural disasters, and safety and health incidents (i.e., accidents, injuries, spills, releases). In the event of an emergency situation, management of the LAWC treatment system will notify the CDPH, EPA, and the public.

In an emergency situation, LAWC maintains three emergency interconnections including water obtained from Las Flores and two locations from PWP.

5.3 Las Flores Treatment System

5.3.1 Treatment System Description

Las Flores Well #2 pumps approximately 400 to 500 gpm. All groundwater extracted from this public water supply well flows through the Las Flores treatment system prior to blending and distribution. Water samples are collected consistently from the treatment plant influent, at intermediate points within the plant, and the plant effluent to monitor the effectiveness of treatment and optimize the process. The sampling plan for Las Flores is provided in Table 5-6.

Centralized treatment for the Las Flores well includes one GAC vessel and blending. The GAC vessel has a maximum design capacity of 750 gpm and is used to treat PCE in the extracted groundwater to levels below the CDPH drinking water permit requirements. The treated groundwater is then blended with water from FMWD at the blending sump to reduce the concentrations of perchlorate and nitrate below the MCL prior to distribution. An approved blending plan for the Las Flores Water Company is on file with CDPH. The blending also adds another level of redundancy to the VOC treatment process to ensure water provided for potable use meets the CDPH permitting requirements at all times. All treated water is chlorinated prior to being supplied for potable use, and daily chlorine residual levels are measured and recorded.

5.3.2 Performance Standards

Overall performance of the treatment system is measured by samples collected from the finished water. Sampling is conducted in accordance with CCR Title 22. CDPH may modify the Title 22 requirements or request additional monitoring, which would be outlined in the operating permit. State MCLs and NLs are primarily the controlling standards for the finished water, and these standards must be attained for the effluent from the Las Flores treatment plant. A listing of constituents to be monitored, analytical methods, reporting limits, MCLs, NLs, PHGs, and monitoring frequencies is provided in Section 5.3.4.2. The monitoring program outlined in Section 5.3.4.2 ensures that treated and blended water will meet or exceed application Title 22 water quality criteria.

If, at any time, the analytical results from the treatment plant effluent water samples are not in compliance with CDPH requirements, the treatment plant will be manually shut down by the operator. The operational records and set points will be reviewed so that a cause for the noncompliance can be identified and communicated to CDPH. The treatment plant will be restarted after CDPH approves the modifications and corrective actions proposed by the operator.

5.3.3 Operations Plan and Reliability Features

The Las Flores treatment system includes use of the best available technology defined for the chemicals of interest. The O&M Plan is designed to optimize operation of the treatment systems to achieve the lowest concentration of contaminants feasible at all times. The entire flow from the water supply well passes through the treatment system at all times.

5.3.3.1 Process Monitoring and System Reliability

As discussed in Section 5.3.1, the Las Flores treatment plant consists of one GAC vessel. The CDPH permit, including operational requirements for the Las Flores treatment system, is included in Appendix O. Process monitoring points at the Las Flores treatment system include influent water from the well, sampling ports at 50% and 75% of the GAC bed depth, after the GAC unit, and after the blending operations. The sampling schedule is provided in Table 5-6. Results of this sampling are used to determine when breakthrough occurs in the GAC units, and to optimize the blending operations. The activated carbon in the vessel is replaced when breakthrough of PCE is detected at the sample tap at 75% of the depth of the GAC. AQUACARB 830 is used when replacing the activated carbon, or CDPH approval is required if other replacement carbon is used. If any GAC in the vessel is replaced with reactivated GAC, the GAC will be reactivated according to conditions stated in the operating permit (see Appendix O).

Daily inspections of the treatment system are also conducted by the Treatment Plant Operator. The daily inspections are recorded on a log sheet and include the flowrate, total volume treated, chlorine residual measurements, pressure drop across the GAC unit, all equipment maintenance, calibrations, system cleaning, repairing, parts replacement, and unusual occurrences or shutdowns. A monthly report containing these records is submitted to the CDPH.

Reliability features of the Las Flores treatment plant include the following:

- Weekly sampling of the GAC vessel to ensure that the treatment system is achieving the CDPH permitting requirements at all times.
- Implementation of a blending program provides additional reliability and reduces the presence of perchlorate and nitrate to levels below those required by CDPH.

5.3.3.2 Plant Optimization

Plant optimization is a process by which the operation of the treatment plant is fine-tuned to obtain maximum performance. The two primary goals of plant optimization are to: (1) meet or exceed the performance standards; and (2) provide the most cost-effective method for treatment. In general, optimization will most likely focus on adjustments to treatment system flowrates to the GAC unit, and water blending ratios.

Optimization considers the cost of operation, but will not replace the operational performance standards specified for the treatment process. Optimization may include varying the flowrate to determine the impact on water quality, GAC usage, and power consumption. Decisions regarding the change-out of the GAC will be made based on protecting the domestic water supply.

Optimization of blending also will occur at the Las Flores blending sump. The ratio of treated process water and FMWD water during blending will be adjusted to reduce the presence of chemicals that are not treated by the plant.

5.3.3.3. Failure Response

As discussed above, the treatment system is monitored daily by the Treatment System Operator. If major components of the system are not operational (e.g., wellhead pumps, GAC

backwash system) or if any instrumentation is malfunctioning to the point where proper operation of the plant cannot be assured, then the treatment plant will be shut down. Also, if the treatment system fails to achieve the CDPH permitting requirements, it will be shut down. Failure response and risks associated with a treatment system failure are discussed in detail in Section 6.0.

The treatment plant effluent for potable use will be transferred to the Las Flores blending sump for blending with FMWD water to reduce the concentration of compounds not removed by the treatment system before the water is introduced into the domestic water distribution system. Should the blending operation fail or be unable to reduce the concentrations below the required levels, the blending operations will cease, and the water purveyor will immediately notify CDPH, and customers will be notified of the failure.

5.3.4 Treatability Assessment and Monitoring Program

A monitoring program is routinely implemented in order to ensure protection of the domestic water supply (see Section 5.3.4.2). Because the raw water originates from an extremely impaired source, monitoring required under CCR Title 22 is performed in addition to monitoring compounds identified during the source water assessment and raw water quality characterization. COCs identified in the raw water quality characterization have been assessed for treatability as described in Section 5.3.4.1. A monitoring program was defined based on the results of the treatability assessment and the monitoring requirements from 22 CCR 15. However, the monitoring program may be amended by CDPH permit conditions (i.e., frequency and compounds), or changed in the future to satisfy changing site conditions. Additional compounds may be assessed and added to the monitoring program, as necessary, if they are discovered in the future.

5.3.4.1 Treatability Assessment

COCs for the Las Flores production wells were identified in Section 3.3 using monitoring well data and reported chemical usage data (see Table 3-15). The compounds listed in Table 5-7 were evaluated for their ability to be treated by the GAC system and blending plan. Monitoring data which is currently being collected from the Las Flores treatment system demonstrates that the identified COCs are treated by the operating GAC system and blending program.

5.3.4.2 Compliance Monitoring and Reporting Program

The well and treatment plant are monitored in accordance with CCR Title 22 Chapter 15 and all additional CDPH permit requirements. Table 5-6 summarizes the constituents to be analyzed and the monitoring frequency. The frequency of monitoring for COCs is defined in the CDPH permit conditions. All identified COCs are monitored. The MCL for PCE will be met in the treated water, and the MCLs for perchlorate and nitrate will be met in the blended water. Water supply well sampling will be performed to monitor chemicals of interest. Additionally, samples will be collected from various other locations throughout the treatment plant to monitor and optimize the water treatment plant process, as discussed above. PCE, perchlorate, and nitrate concentrations are also monitored at the blending sump, where FMWD water is available for blending.

Summary reports are prepared and submitted to the CDPH and EPA on a monthly basis for the treatment plant. The report includes the quantity of water extracted from the supply well, and the total flowrate and operational parameters for the treatment system. A summary of analytical results, including monitoring well samples, process monitoring samples, and blended water samples, is also included in the report, along with any abnormal conditions or treatment system maintenance.

Target compounds for an analytical method are the compounds that are identified as applicable to that specific method. However, additional compounds, referred to as non-target compounds, also may be detected by the method. If the concentration of a non-target compound is sufficient enough to produce a signal greater than or equal to the set peak threshold, a library search will be performed by the laboratory to determine tentative identification. If the non-target compound matches a compound listed in the library, it is then referred to as a TIC. Reporting requirements for non-target VOCs and SVOCs are included in the CDPH guidance (CDPH, 2003). . The reporting of these compounds should be conducted by the water purveyor per CDPH guidance.

5.3.5 Water Quality Surveillance Plan

The water quality surveillance plan identifies that results from the ongoing quarterly groundwater sampling conducted for the JPL monitoring wells will be reviewed to provide early detection of increasing chemical concentrations. Note that the Las Flores water supply well is located downgradient of the former source of chemicals on JPL property. This physical arrangement will likely result in the water quality surveillance plan discovering higher chemical concentrations as system operation continues. As system operation progresses, fate and transport analysis of data collected from upgradient monitoring wells will be evaluated to estimate concentrations in the water supply well. This evaluation will be completed to verify that the treatment capacity of the plant is sufficient to address potentially increasing concentrations of chemicals.

The water quality surveillance plan will be incorporated into the current JPL groundwater monitoring program that was initiated in August 1996. The groundwater monitoring program includes VOCs and inorganics, including metals, anions, cations, and other field parameters. Analyses for metals, anions, cations, alkalinity, and pH have been performed annually in recent years. Some of the chemicals analyzed in this program include carbon tetrachloride, TCE, PCE, 1,1-DCA, 1,1-DCE, Freon 113, chloroform, and perchlorate. The water quality surveillance plan will include the same constituents as the groundwater monitoring program. The surveillance plan may be amended to include additional constituents, as required by the CDPH.

5.3.6 Emergency Notification/Contingency Plan

All emergency situations will be reported by verbal communication to management and the appropriate regulatory agencies as soon as possible. Emergency situations can be defined as operation incidents, compliance failure for treated water, pipeline leaks or breaks, natural disasters, and safety and health incidents (i.e., accidents, injuries, spills, releases). In the event of an emergency situation, Las Flores management will notify the CDPH, EPA, and the public.

In an emergency situation, Las Flores maintains one emergency interconnection with LAWC.

5.4 Rubio Cañon Treatment System

5.4.1 Treatment System Description

The two Rubio Cañon wells pump a total of approximately 2,700 gpm; Well #4 pumps approximately 900 gpm, and Well #7 pumps approximately 1800 gpm. Water from the wells is pumped during the summer months (May through September) and chlorinated at the Figeuroa Sump prior to distribution for potable use. FMWD water is supplied to the Figeuroa Sump during the remaining months.

Treatment for the Rubio Cañon wells is not currently necessary. Water from the wells is monitored on a daily basis for perchlorate. As requested by CDPH in a letter dated May 5, 2009, a contingency plan was developed and submitted to CDPH outlining the perchlorate sampling requirements and the subsequent actions to address perchlorate in the extracted groundwater, if detected at the identified trigger levels. Details of any future blending plan or treatment system will be submitted to CDPH for approval, should it become necessary based on results of the perchlorate monitoring. If the concentration of perchlorate in the Figeuroa Sump exceeds the CDPH MCL of 6 parts per billion (ppb), customers will be notified within 24 hours and a Tier 1 public notice will be initiated.

5.4.2 Emergency Notification/Contingency Plan

All emergency situations will be reported by verbal communication to management and the appropriate regulatory agencies as soon as possible. Emergency situations can be defined as operation incidents, compliance failure for blended water, pipeline leaks or breaks, natural disasters, and safety and health incidents (i.e., accidents, injuries, spills, releases). In the event of an emergency situation, Rubio Cañon management will notify the CDPH, EPA, and the public.

In an emergency situation, Rubio Cañon maintains one emergency interconnection with PWP.

6.0 Risks Associated with the Failure of the Treatment System

6.1 Introduction

Groundwater treatment technologies are not failure-proof, and untreated or insufficiently treated water can pass through treatment systems and into distribution systems. Therefore, an assessment was conducted to evaluate the potential health risk associated with such failures. This assessment includes an estimation of the risks of failure of the proposed treatment systems, and an assessment of potential health risks associated with potential failure of the proposed treatment systems. The estimation of the risks of failure is evaluated in terms of the probability to fail, thereby resulting in exposure of individuals to insufficiently or untreated drinking water. The health assessment takes into account the duration of exposure resulting from the potential failure, the human health risks associated with such failure resulting from exposure to chemical constituents (both the COCs and COPCs designated in Section 3.0), and the cumulative risks due to potential multiple failures of the treatment systems.

6.2 Background

As described in Section 5.0, four drinking water purveyors operate using groundwater from the Monk Hill Subarea: PWP, LAWC, Rubio Cañon, and Las Flores. Drinking water treatment at the PWP treatment plant will include LGAC for VOC removal and ion exchange for perchlorate treatment. The LAWC treatment system consists of LGAC for VOC removal and ion exchange for perchlorate treatment. The Las Flores treatment system consists of LGAC for VOC removal and blending for perchlorate concentration reduction. Currently, no centralized treatment is required for the Rubio Cañon drinking water supply wells. Treated water from PWP, LAWC, and Las Flores will be available to their respective customers within the City of Pasadena and Altadena for potable use upon approval from the CDPH. Rubio Cañon is included in this permit application in the event that centralized treatment becomes necessary in the future.

As discussed in Section 5.0, process flow diagrams of the PWP and LAWC treatment systems are presented in Figures 5-1 and 5-2, respectively. Interlocks and other instrumentation and controls are designed into each system to protect against accidental discharge of untreated water from the PWP treatment system to the municipal water supply by initiating automatic shutdown if specific parameters are not met. All systems also are monitored on a daily basis by the Treatment Plan Operator to determine if there are any operating parameters out of range, or unusual operational problems. System redundancy also will be provided for the important equipment such as ion exchange units and LGAC vessels. Preventative measures that will be taken specifically for each of the treatment systems are described in the following subsections.

6.2.1 PWP Treatment System

The PWP drinking water treatment system will consist of several components including groundwater extraction pumps, LGAC for VOC removal, and ion exchange for perchlorate removal. Because equipment failure or other adverse conditions potentially may impact

treatment effectiveness, the following preventative measures will be taken to shut down the treatment system upon equipment failure to minimize the potential impact to human health and to prevent the delivery of untreated groundwater to the public:

- The treatment system will be manually shut down if the Treatment System Operator identifies that any operating parameter, for example the pressure buildup in the LGAC vessels or the ion exchange vessels, is out of the recommended operating range.

- The treatment system will be manually shut down if any chemicals are detected above the permitted limits during the regularly scheduled monitoring events.

6.2.2 Lincoln Avenue Water Treatment System

The LAWC drinking water treatment system consists of groundwater extraction pumps, ion exchange for perchlorate removal, and LGAC for VOC removal. Because equipment failure or other adverse conditions potentially may impact treatment effectiveness, the following preventative measures will be taken to shut down the treatment system upon equipment failure to minimize the potential impact to human health and to prevent the delivery of untreated groundwater to the public:

- The treatment system will be manually shut down if the Treatment System Operator identifies that any operating parameter, for example the pressure buildup in the LGAC vessels or the ion exchange vessels, is out of the recommended operating range.

- The treatment system will be manually shut down if any chemicals are detected above the permitted limits during the regularly scheduled monitoring events.

6.2.3 Las Flores Treatment System

The Las Flores treatment system consists of groundwater extraction pumps, LGAC for PCE removal, and blending for perchlorate concentration reduction. Because equipment failure or other adverse conditions potentially may impact treatment effectiveness, the following preventative measures will be taken to shut down the treatment system upon equipment failure to minimize the potential impact to human health and to prevent the delivery of untreated groundwater to the public:

- The treatment system will be manually shut down if the Treatment System Operator identifies that any operating parameter, for example the pressure buildup in the LGAC vessels or the ion exchange vessels, is out of the recommended operating range.

- The treatment system will be manually shut down if any chemicals are detected above the permitted limits during the regularly scheduled monitoring events.

6.3 Risk Results

6.3.1 Evaluation of Potential Failure Scenarios and Frequency of Occurrence

System performance will be monitored by various interlocks and other electronic instrumentation and controls to protect against accidental discharge of untreated water to the municipal water supply. However, a worst-case scenario was assumed in order to determine the health risks to users from untreated groundwater if a complete and simultaneous failure of system components occurred (even though the programmable logic controller would still be in operation). Under this failure scenario, all preventative measures as listed above for each treatment system would have been impeded enough for problems to go unnoticed for a lengthy period of time, resulting in using untreated water for potable purposes.

As discussed in Section 5.0, PWP, LAWC, and Las Flores collect weekly treatment system monitoring samples. System failure is assumed to occur immediately following collection of a weekly treated water sample. The failure therefore would not be detected, and thus resolved, for a total of 14 days, assuming the next scheduled sampling event would be in seven days and laboratory turnaround time for analyses is seven days. Complete failure of the treatment system is conservatively assumed to occur once every five years over a 20-year period.

6.3.2 Health Risk Evaluation

An assessment of the water quality of the influent to each of the treatment plants was performed in Section 3.0. Based on the results of this assessment, chemicals and estimated concentrations of these chemicals were used to conduct a health risk evaluation. Estimated influent concentrations of all chemicals (e.g., COCs and COPCs as designated on Tables 3-11 through 3-15) were used to calculate carcinogenic risk (risk) and noncarcinogenic hazard (hazard) estimates associated with exposure to untreated water. Risk and hazard estimates were calculated by using ratios of chemical concentrations to EPA Regional Screening Levels (RSLs) (EPA, 2009). The RSL value for carcinogens represented a cancer risk of one in one million (i.e., 1×10^{-6}) and for noncarcinogens represented a safe threshold value of 1.

For chemicals lacking toxicity values and therefore an RSL, risk/hazard could not be estimated. Therefore, the risk/hazard discussion provided below for each of the water treatment plants provides a qualitative comparison to MCLs or NLs to put the influent concentration into perspective. Constituents such as calcium, chloride, magnesium, potassium, silica, sulfate, and sodium were measured as standard water quality parameters and although these may be present in the water, they are not included in the human health risk assessment.

Rather than conduct a risk assessment for chemicals under a treatment failure scenario, a more streamlined risk evaluation was conducted that used risk ratios to estimate carcinogenic risks and noncarcinogenic indices. The use of the RSL in this particular evaluation was intended to be conservative because these values are strictly risk-based (i.e., levels that provide protection against cancer and noncancer health effects associated with exposure to that chemical), and do not consider technical feasibility or cost to implement (as do MCLs).

The cancer risk associated with chemicals in untreated drinking water is calculated using Equation 6-1. Risk estimates are presented as excess cancer risk per unit of population. For example, a risk estimate of 1×10^{-6} is equivalent to one excess occurrence of cancer per 1,000,000 individuals in a given population. The cancer risk is summed across all chemicals to determine the total site cancer risk.

$$\text{Cancer Risk} = \frac{\text{Chemical Concentration}}{\text{RSL for Carcinogenic Endpoint}} \times \frac{\text{Period of Exposure in days}}{70 \text{ years} \times 365 \text{ days per year}} \times 10^{-6} \qquad (6\text{-}1)$$

The potential for adverse noncarcinogenic effects from chemical exposure is expressed in terms of the hazard quotient (HQ). The HQ is the ratio of the estimated dose that a human receives to the estimated dose level believed to be safe, or the applicable standard. The chemical-specific HQ values are summed across all chemicals to determine the total site noncancer hazard index (HI). If the HI value is less than 1, it is believed the risk of noncarcinogenic effects is low. If the HI exceeds 1, a potential for some noncarcinogenic effects may exist. However, because the applicable standards are derived in a conservative fashion, an HI value greater than 1 does not imply that an adverse effect will necessarily occur. The HQ was calculated using equation 6-2.

$$\text{HQ} = \frac{\text{Chemical Concentration}}{\text{RSL for Noncancer Endpoint}} \qquad (6\text{-}2)$$

where:

Chemical Concentration	=	estimated influent concentration (Tables 3-11 through 3-15);
Period of Exposure	=	56 days
Average Lifetime	=	70 years (carcinogenic effects are averaged over a lifetime).

Assumptions for risk/hazard calculations are:

1. Chemical concentrations in groundwater are assumed to remain constant over the duration of exposure (i.e., 20 years);
2. No dilution or attenuation of the concentration is expected to occur prior to ingestion at the tap by the consumer;
3. The number of days untreated water is released from the treatment plant is 14 and treatment fails on four separate occasions (i.e., total of 56 days) over a 20-year period;
4. Carcinogenic effects are not based on a threshold, as are noncancer effects, and are averaged over a lifetime of exposure (i.e., 70 years).

Risk and hazard estimates for the site are compared with the EPA *de minimus* cancer risk criterion of 10^{-6} and noncancer HI of 1. Estimates of the cancer risk and noncancer HI are provided in Tables 6-1 through 6-8 for the chemicals identified in the water treatment plant influent estimates. Radionuclides are evaluated separately from non-radionuclides and these comparisons are included within Tables 6-1 through 6-8.

It should be noted that the screening process for lead is conducted a little differently because of the way lead exposure is evaluated (i.e., through blood lead levels, rather than by adverse toxic effects). Therefore, maximum concentrations of lead are compared directly to the action level of

15 µg/L, rather than deriving risk ratios and estimates of the HQ to determine whether concentrations may be associated with unsafe levels. The results are not included in the summation of noncarcinogenic hazard.

6.3.2.1 Influent to PWP Treatment System

For the influent to the water treatment plant for the Arroyo Well and Well 52, the risk assessment results for all chemicals detected are summarized in Table 6-1. The cumulative cancer risk (i.e., summation of risk across all chemicals) is 2×10^{-7}, which is considered a *de minimus* risk level. However, the HI is above 1 (HI = 4), primarily due to perchlorate (HQ = 2). None of the other chemicals had HQ values exceeding 1.

Radionuclides were evaluated separately as presented in Table 6-2 because RSLs are not available for these compounds. Based on a comparison to MCLs, it is assumed that the influent concentrations of these compounds would be acceptable should the treatment system malfunction. Similarly, the estimated influent concentration of lead is lower than the action level and therefore not considered to be a health concern. Estimated concentrations of chromium (total and hexavalent) and chlorate also are much less than their respective MCL and NL.

6.3.2.2 Influent to LAWC Treatment System

For the influent to the water treatment plant for the LAWC wells (Table 6-3) when the risk is calculated for all chemicals detected, the cumulative cancer risk is 8×10^{-8}, which is below the 1×10^{-6} *de minimus* risk level. The noncancer HI is 0.8, which is below the target of 1.

Radionuclides were evaluated separately as presented in Table 6-4 because RSLs are not available for these compounds. Based on a comparison to MCLs, it is assumed that the influent concentrations of these compounds would be acceptable should the treatment system malfunction. Similarly, the estimated influent concentration of lead is lower than the action level and therefore not considered to be a health concern. The estimated concentration of chromium (hexavalent) also is much less than the MCL (for total chromium).

6.3.2.3 Las Flores Treatment System

For the influent to the water treatment plant for the Las Flores well (Table 6-5) when the risk is calculated for all chemicals detected, the cumulative cancer risk (i.e., summation of risk across COPCs) is 1×10^{-7}, which is below the 1×10^{-6} *de minimus* risk level. The noncancer HI is 1, which is equivalent to the target threshold of 1.

Radionuclides were evaluated separately as presented in Table 6-6 because RSLs are not available for these compounds. Based on a comparison to MCLs, it is assumed that the influent concentrations of these compounds would be acceptable should the treatment system malfunction. The estimated concentration of chromium (hexavalent) also is much less than the MCL (for total chromium).

6.3.2.4 Rubio Cañon Treatment System

For the influent to the water treatment plant for the Rubio Cañon wells (Table 6-7) when the risk is calculated for all chemicals detected, the cumulative cancer risk (i.e., summation of risk across

COPCs) is 9×10^{-8}, which is below the 1×10^{-6} *de minimus* risk level. The HI for Rubio Cañon is 1, which is equivalent to the target HI of 1.

Radionuclides were evaluated separately as presented in Table 6-8 because RSLs are not available for these compounds. Based on a comparison to MCLs, it is assumed that the influent concentrations of these compounds would be acceptable should the treatment system malfunction. Similarly, the estimated influent concentration of lead is lower than the action level and therefore not considered to be a health concern. Estimated concentrations of chromium (total and hexavalent) are much less than the MCL.

6.4 Summary

Risk ratios of the estimated influent concentrations, as determined in Section 3.3 (Tables 3-11 through 3-15), to risk-based screening levels for tap water (i.e., EPA RSLs) were used to estimate cancer risks and noncancer health hazards for chemicals known to be present or those that potentially may be present in the influent of the four water treatment systems. The calculated health risks and hazards are summarized in Tables 6-1 through 6-8. In all cases, the estimated cancer risks were below the *de minimus* level of 10^{-6} at all sites.

When non-cancer hazard indices were calculated for chemicals, the HIs for the LAWC, Las Flores, and Rubio Cañon sites were at or below the target of 1. The HI for the PWP system was estimated to be 4, primarily due to an estimated concentration of perchlorate of 62 µg/L (HQ = 2) in the influent. All of the other chemicals evaluated for the PWP system had HQs less than 1.

EPA RSLs are not derived for radionuclides. As such, radionuclide concentrations were qualitatively compared to MCLs. Concentrations of all of the radionuclides estimated in the four influent streams were less than respective MCLs; therefore, it is assumed that these concentrations would be acceptable if a system failure occurred. For chemical compounds without RSLs (i.e., total chromium, hexavalent chromium, chlorate, and lead), a qualitative comparison of estimated influent concentrations to MCLs and NLs yielded similar results; all concentrations were less than these water standards.

The estimation of exposure to these constituents in drinking water is conservative because this risk evaluation assumes that the influent concentration would remain constant over the entire exposure period (i.e., 56 days over 20 years) and that this water would be consumed directly without considering the mixing and dilution that would actually occur in the City of Pasadena water system. It is expected that concentrations will decrease over the duration of system operation such that future exposures under subsequent failure scenarios (if failure occurs) would be to concentrations less than respective drinking water standards. Furthermore, the likelihood of complete system failure occurring is low given the automation and programming capabilities that will be used in the design of the system to prevent such failures. Therefore, the risk of injury is considered to be low, given that the likelihood of system failure is low.

7.0 Identification of Alternatives

This section presents alternatives to using treated groundwater for domestic use from: (1) the PWP wells including the Arroyo Well, Well 52, Ventura Well, and Windsor Well; (2) LAWC Wells #3 and #5; (3) Rubio Cañon Well #4. In addition, risk factors and alternative uses of the treated water are evaluated.

7.1 Alternatives to Drinking Water from the Monk Hill Subarea

The primary alternative to using groundwater extracted from production wells in the Raymond Basin, including water treated at the PWP, LAWC, Rubio Cañon, and Las Flores treatment plants, is the use of imported water from the MWD of Southern California.

In 2008, PWP produced 37,174 acre-feet of water, which is equivalent to 12.1 billion gallons (PWP, 2008). Thirty-two percent (32%) of the water produced in 2008 was groundwater pumped from the Raymond Basin. Chlorine is added to all groundwater pumped from City wells before the water enters the City's distribution system. The remaining water was purchased, 65% from MWD of southern California and 3% from other agencies. The MWD water is a blend of Colorado River water delivered through the Colorado River Aquaduct and surface water from northern California, delivered through the California Aquaduct. MWD water is filtered and disinfected with chloramines at the Weymouth Filtration Plant in the City of La Verne.

The U.S. Department of the Interior mandated that MWD reduce its allocation of water from the Colorado River to the City of Pasadena and other cities throughout the region (MWD, 2003). Because of this mandate, PWP is pursuing other long-term options for ensuring a reliable future water supply. LAWC is currently purchasing water from MWD at the maximum capacity available based on the current system design; therefore, using additional water from MWD is not an alternative option for LAWC. However, water from the FMWD, which obtains its water from MWD, may be considered an alternate water supply source for LAWC, Rubio Cañon, and Las Flores.

Other options for PWP include increasing extractions from groundwater in the Raymond Basin, maximizing the use of spreading grounds (primarily the Arroyo Seco spreading grounds located immediately adjacent to Arroyo Well and Well 52), promoting water conservation, and evaluating the feasibility of using reclaimed water. Interconnections with nine other local water systems exist; however, these are intended for emergencies, shortages, or periods of high demand.

In addition to rehabilitating existing local wells, PWP is looking at alternative local resources to supplement supply shortfalls. In August 2009, PWP will begin capturing run-off from tunnels in the Arroyo Seco hillsides and diverting it to Brookside Golf Course (PWP, 2008). PWP also has rights to obtain water from the Los Angeles/Glendale Water Reclamation Plant. The master plan to bring this reclaimed water to the Pasadena area is currently under development. The first phase of construction for this project is scheduled for 2013. In addition, PWP is collaborating with the Foothill Water Coalition to bring raw water from Azusa to the Arroyo

Seco area for groundwater recharge. This long-term project is scheduled for completion in 15 to 20 years.

All of the above-mentioned water purveyors have adjudicated water rights to groundwater in the Monk Hill subarea of the Raymond Basin. Six of the nine drinking water supply wells for the four water purveyors have concentrations of perchlorate above the CDPH MCL, which means that installation of new production wells within the Monk Hill subarea is not a viable alternative due to the extent of perchlorate in the subarea. Therefore, treating water from the Monk Hill Subarea is an important component of the plan for ensuring a reliable future water supply. PWP began the design of a new perchlorate removal system that will bring the Sunset Reservoir wells, east of JPL, back into service. The facility will be able to treat 9,000 gallons of water per minute while preventing the perchlorate plume from moving eastward.

7.2 Evaluation of Existing Sources

Summaries of the water quality for water obtained from groundwater wells operated by PWP in 2008 (excluding the four wells in the Monk Hill subarea) and water purchased from MWD in 2008 are provided in Table 7-1. These data are compared against the projected water quality of water extracted and treated from drinking water supply wells in the Monk Hill subarea (Table 7-2). FMWD obtains water from the same MWD treatment plant as PWP; therefore, a separate analysis of FMWD water as an alternate source was not completed.

7.2.1 Comparison to Existing Sources

PWP tests its water (extracted from production wells located outside the Monk Hill subarea) regularly for organic chemicals, minerals, metals, bacteria, and total trihalomethanes using CDPH-approved methods. Table 7-1 provides summaries of constituents detected in PWP drinking water that have Federal and state drinking water standards. More than 100 regulated constituents and other constituents of interest have been tested but were not detected in water delivered by PWP (2008). Constituents that were not detected are not included in the table.

For both PWP and MWD, naturally occurring inorganic constituents and radionuclides were detected at levels less than drinking water standards. Perchlorate was detected occasionally in PWP groundwater, ranging from nondetect to 10.4 μg/L, with an average concentration of 5.3 μg/L, which is less than the MCL of 6 μg/L. The overall average concentration of perchlorate delivered to consumers was below analytical detection limits; no perchlorate was detected in MWD water in 2008. Overall, no chemical constituents or water quality parameters were detected above respective drinking water standards in PWP water or MWD water for the year 2008. Based on this comparison to drinking water standards, water obtained from PWP and MWD would not be associated with adverse health effects.

The comparison of the projected treated effluent concentrations to Pasadena groundwater and MWD treated surface water (Table 7-2) indicate that concentrations will be less than or consistent with water quality to current tap water. It is expected that since the water from the Monk Hill plant will be filtered through GAC, it would have a much lower concentration of organic precursors of disinfection byproducts versus the treated surface water from MWD.

7.2.2 Assurance of Supply

Rainfall is the main source of water that replenishes the Raymond Basin. The adjudicated water rights of PWP and other water agencies are intended to equal the water naturally replenished by the rain. However, during a drought and normal pumping, groundwater levels may drop. Nonetheless, the water rights in the Raymond Basin were established by court order in 1944 and will remain in place. LAWC, Las Flores, and Rubio-Cañon purchased additional water from FMWD. FMWD received an average of 43 to 47% Colorado River blended with State Water Project from Metropolitan's Weymouth Treatment Plant. FMWD does not anticipate groundwater quality challenges because it does not use groundwater as a source of supply.

PWP

Currently, groundwater from five active wells is directed to 18 reservoirs located throughout the city (currently, eight wells are inactive due to the presence of perchlorate [PWP, 2008]). Jones Reservoir is the largest and can hold up to 50 million gallons of water. The smallest reservoir, the Lida Reservoir, holds up to 0.43 million gallons of water. These reservoirs could provide potable water for approximately 2 to 5 days depending on seasonal demands. However, the city has a total of 27 interconnections with nine other local water systems that can supply water during emergencies, shortages, or periods of high demand, so it is unlikely that total water system failure would occur.

LAWC

Groundwater from two active wells is directed to 11 reservoirs located throughout the service area. South Glenrose is the largest and can hold up to 2.72 million gallons of water. The smallest reservoir is the Olive Avenue Sump, which can hold up to 200,000 gallons of water. These reservoirs provide a total of approximately 10 million gallons of water. LAWC also has a series of three connections, two with PWP and one with Las Flores, which can supply water during emergencies, shortages, or periods of high demand. Between 2006 and 2007, LAWC purchased 23% (878.4 acre-feet) of its water from FMWD (FMWD, 2007]). The five-year annual average (2002 – 2007) purchase of FMWD water made by LAWC was 1,322 acre-feet. Therefore, it is unlikely that total water system failure would occur. FMWD does not anticipate groundwater quality challenges because it does not use groundwater as a supply source.

Las Flores

Groundwater from one active well is directed to five reservoirs located throughout the service area. The Blending Sump is the smallest reservoir and can hold up to 33,000 gallons. The Cobb Reservoir is the largest reservoir and can hold up to 1.5 million gallons of water. Las Flores has a total reservoir capacity of 4.73 million gallons of water, and also maintains an emergency connection with LAWC. Las Flores purchases additional water (annual five-year average of 711 acre-feet between 2002 and 2007) (FMWD, 2007) from FMWD, so it is unlikely that total water system failure would occur. FMWD does not anticipate groundwater quality challenges because it does not use groundwater as a supply source.

Rubio Cañon

Eight reservoirs are located throughout the Rubio Cañon service area, including two Calaveras Tanks (506,000 gal each), three Maiden Lane Tanks (614,250 gal, 944,250 gal, and 1,770,000 gal), the Cañon Reservoir (3,420,000 gal), and two Zane Grey Tanks (25,000 gal each). Rubio Cañon has a total reservoir capacity of 7.8 million gallons of water, and also maintains an emergency

connection with PWP. Rubio-Cañon purchases additional water (annual five-year average of 1092 acre-feet between 2002 and 2007 [FMWD, 2008]) so it is unlikely that total water system failure would occur. FMWD does not anticipate groundwater quality challenges because it does not use groundwater as a supply source.

MWD

MWD is undergoing regulatory constraints with regard to the use of Colorado River water, and is actively pursuing alternative options to ensure future water supply. In March 2003, a report was developed by MWD entitled, "Report on Metropolitan's Water Supplies" in compliance with SB 221 and SB 610 (MWD, 2003). These new laws require water districts to develop and publish information on available and planned future water supplies in order to assist local public agencies making land use decisions. As described in this report, MWD and its member agencies have developed contingency supply sources to protect the reliability of the system. As a result of the reduced supply of Colorado River water, MWD has been maximizing storage and water transfer options and today has more than two million acre-feet of water in storage and intends to purchase up to 250,000 acre-feet of additional short-term water supplies. Long-term plans to meet reliability needs through water transfer programs, outdoor conservation measures, and development of additional local resources, such as recycling, brackish water desalination, and seawater desalination, have been expedited.

7.2.3 Interruptions to Service

PWP, LAWC, Las Flores and Rubio Cañon have instituted the following measures to help avoid interruptions to service:

- The water supply systems are equipped with SCADA systems to monitor each of the distribution systems. The SCADA systems allow the recognition of interruptions and/or failures to be identified much sooner than without the system. Interruptions of service could result if any infrastructural damage occurs as a result of natural factors (i.e., general wear and tear of system, earthquakes, and fires) or artificial factors (i.e., construction activities).
- The companies implement facilities maintenance programs for the water system mechanical equipment which enhances distribution system reliability and reduces power costs.
- Each water company has established and maintains partnerships with neighboring water agencies to provide water utility related services.
- PWP is also continuing to upgrade and replace old water mains for improved fire protection capability and system integrity.
- PWP is conducting an assessment and evaluation of all of its reservoirs for future seismic events. Based on the assessment and recommendations of staff, the department's capital improvement plan for the next 10 to 20 years may include increasing the reservoirs' lateral resisting capabilities.

The water that MWD imports from the Colorado River is transported via the 242-mile Colorado River Aqueduct. The aqueduct travels through the Mojave Desert, through mountains, five pumping plants, and 92 miles of tunnels. Water from MWD that originates in Northern

California is transported in the State Water Project's 444-mile California Aqueduct. Service may be interrupted if infrastructural damage occurs as a result of natural or artificial factors. The treated water obtained during operation of the drinking water production wells would reduce the potential for service interruptions, thereby increasing the safety of citizens of Pasadena during emergencies such as fires and earthquakes.

7.3 Evaluation of Disposal Alternatives

Groundwater extracted from the public drinking water supply wells will be treated and used for domestic purposes throughout the service areas of the four public water purveyors. As such, extracted groundwater will not be disposed of under this proposed plan. However, in the absence of operating the drinking water supply wells with centralized treatment, additional measures would be required by NASA at the JPL site to contain the existing perchlorate plume as part of a CERCLA removal action to prevent migration of chemicals of interest. Under this scenario, water extracted from groundwater remediation wells in the Monk Hill Subarea would need to be disposed of following treatment. Several options were evaluated by NASA with respect to site-specific conditions, including:

- Use as drinking water (centralized treatment)
- Return to the aquifer via reinjection
- Return to the aquifer via infiltration (i.e., Arroyo Seco spreading grounds)
- Supply as irrigation water
- Discharge to publicly owned treatment works (sanitary sewers)
- Discharge to drainage channels.

NASA does not have water rights in the Raymond Basin; therefore, it is preferred that the groundwater extracted for this removal action is either provided to a party with water rights (e.g., City of Pasadena) or is reintroduced to the aquifer to replace the extracted groundwater. The options of discharging the water to a publicly owned treatment works or drainage channels were eliminated from further consideration, due to the quantity of water that would be extracted. The option of using treated water for irrigation was eliminated from further consideration, due to the complexity of implementation and high costs (including the need for extensive water rights agreements, separate conveyance system or reservoir, and finding uses for the large quantity of water that would be generated year round).

7.3.1 Arroyo Seco Spreading Grounds

Discharge to the Arroyo Seco spreading grounds is a potentially viable end-use option for water. The Arroyo Seco spreading grounds are located between the JPL facility and the production wells and PWP has used the Arroyo Seco Basins to spread more than 20 cubic feet per second (cfs) over an extended period of time. However, it was determined that this option was not preferable over the long-term, for the following reasons:

- The expansion of the spreading grounds beyond their current areas could adversely impact the containment effectiveness of the removal action because the spreading grounds are located between the JPL facility and the production wells.

- Under the Raymond Basin adjudication, infiltration basins do not get full credit for the volume of water that is applied (i.e., 80% spreading credit). This means that water rights would have to be negotiated for 20% of the extracted water.

However, as a temporary end-use option, the existing spreading basins could be used for disposal of the treated groundwater. The estimated volume of water that could be discharged to the spreading basins is 470 acre-feet per month (assuming a 3,500 gpm flowrate). This volume could be handled by the basins on a short-term basis under typical conditions.

7.3.2 Reinjection of Treated Water

Reinjection of treated water appears to be a technically viable alternative. Adequate plume containment could be attained by extracting approximately 3,000 gpm of groundwater, and possibly less. The treated water would be pumped to a group of injection wells inside the western boundary of the JPL facility.

7.4 Conclusions and Recommendations

Information provided in this section focuses on the identification of alternate sources to the impaired drinking water source. Also presented in this section was information regarding alternatives for disposal of the extracted groundwater. A summary of the conclusions and recommendations for the alternative assessment is as follows:

- MWD and FMWD are the primary alternative sources of drinking water for the City of Pasadena, LAWC, Las Flores Water Company, and Rubio Cañon Land and Water Company.
- The U.S. Department of the Interior recently mandated that MWD reduce its allocation of water from the Colorado River to the City of Pasadena and other cities throughout the region; therefore, maximizing use of water rights in the Raymond Basin via production wells is an important component of ensuring reliable future water supply to customers.
- Treated groundwater from the Monk Hill subarea would provide water of comparable quality as that provided by production wells located outside the Monk Hill subarea and MWD, based on 2002 data.
- The treated water obtained during extraction from wells in the Monk Hill subarea would provide additional local service and reduce the potential for service interruptions, thereby increasing the safety of citizens of Altadena and Pasadena during emergencies such as fires and earthquakes.
- Based on the evaluation of alternatives, it is recommended that treated groundwater from the Monk Hill subarea be used to supplement other drinking water sources.

8.0 References

Agency for Toxic Substances and Disease Registry (ATSDR). 1999. *Public Health Assessment for Jet Propulsion Laboratory (NASA) Pasadena, Los Angeles County, California*. CERCLIS NO. CA9800013030. August 5.

American Society for Testing and Materials (ASTM). 2000. Standard Practice for Environmental Site Assessments: Phase I Environmental Site Assessment Process. Designation E1527–00.

Battelle. 2007. Technical Memorandum 2006 Groundwater Monitoring Summary (Including Fourth Quarter 2006 Sampling Event). National Aeronautics and Space Administration, Jet Propulsion Laboratory, Pasadena, California.

CH2M Hill. 2002. *Draft Sampling and Analysis Plan (SAP), Comprehensive Groundwater Monitoring Event for CDPH Policy Memo 97-005 Permit Application*. Prepared for National Aeronautics and Space Administration Jet Propulsion Laboratory.

California Department of Public Health. 1997. *Policy Memo 97-005 Policy Guidance for Direct Domestic Use of Extremely Impaired Sources*. 5 November.

California Department of Public Health. 2003a. Analysis and Reporting of Non-Target Volatile Non-Target Organic Compounds in Extremely Impaired Water Sources and Recycled Water by Method 524.2. September 10.

California Department of Public Health. 2003b. Analysis and Reporting of Non-Target Semi-Volatile Organic Compounds in Extremely Impaired Water Sources and Recycled Water Using Methods 3510C/8270C. September 10.

Department of Health Services, State of California. 2006. Perchlorate in California Drinking Water: Monitoring Update for Active and Standby Sources. March 1. Available at (http://www.dhs.ca.gov/ps/ddwem/chemicals/perchl/monitoringupdate.htm)

Dickerson, D. 2003. Memorandum to Regional Board Members: "Update on Perchlorate Groundwater Pollution Within the Los Angeles Region." California Regional Water Quality Control Board- Los Angeles Region. January 24.

CDPH, see California Department of Public Health (formerly Department of Health Services, State of California).

Ebasco Environmental. 1988. *Preliminary Assessment/Site Inspection Report*. Prepared for National Aeronautics and Space Administration/Jet Propulsion Laboratory. April.

Ebasco Environmental. 1990a. *Expanded Site Inspection Report for NASA-Jet Propulsion Laboratory*. Prepared for National Aeronautics and Space Administration/Jet Propulsion Laboratory. May.

Ebasco Environmental. 1990b. *Supplemental Information to the Expanded Site Inspection Report on the NASA-Jet Propulsion Laboratory*.

Environmental Data Resources (EDR). 2002. *The EDR Radius Map with Geocheck, Inquiry Number: 780927.4s*. May 15.

Foothill Municipal Water District (FMWD). 2007. Foothill Municipal Water District Management Report Fiscal Year 2006-07. December.

Foster Wheeler Environmental Corporation (FWEC). 1999a. *Final Remedial Investigation Report for Operable Unit 2: Potential On-Site Contaminant Source Areas*. Prepared for National Aeronautics and Space Administration/Jet Propulsion Laboratory.

Foster Wheeler Environmental Corporation (FWEC). 1999b. *Final Remedial Investigation Report for Operable Units 1 and 3: On-Site and Off-Site Groundwater*. Prepared for National Aeronautics and Space Administration/Jet Propulsion Laboratory.

Foster Wheeler Environmental Corporation (FWEC). 2000. *Draft Feasibility Study Report for Operable Units 1 and 3: On-Site and Off-Site Groundwater.* Prepared for National Aeronautics and Space Administration/Jet Propulsion Laboratory.

Geoscience. 2004. RBMB Database.

JPL Groundwater Sampling Program. 1993. *Summary of Groundwater Sampling Events Completed at JPL Prior to the CERCLA Remedial Investigation/Feasibility Study (RI/FS).*

National Aeronautics and Space Administration (NASA). 1994. *Final Superfund Community Relations Plan, NASA Jet Propulsion Laboratory.* NAS7.00794, NASA-JPL, SSIC No. 9661. January.

National Aeronautics and Space Administration (NASA). 2002. *Final Record of Decision and Remedial Action Plan for Operable Unit 2*. September.

National Aeronautics and Space Administration (NASA). 2003. *Revised Final, Operable Unit 1 Expanded Treatability Study Work Plan*. October.

National Aeronautics and Space Administration (NASA). 2004. *JPL Groundwater Modeling Report*. February.

National Aeronautics and Space Administration (NASA). 2005b. Nitrate Occurrence in the Monk Hill Subarea. National Aeronautics and Space Administration, Jet Propulsion Laboratory, Pasadena, CA. November.

National Aeronautics and Space Administration (NASA). 2006a. Final Interim Record of Decision for the Operable Unit 1 Source Area Groundwater. National Aeronautics and Space Administration, Jet Propulsion Laboratory, Pasadena, CA. December.

National Aeronautics and Space Administration (NASA). 2006b. Final Operable Unit 1 Remedial Design/Remedial Action Work Plan, . National Aeronautics and Space Administration, Jet Propulsion Laboratory, Pasadena, CA. November.

National Aeronautics and Space Administration (NASA). 2006c. Community Involvement Plan (Second Update) for the CERCLA Site at the Jet Propulsion Laboratory. August.

National Aeronautics and Space Administration (NASA). 2007a. Operable Unit 1 Source Area Treatment System Progress Report. National Aeronautics and Space Administration, Jet Propulsion Laboratory, Pasadena, CA. April.

National Aeronautics and Space Administration (NASA). 2007b. Technical Memorandum Additional Investigation Results. National Aeronautics and Space Administration, Jet Propulsion Laboratory, Pasadena, CA. January 31.

National Aeronautics and Space Administration (NASA). 2007c. Final Remedial Action Report for Operable Unit 2 National Aeronautics and Space Administration Jet Propulsion Laboratory, Pasadena, CA. March.

National Aeronautics and Space Administration (NASA). 2008a. Operable Unit 1 Source Area Groundwater Treatment System Installation Report. National Aeronautics and Space Administration, Jet Propulsion Laboratory, Pasadena, CA. January 8.

National Aeronautics and Space Administration (NASA). 2008. Draft Remedial Design/Remedial Action (RD/RA) Work Plan for the Monk Hill Treatment System (MHTS). National Aeronautics and Space Administration, Jet Propulsion Laboratory, Pasadena, CA. September.

National Aeronautics and Space Administration (NASA). 2009. Final Technical Memorandum Operable Unit 1 Source Area Treatment System Progress Report September 2008 through February 2009. National Aeronautics and Space Administration Jet Propulsion Laboratory, Pasadena, California. April.

Nevada Division of Environmental Protection (NDEP). 2006. Southern Nevada Perchlorate Cleanup Project Summary available at http://ndep.nv.gov/bca/perchlorate05.htm.

Metropolitan Water District (MWD). 2003. Report on Metropolitan's Water Supplies. http://www.mwd.dst.ca.us/.

Pasadena Water and Power (PWP). 2003. *Pasadena Power and Water 13th Annual Drinking Water Quality Report*. June.

Pasadena Water and Power (PWP). 2008. Consumer Confidence Report on Water Quality 2008.

RWQCB. 2002. General Waste Discharge Requirements for Groundwater Remediation at Petroleum Hydrocarbon Fuel and/or Volatile Organic Compound Impacted Sites. File No. 01-116. Regional Water Quality Control Board Los Angeles Region. January 24.

RWQCB. 1994. Water Quality Control Plan: Los Angeles Region, Basin Plan for the Coastal Watersheds of Los Angeles and Ventura Counties. Regional Water Quality Control Board Los Angeles Region. June 1994.

United States Environmental Protection Agency (EPA). 2005. Superfund Community Involvement Handbook. EPA 540-K-05-003. April.

United States Environmental Protection Agency (EPA). 2009. Regional Screening Levels (RSL) for Chemical Contaminants at Superfund Sites. RSL Table Update. April.

United States Environmental Protection Agency (EPA). 2002. Handbook of Groundwater Protection and Cleanup Policies for RCRA Corrective Action for Facilities Subject to Corrective Action Under Subtitle C of the Resource Conservation and Recovery Act. Office of Solid Waste and Emergency Response. EPA/530/R-01/015.

United States Environmental Protection Agency (EPA). 2000. Applicability of RCRA Section 3020 to In-Situ Treatment of Ground Water. Memorandum from Elizabeth A. Cotsworth, Director Office of Solid Waste, Office of Solid Waste and Emergency Response. Washington, DC. December 27.

United States Environmental Protection Agency (EPA). 1992. *Permits and Permit 'Equivalency' Processes for CERCLA On-Site Response Actions*. Memorandum from Henry L. Longest II, Director, Office of Emergency and Remedial Response. OSWER Directive No. 9355.7-03. February 19.

United States Environmental Protection Agency (EPA). 1989. *Applicability of Land Disposal Restriction to RCRA and CERCLA Ground Water Treatment Reinjection, Superfund Management Review: Recommendation No. 26*. Memorandum from Don R. Clay, Assistant Administrator, Office of Solid Waste and Emergency Response. OSWER Directive No. 9234.1-06. December 27.

Willdan. 2003. *Draft Initial Study, Environmental Checklist, and Mitigated Negative Declaration: La Cañada-Flintridge Sewer Collection System – Areas 3A, 3B, 4, and 5*. Prepared by Willdan, Industry, CA.

Appendix A
DHS Policy Memo 97-005

Memorandum

Date: November 5, 1997

To: Drinking Water Program
Regional and District Engineers

From: Division of Drinking Water and
Environmental Management

Subject: Policy Memo 97-005 Policy Guidance for Direct Domestic Use of Extremely Impaired Sources

A. General Philosophy

The primary goal of the Drinking Water Program (DWP) is to assure that all Californians are, to the extent possible, provided a reliable supply of safe drinking water. In furtherance of this goal, the DWP continues to subscribe to the basic principle that only the best quality sources of water reasonably available to a water utility should be used for drinking. When feasible choices are available, the sources presenting the least risk to public health should be utilized. Furthermore, these sources should be protected against contamination. Whenever possible, lower quality source waters should be used for nonconsumptive uses, such as irrigation, recreation, or industrial uses, which pose lower health risk.

The use of contaminated water as a drinking water source always poses a greater health risk and hazard to the public than the use of an uncontaminated source because of the chance that the necessary treatment may fail.

The use of an extremely impaired source should not be approved unless the additional health risk, relative to the use of other available drinking water sources, are known, minimized, and considered acceptable.

Water utilities (including wholesalers) should be encouraged to minimize the concentration of man-made toxic substances, naturally occurring contaminants, and pathogenic microorganisms in drinking water supplies, maximum contaminant levels (MCLs) notwithstanding.

Extremely impaired sources that contain or are likely to contain high concentrations of contaminants, multiple contaminants, or unknown contaminants (such as groundwater subject to contamination from a hazardous waste disposal site) should not be considered for direct human consumption where alternatives are available.

Where reasonable alternatives are available, high quality drinking water should not be allowed to be degraded by the planned addition of contaminants. In other words, the MCLs should not be used to condone contamination up to those levels where the addition of those contaminants can be reasonable avoided.

Drinking water quality and public health shall be given greater consideration than costs or cost savings when evaluating alternative drinking water sources or treatment processes.

The DWP recognizes that there are extremely impaired sources in California that need to be cleaned up and for which the resulting product water represents a significant resource that should not be wasted. In some situations, it may be reasonable to consider the use of these treated extremely impaired sources for domestic use. Some communities may not have any choice. In such cases, the public health principles as set forth in this policy should be used to guide the evaluation of such situations.

B. Purpose of Policy Guidance

The purpose of this guidance document is to set forth the position and the basic tenets by which DWP would evaluate proposals, establish appropriate permit conditions, and approve the use of an extremely impaired source for any direct potable use.

An extremely impaired source meets one or more of the following criteria:

- exceeds 10 times an MCL or action level (AL) based on chronic health effects,
- exceeds 3 times an MCL or AL based on acute health effects,
- is a surface water that requires more than 4 log *Giardia*/5 log virus reduction,
- is extremely threatened with contamination due to proximity to known contaminating activities
- contains a mixture of contaminants of health concern
- is designed to intercept known contaminants of health concern.

Examples include:

- Extremely contaminated ground water
- Effluent dominated surface water
- Oilfield produced water
- Water that is predominantly recycled water; urban storm drainage; treated or untreated wastewater; or agricultural return water
- Products of toxic site cleanup programs

It is recognized that the circumstances surrounding each situation may be different. Proposals for the use of extremely impaired sources, therefore, must be considered on a case-by-case basis.

C. Elements of an Evaluation Process for an Extremely Impaired Drinking Water Source

1. Source Water Assessment:

The purpose of the source water assessment for the extremely impaired source is to determine the extent to which the aquifer or surface water is vulnerable to contaminating activities in the area. There may be other contaminants associated with activities that contribute to the known contamination, or other contamination sources that have yet to impact the drinking water source. There may not be drinking water MCLs, Als or monitoring requirements established for these additional contaminants, but health related information may be available through other programs. The appropriate level of monitoring and treatment to produce a safe drinking water cannot be determined unless the activities that are affecting or may impact raw water quality are understood. The assessment should include:

- Delineation of the source water capture zone
- Identification of contaminant sources
    - Identify the origin of known contaminants found in the source water and predict contaminant level trends
    - Identify chemicals or contaminants used at or generated by facilities responsible for the known contamination
    - Identify all potential contaminant sources and determine the vulnerability of the water source to these contaminant sources

2. Full characterization of the raw water quality:

The appropriate level of monitoring and treatment to produce a safe drinking water cannot be determined unless the raw water quality is fully understood. The following categories should be considered to fully characterize the source water quality:

- Title 22 drinking water regulated and unregulated chemicals
- All chemicals for which drinking water action levels are established
- All chemicals listed pursuant to Safe Drinking Water and Toxic Enforcement Act of 1986
- Microbiological quality
- Priority pollutants
- Gross contaminant measures [total organic carbon (TOC), etc.]
- Any compounds identified under source water assessment.
- Determine variability of contaminant concentrations with time (seasonal and long term)
- Determine variability of contaminant concentrations with pumping rate.
- The detection of any contaminant identified in the raw water quality characterization (step 2) should require assessment of the impact on the source water pursuant to the source water assessment (step 1).

3. Source Protection:

There must be a program in place to control the level of contamination. At a minimum, best management practices for waste handling and waste reduction should be required. In addition, monitoring at the source should be conducted to determine the level of contamination

and to reasonable assure that the contamination level will not increase. Unless the level of contamination is known a determination cannot be made that the proposed treatment is sufficiently adequate and reliable to render the water potable.

If the use of an extremely impaired source is to be approved, the source of the contamination must be controlled to:

- Prevent the level of contamination from rising.
- Minimize the dependence on treatment.

4. Effective Monitoring and Treatment:

The treatment process used to treat the extremely impaired source prior to direct usage in a domestic water distribution system must be commensurate with the degree of risk associated with the contaminants present. As a minimum, treatment of extremely impaired sources shall include use of the best available treatment technology defined for the contaminant(s) by the Environmental Protection Agency. Furthermore, the treatment processes must have reliability features consistent with the type and degree of contamination.

All treatment processes used must be optimized to reliably produce water that contains the lowest concentration of contaminants feasible at all times. The entire flow from the extremely impaired source must pass through the complete treatment process or processes. Any water from other sources that is available for blending prior to entry into the distribution system should be used to provide an additional safety factor.

Multi-barrier treatment is a set of independent treatment processes placed in series, and designed and operated to reduce the levels of a contaminant. Each barrier should effectively reduce the contaminant by a significant fraction of the total required reduction. The treatment processes should address all the contaminants of public health concern in an extremely impaired source. Multi-barrier treatment may be appropriate when:

- The primary treatment is not sufficiently reliable;
- The primary treatment is of uncertain effectiveness;
- There is no direct way to measure the contaminant (e.g., pathogenic microorganism);
- The health effect of the contaminant is acute; and/or
- Very large reductions in contaminant concentration are required.

The description of the proposed monitoring and treatment should include the following:

- Performance standards (field measurable indicator of treatment efficiency);
    - Identify level to assure compliance with the treatment objective
    - The treatment objective for all contaminants should be optimized to the lowest extent feasible and must assure compliance with the MCL/AL at all times.

- Facilities for treating water containing specific contaminants for which the MCL is higher than the maximum contaminant level goal (MCLG) should be designed and operated to meet the MCLG where this can be accomplished in a cost effective manner.

- Operations plan that identifies all operational procedures, failure response triggers, and loading rates, including:
  - Process monitoring plan
  - Process optimization procedures
  - Established water quality objectives or goals
  - Level of operator qualification

- Reliability features
  - Response Plan for failure to meet the treatment objective
  - Alternative disposal methods
  - Shutdown triggers and restart procedures

- Compliance monitoring and reporting program
- Notification plan
- Extremely impaired source water quality surveillance plan

  The water quality surveillance plan should include monitoring between the origin of the contamination and the extremely impaired source that is proposed for drinking water.

5. Human Health Risks Associated with Failure of Proposed Treatment:

   Treatment technologies are not failure proof, and insufficiently treated or untreated water may, on occasion, pass through the treatment process and into the distribution system. An assessment must be performed that includes:

   - An evaluation of the risks of failure of the proposed treatment system.

     The proposed treatment system must be evaluated in terms of its probability to fail, thereby exposing customers to insufficiently treated or untreated drinking water from the extremely impaired source.

     All treatment failure modes are to be evaluated. The evaluation must include an assessment of the proposed frequency of monitoring as it relates to protection of the public from insufficiently treated or untreated drinking water.

   - An assessment of potential health risks associated with failure of the proposed treatment system. The health assessment must take into account:

- the duration of exposure to contaminated drinking water that would result from such a failure
- the human health risks associated with such exposure to insufficiently treated or untreated water over the course of that failure, considering the risks of disease from microbiological organism, and the risks of acute and chronic effects (including cancer risks) from chemical contaminants
- potential cumulative risks, due to multiple failures

When risks of adverse health effects from treatment failure are not acceptable, then additional treatment safeguards must be used for the protection of public health, or the proposal must be rejected.

6. Identification of alternatives to the use of the extremely impaired source and compare the potential health risk associated with these to the project's potential health risk.

Use of alternative sources of drinking water reasonably available to a water utility should be evaluated as to health risk (assuming MCLs are, or can be, met), and compared to the use of the extremely impaired source.

In evaluating the relative risk comparison of the extremely impaired source and alternative drinking water sources, additive effects of multiple contaminants are an important consideration. Generally, consideration of allowing direct potable use of an extremely impaired source should be limited to a single toxic contaminant or a limited number of similar chemicals that can be reliably treated with the same process.

The comparison of alternatives should include a comparison of the risks of treatment failure for the alternatives, as well as for the extremely impaired source (step 5).

7. Completion of the California Environmental Quality Act (CEQA) review of the project:

CEQA review of the project must be completed.

8. Submittal of a permit application:

The public water system(s) collecting, treating and distributing water from the extremely impaired source must submit a permit application for the use of the extremely impaired source that includes the items identified above. A supplier of treated water to a public water system is a water wholesaler and must be permitted as a public water system, as required by the Safe Drinking Water Act.

9. Public hearing:

   A public hearing must be held to identify concerns of consumers who will be served water from the extremely impaired source and to assure that all parties have a chance to provide relevant information.

10. DHS evaluation:

    DHS staff shall conduct an evaluation of the application and make recommendations.

11. Requirements for DHS approval:

    The following findings are required of DHS for approval to use an extremely impaired source:

    - Drinking water MCLs and AIs will not be exceeded if the permit is complied with, and
    - The potential for human health risk is minimized, and the risk associated with the project is less than or equal to the alternatives.

12. Issuance or denial of permit:

    DHS either issues a permit or denies a permit for the use of the extremely impaired source. If a permit is issued, it shall include all necessary treatment, compliance monitoring, operational, and reporting requirements.

<Original signed by>

David P. Spath, Ph.D., P.E., Chief

Appendix B
Results of the Comprehensive Groundwater Monitoring

1.0 Introduction

The comprehensive groundwater monitoring event was conducted to provide water quality data for additional analytes not previously analyzed in groundwater from the Arroyo Well and Well 52 and required to be analyzed by the California Department of Health Services (DHS) Policy Memorandum 97-005. As previously mentioned, since the Arroyo Well and Well 52 could not be sampled, it was necessary to sample monitoring wells within capture zones of these two production wells for the additional parameters.

The analyses required are summarized in Table 3A-1, DHS General Characterization Sampling. This table lists specific chemicals of interest to DHS and their required analytical methods. A significant number of analytical methods is needed to cover the category of Title 22 synthetic organic compounds (SOCs).

In addition, at the request of DHS, a list of the chemicals identified from known and potential sources within the capture zones was compared against previous analyses of groundwater samples to identify which chemicals had not been analyzed previously. This comparison is shown in Table 3A-2. The table indicates whether the chemical has been analyzed previously in groundwater from the JPL monitoring wells, the Arroyo Well, and Well 52. Selected information on the environmental fate of the chemical, whether the chemical is of human health concern, and whether the chemical would be detected indirectly by existing analytical methods (e.g., arsenic trioxide would be detected by the dissolved arsenic analysis) is included in Table 3A-2.

Based on this information, compounds were recommended for future monitoring, if appropriate. If the analysis previously had not included the analyte, the chemical was listed as a new analyte. New analytes recommended for monitoring included dioxins (because 1,2,3,4,6,7,8,9-octachlorodibenzo-p-dioxin [OCDD] was a COPC); cresols; di-isopropyl ether (DIPE); ethyl-tert-butyl ether (ETBE); formaldehyde; total petroleum hydrocarbons; methyl ethyl ketone; tert-amyl methyl ether (TAME); and tert-butyl alcohol (TBA). These compounds were added to the list of analytes for the comprehensive groundwater monitoring event either by specifying additional analytes for existing methods (e.g., DIPE, ETBE) or by adding new analytical methods (e.g., formaldehyde, dioxin).

The Request for Analysis table for the comprehensive groundwater monitoring event is shown in Table 3A-3. All of the analytical methods included in the comprehensive groundwater monitoring event were requested specifically by DHS or are included in the category of Title 22 synthetic organic compounds (SOCs) in the DHS General Characterization Sampling Table (Table 3A-1). Some additional parameters were included to evaluate treatment requirements for the planned groundwater treatment plant (e.g., chemical oxygen demand, biological oxygen demand, total dissolved solids, pH, oxidation reduction potential [Eh], hardness, and alkalinity). DHS requires that all state- and federal-regulated drinking water compounds (including MCLs, ALs, and California Public Health Goals) and "chemicals not regulated, but required to be monitored" be included in the groundwater quality evaluation. The total suspended solids analysis and bacteriological

analyses (fecal coliform, total coliform, and heterotrophic plate count) must be analyzed on the production wells when they are brought online; therefore, they are not included in the comprehensive groundwater- monitoring event.

In addition to the groundwater analyses required by the DHS, chemicals previously detected in groundwater were compiled and evaluated to ensure that all previously detected chemicals were included in the planned sampling event. Tentatively identified compounds (TICs) also were evaluated to assess whether any additional analytes needed to be added.

A review of the monitoring well data was completed to compile available information on TICs in groundwater samples taken within the Arroyo Well and Well 52 capture zones and to identify additional potential groundwater chemicals that are not covered by the routine analytical methods. TICs are compounds that are unidentified peaks on the chromatograms for the gas chromatography/mass spectroscopy (GC/MS) analyses of volatile organic compounds (VOCs) or semivolatile organic compounds (SVOCs). These compounds are not included in the list of standard analytes for each analytical method. Using the mass spectral signature for each unidentified peak, a tentative identification of the compound and its estimated concentration is made by computer comparison to a mass spectral library of tens of thousands of compounds. Because of the uncertainty associated with the identification of the compound, TIC data have very high error rates (over 50 percent) and conclusions are drawn in terms of generalities rather than specific compounds. For the JPL data set, the error rate may be larger, since a consistent TIC naming methodology was not used and retention times were not provided in the electronic data deliverable obtained from the laboratory.

TICs that were provided with the electronic data deliverables received from the laboratory for the JPL monitoring wells were compiled for further analysis. TICs were not provided with the groundwater analyses received from the DHS State water quality database for the Arroyo Well and Well 52. A summary of the TICs sorted by the number of detected values is provided in Table 3A-4.

The goal of this initial analysis of TICs was to remove chemicals that are system/analytical instrument artifacts (e.g., compounds that are common liquid-phase carriers in gas chromatography columns), lab/field contaminants, and/or compounds that are ubiquitous in the environment (e.g., petroleum hydrocarbons).

A total of 86 TICs were reported; however, only 20 specific compounds were tentatively identified (Table 3A-4). Thirteen of these 20 TICs were identified more than once and are listed in order of decreasing number of detections: acetone; ethylbenzene; carbon disulfide; tetrahydrofuran; 2,4-bis(1,1-dimethylethyl)phenol; cyclohexanone; 1,1,2-trichlorotrifluoroethane; isopropylbenzene; 2-methylpropane; dimethyl benzene; hexane; acetic acid, and isobutylene. Another nine TICs were identified only by the class of compound (e.g., "unknown alcohol, unknown phthalate, unknown alkene, unknown C8 acetate ester, unknown hydrocarbon, unknown polynuclear aromatic hydrocarbon, or unknown substituted oxetane scan"). No further analysis can be done with the compounds that are listed as unknowns (e.g., unknown scan #191, unknown retention time [RT]=2.51).

Only five TICs (2,4-bis(1,1-dimethylethyl)phenol, isopropylbenzene, 2-methylpropane, isobutylene, and acetic acid) of the 13 TICs identified more than once, have not been

previously analyzed by other methods for which the chemical is a target analyte (i.e. for which chemical is listed as a specific analyte in the analytical method). The other eight chemicals (acetone, carbon disulfide, ethylbenzene, tetrahydrofuran, cyclohexanone, 1,1,2-trichlorotrifluoroethane, dimethyl benzene, and hexane) were analyzed by other analytical methods. Acetone and carbon disulfide have each been detected only once in 78 samples by other analytical methods from JPL monitoring wells. Ethylbenzene has been analyzed and detected in 11 of 1,414 samples by other analytical methods. Tetrahydrofuran has been analyzed by other methods, but not detected in 78 samples. Cyclohexanone has been analyzed by other methods, but not detected in 19 samples. 1,1,2-Trichlorotrifluoroethane has been analyzed by other methods and detected in 3 of 188 samples. Dimethyl benzene, or mixed xylenes, has been analyzed and detected only in 4 samples out of 1,414 samples. Hexane is a common laboratory solvent, and without the lab blank data, it is impossible to ascertain whether it is present in groundwater. Hexane has not been specifically analyzed for in prior groundwater samples. This leaves only 2,4-bis(1,1-dimethylethyl)phenol, isopropylbenzene, 2-methylpropane, acetic acid, and isobutylene as potential chemicals in the groundwater. The laboratory used for the comprehensive groundwater monitoring event was notified of the potential presence of these compounds so that they could screen for them during the TICs analysis.

A review of compounds analyzed in samples from the Arroyo Well, Well 52, and JPL monitoring wells located within the capture zone of these production wells was conducted to determine the sampling criteria. The number of wells to be sampled for each analytical method was based on whether the parameter had been analyzed in previous groundwater monitoring events, the presence of historically detected groundwater chemicals (primarily VOCs or perchlorate), and sample location. There are essentially two sets of analyses that were conducted during this sampling event. The more comprehensive set of analyses was applied to 12 of the 22 sample locations that have historically shown higher chemical concentrations; the reduced set of analyses applied to the remaining 10 of the 22 sample locations that have historically shown little or no contamination. The dioxin analysis applied only to 4 of the 22 samples, since this compound has very low solubility and mobility in groundwater (see Table 3A-3).

Results obtained from the comprehensive groundwater monitoring event are provided in the tables listed below:

Table 3A-5	Summary of VOC Data for JPL Monitoring Wells
Table 3A-6	Summary of SVOC Data for JPL Monitoring Wells
Table 3A-7	Summary of Pesticides/PCBs Data for JPL Monitoring Wells
Table 3A-8	Summary of Explosives Data for JPL Monitoring Wells
Table 3A-9	Summary of Nitrogen/Phosphorus Pesticides and Organophosphorus Pesticides Data for JPL Monitoring Wells
Table 3A-10	Summary of Carbamates, Chloropicrin, Glyphosate, Endothall, Formaldehyde, Ethylene Glycol, Paraquat, Diquat, 1,2,3-Trichloropropane, EDB, and DBCP Data for JPL Monitoring Wells
Table 3A-11	Summary of Chlorophenoxy Herbicides Data for JPL Monitoring Wells

Table 3A-12 Summary of Dissolved Metals, Cyanide and Hexavalent Chromium Data for JPL Monitoring Wells

Table 3A-13 Summary of General Mineral, Physical, and Radiological Parameter Data for JPL Monitoring Wells

Table 3A-14 Summary of 1,4-Dioxane, Nitrosamines, Perchlorate and Chlorate Data for JPL Monitoring Wells

Table 3A-15 Summary of Dioxins and Furans Data for JPL Monitoring Wells

Table 3A-16 Summary of All Analytical Results.

State of California regulatory criteria for drinking water are also included in the data summary tables in order to evaluate the concentrations detected. The following four criteria were included on the tables: Primary Maximum Contaminant Level (MCL), Secondary MCL, Public Health Goal (PHG), and Action Level (AL). The lowest concentration limit of the Primary MCL, Secondary MCL, or AL was used as the applicable regulatory limit for each analyte. The PHG was not considered an applicable regulatory criterion because it is not enforceable and does not require notification to the public if exceeded. Although Secondary MCLs and ALs are not enforceable, they are considered applicable regulatory criteria because an exceedance of a Secondary MCL is required to be reported to DHS and an exceedance of an AL is required to be reported to the governing board of the local agency in which users of the drinking water reside.

In Tables 3A-5 through 3A-15 the Primary MCL, Secondary MCL, AL, and PHG are shown for each chemical. Detected values that exceed the applicable regulatory limit are shown by bolding the value and surrounding it by a box. Non-detected values (which represent the detection limit) that exceeded applicable regulatory limit are shown in bold. For some chemicals, the practical quantitation limit (PQL) that the lab uses to report the data is greater than the regulatory limit, however, the method detection limit (MDL) is less than the regulatory limit. In this instance, if a chemical is detected at a concentration less than the PQL, the data are flagged as an estimated value (J flag).

Some chemicals (e.g., 1,2-dibromoethane [EDB]) were included as an analyte in more than one analytical method. In this case the detection limit for EDB under EPA Method 524.2 (Table 3A-5) exceeded the regulatory limit (MCL of 0.05 : g/L), but the detection limit for EDB under EPA 504.1 (Table 3A-10) was less than the regulatory limit.

2.0 Discussion of Results

2.1 Volatile Organic Compounds

The groundwater was analyzed for VOCs using EPA Method 524.2. A few additional analytes were included in this method at the request of DHS. The additional analytes included were gasoline oxygenates (MTBE, DIPE, ETBE, TAME, and TBA), the ketone solvents (2-butanone [methyl ethyl ketone or MEK] and 4-methyl-2-pentanone [methyl isobutyl ketone or MIBK], dichlorodifluoromethane (Freon 112), and tetrahydrofuran.

The analytical results from the comprehensive groundwater monitoring event show that 13 VOCs were detected in the 22 monitoring well samples (Tables 3A-5 and 3A-16). Five of the 13 chemicals exceeded an MCL or AL (carbon tetrachloride; methylene chloride; tetrachloroethene [PCE]; trichloroethene [TCE]; and 1,1-dichloroethene [1,1-DCE]). Carbon tetrachloride concentrations detected ranged from 0.62 to 157 µg/L, exceeding the MCL of 0.5 µg/L in 7 of 22 samples. PCE was detected in groundwater from 12 of 22 monitoring wells with concentrations ranging from 0.3 to 21.2 µg/L. PCE concentrations in exceeded four monitoring wells exceeded the MCL of 5 µg/L. TCE was detected in groundwater samples from 16 of the 22 monitoring wells at concentrations ranging from 0.5 to 7.8 µg/L. TCE concentrations in three monitoring wells exceeded the MCL of 5 µg/L (MW-7, MW-8, and MW-14-2). 1,1- DCE was detected in only two monitoring wells with concentrations 0.3 J µg/L (MW-17-3) and 8.2 µg/L (MW-7); the J is a data qualifier flag that indicates the value is estimated. Only the MW-7 sample exceeded the MCL of 6 µg/L.

Methylene chloride was detected in groundwater from six monitoring wells (MW-3-5, MW-4-2, MW-4-5, MW-12-3, MW-17-4, and MW-18-3). Detected concentrations ranged from 0.4 J to 11,300 J µg/L and five samples exceeded the MCL of 5 µg/L. Two values were extremely high (7,350 µg/L in groundwater from MW-3-5 and 11,300 J µg/L in groundwater from MW-4-5). Methylene chloride is a common laboratory contaminant and was detected in the associated blanks of many of the samples, indicating the samples may have been cross contaminated in the field or laboratory. Methylene chloride was detected historically in the monitoring wells only once in groundwater from MW3-5 (7.5 µg/L) and once from MW-4-5 (1.0 µg/L).

Other detected VOCs that did not exceed MCLs or ALs include 1,1,2-trichlorotrifluoromethane (2 wells); 1,1-dichloroethane (4 wells); bromochloromethane (1 well); chloroform (18 wells); chloromethane (1 well); cis-1,2-dichloroethene (2 wells); ethylbenzene (1 well); styrene (1 well); and trichlorofluoromethane (1 well). Of these chemicals, four were detected in one well at low concentrations and, therefore, are not of significant concern: bromochloromethane (detected in MW-4-5 at 18 µg/L), ethylbenzene (detected in MW-3-5 at 1.1 J µg/L), styrene (detected in MW-3-5 at 0.5 J µg/L), and trichlorofluoromethane (detected in MW-8 at 0.4 J µg/L). 1,1-dichloroethane was detected in four wells: MW4-2 (0.4 µg/L), MW-10 (0.5 µg/L), MW-14-2 (0.5 µg/L), and MW-24-2 (0.3 µg/L). Cis-1,2-dichloroethene was detected in two wells: MW-21-3 (0.4 J µg/L) and MW-21-5 (2.7 µg/L). Chloroform was detected in 18 of 22 monitoring wells in concentrations ranging from 0.4 to 16.6 µg/L. With the exception of well sample MW-7 (16.6 µg/L), the majority of the

chloroform concentrations were between 0.4 and 2.9 μg/L. Chloroform is a common field contaminant and is present in tap water that is used for equipment decontamination.

The historical data for the Arroyo Well and Well 52 (Tables 3-1 and 3-2 in Section 3.0 of the report) show detections of 11 VOCs in the two wells: carbon tetrachloride; chloroform; TCE; PCE; 1,2-dichloroethane (1,2-DCA); ethylbenzene; bromodichloromethane; 1,1,2-trichlorotrifluroethane; 1,1,1-trichloroethane (TCA); dibromochloromethane; and methylene chloride. Of these detected VOCs, the average concentrations of carbon tetrachloride (4.7 μg/L) and 1,2-DCA (0.95 μg/L) exceed the MCLs (0.5 μg/L for both) in the Arroyo Well and the average concentration of carbon tetrachloride (1.2 μg/L) exceeds the MCL in Well 52. Methylene chloride was detected only twice in groundwater from the Arroyo Well at an average concentration of 0.30 μg/L and was detected once in groundwater from Well 52 at a concentration of 0.28 μg/L.

Of 10 VOCs detected in the monitoring well samples, only carbon tetrachloride exceeds its MCL (0.5 μg/L) in the estimated water quality for the Arroyo Well. The estimated arithmetic mean concentration for carbon tetrachloride in the Arroyo Well is 4.02 μg/L (Table 3-11 in Section 3.0 of the report).

Eight VOCs were detected in the JPL monitoring wells within the Well 52 capture zone. For the estimated water quality for Well 52, carbon tetrachloride exceeded the MCL with an arithmetic mean concentration of 1.71 μg/L (Table 3-12 in Section 3.0 of the report). Although methylene chloride was detected at concentrations exceeding its MCL, the presence of this constituent is attributed to cross contamination and not to JPL site activities.

The estimated influent concentration of carbon tetrachloride is 2.86 μg/L (Table 3-13 in Section 3.0 of the report).

2.2 Semivolatile Organic Compounds

Groundwater samples were analyzed for SVOCs using EPA Method 8270. The analytical results show that no SVOCs were detected in the JPL monitoring well groundwater samples. (Tables 3A-6 and 3A-16).

The historical data for the Arroyo Well and Well 52 show no detections of SVOCs. The SVOCs are listed as base/neutral and acid extractable organics (BNAs) in the historical data tables. Note that atrazine and simazine are discussed under organophosphorus pesticides in Section 2.3.2.

Based on data from the monitoring wells located within the individual capture zones of the Arroyo Well and Well 52, no SVOCs are estimated to be present in groundwater from either the Arroyo Well or Well 52 (Tables 3-11 and 3-12 in Section 3.0 of the report). Therefore, the estimated concentration for these chemicals is equal to half the detection limit because that is the value used for nondetect data (Table 3-13 in Section 3.0 of the report).

2.3 Pesticides/Polychlorinated Biphenyls and Herbicides

Pesticides, polychlorinated biphenyls (PCBs), and herbicides were analyzed by EPA Method 508 (Pesticides/PCBs), EPA Method 8141A (Organophosphorus Pesticides), EPA Method 507 (Nitrogen and Phosphorus Pesticides), EPA Method 8151A (Chlorophenoxy Herbicides), EPA Method 549.1 (Paraquat and Diquat), EPA Method 531.1 (Carbamates), EPA Method 551.1 (Chloropicrin), EPA Method 547 (Glyphosate), EPA Method 548 (Endothall), and EPA Method 504.1 (EDB and DBCP). This wide range of analytical methods is needed to cover all of the regulated pesticides and herbicides. These EPA methods also cover pesticides and herbicides that are required to be monitored for a municipal drinking water supply.

2.3.1 Pesticides/PCBs (EPA Method 508)

One pesticide was detected in groundwater from the JPL monitoring wells sampled (Tables 3A-7 and 3A-11). Propachlor was detected in groundwater from MW-18-4 at a concentration of 0.28 μg/L. However, the percent difference in the concentration value between the primary and confirmation columns was greater than 40 percent; therefore, this value is an estimated concentration as indicated by the qualifier flag of J in Table 3A-7. There is no regulatory criterion for Propachlor. Aldrin, alpha-benzene hexachloride (BHC), beta-BHC, delta-BHC, and dieldrin were not detected. The detection limit for the analysis method exceeds the ALs for these compounds. The contracted laboratory used the lowest achievable detection limit for these chemicals. The laboratory had agreed that detected chemicals with concentrations between the PQL and MDL would be given a qualifier flag of J. The only J-flagged data observed for the pesticides and PCBs was a single detection of Propachlor.

Historical data from the Arroyo Well and Well 52 indicate that only one herbicide, chlorothal (i.e., dacthal) was detected one time (it was only sampled for one time in each of the production wells). Other pesticides or PCBs were not detected (Tables 3-1 and 3-2). The detection limits for aldrin, alpha-BHC, beta-BHC, delta-BHC, and dieldrin for the historic water quality data for the Arroyo Well and Well 52 are the same as those used for the analyses in the comprehensive groundwater monitoring event.

Based on the results of the JPL monitoring wells located within the capture zone of the Arroyo Well, the estimated concentrations of pesticides and PCBs for the Arroyo Well include only one chemical, Propachlor, at a concentration of 0.28 μg/L (Table 3-11 in Section 3.0 of the report). This value is based on the one Propachlor detection. The estimated concentration for the Arroyo Well is less than the detection limit so this value is not considered to be meaningful. There are no estimated concentrations for other pesticides or PCBs for the Arroyo Well or Well 52 because they were not detected (Tables 3-11 and 3-12 in Section 3.0 of the report).

The estimated influent concentrations of the water to the groundwater treatment plant for the Arroyo Well and Well 52 show that the Propachlor concentration is 0.065 μg/L. No other pesticides or PCBs were detected; therefore, the estimated concentration for these chemicals is equal to half the detection limit. The value of half the detection limit is used for nondetect data (Table 3-13 in Section 3.0 of the report).

2.3.2 Organophosphorus Pesticides (EPA Method 8141A)

No organophosphorus pesticides were detected in groundwater samples from any of the JPL monitoring wells sampled (Tables 3A-9 and 3A-16).

Approximately half of these organophosphorus pesticides are included in the historical data for the Arroyo Well and Well 52. There were no detections of organophosphorus pesticides in Well 52 (Table 3-2 in Section 3.0 of the report).

Based on data from the monitoring wells located within the capture zones of the Arroyo Well and Well 52, no organophosphorus pesticides are estimated to be present in groundwater from either well. Therefore, the estimated concentration for these chemicals is equal to half the detection limit because that is the value used for nondetect data (Tables 3-11 and 3-12 in Section 3.0 of the report).

No organophosphorus pesticides were detected; therefore, these constituents are not expected to be present in the influent to the groundwater treatment plant (Table 3-13 in Section 3.0 of the report). Therefore, the estimated concentration for these chemicals in the influent is assumed to be equal to half the detection limit, which is the value used for all nondetect data.

2.3.3 Nitrogen and Phosphorus Pesticides (EPA Method 8141A)

No nitrogen and phosphorous pesticides were detected in the JPL monitoring wells (Tables 3A-9 and 3A-16).

Only a few nitrogen and phosphorous pesticides are included in the historical data for the Arroyo Well and Well 52 (Tables 3-1 and 3-2 in Section 3.0 of the report). Atrazine and simazine were detected in groundwater from the Arroyo Well at concentrations of 0.5 μg/L each (Table 3-1 in Section 3.0 of the report). These values are less than the Primary MCL of 1.0 μg/L for atrazine and 4.0 μg/L for simazine.

Based on data from the monitoring wells located within the capture zones of the Arroyo Well and Well 52, nitrogen and phosphorous pesticides are not estimated to be present. Therefore, the estimated concentration for these chemicals is assumed to be equal to half the detection limit, which is the value used for nondetect data (Table 3-11 and 3-12 in Section 3.0 of the report).

No nitrogen and phosphorous pesticides were detected; therefore, the estimated influent concentration for these chemicals is equal to half the detection limit (Table 3-13 in Section 3.0 of the report).

2.3.4 Chlorophenoxy Herbicides (EPA Method 8151A)

No chlorophenoxy herbicides were detected in groundwater (Tables 3A-11 and 3A-16). Only a few chlorophenoxy herbicides are included in the historical data for the Arroyo Well and Well 52 (Tables 3-1 and 3-2 in Section 3.0 of the report). None of the chlorophenoxy herbicides analyzed were detected.

Based on data from the monitoring wells located within the capture zones of the Arroyo Well and Well 52, the estimated concentrations of chlorophenoxy herbicides in groundwater from the Arroyo Well and Well 52 are anticipated to be below the detection

limit. The estimated concentrations for groundwater from the Arroyo Well and Well 52 are listed at half of the detection limit in Table 3-11 and Table 3-12 (in Section 3.0 of the report) because half of the detection limit is the value used for nondetect data.

The estimated groundwater treatment plant influent concentration for the chlorophenoxy herbicides is below the detection limit (Table 3-13 in Section 3.0 of the report). The estimated concentration for these chemicals is equal to half the detection limit, which is the value used for nondetect data.

2.3.5 Paraquat and Diquat (EPA Method 549.1)

Paraquat and Diquat were not detected in groundwater samples from any of the monitoring wells (Tables 3A-10 and 3A-16). These compounds were not included in the historical water quality data for the Arroyo Well and Well 52 (Tables 3-1 and 3-2 in Section 3.0 of the report).

Paraquat and Diquat were not detected in any of the monitoring wells located within the capture zones of the Arroyo Well and Well 52. Therefore, the estimated concentrations for these chemicals in groundwater from the Arroyo Well and Well 52 is equal to half the detection limit, which is the value used for nondetect data (Table 3-11 and 3-12 in Section 3.0 of the report).

Paraquat and Diquat were not detected and therefore, are not expected to be present in the groundwater treatment plant influent. Therefore, the concentration for these chemicals is equal to half the detection limit (Table 3-13 in Section 3.0 of the report).

2.3.6 Carbamates (EPA Method 531.1)

Carbamates were not detected in groundwater samples from any of the monitoring wells sampled (Tables 3A-10 and 3A-16). Two of these compounds, aldicarb and carbofuran, were included in the historical water quality data for the Arroyo Well and Well 52 (Tables 3-1 and 3-2 in Section 3.0 of the report). Aldicarb and carbofuran were analyzed for once in each well but were not detected.

Carbamates were not detected in any of the monitoring wells located within the capture zones of the Arroyo Well and Well 52. Therefore, the estimated concentrations for these chemicals in groundwater from the Arroyo Well and Well 52 is equal to half the detection limit, which is the value used for nondetect data (Table 3-11 and 3-12 in Section 3.0 of the report).

Carbamates were not detected and are not expected to be present in the groundwater treatment plant influent. Therefore, the concentration for these chemicals is equal to half the detection limit (Table 3-13 in Section 3.0 of the report).

2.3.7 Chloropicrin (EPA Method 551.1)

Chloropicrin was not detected in groundwater samples from the six monitoring wells sampled (Tables 3A-10 and 3A-16). Chloropicrin was included in the historical water quality data for the Arroyo Well and Well 52 (Tables 3-1 and 3-2 in Section 3.0 of the report). Each well was analyzed once for Chloropicrin, but it was not detected.

Chloropicrin was not detected in groundwater samples from six of the monitoring wells located within the capture zones of the Arroyo Well and Well 52. Therefore, the estimated concentration for Chloropicrin in groundwater from the Arroyo Well and Well 52 is equal to half the detection limit, which is the value used for nondetect data (Table 3-11 and 3-12 in Section 3.0 of the report).

The only other analyte detected under EPA Method 551.1 is chloroform, which was detected in groundwater from four of six monitoring wells. The detected concentrations ranged from 1.1 to 26 µg/L. Chloroform was also detected in 18 out of 22 samples under EPA Method 524.2, as discussed in Section 2.1.

EPA Method 551.1 also lists total trihalomethanes, which is the sum of chloroform, bromodichloromethane, dibromochloromethane, and bromoform concentrations. The Total Trihalomethanes detections shown in Table 3A-16 is the result of the chloroform detections.

Chloropicrin was not detected during the comprehensive groundwater monitoring event and is not expected to be present in the groundwater treatment plant influent. Therefore, the concentration for Chloropicrin is equal to half the detection limit (Table 3-13 in Section 3.0 of the report).

2.3.8 Glyphosate (EPA Method 547) and Endothall (EPA Method 548)

Glyphosate and Endothall were not detected in groundwater (Tables 3A-10 and 3A-16). These compounds were analyzed once in the historical data for the Arroyo Well and Well 52, but were not detected (Tables 3-1 and 3-2 in Section 3.0 of the report).

Based on data from the monitoring wells located within the capture zones of the Arroyo Well and Well 52, no Glyphosate or Endothall is projected to be present in groundwater from the Arroyo Well or Well 52. The estimated concentrations for these chemicals are equal to half the detection limit, which is the value used for nondetect data (Table 3-11 and 3-12 in Section 3.0 of the report).

Glyphosate and Endothall were not detected; therefore, the estimated influent concentrations for these chemicals are equal to half the detection limits (Table 3-13 in Section 3.0 of the report).

2.3.9 EDB and DBCP (EPA Method 504.1)

EDB and DBCP were not detected in groundwater from any of the monitoring wells sampled (Tables 3A-10 and 3A-16). These compounds were analyzed three times in the historical data for the Arroyo Well and Well 52, but were not detected (Tables 3-1 and 3-2 in Section 3.0 of the report).

Based on data from the monitoring wells located within the capture zones of the Arroyo Well and Well 52, no EDB or DBCP is estimated to be present in groundwater from the Arroyo Well or Well 52. The estimated concentration for these chemicals in Tables 3-11 and 3-12 (in Section 3.0 of the report) is equal to half the detection limit, which is the value used for nondetect data.

EDB and DBCP were not detected; therefore, based on this data, the estimated groundwater treatment plant influent concentration for these chemicals is equal to half the detection limit (Table 3-13 in Section 3.0 of the report).

2.4 Other Synthetic Organic Chemicals

2.4.1 Explosives (EPA Method 8330)

Three explosive compounds were detected in samples from groundwater monitoring wells sampled during the comprehensive groundwater monitoring event: 2,4,6-trinitrotoluene (TNT); HMX (High Velocity Military Explosive; octogen; octahydro-1,3,5,7-tetranitro-1,3,5,7-tetrazocine); and RDX (Royal Demolition Explosive; cyclotrimethylenetrinitramine) (Tables 3A-8 and 3A-16). There are no regulatory criteria for these explosives.

TNT was detected in groundwater from 5 of the 22 monitoring wells (MW-3-3, MW-4-1, MW-4-2, MW-12-5, and MW-16) at concentrations ranging from 2.2 to 25.7 μg/L. The arithmetic mean for TNT in the monitoring well samples is 2.00 μg/L. The arithmetic mean is less than the lowest detected concentration value because the nondetects are assumed to be half the detection limit when calculating the statistical summaries. HMX was detected in groundwater samples from 2 of the 22 monitoring wells (MW-3-3 and MW-4-1) in concentrations ranging from 0.7 to 2.5 μg/L; the arithmetic mean HMX concentration is 0.59 μg/L. RDX was detected in groundwater from six of the monitoring wells (MW-3-3, MW-4-1, MW-4-2, MW-12-3, MW-12-5, and MW-16) in concentrations ranging from 0.66 to 27.3 μg/L and averaging 2.05 μg/L. HMX is used as an explosive charge when desensitized, as a booster charge in mixtures with TNT, and as an oxidizer in solid rocket and gun propellants. RDX is an explosive material widely used by the military and is a minor component of HMX (2 to 7 percent).

These three explosives are not included in the historical data for the Arroyo Well and Well 52 (Tables 3-1 and 3-2 in Section 3.0 of the report). Two explosives (2,4-dinitrotoluene and 2,6-dinitrotoluene) were included in the historical data for one sample event and were not detected.

Based on data for the monitoring wells located within the capture zone of the Arroyo Well, the estimated concentrations of the detected explosives for the Arroyo Well are 4.74 μg/L TNT; 1.18 μg/L HMX; and 5.26 μg/L RDX (Table 3-11 in Section 3.0 of the report). Based on data for the monitoring wells located within the capture zone of Well 52, the estimated concentrations of detected explosives for Well 52 are 0.61 μg/L TNT; and 0.53 μg/L RDX (Table 3-12 in Section 3.0 of the report).

Based on the data for the monitoring wells located within the capture zones of the Arroyo Well and Well 52, the estimated water quality of the groundwater treatment plant influent is 2.85 μg/L TNT; 0.75 μg/L HMX; and 3.05 μg/L RDX (Table 3-13 in Section 3.0 of the report).

2.4.2 1,2,3-Trichloropropane (EPA Method 504.1)

1,2,3-Trichloropropane (1,2,3-TCP) was detected in groundwater from 2 of the 12 monitoring wells sampled during the Comprehensive Groundwater Monitoring Event:

MW-12-3 (0.024 μg/L) and MW-18-4 (0.071 μg/L). These two values exceed the AL of 0.005 μg/L (Tables 3A-10 and 3A-16).

Historical data for the Arroyo Well and Well 52 indicate that the analysis included 1,2,3-TCP 27 times for the Arroyo Well and 53 times for Well 52, but it was not detected (Tables 3-1 and 3-2 in Section 3.0 of the report). However, the detection limits for the historical data ranged from 0.005 to 0.20 μg/L, with the majority of the samples being analyzed at the 0.005 μg/L limit (the current AL is 0.005 μg/L).

Based on data from monitoring wells located within the capture zone of the Arroyo Well, the estimated concentration of 1,2,3-TCP in groundwater from the Arroyo Well is 0.025 μg/L (Table 3-11 in Section 3.0 of the report), which exceeds the AL of 0.005 μg/L. 1,2,3-TCP is not expected to be present in groundwater from Well 52 because 1,2,3-TCP was not detected in any of the four monitoring wells located within the capture zone of Well 52. Based on data from monitoring wells located within the capture zone of Well 52, the estimated concentration of 1,2,3-TCP for Well 52 is equal to half the detection limit (Table 3-12 in Section 3.0 of the report). Half the detection limit is the value used for nondetect data.

The estimated water quality of the influent to the groundwater treatment plant for the Arroyo Well and Well 52 is 0.015 μg/L 1,2,3-TCP, which exceeds the AL of 0.005 μg/L (Table 3-13 in Section 3.0 of the report).

2.4.3 Formaldehyde (EPA Method 8315A)

Neither formaldehyde nor any of the other analytes under EPA Method 8315A were detected in any of the six monitoring wells sampled (Tables 3A-10 and 3A-16). Formaldehyde was not included in the historical water quality data for the Arroyo Well and Well 52 (Tables 3-1 and 3-2 in Section 3.0 of the report).

Based on data from the monitoring wells located within the capture zones of the Arroyo Well and Well 52, formaldehyde is not expected to be present in groundwater from the Arroyo Well and Well 52. The estimated concentration for both production wells is equal to half the detection limit, which is the value used for nondetect data (Table 3-11 and 3-12 in Section 3.0 of the report).

Formaldehyde was not detected and, therefore, is projected not to be present in the influent to the groundwater treatment plant for the Arroyo Well and Well 52. The value of half the detection limit is used for nondetect data (Table 3-13 in Section 3.0 of the report).

2.4.4 Ethylene Glycol (EPA Method 8015M)

Ethylene glycol was not detected in groundwater from any of the six wells sampled (Tables 3A-10 and 3A-16). Ethylene glycol was not included in the historical water quality data for the Arroyo Well and Well 52 (Tables 3-1 and 3-2 in Section 3.0 of the report).

Based on data from the monitoring wells located within the capture zones of the Arroyo Well and Well 52, ethylene glycol is not estimated to be present in groundwater from the Arroyo Well and Well 52. Therefore, in Tables 3-11 and 3-12 (in Section 3.0 of the report), the estimated concentration is equal to half the detection limit, which is the value used for nondetect data.

Ethylene glycol was not detected and, therefore, is estimated not to be present in the influent to the groundwater treatment plant for the Arroyo Well and Well 52. In Table 3-13 (in Section 3.0 of the report), the estimated influent concentration of ethylene glycol to the groundwater treatment plant is equal to half the detection limit, which is the value used for nondetect data.

2.4.5 1,4-Dioxane (EPA Method 8270 SIM)

1,4-Dioxane was detected in groundwater from 9 of the 22 monitoring wells sampled (Tables 3A-14 and 3A-16). The concentration range is from 0.6 to 3 μg/L, and the arithmetic mean concentration is 0.96 μg/L. The maximum concentration detected was 3 μg/L, which is equal to the AL; there are no other regulatory criteria for 1,4-dioxane.

Analysis of 1,4-dioxane was not included in historical water quality data for the Arroyo Well or Well 52 (Tables 3-1 and 3-2 in Section 3.0 of the report).

Based on monitoring wells located within the capture zone of the Arroyo Well, the estimated concentration of 1,4-dioxane in groundwater from the Arroyo Well is 1.0 μg/L (Table 3-11 in Section 3.0 of the report). Based on monitoring wells located within the capture zone of Well 52, the estimated concentration of 1,4-dioxane for Well 52 is 0.72 μg/L (Table 3-12 in Section 3.0 of the report). These concentrations do not exceed the AL.

Based on the monitoring well samples, the estimated concentration of 1,4-dioxane in the influent to the groundwater treatment plant for the Arroyo Well and Well 52 is 0.86 μg/L, which does not exceed the AL (Table 3-13 in Section 3.0 of the report).

2.4.6 Nitrosamines (Method MOE MSABN-E3291A)

The analysis for nitrosamines included the NDMA, n-nitrosodiphenylamine, and n-nitrosodi-n-propylamine. These compounds were analyzed under two different analytical methods: EPA Method 8270 and Method MOE MSABN-E3291A. The three analytes are included under EPA Method 8270; however, the detection limits for EPA Method 8270 are 1.0 μg/L, which are greater than the AL of 0.010 μg/L for NDMA. Therefore, these compounds were analyzed by a method with low-level reporting limits: MOE MSABN-E3291A. This method was used by the Canadian laboratory (Maxxam Analytics) that completed the low-level NDMA analyses. Maxxam is certified by the State of California for NDMA analyses. According to Maxxam, Method MOE MSABN-E3291A and EPA Method 607/1625 Modified are equivalent. The detection limits for Method MOE MSABN-E3291A are 0.005 μg/L for n-nitrosodi-n-propylamine and n-nitrosodiphenylamine and 0.002 μg/L for NDMA.

There are no MCLs or ALs for n-nitrosodi-n-propylamine and n-nitrosodiphenylamine, but NDMA has an AL of 0.010 μg/L. Therefore, data from Method MOE MSABN-E3291A has been used to assess the concentrations of NDMA for comparison to the AL (Tables 3A-14 and 3A-16).

NDMA was detected in groundwater from 4 of 22 wells that were sampled (Tables 3A-14 and 3A-16). The concentration range is from 0.00044 J to 0.00575 μg/L. None of the detected NDMA values exceeds the AL of 0.010 μg/L. NDMA was detected in the associated blanks of 10 of the samples. It is possible that the samples may have been cross

contaminated in the laboratory. N-nitrosodi-n-propylamine was detected in 1 of 22 monitoring wells sampled (MW-3-5) at 0.125 μg/L. N-nitrosodiphenylamine was detected in 14 of 22 monitoring well samples with concentrations ranging from 0.00148 J to 0.0249 J μg/L (Tables 3A-14 and 3A-16). These detections occur at very low reporting limits.

The historical water quality data for the Arroyo Well and Well 52 (Tables 3-1 and 3-2 in Section 3.0 of the report) show that these three nitrosamine compounds were analyzed once in groundwater from both wells with a detection limit of 0.5 μg/L, which exceeds the current AL of 0.010 μg/L. These compounds were not detected at the 0.5 μg/L detection limit.

Based on data from the monitoring wells located within the capture zone of the Arroyo Well, the estimated arithmetic mean concentrations in the Arroyo Well for the nitrosamines are 0.0015 μg/L NDMA, 0.018 μg/L n-nitrosodi-n-propylamine, and 0.005 μg/L n-nitrosodiphenylamine (Table 3-11 in Section 3.0 of the report). Based on data from the monitoring wells located within the capture zone of Well 52, estimated concentrations in groundwater from Well 52 for these compounds is 0.001 μg/L NDMA, 0.003 μg/L n-nitrosodi-n-propylamine, and 0.002 μg/L n-nitrosodiphenylamine (Table 3-12 in Section 3.0 of the report). The estimated NDMA in the Arroyo Well and Well 52 is less than the AL of 0.010 μg/L.

Based on data from monitoring wells located within the capture zones of the Arroyo Well and Well 52, estimated influent concentrations for the groundwater treatment plant for these compounds are 0.0013 μg/L NDMA, 0.0107 μg/L n-nitrosodi-n-propylamine, and 0.0036 μg/L n-nitrosodiphenylamine (Table 3-13 in Section 3.0 of the report). The 0.010 μg/L AL for NDMA is not exceeded in the estimated groundwater treatment plant influent.

2.4.7 Dioxins and Furans (EPA Method 8290)

Dioxins and furans were not detected (Tables 3A-15 and 3A-16). These compounds were not included in the historical water quality data for the Arroyo Well and Well 52 (Tables 3-1 and 3-2 in Section 3.0 of the report).

Based on data from the monitoring wells located within the capture zones of the Arroyo Well and Well 52, dioxins and furans are projected not to be present in groundwater from the Arroyo Well and Well 52. The estimated concentrations for these chemicals are equal to half the detection limit since that is the value used for nondetects (Table 3-11 and 3-12 in Section 3.0 of the report).

Dioxins and furans were not detected and, therefore, the concentrations of these chemicals in the influent to the groundwater treatment plant are estimated to be below the detection limit. The concentrations of the dioxins and furans are listed as half the detection limit in Table 3-13 (in Section 3.0 of the report).

2.5 Title 22 Regulated and Unregulated Metals

The analytical results show that 25 metals were detected in the groundwater monitoring well samples (Tables 3A-12 and 3A-16). These metals are naturally occurring in

groundwater. Two of these metals, manganese and iron, exceed secondary MCLs. Manganese concentrations ranged from 0.1 J to 86.6 µg/L, exceeding the secondary MCL of 50 µg/L. Iron concentrations ranged from 45.5 to 1,650 µg/L, exceeding the secondary MCL of 300 µg/L. Other metals detected that did not exceed MCLs or ALs include arsenic, barium, boron, calcium, total chromium, chromium VI (hexavalent chromium), magnesium, potassium, sodium, vanadium, copper, nickel, cobalt, lead, zinc, selenium, aluminum, antimony, beryllium, thallium, cadmium, silver, and mercury.

The historical data for the Arroyo Well and Well 52 (Tables 3-1 and 3-2 in Section 3.0 of the report) show detections of 13 metals for the two wells combined: aluminum, arsenic, barium, boron, calcium, chromium, chromium VI, copper, lead, magnesium, potassium, sodium, and vanadium. None these 13 detected metals had average concentrations that exceed MCLs or ALs.

Based on the groundwater analyses from monitoring wells within the capture zone of the Arroyo Well and Well 52 that were sampled during the comprehensive groundwater monitoring event, the estimated water quality of groundwater from the Arroyo Well and Well 52 contain 24 detected metals. None of these metals has an average concentration that exceeds MCLs or ALs (Tables 3-11 and 3-12 in Section 3.0 of the report).

Based on the comprehensive groundwater monitoring event data for the monitoring wells located within the capture zones of the Arroyo Well and Well 52 (Table 3-13 in Section 3.0 of the report), the estimated influent concentrations for the groundwater treatment plant show that none of the metals detected exceed the MCLs or ALs.

2.6 Anions, General Physical/Chemical, and Inorganic Parameters

Anions, general physical/chemical parameters, and inorganic constituents were analyzed in groundwater samples from the monitoring wells included in the comprehensive groundwater monitoring event.

2.6.1 Anions (Bromide, Chloride, Fluoride, Nitrate, Nitrite, Sulfate) (EPA Method 300.0)

The analytical results from the comprehensive groundwater monitoring event show that bromide, chloride, fluoride, nitrate (as nitrogen), and sulfate were detected (Tables 3A-13 and 3A-16). Bromide, chloride, fluoride, and sulfate are naturally occurring constituents in groundwater. Only the fluoride concentrations, which range from 0.74 to 4.1 mg/L, exceed the MCL of 2 mg/L. The other anions detected did not exceed MCLs or ALs.

These anions were included in the historical data received from the DHS database for the Arroyo Well and Well 52 (Tables 3-1 and 3-2 in Section 3.0 of the report); none of the concentrations exceeded regulatory standards.

The estimated average concentrations of anions from the monitoring wells located within their respective capture zones do not exceed the MCLs or ALs (Tables 3-11 and 3-12 in Section 3.0 of the report). The arithmetic mean concentrations for the Arroyo Well are 0.47 mg/L for bromide, 29.6 mg/L for chloride, 1.48 mg/L for fluoride, 2.77 mg/L for nitrate, and 41.8

mg/L for sulfate. The average concentrations for Well 52 are 0.87 mg/L for bromide, 56.3 mg/L for chloride, 1.37 mg/L for fluoride, 5.55 mg/L for nitrate, and 76.3 mg/L for sulfate.

The estimated concentrations of these anions in the influent to the groundwater treatment plant are based on data from the comprehensive groundwater monitoring event. The estimated influent concentrations from the monitoring wells located within the capture zones of the Arroyo Well and Well 52 (Table 3-13 in Section 3.0 of the report) show that none of the estimates exceed MCLs or ALs. The estimated concentrations are 0.67 mg/L for bromide, 42.9 mg/L for chloride, 1.43 mg/L for fluoride, 4.16 mg/L for nitrate, and 59.3 mg/L for sulfate.

2.6.2 General Physical/Chemical Parameters (Turbidity, Color, Hardness, Alkalinity, pH, Foaming Agents)

Turbidity, hardness, alkalinity, and pH are naturally occurring constituents of groundwater. In addition, some groundwater contains naturally occurring color and foaming agents (methylene blue-active substance [MBAS]). These constituents were analyzed by EPA Method 110.2 (color), EPA Method 130 (hardness), EPA Method 180.1 (turbidity), EPA Method 310.1 (alkalinity), EPA Method 9040B (pH), and EPA Method 425.1 (foaming agents).

The analytical results show that the parameters for color, hardness (as calcium carbonate), turbidity, alkalinity, pH, and foaming agents were detected at expected levels (Tables 3A-13 and 3A-16). The color units range from 5 to 25, which exceed the secondary MCL of 15 units. The turbidity range is from 0.27 to 38 nephelometric turbidity units (NTUs), which exceed the secondary MCL of 5 NTUs. It should be noted that turbidity values are commonly specific to the well from which the groundwater sample is obtained; production wells usually have much lower turbidity values than monitoring wells. The pH values range from 6.77 to 9.39. One value, 9.39, exceeds the secondary MCL range of 6.5 to 8.5 units. The hardness ranges from 93 to 564 milligrams per liter (mg/L), the alkalinity ranges from 123 to 273 mg/L, and the foaming agent concentrations range from 0.05 to 0.07 mg/L. There are no MCLs or ALs for hardness or alkalinity, and the secondary MCL for the foaming agents is not exceeded.

These parameters were included in the historical data received from DHS for the Arroyo Well and Well 52 (Tables 3-1 and 3-2 in Section 3.0 of the report).

The analyses of monitoring wells located within the respective capture zones of the Arroyo Well and Well 52 show that turbidity exceeds the MCLs or ALs (Tables 3-11 and 3-12 in Section 3.0 of the report). The average concentration is 5.21 NTUs for the Arroyo Well and 12.01 NTUs for Well 52. These values exceed the secondary MCL of 5 NTUs. The estimated turbidity for groundwater from the production wells based on data from monitoring wells is not considered reliable, as previously mentioned. The estimated concentrations of the other parameters for the Arroyo Well are 5.06 units for color, 215 mg/L for hardness, 170.2 mg/L for alkalinity, 0.03 mg/L for foaming agents, and 7.64 units for pH. The estimated concentrations of the other parameters for Well 52 are 6.38 units for color, 400 mg/L for hardness, 210 mg/L for alkalinity, 0.03 mg/L for foaming agents, and 7.65 units for pH.

Based on the data from monitoring wells located within the capture zones of the Arroyo Well and Well 52 (Table 3-13 in Section 3.0 of the report), the estimated influent concentrations for the groundwater treatment plant show that turbidity was the only parameter with an estimated average concentration that exceeds an MCL or AL. The estimated concentration for turbidity is 8.61 NTUs, which exceeds the secondary MCL of 5 NTUs. This value is not considered representative of the actual influent water quality. The estimated concentrations for the other parameters are 5.72 units for color, 297 mg/L for hardness, 188 mg/L for alkalinity, 0.03 mg/L for foaming agents, and 7.64 units for pH.

2.6.3 Other Inorganic Parameters (Perchlorate, Chlorate, and Cyanide)

Perchlorate was detected in groundwater samples from 7 of the 22 monitoring wells sampled, ranging in concentration from 3.05 to 13,300 μg/L (Tables 3A-14 and 3A-16). Most of the detected values exceed the AL of 4 μg/L; no MCLs are established for perchlorate. Chlorate was detected in 11 of 22 samples, ranging in concentration from 0.073J to 0.875 mg/L. There are no MCLs or ALs for chlorate. The perchlorate data in Tables 3A-14 and 3A-16 include data from the last round of quarterly sampling that was conducted in October and November 2002, immediately before the comprehensive groundwater monitoring event (SOTA, 2002b). The only monitoring well analyzed for perchlorate during the comprehensive groundwater monitoring event was MW 4-5 because it was not included in the quarterly sampling. It was decided to rely upon the earlier perchlorate data, because perchlorate had been monitored frequently in the past.

Cyanide was not detected in any groundwater monitoring well samples from the comprehensive groundwater monitoring event. Cyanide was added as a chemical of interest during the source water assessment.

The historical data for the Arroyo Well and Well 52 (Tables 3-1 and 3-2 in Section 3.0 of the report) show detections of perchlorate concentrations that range from 42 to 160 μg/L in the Arroyo Well and 6 to 38.8 μg/L in Well 52. Average perchlorate concentrations for the Arroyo Well and Well 52 were 96 μg/L and 22 μg/L, respectively. The average perchlorate concentrations estimated for the Arroyo Well and Well 52 exceed the AL. There are no historical data for chlorate. Cyanide was not analyzed previously in the Arroyo Well or in Well 52.

The estimated perchlorate concentrations for groundwater are 24.2 μg/L from the Arroyo Well and 16.3 μg/L from Well 52. These concentrations exceed the AL (Tables 3-11 and 3-12 in Section 3.0 of the report). The estimated chlorate concentrations are 120 μg/L for the Arroyo Well and 340 μg/L for Well 52 (Tables 3-11 and 3-12 in Section 3.0 of the report). There are no MCLs or ALs for chlorate.

Based on the data from the monitoring wells located within the capture zones of the Arroyo Well and Well 52 (Table 3-13 in Section 3.0 of the report), the estimated perchlorate concentration in the influent to the groundwater treatment plant is 20.25 μg/L, which exceeds the AL, and the estimated chlorate concentration is 225 μg/L.

2.7 Regulated Radioactivity Parameters

Historical radiologic water quality parameter data for the Arroyo Well (Table 3-1 in Section 3.0 of the report) and Well 52 (Table 3-2 in Section 3.0 of the report) demonstrate that measured values fall well below the Primary MCLs for gross alpha particle activity (MCL is 15 picoCuries per liter [pCi/L]), gross beta particle activity (MCL is 50 pCi/L), combined radium 226 and radium 228 (MCL is 5 pCi/L), and uranium (MCL is 20 pCi/L). Values for tritium, strontium-90, and radon were not found in the DHS database data. The gross beta values for the Arroyo Well ranged from 3.0 to 6.6 pCi/L, and the gross alpha values for Well 52 ranged from 2.4 to 7.0 pCi/L.

The monitoring wells in the comprehensive groundwater monitoring event were sampled for gross alpha particle activity and gross beta particle activity, which serve as screening parameters for radiologic species. The gross alpha and gross beta values were below their MCLs (Tables 3A-13 and 3A-16). Gross alpha particle activity ranged from 1.4 to 13.5 pCi/L and averaged 5.82 pCi/L. The high value of 13.5 pCi/L was from MW-21-5, which is near a potential source area. Gross Beta particle activity ranged from 2.09 to 9.16 pCi/L and averaged 4.63 pCi/L.

Based on the monitoring well analyses, the estimated (arithmetic mean) gross alpha for the Arroyo Well is 5.06 pCi/L, and the estimated gross beta is 4.42 pCi/L. Based on the monitoring well samples, the estimated gross alpha for Well 52 is 4.32 pCi/L, and the estimated gross beta is 4.34 pCi/L.

The estimated (arithmetic mean) groundwater treatment plant influent concentration is 4.73 pCi/L gross alpha particle activity and 4.38 pCi/L gross beta particle activity.

2.8 Water Quality Indicator Parameters

Water quality indicator parameters that were sampled in the comprehensive groundwater monitoring event include total dissolved solids (TDS), total organic carbon (TOC), biological oxygen demand (BOD), chemical oxygen demand (COD), total petroleum hydrocarbons-gasoline (TPH-gas), total petroleum hydrocarbons-diesel (TPH-diesel), and total petroleum hydrocarbons-motor oils (TPH-motor oils). TOC, BOD, and COD were sampled primarily to provide data on treatment parameters needed to design the groundwater treatment plant. These data are presented in Table 3A-13 and summarized in Table 3A-16.

2.8.1 Total Dissolved Solids (EPA 160.1)

The TDS of groundwater from the sampled monitoring wells ranges from 182 to 967 mg/L and averaged 409 mg/L, compared to a Recommended Secondary MCL of 500 mg/L and Upper Secondary MCL of 1,000 mg/L (Tables 3A-13 and 3A-16). Wells with TDS exceeding 500 mg/L include MW-4-2 (608 mg/L), MW-10 (821 mg/L), MW-14-2 (967 mg/L), MW-19-3 (837 mg/L), MW-21-3 (669 mg/L), and MW-21-5 (526 mg/L).

Historical monitoring data for the Arroyo Well and Well 52 included TDS data as shown on Tables 3-1 and 3-2 (in Section 3.0 of the report). The average concentration of TDS in the Arroyo Well and Well 52 were 494 and 316 mg/L, respectively.

Based on the monitoring well samples, the estimated (arithmetic mean) TDS for groundwater from the Arroyo Well and Well 52 is 315 mg/L and 462 mg/L, respectively. Both values are below the Recommended Secondary MCL (Tables 3-11 and 3-12 in Section 3.0 of the report).

The estimated (arithmetic mean) TDS for in the influent to the groundwater treatment plant for the Arroyo Well and Well 52 is 388 mg/L.

2.8.2 Biological Oxygen Demand (EPA 405.1)

BOD in groundwater from the monitoring wells sampled during the comprehensive groundwater monitoring event ranged from 0.67 to 2.6 milligrams (mg) oxygen per liter (O_2/L) and averaged 1.56 mg O_2/L (Tables 3A-13 and 3A-16). There are no regulatory standards for BOD in groundwater. Historical BOD data for the Arroyo Well and Well 52 were not found in the DHS database. The estimated concentration of BOD in groundwater from the Arroyo Well and Well 52 is 1.65 mg O_2/L and 1.36 mg O_2/L, respectively (Tables 3-11 and 3-12 in Section 3.0 of the report). The estimated BOD for influent into the groundwater treatment plant is 1.52 mg O_2/L for the arithmetic mean and 1.85 mg O_2/L for the upper 95th percentile confidence interval (Table 3-13 in Section 3.0 of the report).

2.8.3 Total Organic Carbon (EPA 415.1)

TOC (EPA 415.1) in groundwater from the monitoring wells sampled during the comprehensive groundwater monitoring event ranged from less than 1.1 mg/L to 7.3 mg/L and averaged 2.99 mg/L (Tables 3A-13 and 3A-16). There are no regulatory standards for TOC in groundwater. Wells with elevated TOC include MW-7 (7.3 mg/L), MW-8 (5.9 mg/L), MW-10 (6.4 mg/L), MW-16 (7 mg/L), and MW-16 (6.6 mg/L).

Historical TOC data for the Arroyo Well and Well 52 were not found in the DHS database. The estimated concentrations of TOC in groundwater from the Arroyo Well and Well 52 are 1.95 and 2.91 mg/L, respectively (Tables 3-11 and 3-12 in Section 3.0 of the report). The estimated TOC for influent into the groundwater treatment plant is 2.38 mg/L for the arithmetic mean and 3.84 mg/L for the upper 95th percentile confidence interval (Table 3-13 in Section 3.0 of the report).

2.8.4 Chemical Oxygen Demand (EPA 410.4)

COD (EPA 410.4) values for groundwater from the monitoring wells were less than 5 mg O_2/L (Tables 3A-13 and 3A-16). There are no regulatory standards for COD in groundwater.

Historical COD data for the Arroyo Well and Well 52 were not found in the DHS database. The estimated concentration of COD in groundwater from the Arroyo Well and Well 52 is less than 5 mg O_2/L (Tables 3-11 and 3-12 in Section 3.0 of the report). The estimated COD for influent into the groundwater treatment plant is also less than 5 mg O_2/L; the estimated concentration is equal to half the detection limit (Table 3-13 in Section 3.0 of the report).

2.8.5 Total Petroleum Hydrocarbons (EPA 8015M)

TPH-gas, TPH-diesel, and TPH-motor oil values are indicator parameters of petroleum products in groundwater. Each represents a different carbon (C) chain length fraction: TPH-gas (C_4 through C_{12}), TPH-diesel (C_{10} through C_{22}), and TPH-motor oil (C_{18} or greater).

TPH was analyzed by EPA Method 8015M. TPH-gas was not detected in groundwater from the 12 monitoring wells sampled. TPH-gas was detected in the associated blanks for 11 of the 12 samples. It is possible that the samples may have been cross contaminated in the laboratory. TPH-diesel was detected in groundwater from 3 of 12 monitoring well samples with a range of 0.01 J mg/L to 0.02 J mg/L. TPH-motor oils was detected in 2 of 12 monitoring well samples with estimated detected values (J-flagged) of 0.03 mg/L in MW-3-3 and 0.09 mg/L in MW-4-2 (Tables 3A-13 and 3A-16). There are no drinking water regulatory standards for TPH.

Historical TPH data for the Arroyo Well and Well 52 were not present in the DHS database.

The estimated concentrations of TPH-gas in groundwater from the Arroyo Well and Well 52 are 0.05 mg/L and 0.044 mg/L, respectively, based on using one-half the detection limits (Tables 3-11 and 3-12 in Section 3.0 of the report). The estimated concentrations of TPH-diesel in groundwater from the Arroyo Well and Well 52 are less than 0.363 mg/L and 0.368 mg/L, respectively. The estimated concentrations of TPH-motor oil are 0.270 mg/L and 0.388 mg/L, respectively. The estimated groundwater treatment plant influent is 0.047 mg/L TPH-gas, 0.365 mg/L TPH-diesel, and 0.329 mg/L TPH-motor oils. (Table 3-13 in Section 3.0 of the report).

3.0 Summary of Chemicals Identified in Draft Source Water Assessment

As part of the Source Water Assessment, DHS requested a comparison of chemicals used and wastes generated at JPL and other potential sites against previous analyses of groundwater samples to identify those chemicals that had not been detected. An evaluation of these chemicals was conducted to recommend those analytes that should be included in the comprehensive groundwater monitoring event. Information was evaluated regarding the environmental fate of the chemical and the human health concern of the chemical. Also considered was whether or not the chemical could be detected indirectly by existing analytical methods (e.g., arsenic trioxide would be detected by the dissolved arsenic analysis). Based on this information, chemicals were recommended for future monitoring, if appropriate. These chemicals are summarized in Table 3A-2.

The chemicals listed in Table 3A-2 were compared to the chemicals that were analyzed in groundwater samples as part of the groundwater monitoring event (Table 3A-16). Twelve of the 31 analytes recommended for testing were detected: arsenic trioxide (as arsenic); beryllium; chromic acid (as hexavalent chromium); cis-1,2-dichloroethylene; cobalt; fluoride; trichlorofluoromethane; fuming nitric acid (as nitrate); diesel; motor oil; nitrate; and total petroleum hydrocarbons (TPHs). Nitrate was the only analyte that exceeded regulatory criteria (exceeded its PHG).

Nineteen analytes from Table 3A-2 were not detected during the comprehensive groundwater- monitoring event: OCDD; 1,2-DCB; Arochlor-1242; Arochlor-1254; Arochlo-1260; butylbenzylphthalate; chlorobenzene; Freon 112; cresols (3/4 methylphenol); gasoline; DIPE; ETBE; fluorene; formaldehyde; MEK; PCBs; TAME; TBA; and 1,1,2-TCA.

TABLE 3A-1
DHS General Characterization Sampling Table for Policy Memo 97-005 Groundwater Monitoring
(Specific methods employed depend on the sampling purpose. See Notes below.)

Description	Method(s)	Comment
General Mineral/Physical	Various approved methods	None
Full Metals Scan	EPA Method 200.7 or approved methods for the 16 "CAM" metals and Title 22 metals. EPA Method 245.1 for Mercury and EPA Method 218.6 for Hexavalent Chromium	See Note 7. Utilization of EPA Method 200.8 (ICP/MS) may be necessary depending on results.
Perchlorate	DHS modified EPA Method 300.0 or EPA Method 314	None
N-nitrosodimethylamine (NDMA) [low level]	No approved method currently in place. Check DHS web site for update.	See note 8. Detection to < 2 ppt. With advance notice, confirmation of samples may be provided by the Department's Lab.
Nitroaromatics and Nitramines	EPA Method 8330	See note 9. Analyze for all 14 compounds listed in method.
Gross Alpha and Beta Radiation	EPA Method 900.0	None
Aldicarbs	EPA Method 531.1	None
Diquat and Paraquat	EPA Method 549.1	None
EDB and DBCP	EPA Method 504.1	None
1,2,3-TCP	Low level 1,2,3-Trichloropropane	See note 5. If required by DHS.
VOCs	EPA Method 524.2 or EPA Method 8260B with MTBE included	See notes 1, 2, 3, 4 and 10. Consult with DHS on specific method.
Semi-Volatile Organic Chemicals	EPA Method 8270C (all fractions) and modified for 1,4-Dioxane	See notes 1, 2, 3, 4, 6, 10 and 11.
Title 22 SOCs	Approved Drinking Water methods capable of meeting Title 22 DLRs.	If TICs are identified, confirm with other more selective and/or sensitive methods (e.g., EPA Methods 525.2, 8151, 8141, 508, 553, 555, etc.) may be required.

Notes:

1. The analyzing laboratory shall report results at Drinking Water levels if applicable, or at the laboratory's lowest achievable, reproducible and verifiable reporting limits, whichever are lower. Reporting limits shall be subject to the Department's review, approval and verification.

2. The laboratory performing the analyses shall be instructed to report all peaks (calibrated and uncalibrated) on chromatographic analyses. All uncalibrated peaks that can be identified by the mass spectra shall be identified as "Tentatively Identified Compounds" (TICs). All TICs must be reported to the Department along with the other compounds.

3. The Department may require an identification of all unknown peaks shown on GC-MS chromatograms which are not identified by the laboratory's existing library of spectra. This may involve an identification of functional groups or positive identification of the compound(s). Contact the Department for further instructions.

4. If samples need to be diluted for analysis, then the samples should be diluted at the lowest possible dilution for analysis to assure the analytes are reported at the lowest reporting limits.

5. While EPA Method 504.1 lists 1,2,3-TCP as an analyte, the method is not designed for the low level that the Department is seeking. Furthermore, ELAP does not certify laboratories for 1,2,3-TCP analysis. Method 504.1 is certified for EDB and DBCP only. The analyzing laboratory shall develop its own method for analyzing low-level 1,2,3-TCP. Laboratories are asked to develop and implement the lowest reporting limit possible or 2 ppt, whichever is less. Currently, a reporting limit of 50 ppt or lower is desired. The Department recommends using EPA method 524.2 with the mass spectrometer in the SIM mode.

6. Laboratory performing method 8270C shall take all necessary precautions to avoid cross contamination of samples. Laboratory shall implement procedures to avoid carry over of contaminants between samples. The laboratory should not batch drinking water samples from this study with soil, wastewater or other samples that may have high concentrations of analytes of interest. Additional quality control should be implemented to monitor contamination when an auto sampler is used.

7. Analysis for metals shall include all metals listed in Title 22 (i.e., Aluminum, Antimony, Arsenic, Barium, Beryllium, Cadmium, Chromium, Mercury, Nickel, Selenium, Thallium, Copper, Iron, Manganese, Silver and Zinc.) In addition, analysis shall include all metals which have action levels established by the Department or which have previously been detected in the study area (e.g., Lead, Boron, Lithium, Vanadium and Cobalt). For laboratories employing the ICP or ICP/MS technique, they shall include in their reports the results for any other metals that are included in the laboratory's calibration standards in addition to the targets analytes listed above.

8. There is no approved method or certification currently in place for the analysis of NDMA. Laboratories are advised to check the Department's web site for updated information on this analyte. Laboratories are to use the best available method or technology to achieve the lowest verifiable detection limit, if possible to less than 2 ppt.

9. Method 8330 from EPA SW-846 (Solid Waste Manual/Hazardous Waste testing) is employed for these analytes because there is no equivalent drinking water method available for these analytes.

10. Methods (8260B and 8270C) from EPA SW-846 (Solid Waste Manual/Hazardous Waste testing) are referenced because of their wider range of analytes (compounds) analyzed. To better characterize the contaminants, a more inclusive list of compounds is needed. See Note 1.

11. For the analysis of 1,4-Dioxane, analyzing laboratories are requested to modify EPA Method 8270C to include the analyte.

TABLE 3A-2
Comparison of Chemicals From Known and Potential Sources to Previously Analyzed Chemicals in JPL Monitoring Wells, Arroyo Well, and Well 52

COPCs	CAS#	Has Chemical Been Previously Analyzed in Groundwater from:			Recommended for Future Monitoring?	Recommended New Analyte	Comments
		JPL Monitoring Wells	Arroyo Well	Well 52			
1,2,3,4,6,7,8,9-octachlorodibenzo-p-dioxin (OCDD)	3268-87-9	No	No	No	√	√	Will be analyzed per EPA 8290 .
1,2-dichlorobenzene (o-dichlorobenzene)	95-50-1	Yes	Yes	Yes	√		
acetic acid	64-19-7	No - See Comment	No - See Comment	No - See Comment			Not of health concern, would be rapidly biologically degraded in the subsurface
ammonia isotopes N^{14} and N^{15}		No - See Comment	No - See Comment	No - See Comment			Not of health concern
ammonium	14798-03-9	No	No	No			Consumed by biological activity in the subsurface.
aniline	-	No	No	No			Listed as component of ballastite, but chemical cannot be found in literature.
arochlor-1242	53469-21-9	No	Yes	Yes	√		
arochlor-1254	11097-69-1	No	Yes	Yes	√		
arochlor-1260	11096-82-5	No	Yes	Yes	√		
arsenic trioxide	1327-53-3	Yes - See Comment	Yes - See Comment	Yes - See Comment	√		Will be detected by elevated dissolved arsenic.
ballastite (cellulose nitrate, nitroglycerin, aniline)	90004-70-0, 55-63-0	No - See Comment	No - See Comment	No - See Comment			This is a highly reactive and unstable chemical that would not be present after 20 years.
beryllium	7440-41-7	Yes	No	No	√		
butylbenzylphthalate	85-68-7	Yes	Yes	Yes	√		
calcium permanganate	10118-76-0	No - See Comment	No - See Comment	No - See Comment			Permanganate is a highly reactive oxidizing agent that would be rapidly consumed in the subsurface. Would be detected by elevated managanese.
chlorine trifluoride	7790-91-2	No - See Comment	No - See Comment	No - See Comment			Rocket propellant, highly reactive with water and organics. Would not be present in water.
chlorobenzene	108-90-7	Yes	Yes	Yes	√		
chlorodifluoromethane	75-45-6	No	No	No	√		Will be included as an additional analyte in EPA 524.2
chromic acid	1333-82-0	Yes - See Comment	Yes - See Comment	Yes - See Comment	√		Would be detected by elevated hexavalent chromium and low pH.
cis-1,2-dichloroethylene	156-59-2	Yes	Yes	Yes	√		
cobalt	7440-48-4	Yes	No	No	√		
cresols (3-methyl phenol)	108-39-4	No	No	No	√	√	This may be included as an additional analyte to EPA525 or 8270.
di-isopropyl ether (DIPE)	108-20-3	No	No	No	√	√	Gasoline oxygenate. This should be included as an additional analyte in EPA 524.2
ethylenediamine	107-15-3	No	No	No			Volatilization from atmosphere is likely from soil but not water. Adsorption to soil particulates is strong and leaching to groundwater is not expected; biodegradation is likely in soil but will also occur in water. Moderate toxicity in animals, not carcinogenic, exposure to public not evaluated. Used in epoxy, coating.
ethyl-t-butyl ether (ETBE)	637-92-3	No	No	No	√	√	Gasoline oxygenate
fluorene	86-73-7	Yes	Yes	Yes	√		
fluoride	16984-48-8	No	Yes	Yes	√		
fluorotrichloromethane (trichlorofluoromethane)	75-69-4	Yes	Yes	Yes	√		This should be included as an additional analyte in EPA 524.2
formaldehyde	50-00-0	No	No	No	√	√	

TABLE 3A-2
Comparison of Chemicals From Known and Potential Sources to Previously Analyzed Chemicals in JPL Monitoring Wells, Arroyo Well, and Well 52

COPCs	CAS#	Has Chemical Been Previously Analyzed in Groundwater from:			Recommended for Future Monitoring?	Recommended New Analyte	Comments
		JPL Monitoring Wells	Arroyo Well	Well 52			
nitric acid (fuming)	7697-37-2	Yes - See Comment	Yes - See Comment	Yes - See Comment	√		Highly reactive oxidizing acid is not stable in the subsurface. Would be detected by low pH and elevated nitrate.

TABLE 3A-2
Comparison of Chemicals From Known and Potential Sources to Previously Analyzed Chemicals in JPL Monitoring Wells, Arroyo Well, and Well 52

COPCs	CAS#	Has Chemical Been Previously Analyzed in Groundwater from:			Recommended for Future Monitoring?	Recommended New Analyte	Comments
		JPL Monitoring Wells	Arroyo Well	Well 52			
hydrazine	302-01-2	No - See Comment	No - See Comment	No - See Comment			H_4N_2. Highly reactive organic used as component of rocket engine propellant. Undergoes oxidation and biodegradation in soils and water. Hydrazines usually break down into less toxic compounds (nitrogen and water) within a few weeks in water (ATSDR, 1997).
Diesel range hydrocarbons (C_{10} through C_{22})		No	No	No	√	√	Will be covered by EPA 8015 Modified (Total petroleum hydrocarbons - diesel range)
Gas range hydrocarbons (C_4 through C_{12})		No	No	No	√	√	Will be covered by EPA 8015 Modified (Total petroleum hydrocarbons - gas range)
Oil range hydrocarbons (C_{18} or greater)		No	No	No	√	√	Will be covered by EPA 8015 Modified (Total petroleum hydrocarbons - oil range)
hydrochloric acid	7647-01-0	No - See Comment	No - See Comment	No - See Comment			Will be detected by elevated chloride and low pH.
hydroquinone	123-31-9	No - See Comment	No - See Comment	No - See Comment			Hydroquinone breaks down as a result of photochemical and biological processes and therefore does not persist in the environment.
iron oxide (not sure if Fe_2O_3 or F_3O_4)	1317-60-8 or 1309-38-2	No - See Comment	No - See Comment	No - See Comment			Not of health concern, naturally occurring in the subsurface.
methyl chloride (methane)	74-87-3	No	No	No			Volatile gas, not significantly soluble in water.
methyl ethyl ketone	78-93-3	No	No	No	√	√	This should be included as an additional analyte in EPA 524.2
monomethyl hydrazine (MMH)	60-34-4	No - See Comment	No - See Comment	No - See Comment			Used in rocket fuel. Ignites spontaneously in air when in contact with porous materials (e.g., earth, asbestos, wood, or cloth). Also ignites spontaneously on contact with strong oxidizing agents (e.g., fluorine, chlorine trifluoride, fuming nitric acid, and nitrogen tetroxide). Hydrazines usually break down into less toxic compounds within a few weeks in water (ATSDR). See comments for hydrazine.
nitrates	Various	No	Yes	Yes	√		
nitrofluoride (not found--searched for nitrogen fluoride and find tetrafluorohydrazine; nitrofluoride term was found in JPL records)	10036-47-2	No - See Comment	No - See Comment	No - See Comment			This compound (listed as nitrofluoride is the JPL records) is most likely tetrafluorohydrazine. Hydrazines usually break down into less toxic compounds within a few weeks in water (ATSDR).
nitrogen tetroxide	10544-72-6	No - See Comment	No - See Comment	No - See Comment			Hazardous volatile liquid under pressure. Tested as oxidizing agent for rocket propulsion. Composed of an equilibrium mixture of NO2 and N2O4. Does not burn, but supports the combustion of carbon, phosphorus, and sulfur. Unstable, decomposes in water to nitric acid and nitric oxide. If present, composition products would be detected as nitrate.
nitromethane	75-52-5	No - See Comment	No - See Comment	No - See Comment			Nitromethane typically has a a 24 hour half life in water, degrading by a reaction with hydroxyl radicals.
Polybutadiene	106-99-0	No - See Comment	No - See Comment	No - See Comment			Butadiene is a gas and is expected to evaporate to the air before dissolving into water; there is little information about the fate of butadiene in water in the environment

TABLE 3A-2
Comparison of Chemicals From Known and Potential Sources to Previously Analyzed Chemicals in JPL Monitoring Wells, Arroyo Well, and Well 52

COPCs	CAS#	Has Chemical Been Previously Analyzed in Groundwater from:			Recommended for Future Monitoring?	Recommended New Analyte	Comments
		JPL Monitoring Wells	Arroyo Well	Well 52			
Acrylic acid	79-10-7	No - See Comment	No - See Comment	No - See Comment			Acrylic acid is not commonly found in groundwater; typically they evaporate to the air and are degraded by bacteria in soil. For analysis method development may be needed however indicator analyses could be carried out with EPA 525 or 8270
polychlorinated biphenyls (PCBs)	Various	No	Yes	Yes	√		Will be covered under EPA 508.1
polyurethane (urethane)	51-79-6	No - See Comment	No - See Comment	No - See Comment			Commonly used wood finish, not expected to be groundwater contaminant. No common analytical method available.
propane	74-98-6	No - See Comment	No - See Comment	No - See Comment			Volatile gas, not significantly soluble in water.
steel (iron)	NA	Yes	Yes	Yes			Commonly used metal. Would be detected by soluble iron analysis.
sulfuric acid	7664-93-9	Yes - See Comment	Yes - See Comment	Yes - See Comment			Would be detected by elevated sulfate and low pH
t-amyl methyl ether (TAME)	994-05-8	No	No	No	√	√	Gasoline oxygenate
t-butyl alcohol (TBA)	75-65-0	No	No	No	√	√	Gasoline component. Should be included as analyte under EPA 524.2
total petroleum hydrocarbons (TPH)		No	No	No	√	√	Would be covered under EPA 8015 Modified
trichloroethane (1,1,2-trichloroethane)	79-00-5	Yes	Yes	Yes	√		
uns-di-methyl-hydrazine (UDMH)	57-14-7	No - See Comment	No - See Comment	No - See Comment			Hydrazines usually break down into less toxic compounds within a few weeks in water (ATSDR).

Table 3A-3

Request for Analyses for Comprehensive Groundwater Monitoring Event

ANALYSES REQUESTED [7]		TOTAL PETROLEUM HYDROCARBONS-DIESEL	TOTAL PETROLEUM HYDROCARBONS-GASOLINE	VOLATILES	1,4-DIOXANE	SEMIVOLATILES	DIOXIN AND FURAN (TETRA THROUGH OCTA CONGENERS)	FORMALDEHYDE	ETHYLENE GLYCOL	PESTICIDES/ PCBs	ORGANOPHOSPHORUS PESTICIDES	NITROGEN & PHOSPHOROUS PESTICIDES	PARAQUAT & DIQUAT	CARBAMATES (ALDICARBS)	CHLOROPHENOXY HERBICIDES
METHOD		EPA 8015-MODIFIED	EPA 8015-MODIFIED	EPA 524.2	EPA 8270 SIM	EPA 8270	EPA 8290	EPA 8315 A	EPA 8015 M	EPA 508	EPA 8141A	EPA 507	EPA 549.1	EPA 531.1	EPA 8151 A
LABORATORY		APCL	APCL	APCL	APCL	West Coast Anal.	Frontier Anal.	West Coast Anal.	APCL	APPL	APPL	APPL	APCL	APCL	APCL
CONTAINER TYPE		GLASS AMBER	VOA VIAL	VOA VIAL	GLASS AMBER	GLASS AMBER	GLASS AMBER	GLASS AMBER	GLASS AMBER	GLASS AMBER	GLASS AMBER	GLASS AMBER	GLASS AMBER	GLASS AMBER	GLASS AMBER
PRESERVATIVES		CHILL to 4 °C	ADD HCl to pH < 2 CHILL to 4 °C NO HEADSPACE	ADD HCl to pH < 2 CHILL to 4 °C NO HEADSPACE	CHILL to 4 °C	CHILL to 4 °C	CHILL to 4 °C	CHILL to 4 °C	CHILL to 4 °C	CHILL to 4 °C	CHILL to 4 °C	CHILL to 4 °C	CHILL to 4 °C	MONO-Cl-ACETIC CHILL to 4 °C	CHILL to 4 °C
ANALYTICAL HOLDING TIMES		< 7 DAYS	< 7 DAYS	< 14 DAYS	< 7/40 DAYS[2]	< 7/40 DAYS[2]	< 30 DAYS	<3/3 DAYS	< 14 DAYS	< 7/40 DAYS[2]	< 7/40 DAYS[2]	< 7/40 DAYS[2]	< 7/40 DAYS[2]	< 7/40 DAYS[2]	< 7/40 DAYS[2]
NO. BOTTLES PER ANALYSIS[1]		(2) - 1000 mL	(3) - 40 mL	(3) - 40 mL	(2) - 1000 mL	(2) - 1000 mL	(2) - 1000 mL	(2) - 1000 mL	(2) - 1000 mL	(2) - 1000 mL	(2) - 1000 mL	(2) - 1000 mL	(2) - 1000 mL	(2) - 1000 mL	(2) - 1000 mL
SAMPLE LOCATION	**SAMPLING SCHEDULE**														
Monitoring Wells															
MW-3-3	FALL QUARTER 2002	1	1	1	1	1	1	1	1	1	1	1	1	1	1
MW-3-5	FALL QUARTER 2002	0	0	1	1	1	0	0	0	1	0	0	0	0	0
MW-4-1	FALL QUARTER 2002	0	0	1	1	1	0	0	0	1	0	0	0	0	0
MW-4-2	FALL QUARTER 2002	1	1	1	1	1	0	1	1	1	1	1	1	1	1
MW-4-5	FALL QUARTER 2002	0	0	1	1	1	0	0	0	1	0	0	0	0	0
MW-7	FALL QUARTER 2002	1	1	1	1	1	1	1	1	1	1	1	1	1	1
MW-8	FALL QUARTER 2002	0	0	1	1	1	0	0	0	1	0	0	0	0	0
MW-10	FALL QUARTER 2002	1	1	1	1	1	0	0	0	1	0	0	0	0	0
MW-12-3	FALL QUARTER 2002	1	1	1	1	1	1	1	1	1	1	1	1	1	1
MW-12-5	FALL QUARTER 2002	0	0	1	1	1	0	0	0	1	0	0	0	0	0
MW-16	FALL QUARTER 2002	1	1	1	1	1	1	1	1	1	1	1	1	1	1
MW-14-2	FALL QUARTER 2002	1	1	1	1	1	0	1	1	1	1	1	1	1	1
MW-14-4	FALL QUARTER 2002	0	0	1	1	1	0	0	0	1	0	0	0	0	0
MW-17-3	FALL QUARTER 2002	0	0	1	1	1	0	0	0	1	0	0	0	0	0
MW-17-4	FALL QUARTER 2002	1	1	1	1	1	0	0	0	1	0	0	0	0	0
MW-18-3	FALL QUARTER 2002	0	0	1	1	1	0	0	0	1	0	0	0	0	0
MW-18-4	FALL QUARTER 2002	1	1	1	1	1	0	0	0	1	0	0	0	0	0
MW-19-3	FALL QUARTER 2002	1	1	1	1	1	0	0	0	1	0	0	0	0	0
MW-19-5	FALL QUARTER 2002	0	0	1	1	1	0	0	0	1	0	0	0	0	0
MW-21-3	FALL QUARTER 2002	0	0	1	1	1	0	0	0	1	0	0	0	0	0
MW-21-5	FALL QUARTER 2002	1	1	1	1	1	0	0	0	1	0	0	0	0	0
MW-24-2	FALL QUARTER 2002	1	1	1	1	1	0	0	0	1	0	0	0	0	0
TOTAL	FALL QUARTER 2002	**12**	**12**	**22**	**22**	**22**	**4**	**6**	**6**	**22**	**6**	**6**	**6**	**6**	**6**
Field Blanks															
Equipment Rinsate Blanks[3]	FALL QUARTER 2002	2	2	4	4	4	1	1	1	4	1	1	1	1	1
Trip Blanks[4]	FALL QUARTER 2002	0	0	22	0	0	0	0	0	0	0	0	0	0	0
Source Blanks[5]	FALL QUARTER 2002	1	1	4	2	2	1	1	1	2	1	1	1	1	1
Duplicates															
Duplicates	FALL QUARTER 2002	1	1	2	2	2	1	1	1	2	1	1	1	1	1
Matrix Spike/Matrix Spike Duplicate[6]	FALL QUARTER 2002	1	1	1	1	1	1	1	1	1	1	1	1	1	1
TOTAL		**18**	**18**	**56**	**32**	**32**	**9**	**11**	**11**	**32**	**11**	**11**	**11**	**11**	**11**

NOTES:

1 The number of sample bottles may be reduced as analyses may be combined, depending on the type of the equipment used by the laboratory.

2 The first number indicates holding time to extraction; the second number indicates the holding time to analysis.

3 Equipment Rinsate Blanks will be collected at a rate of one per three sampling locations; for the multiport wells, each port is a sampling location.

4 Trip Blanks will be included with every cooler containing samples for VOC analyses.

5 Source Water Blanks will be collected for each lot of water used for equipment blanks; the number of samples are estimated.

6 MS/MSD samples will be taken at the rate of one per 20 samples; each MS/MSD sample counts for two analyses.

7 Turbidity, field pH, temperature, and electrical conductivity will be measured in the field for all wells.

8 Samples will be collected from production wells during a future sampling event.

9 Holding time is 14 days under refrigeration and 6 months if frozen.

Table 3A-3
Request for Analyses for Comprehensive Groun

ANALYSES REQUESTED [7]		CHLOROPICRIN GROUP	GLYPHOSATE	ENDOTHALL	1,2,3-TCP	EDB & DBCP	EXPLOSIVES	NDMA, N-nitrosodi-n-propylamine N-nitrosodiphenylamine	DISSOLVED METALS	MERCURY	ANTIMONY SELENIUM THALLIUM	CHROMIUM (VI)	PERCHLORATE	CHLORATES	CYANIDE	BROMIDE CHLORIDE FLUORIDE SULFATE
METHOD		EPA 551.1	EPA 547	EPA 548	EPA 504.1 SIM	EPA 504.1	EPA 8330	MOE MSABN-E3291A	EPA 200.8	EPA 245.1	EPA 200.8	EPA 218.6	EPA 314	EPA 300 Modified	EPA 335.3	EPA 300.0
LABORATORY		Babcock	APCL	APCL	FGL	APCL	APCL	Maxxam	APPL	APPL	APPL	APCL	APCL	EMAX	APCL	APCL
CONTAINER TYPE		GLASS AMBER	GLASS AMBER	GLASS AMBER	GLASS AMBER	GLASS AMBER	GLASS AMBER	GLASS AMBER	POLYETHYLENE	POLYETHYLENE	POLYETHYLENE	POLYETHYLENE	POLYETHYLENE	POLYETHYLENE	POLYETHYLENE	POLYETHYLENE
PRESERVATIVES		CHILL to 4 °C	NaS_2O_3 for chlorinated water sources CHILL to 4 °C	NaS_2O_3 for chlorinated water sources CHILL to 4 °C	CHILL to 4 °C NO HEADSPACE	CHILL to 4 °C NO HEADSPACE	CHILL to 4 °C	CHILL to 4 °C	ADD HNO_3 to pH < 2 CHILL to 4 °C	ADD HNO_3 to pH < 2 CHILL to 4 °C	ADD HNO_3 to pH < 2 CHILL to 4 °C	CHILL to 4 °C	CHILL to 4 °C	DD EDA (pre-preserved bottle	CHILL to 4 °C	CHILL to 4 °C
ANALYTICAL HOLDING TIMES		< 7/40 DAYS[2]	<14 DAYS/6 MONTHS [9]	<7 DAYS/40 DAYS	< 14 DAYS	< 14 DAYS	< 7/40 DAYS[2]	< 7/40 DAYS[2]	< 6 MONTHS	28 DAYS	< 6 MONTHS	24 HOURS	< 28 DAYS	< 28 DAYS	14 DAYS	< 28 DAYS
NO. BOTTLES PER ANALYSIS[1]		(2) - 1000 mL	(1) 125-mlL	(1) - 1000 mL	(3) 40-mL	(2) - 1000 mL	(2) - 1000 mL	(2) - 1000 mL	(1) - 125 mL	(1) - 125 mL	(1) - 125 mL	(1) - 125 mL	(1) - 125 mL	(1) - 125 mL	(1) - 125 mL	(1) - 125 mL
SAMPLE LOCATION	**SAMPLING SCHEDULE**															
Monitoring Wells																
MW-3-3	FALL QUARTER 2002	1	1	1	1	1	1	1	1	1	1	1	1	1	1	1
MW-3-5	FALL QUARTER 2002	0	0	0	0	0	1	1	1	1	1	1	1	1	1	1
MW-4-1	FALL QUARTER 2002	0	0	0	0	0	1	1	1	1	1	1	1	1	1	1
MW-4-2	FALL QUARTER 2002	1	1	1	1	1	1	1	1	1	1	1	1	1	1	1
MW-4-5	FALL QUARTER 2002	0	0	0	0	0	1	1	1	1	1	1	1	1	1	1
MW-7	FALL QUARTER 2002	1	1	1	1	1	1	1	1	1	1	1	1	1	1	1
MW-8	FALL QUARTER 2002	0	0	0	0	0	1	1	1	1	1	1	1	1	1	1
MW-10	FALL QUARTER 2002	0	0	0	1	1	1	1	1	1	1	1	1	1	1	1
MW-12-3	FALL QUARTER 2002	1	1	1	1	1	1	1	1	1	1	1	1	1	1	1
MW-12-5	FALL QUARTER 2002	0	0	0	0	0	1	1	1	1	1	1	1	1	1	1
MW-16	FALL QUARTER 2002	1	1	1	1	1	1	1	1	1	1	1	1	1	1	1
MW-14-2	FALL QUARTER 2002	1	1	1	1	1	1	1	1	1	1	1	1	1	1	1
MW-14-4	FALL QUARTER 2002	0	0	0	0	0	1	1	1	1	1	1	1	1	1	1
MW-17-3	FALL QUARTER 2002	0	0	0	0	0	1	1	1	1	1	1	1	1	1	1
MW-17-4	FALL QUARTER 2002	0	0	0	1	1	1	1	1	1	1	1	1	1	1	1
MW-18-3	FALL QUARTER 2002	0	0	0	0	0	1	1	1	1	1	1	1	1	1	1
MW-18-4	FALL QUARTER 2002	0	0	0	1	1	1	1	1	1	1	1	1	1	1	1
MW-19-3	FALL QUARTER 2002	0	0	0	1	1	1	1	1	1	1	1	1	1	1	1
MW-19-5	FALL QUARTER 2002	0	0	0	0	0	1	1	1	1	1	1	1	1	1	1
MW-21-3	FALL QUARTER 2002	0	0	0	0	0	1	1	1	1	1	1	1	1	1	1
MW-21-5	FALL QUARTER 2002	0	0	0	1	1	1	1	1	1	1	1	1	1	1	1
MW-24-2	FALL QUARTER 2002	0	0	0	1	1	1	1	1	1	1	1	1	1	1	1
TOTAL	FALL QUARTER 2002	**6**	**6**	**6**	**12**	**12**	**22**	**22**	**22**	**22**	**22**	**22**	**22**	**22**	**22**	**22**
Field Blanks																
Equipment Rinsate Blanks[3]	FALL QUARTER 2002	1	1	1	2	2	4	4	4	4	4	4	4	4	4	4
Trip Blanks[4]	FALL QUARTER 2002	0	0	0	0	0	0	0	0	0	0	0	0	0	0	0
Source Blanks[5]	FALL QUARTER 2002	1	1	1	1	1	2	2	2	2	2	2	2	0	2	2
Duplicates																
Duplicates	FALL QUARTER 2002	1	1	1	1	1	2	2	2	2	2	2	2	2	1	2
Matrix Spike/Matrix Spike Duplicate[6]	FALL QUARTER 2002	1	1	1	1	1	1	1	1	1	1	1	1	1	1	1
TOTAL		**11**	**11**	**11**	**18**	**18**	**32**	**32**	**32**	**32**	**32**	**32**	**32**	**30**	**31**	**32**

NOTES:

1 The number of sample bottles may be reduced as analyses may be combined, depending on the type of the equipment used by the laboratory.

2 The first number indicates holding time to extraction; the second number indicates the holding time to analysis.

3 Equipment Rinsate Blanks will be collected at a rate of one per three sampling locations; for the multiport wells, each port is a sampling location.

4 Trip Blanks will be included with every cooler containing samples for VOC analyses.

5 Source Water Blanks will be collected for each lot of water used for equipment blanks; the number of samples are estimated.

6 MS/MSD samples will be taken at the rate of one per 20 samples; each MS/MSD sample counts for two analyses.

7 Turbidity, field pH, temperature, and electrical conductivity will be measured in the field for all wells.

8 Samples will be collected from production wells during a future sampling event.

9 Holding time is 14 days under refrigeration and 6 months if frozer

Table 3A-3
Request for Analyses for Comprehensive Groun

ANALYSES REQUESTED [7]		NITRATE (AS N) NITRITE (AS N)	GROSS ALPHA & BETA ACTIVITY	MBAS (DETERGENTS) (SURFACTANTS)	TOTAL DISSOLVED SOLIDS	TOTAL ORGANIC CARBON	HARDNESS (AS $CACO_3$)	LABORATORY pH	BIOLOGICAL OXYGEN DEMAND (BOD)	CHEMICAL OXYGEN DEMAND (COD)	COLOR	ALKALINITY	TOTAL SUSPENDED SOLIDS (TSS)	COLIFORM BACTERIA (FECAL)	TOTAL COLIFORMS	HETEROTROPHIC PLATE COUNT	ODOR
METHOD		EPA 300.0	EPA 900.0	EPA 425.1	EPA 160.1	EPA 415.1	EPA 130	EPA 9040B	EPA 405.1	EPA 410.4	EPA 110.2	EPA 310.1	EPA 160.2	SM 9221E	SM 9221B	SM 9215 B	EPA 140.1 or SM 2150B
LABORATORY		APCL	GEL	APCL	APCL	APCL	APCL	APCL	APCL	APCL	APCL	APCL					
CONTAINER TYPE		POLYETHYLENE	POLYETHYLENE	POLYETHYLENE	POLYETHYLENE	POLYETHYLENE	POLYETHYLENE	POLYETHYLENE	POLYETHYLENE	POLYETHYLENE	POLYETHYLENE	POLYETHYLENE	POLYETHYLENE	POLYETHYLENE	POLYETHYLENE	POLYETHYLENE	POLYETHYLENE
PRESERVATIVES		CHILL to 4 °C	ADD HNO_3 to pH < 2 CHILL to 4 °C NO HEADSPACE	CHILL to 4 °C	CHILL to 4 °C	ADD H_2SO_4 to pH < 2 CHILL to 4 °C NO HEADSPACE	CHILL to 4 °C	CHILL to 4 °C	CHILL to 4 °C	CHILL to 4 °C	CHILL to 4 °C	CHILL to 4 °C NO HEADSPACE	CHILL to 4 °C	ADD $Na_2S_2O_3$ CHILL to 4 °C	ADD $Na_2S_2O_3$ CHILL to 4 °C	ADD $Na_2S_2O_3$ CHILL to 4 °C	CHILL to 4 °C
ANALYTICAL HOLDING TIMES		< 48 HOURS	< 6 MONTHS	48 HOURS	< 7 DAYS	28 DAYS	< 6 MONTHS	IMMEDIATELY	28 DAYS	28 DAYS	< 48 HOURS	14 DAYS	< 7 DAYS	30 HOURS	30 HOURS	30 HOURS	24 HOURS
NO. BOTTLES PER ANALYSIS[1]		(1) - 125 mL	(1) - 125 mL	(1) - 125 mL	(1) - 125 mL	(1) - 125 mL	(1) - 125 mL	(1) - 125 mL	(1) - 125 mL	(1) - 125 mL	(1) - 125 mL	(1) - 125 mL	(1) - 125 mL	(1) - 125 mL	(1) - 125 mL	(1) - 125 mL	(1) - 125 mL
SAMPLE LOCATION	**SAMPLING SCHEDULE**																
Monitoring Wells																	
MW-3-3	FALL QUARTER 2002	1	1	1	1	1	1	1	1	1	1	1	(8)	(8)	(8)	(8)	(8)
MW-3-5	FALL QUARTER 2002	1	0	1	1	0	0	1	0	0	1	0	(8)	(8)	(8)	(8)	(8)
MW-4-1	FALL QUARTER 2002	1	0	1	1	0	0	1	0	0	1	0	(8)	(8)	(8)	(8)	(8)
MW-4-2	FALL QUARTER 2002	1	1	1	1	1	1	1	1	1	1	1	(8)	(8)	(8)	(8)	(8)
MW-4-5	FALL QUARTER 2002	1	0	1	1	0	0	1	0	0	1	0	(8)	(8)	(8)	(8)	(8)
MW-7	FALL QUARTER 2002	1	1	1	1	1	1	1	1	1	1	1	(8)	(8)	(8)	(8)	(8)
MW-8	FALL QUARTER 2002	1	1	1	1	1	1	1	1	1	1	1	(8)	(8)	(8)	(8)	(8)
MW-10	FALL QUARTER 2002	1	1	1	1	1	1	1	1	1	1	1	(8)	(8)	(8)	(8)	(8)
MW-12-3	FALL QUARTER 2002	1	1	1	1	1	1	1	1	1	1	1	(8)	(8)	(8)	(8)	(8)
MW-12-5	FALL QUARTER 2002	1	0	1	1	0	0	1	0	0	1	0	(8)	(8)	(8)	(8)	(8)
MW-16	FALL QUARTER 2002	1	1	1	1	1	1	1	1	1	1	1	(8)	(8)	(8)	(8)	(8)
MW-14-2	FALL QUARTER 2002	1	1	1	1	1	1	1	1	1	1	1	(8)	(8)	(8)	(8)	(8)
MW-14-4	FALL QUARTER 2002	1	0	1	1	0	0	1	0	0	1	0	(8)	(8)	(8)	(8)	(8)
MW-17-3	FALL QUARTER 2002	1	0	1	1	0	0	1	0	0	1	0	(8)	(8)	(8)	(8)	(8)
MW-17-4	FALL QUARTER 2002	1	1	1	1	1	1	1	1	1	1	1	(8)	(8)	(8)	(8)	(8)
MW-18-3	FALL QUARTER 2002	1	0	1	1	0	0	1	0	0	1	0	(8)	(8)	(8)	(8)	(8)
MW-18-4	FALL QUARTER 2002	1	1	1	1	1	1	1	1	1	1	1	(8)	(8)	(8)	(8)	(8)
MW-19-3	FALL QUARTER 2002	1	1	1	1	1	1	1	1	1	1	1	(8)	(8)	(8)	(8)	(8)
MW-19-5	FALL QUARTER 2002	1	0	1	1	0	0	1	0	0	1	0	(8)	(8)	(8)	(8)	(8)
MW-21-3	FALL QUARTER 2002	1	0	1	1	0	0	1	0	0	1	0	(8)	(8)	(8)	(8)	(8)
MW-21-5	FALL QUARTER 2002	1	1	1	1	1	1	1	1	1	1	1	(8)	(8)	(8)	(8)	(8)
MW-24-2	FALL QUARTER 2002	1	1	1	1	1	1	1	1	1	1	1	(8)	(8)	(8)	(8)	(8)
TOTAL	FALL QUARTER 2002	**22**	**13**	**22**	**22**	**13**	**13**	**22**	**13**	**13**	**22**	**13**	0	0	0	0	0
Field Blanks																	
Equipment Rinsate Blanks[3]	FALL QUARTER 2002	4	3	4	4	3	3	4	3	3	4	3	0	0	0	0	0
Trip Blanks[4]	FALL QUARTER 2002	0	0	0	0	0	0	0	0	0	0	0	0	0	0	0	0
Source Blanks[5]	FALL QUARTER 2002	2	1	2	2	2	1	2	1	1	1	1	0	0	0	0	
Duplicates																	
Duplicates	FALL QUARTER 2002	2	2	1	2	2	2	2	2	2	2	2	0	0	0	0	0
Matrix Spike/Matrix Spike Duplicate[6]	FALL QUARTER 2002	1	1	1	1	1	0	0	0	0	0	1	0	0	0	0	0
TOTAL		**32**	**21**	**31**	**32**	**22**	**19**	**30**	**19**	**19**	**29**	**21**	**0**	**0**	**0**	**0**	**0**

NOTES:

1 The number of sample bottles may be reduced as analyses may be combined, depending on the type of the equipment used by the laboratory.

2 The first number indicates holding time to extraction; the second number indicates the holding time to analysis.

3 Equipment Rinsate Blanks will be collected at a rate of one per three sampling locations; for the multiport wells, each port is a sampling location.

4 Trip Blanks will be included with every cooler containing samples for VOC analyses.

5 Source Water Blanks will be collected for each lot of water used for equipment blanks; the number of samples are estimated.

6 MS/MSD samples will be taken at the rate of one per 20 samples; each MS/MSD sample counts for two analyses.

7 Turbidity, field pH, temperature, and electrical conductivity will be measured in the field for all wells.

8 Samples will be collected from production wells during a future sampling event.

9 Holding time is 14 days under refrigeration and 6 months if frozer

TABLE 3A-4

Statistical Summary of Tentatively Identified Compounds (TICs) [1] for Jet Propulsion Laboratory Monitoring Wells [2]

(Sorted by Number of Detects)

		Concentration Data (ug/L)			
Analysis	Analyte	Number of Detects	Minimum Detected Value	Maximum Detected Value	Arithmetic Mean
TIC	ACETONE	69	1.10	10.00	3.58
TIC	ETHYLBENZENE	66	7.70	30.00	12.74
TIC	CARBON DISULFIDE	30	0.50	44.00	1.95
TIC	TETRAHYDROFURAN	15	7.80	1600.00	1013.32
TIC	2,4-BIS(1,1-DIMETHYLETHYL)-PHENOL	13	22.00	39.00	31.08
TIC	CYCLOHEXANONE	11	33.00	79.00	58.82
TIC	1,1,2-TRICHLOROTRIFLUOROETHANE	10	0.50	11.00	0.88
TIC	SUBSTITUTED ALKYL HEXANEDIOIC ACID ESTER	10	83.00	960.00	453.30
TIC	UNKNOWN,SCAN#190	9	1800.00	2800.00	2366.67
TIC	UNKNOWN ALKYL SUBSTITUTE PROPANOIC ACID	8	8.40	14.00	11.04
TIC	ISOPROPYLBENZENE	6	0.60	1.20	0.83
TIC	UNKNOWN SCAN#191	5	1800.00	3000.00	2340.00
TIC	UNKNOWN SCAN#188	5	1900.00	3200.00	2720.00
TIC	UNKNOWN SCAN#189	4	2300.00	3000.00	2750.00
TIC	2-METHYLPROPANE	3	1.20	1.60	1.43
TIC	DIMETHYL BENZENE	3	8.50	10.00	9.10
TIC	HEXANE	3	1.00	7.40	4.33
TIC	UNKNOWN (SCAN#92)	3	8.20	11.00	10.07
TIC	UNKNOWN ALCOHOL	3	14.00	17.00	15.33
TIC	ACETIC ACID	2	2.00	5.10	3.55
TIC	ISOBUTYLENE (2-METHYL-1-PROPENE)	2	1.50	3.10	2.30
TIC	UNKNOWN RT 5.12	2	1.90	2.10	2.00
TIC	UNKNOWN PHTHALATE	2	11.00	12.00	11.50
TIC	UNKNOWN SCAN#432	2	6.00	7.80	6.90
TIC	UNKNOWN SCAN#433	2	7.10	7.90	7.50
TIC	UNKNOWN(SCAN#1608)	2	8.20	21.00	14.60
TIC	UNKNOWN,SCAN#1239	2	8.30	10.00	9.15
TIC	1,1-DIFLUOROETHANE	1	4.30	4.30	4.30
TIC	1-METHYL-4-(1-METHYLETHENYL)	1	3.10	3.10	3.10
TIC	2-BUTANONE (MEK)	1	2.10	2.10	1.30
TIC	DICHLORODIFLUOROMETHANE	1	1.40	1.40	1.40
TIC	METHYL-T-BUTYL ETHER (MTBE)	1	0.70	0.70	0.70
TIC	N-BUTYL-BENZENESULFONAMIDE	1	8.90	8.90	8.90
TIC	SUBSTITUTED HEXANEDIOIC ACID ESTER	1	400.00	400.00	400.00
TIC	SULFUR DIOXIDE	1	2.70	2.70	2.70
TIC	UNKNOWN (RT= 21:27 TO 24:26)	1	10.00	10.00	10.00
TIC	UNKNOWN 5.26	1	1.20	1.20	1.20
TIC	UNKNOWN 5.27	1	0.60	0.60	0.60
TIC	UNKNOWN ALKENE SCAN #299	1	1.10	1.10	1.10
TIC	UNKNOWN C8 ACETATE ESTER	1	1.00	1.00	1.00
TIC	UNKNOWN HYDROCARBON	1	3.40	3.40	3.40
TIC	UNKNOWN POLYNUCLEAR AROMATIC HYDROCARBON	1	13.00	13.00	13.00
TIC	UNKNOWN RT=2.51	1	1.30	1.30	1.30
TIC	UNKNOWN RT=2:48	1	1.10	1.10	1.10
TIC	UNKNOWN RT=3.93	1	3.00	3.00	3.00
TIC	UNKNOWN RT=4.25	1	1.00	1.00	1.00
TIC	UNKNOWN RT=4.33	1	4.10	4.10	4.10
TIC	UNKNOWN RT=4.79	1	0.60	0.60	0.60
TIC	UNKNOWN RT=4.82	1	0.60	0.60	0.60
TIC	UNKNOWN RT=5.13	1	3.40	3.40	3.40
TIC	UNKNOWN RT=6.20	1	3.40	3.40	3.40
TIC	UNKNOWN RT=6.21	1	3.90	3.90	3.90
TIC	UNKNOWN RT=7.76	1	1.20	1.20	1.20
TIC	UNKNOWN SCAN#1047	1	1.60	1.60	1.60
TIC	UNKNOWN SCAN#1226	1	15.00	15.00	15.00
TIC	UNKNOWN SCAN#1237	1	8.50	8.50	8.50
TIC	UNKNOWN SCAN#1265	1	14.00	14.00	14.00
TIC	UNKNOWN SCAN#1266	1	9.90	9.90	9.90
TIC	UNKNOWN SCAN#1268	1	18.00	18.00	18.00
TIC	UNKNOWN SCAN#1268	1	48.00	48.00	48.00
TIC	UNKNOWN SCAN#1311	1	11.00	11.00	11.00
TIC	UNKNOWN SCAN#1390	1	12.00	12.00	12.00
TIC	UNKNOWN SCAN#1451	1	11.00	11.00	11.00
TIC	UNKNOWN SCAN#1596	1	2.20	2.20	2.20
TIC	UNKNOWN SCAN#185	1	2500.00	2500.00	2500.00
TIC	UNKNOWN SCAN#192	1	2700.00	2700.00	2700.00
TIC	UNKNOWN SCAN#193	1	3000.00	3000.00	3000.00
TIC	UNKNOWN SCAN#248	1	8.30	8.30	8.30

TABLE 3A-4

Statistical Summary of Tentatively Identified Compounds (TICs) [1] for Jet Propulsion Laboratory Monitoring Wells [2]

(Sorted by Number of Detects)

		Concentration Data			
Analysis	**Analyte**	**Number of Detects**	**Minimum Detected Value**	**Maximum Detected Value**	**Arithmetic Mean**
TIC	UNKNOWN SCAN#252	1	9.00	9.00	9.00
TIC	UNKNOWN SCAN#340	1	6.90	6.90	6.90
TIC	UNKNOWN SCAN#350	1	1.10	1.10	1.10
TIC	UNKNOWN SCAN#533	1	36.00	36.00	36.00
TIC	UNKNOWN SCAN#535	1	43.00	43.00	43.00
TIC	UNKNOWN SCAN#538	1	310.00	310.00	310.00
TIC	UNKNOWN SCAN#548	1	57.00	57.00	57.00
TIC	UNKNOWN SCAN#611	1	7.40	7.40	7.40
TIC	UNKNOWN SCAN#654	1	13.00	13.00	13.00
TIC	UNKNOWN SCAN#669	1	7.40	7.40	7.40
TIC	UNKNOWN SCAN#835	1	11.00	11.00	11.00
TIC	UNKNOWN SCAN#940	1	1.60	1.60	1.60
TIC	UNKNOWN SUBSTITUTED OXETANE SCAN#599	1	17.00	17.00	17.00
TIC	UNKNOWN SUBSTITUTED OXETANE SCAN#613	1	18.00	18.00	18.00
TIC	UNKNOWN SUBSTITUTED OXETANE SCAN#658	1	17.00	17.00	17.00
TIC	UNKNOWN SUBSTITUTED OXETANE SCAN#661	1	56.00	56.00	56.00
TIC	UNKNOWN SUBSTITUTED PROPANOIC ACID	1	12.00	12.00	12.00
TIC	UNKNOWN,SCAN#1240	1	8.60	8.60	8.60

the TICs and unknowns summarized are a compilation from sampling events dating back to 1992, and includes the comprehensive groundwater monitoring event conducted in December 2002/January 2003.

[1] Jet Propulsion Laboratory Monitoring Wells MW-19, MW-20, and MW-21 are not included since these wells are not located within the capture zones of the Arroyo Well and Well 52

[2] Tentatively Identified Compounds (TICs) are compounds that are unidentified peaks on the chromatograms for the gas chromatography/mass spectroscopy (GC/MS) analyses of volatile organic compounds or semivolatile organic compounds.

TABLE 3A-5
Summary of VOC Data for JPL Monitoring Wells

Station ID:								MW-3-3	MW-3-5	MW-4-1	MW-4-2	MW-4-5	MW-7	MW-8	MW-10	MW-12-3	MW-12-5	MW-14-2	MW-14-4
QAQC Type:								N	N	N	N	N	N	N	N	N	N	N	N
Date Collected:								02/24/03	02/27/03	12/27/02	01/02/03	01/02/03	01/16/03	01/17/03	01/17/03	01/06/03	01/07/03	12/17/02	12/18/02
Analyte Type	Method	Analyte	Units	CA Primary MCL	CA Secondary MCL	CA PHG	DHS Action Level												
VOCs	EPA 524.2	1,1,1,2-TETRACHLOROETHANE	µg/L	--	--	--	--	0.50 U	0.50 UJ	0.50 U	0.50 U	0.50 U	0.50 U	0.50 U	0.50 U	0.50 U	0.50 U	0.50 U	0.50 U
VOCs	EPA 524.2	1,1,1-TRICHLOROETHANE	µg/L	200	--	--	--	0.50 U	0.50 UJ	0.50 U	0.50 U	0.50 U	0.50 U	0.50 U	0.50 U	0.50 U	0.50 U	0.50 U	0.50 U
VOCs	EPA 524.2	1,1,2,2-TETRACHLOROETHANE	µg/L	1.0	--	--	--	0.50 U	0.50 UJ	0.50 U	0.50 U	0.50 U	0.50 U	0.50 U	0.50 U	0.50 U	0.50 U	0.50 U	0.50 U
VOCs	EPA 524.2	1,1,2-TRICHLOROETHANE	µg/L	5.0	--	--	--	0.50 U	0.50 UJ	0.50 U	0.50 U	0.50 U	0.50 U	0.50 U	0.50 U	0.50 U	0.50 U	0.50 U	0.50 U
VOCs	EPA 524.2	1,1,2-TRICHLOROTRIFLUOROETHANE	µg/L	1,200	--	4,000	--	0.50 U	0.50 UJ	0.50 U	0.50 U	0.50 U	5.9	2.1	0.50 U	0.50 U	0.50 U	0.50 U	0.50 U
VOCs	EPA 524.2	1,1-DICHLOROETHANE	µg/L	5.0	--	--	--	0.30 U	0.30 UJ	0.30 U	0.40	0.30 U	0.30 U	0.30 U	0.50	0.30 U	0.30 U	0.50	0.30 U
VOCs	EPA 524.2	1,1-DICHLOROETHENE	µg/L	6.0	--	10	--	0.50 U	0.50 UJ	0.50 U	0.50 U	0.50 U	**8.2**	0.50 U	0.50 U	0.50 U	0.50 U	0.50 U	0.50 U
VOCs	EPA 524.2	1,2,3-TRICHLOROBENZENE	µg/L	--	--	--	--	0.50 U	0.50 UJ	0.50 U	0.50 U	0.50 U	0.50 U	0.50 U	0.50 U	0.50 U	0.50 U	0.50 U	0.50 U
VOCs	EPA 524.2	1,2,4-TRICHLOROBENZENE	µg/L	5.0	--	5.0	--	0.50 U	0.50 UJ	0.50 U	0.50 U	0.50 U	0.50 U	0.50 U	0.50 U	0.50 U	0.50 U	0.50 U	0.50 U
VOCs	EPA 524.2	1,2,4-TRIMETHYLBENZENE	µg/L	--	--	--	330	0.50 U	0.50 UJ	0.50 U	0.50 U	0.50 U	0.50 U	0.50 U	0.50 U	0.50 U	0.50 U	0.50 U	0.50 U
VOCs	EPA 524.2	1,2-DIBROMOETHANE (ETHYLENE DIBROMIDE, EDB)	µg/L	0.050	--	--	--	**0.50 U**	**0.50 UJ**	**0.50 U**	**0.50 U**	**0.50 U**	**0.50 U**	**0.50 U**	**0.50 U**	**0.50 U**	**0.50 U**	**0.50 U**	**0.50 U**
VOCs	EPA 524.2	1,2-DICHLOROBENZENE (O-DICHLOROBENZENE)	µg/L	600	--	600	--	0.50 U	0.50 UJ	0.50 U	0.50 U	0.50 U	0.50 U	0.50 U	0.50 U	0.50 U	0.50 U	0.50 U	0.50 U
VOCs	EPA 524.2	1,2-DICHLOROETHANE	µg/L	0.5	--	0.40	--	0.50 U	0.50 UJ	0.50 U	0.50 U	0.50 U	0.50 U	0.50 U	0.50 U	0.50 U	0.50 U	0.50 U	0.50 U
VOCs	EPA 524.2	1,2-DICHLOROPROPANE	µg/L	5.0	--	0.50	--	0.50 U	0.50 UJ	0.50 U	0.50 U	0.50 U	0.50 U	0.50 U	0.50 U	0.50 U	0.50 U	0.50 U	0.50 U
VOCs	EPA 524.2	1,3,5-TRIMETHYLBENZENE	µg/L	--	--	--	330	0.50 U	0.50 UJ	0.50 U	0.50 U	0.50 U	0.50 U	0.50 U	0.50 U	0.50 U	0.50 U	0.50 U	0.50 U
VOCs	EPA 524.2	1,3-DICHLOROPROPANE	µg/L	--	--	--	--	0.50 U	0.50 UJ	0.50 U	0.50 U	0.50 U	0.50 U	0.50 U	0.50 U	0.50 U	0.50 U	0.50 U	0.50 U
VOCs	EPA 524.2	1,4-DICHLOROBENZENE (PARA-DICHLOROBENZENE)	µg/L	5.0	--	6.0	--	0.50 U	0.50 UJ	0.50 U	0.50 U	0.50 U	0.50 U	0.50 U	0.50 U	0.50 U	0.50 U	0.50 U	0.50 U
VOCs	EPA 524.2	2,2-DICHLOROPROPANE	µg/L	--	--	--	--	0.50 U	0.50 UJ	0.50 U	0.50 U	0.50 U	0.50 U	0.50 U	0.50 U	0.50 U	0.50 U	0.50 U	0.50 U
VOCs	EPA 524.2	2-BUTANONE (METHYL ETHYL KETONE, MEK)	µg/L	--	--	--	--	5.0 U	5.0 UJ	5.0 U	5.0 U	5.0 U	5.0 U	5.0 U	5.0 U	5.0 U	5.0 U	5.0 U	5.0 U
VOCs	EPA 524.2	2-CHLOROETHYLVINYLETHER	µg/L	--	--	--	--	5.0 UJ	5.0 UJ	5.0 U	5.0 U	5.0 U	5.0 U	5.0 U	5.0 U	5.0 U	5.0 U	5.0 U	5.0 U
VOCs	EPA 524.2	2-CHLOROTOLUENE	µg/L	--	--	--	140	0.50 U	0.50 UJ	0.50 U	0.50 U	0.50 U	0.50 U	0.50 U	0.50 U	0.50 U	0.50 U	0.50 U	0.50 U
VOCs	EPA 524.2	2-HEXANONE	µg/L	--	--	--	--	2.0 U	2.0 UJ	2.0 U	2.0 U	2.0 U	2.0 U	2.0 U	2.0 U	2.0 U	2.0 U	2.0 U	2.0 U
VOCs	EPA 524.2	4-CHLOROTOLUENE	µg/L	--	--	--	140	0.50 U	0.50 UJ	0.50 U	0.50 U	0.50 U	0.50 U	0.50 U	0.50 U	0.50 U	0.50 U	0.50 U	0.50 U
VOCs	EPA 524.2	4-METHYL-2-PENTANONE (MIBK)	µg/L	--	--	--	120	5.0 U	5.0 UJ	5.0 U	5.0 U	5.0 U	5.0 U	5.0 U	5.0 U	5.0 U	5.0 U	5.0 U	5.0 U
VOCs	EPA 524.2	ACETONE	µg/L	--	--	--	--	8.4 U	8.4 UJ	5.0 U	5.0 U	5.0 U	5.0 UJ	5.0 UJ	5.0 UJ	5.0 U	5.0 U	5.0 U	5.0 U
VOCs	EPA 524.2	ACROLEIN	µg/L	--	--	--	--	50 U	50 UJ	50 U	50 U	50 U	50 UJ	50 UJ	50 UJ	50 U	50 U	50 UJ	50 UJ
VOCs	EPA 524.2	ACRYLONITRILE	µg/L	--	--	--	--	10 U	10 UJ	10 U	10 U	10 U	10 U	10 U	10 U	10 U	10 U	10 U	10 U
VOCs	EPA 524.2	BENZENE	µg/L	1.0	--	0.15	--	0.50 U	0.50 UJ	0.50 U	0.50 U	0.50 U	0.50 U	0.50 U	0.50 U	0.50 U	0.50 U	0.50 U	0.50 U
VOCs	EPA 524.2	BROMOBENZENE	µg/L	--	--	--	--	0.50 U	0.50 UJ	0.50 U	0.50 U	0.50 U	0.50 U	0.50 U	0.50 U	0.50 U	0.50 U	0.50 U	0.50 U
VOCs	EPA 524.2	BROMOCHLOROMETHANE	µg/L	--	--	--	--	1.0 U	1.0 UJ	1.0 U	1.0 U	18	1.0 U	1.0 U	1.0 U	1.0 U	1.0 U	1.0 U	1.0 U
VOCs	EPA 524.2	BROMODICHLOROMETHANE	µg/L	--	--	--	--	0.50 U	0.50 UJ	0.50 U	0.50 U	0.50 U	0.50 U	0.50 U	0.50 U	0.50 U	0.50 U	0.50 U	0.50 U
VOCs	EPA 524.2	BROMOFORM	µg/L	--	--	--	--	0.50 U	0.50 UJ	0.50 U	0.50 U	0.50 U	0.50 U	0.50 U	0.50 U	0.50 U	0.50 U	0.50 U	0.50 U
VOCs	EPA 524.2	BROMOMETHANE (METHYL BROMIDE)	µg/L	--	--	--	--	0.50 U	0.50 UJ	0.50 U	0.50 U	0.50 U	0.50 U	0.50 U	0.50 U	0.50 U	0.50 U	0.50 U	0.50 U
VOCs	EPA 524.2	CARBON DISULFIDE	µg/L	--	--	--	160	2.0 UJ	2.0 UJ	2.0 U	2.0 U	2.0 U	2.0 U	2.0 U	2.0 U	2.0 U	2.0 U	2.0 U	2.0 U
VOCs	EPA 524.2	CARBON TETRACHLORIDE	µg/L	0.50	--	0.10	--	0.20 U	0.20 UJ	0.20 U	0.20 U	0.20 U	**157**	**13**	0.20 U	**9.2**	0.20 U	0.20 U	0.20 U
VOCs	EPA 524.2	CHLOROBENZENE	µg/L	70	--	--	--	0.50 U	0.50 UJ	0.50 U	0.50 U	0.50 U	0.50 U	0.50 U	0.50 U	0.50 U	0.50 U	0.50 U	0.50 U
VOCs	EPA 524.2	CHLORODIBROMOMETHANE (THM)	µg/L	--	--	--	--	0.50 U	0.50 UJ	0.50 U	0.50 U	0.50 U	0.50 U	0.50 U	0.50 U	0.50 U	0.50 U	0.50 U	0.50 U
VOCs	EPA 524.2	CHLOROETHANE	µg/L	--	--	--	--	1.0 U	1.0 UJ	1.0 U	1.0 U	1.0 U	1.0 U	1.0 U	1.0 U	1.0 U	1.0 U	1.0 U	1.0 U
VOCs	EPA 524.2	CHLOROFORM	µg/L	100	--	--	--	0.71	0.30 UJ	1.2	0.40	0.30 U	17	2.9	0.63	1.7	0.30 U	0.62	0.30 U
VOCs	EPA 524.2	CHLOROMETHANE (METHYL CHLORIDE)	µg/L	--	--	--	--	0.50 U	0.50 UJ	0.50 U	0.50 U	0.50 U	0.50 U	0.50 U	0.50 U	0.50 U	0.50 U	0.50 U	0.50 U
VOCs	EPA 524.2	CIS-1,2-DICHLOROETHENE	µg/L	6.0	--	--	--	0.50 U	0.50 UJ	0.50 U	0.50 U	0.50 U	0.50 U	0.50 U	0.50 U	0.50 U	0.50 U	0.50 U	0.50 U
VOCs	EPA 524.2	CIS-1,3-DICHLOROPROPENE	µg/L	--	--	--	--	0.50 U	0.50 UJ	0.50 U	0.50 U	0.50 U	0.50 U	0.50 U	0.50 U	0.50 U	0.50 U	0.50 U	0.50 U
VOCs	EPA 524.2	DI-ISOPROPYL ETHER	µg/L	--	--	--	--	0.52 U	0.52 UJ	0.50 U	0.50 U	0.50 U	0.50 U	0.50 U	0.50 U	0.50 U	0.50 U	0.50 U	0.50 U
VOCs	EPA 524.2	DIBROMOMETHANE	µg/L	--	--	--	--	0.50 U	0.50 UJ	0.50 U	0.50 U	0.50 U	0.50 U	0.50 U	0.50 U	0.50 U	0.50 U	0.50 U	0.50 U
VOCs	EPA 524.2	DICHLORODIFLUOROMETHANE (FREON 112)	µg/L	--	--	--	1,000	0.50 U	0.50 UJ	0.50 U	0.50 U	0.50 U	0.50 U	0.50 U	0.50 U	0.50 U	0.50 U	0.50 U	0.50 U
VOCs	EPA 524.2	ETHYL-TERT-BUTYL ETHER (ETBE)	µg/L	--	--	--	--	3.0 U	3.0 UJ	3.0 U	3.0 U	3.0 U	3.0 U	3.0 U	3.0 U	3.0 U	3.0 U	3.0 U	3.0 U
VOCs	EPA 524.2	ETHYLBENZENE	µg/L	300	--	300	--	0.50 U	1.1 J	0.50 U	0.50 U	0.50 U	0.50 U	0.50 U	0.50 U	0.50 U	0.50 U	0.50 U	0.50 U
VOCs	EPA 524.2	HEXACHLOROBUTADIENE	µg/L	--	--	--	--	0.50 U	0.50 UJ	0.50 U	0.50 U	0.50 U	0.50 U	0.50 U	0.50 U	0.50 U	0.50 U	0.50 U	0.50 U
VOCs	EPA 524.2	ISOPROPYLBENZENE (CUMENE)	µg/L	--	--	--	770	0.50 U	0.50 UJ	0.50 U	0.50 U	0.50 U	0.50 U	0.50 U	0.50 U	0.50 U	0.50 U	0.50 U	0.50 U
VOCs	EPA 524.2	M-XYLENE	µg/L	--	--	--	--	0.50 U	0.50 UJ	0.50 U	0.50 U	0.50 U	0.50 U	0.50 U	0.50 U	0.50 U	0.50 U	0.50 U	0.50 U
VOCs	EPA 524.2	METHYL ACETATE	µg/L	--	--	--	--	10 U	10 UJ	10 U	10 U	10 U	10 U	10 U	10 U	10 U	10 U	10 UJ	10 UJ
VOCs	EPA 524.2	METHYL-T-BUTYL ETHER (MTBE)	µg/L	13	5.0	13	--	0.50 U	0.50 UJ	0.50 U	0.50 U	0.50 U	0.50 U	0.50 U	0.50 U	0.50 U	0.50 U	0.50 U	0.50 U
VOCs	EPA 524.2	METHYLENE CHLORIDE (DICHLOROMETHANE)	µg/L	5.0	--	4.0	--	1.8 U	**7,350**	0.90 U	**5.8 J**	**11,300 J**	0.50 UJ	0.50 UJ	0.50 UJ	0.40 J	0.50 UJ	1.9 UB	**6.2 UB**
VOCs	EPA 524.2	N-BUTYLBENZENE	µg/L	--	--	--	260	0.50 U	0.50 UJ	0.50 U	0.50 U	0.50 U	0.50 U	0.50 U	0.50 U	0.50 U	0.50 U	0.50 U	0.50 U
VOCs	EPA 524.2	N-PROPYLBENZENE	µg/L	--	--	--	260	0.50 U	0.50 UJ	0.50 U	0.50 U	0.50 U	0.50 U	0.50 U	0.50 U	0.50 U	0.50 U	0.50 U	0.50 U

TABLE 3A-5
Summary of VOC Data for JPL Monitoring Wells

Station ID:							MW-3-3	MW-3-5	MW-4-1	MW-4-2	MW-4-5	MW-7	MW-8	MW-10	MW-12-3	MW-12-5	MW-14-2	MW-14-4
QAQC Type:							N	N	N	N	N	N	N	N	N	N	N	N
Date Collected:							02/24/03	02/27/03	12/27/02	01/02/03	01/02/03	01/16/03	01/17/03	01/17/03	01/06/03	01/07/03	12/17/02	12/18/02
Analyte Type	**Method**	**Analyte**	**Units**	**CA Primary MCL**	**CA Secondary MCL**	**CA PHG**	**DHS Action Level**											
VOCs	EPA 524.2	NAPHTHALENE	µg/L	--	--	--	170	0.50 U	0.50 UJ	0.50 U	0.50 U	0.50 U	0.50 UJ	0.50 UJ	0.50 U	0.50 U	0.50 U	0.50 U
VOCs	EPA 524.2	O-XYLENE	µg/L	1,750	--	--	--	0.20 U	0.20 UJ	0.20 U	0.20 U	0.20 U	0.20 U	0.20 U	0.20 U	0.20 U	0.20 U	0.20 U
VOCs	EPA 524.2	P-ISOPROPYLTOLUENE	µg/L	--	--	--	--	0.50 U	0.50 UJ	0.50 U	0.50 U	0.50 U	0.50 U	0.50 U	0.50 U	0.50 U	0.50 U	0.50 U
VOCs	EPA 524.2	SEC-BUTYLBENZENE	µg/L	--	--	--	260	0.50 U	0.50 UJ	0.50 U	0.50 U	0.50 U	0.50 U	0.50 U	0.50 U	0.50 U	0.50 U	0.50 U
VOCs	EPA 524.2	STYRENE	µg/L	100	--	--	--	0.50 U	0.50 J	0.50 U	0.50 U	0.50 U	0.50 U	0.50 U	0.50 U	0.50 U	0.50 U	0.50 U
VOCs	EPA 524.2	TERT-AMYL-METHYL ETHER (TAME)	µg/L	--	--	--	--	3.0 U	3.0 UJ	3.0 U	3.0 U	3.0 U	3.0 U	3.0 U	3.0 U	3.0 U	3.0 U	3.0 U
VOCs	EPA 524.2	TERT-BUTYLBENZENE	µg/L	--	--	--	260	0.50 U	0.50 UJ	0.50 U	0.50 U	0.50 U	0.50 U	0.50 U	0.50 U	0.50 U	0.50 U	0.50 U
VOCs	EPA 524.2	TERTIARY BUTYL ALCOHOL (TBA)	µg/L	--	--	--	12	11 U	11 UJ	2.0 U	3.6 U	3.6 U	3.6 U	3.6 U	3.6 U	3.6 U	3.6 U	3.6 U
VOCs	EPA 524.2	TETRACHLOROETHENE (PCE)	µg/L	5.0	--	0.060	--	0.50 U	0.50 UJ	0.50 U	0.60	0.50 U	**20**	0.50 U	1.5	0.50 U	0.50 U	1.0	0.50 U
VOCs	EPA 524.2	TETRAHYDROFURAN	µg/L	--	--	--	--	2.7 U	2.7 UJ	0.50 U	2.2 U	2.2 U	2.2 U	2.2 U	2.2 U	2.2 U	2.2 U	2.2 U
VOCs	EPA 524.2	TOLUENE	µg/L	150	--	150	--	0.50 U	0.50 UJ	0.50 U	0.50 U	0.50 U	0.50 U	0.50 U	0.50 U	0.50 U	0.50 U	0.50 U
VOCs	EPA 524.2	TRANS-1,2-DICHLOROETHENE	µg/L	10	--	--	--	0.50 U	0.50 UJ	0.50 U	0.50 U	0.50 U	0.50 U	0.50 U	0.50 U	0.50 U	0.50 U	0.50 U
VOCs	EPA 524.2	TRANS-1,3-DICHLOROPROPENE	µg/L	--	--	--	--	0.50 U	0.50 UJ	0.50 U	0.50 U	0.50 U	0.50 U	0.50 U	0.50 U	0.50 U	0.50 U	0.50 U
VOCs	EPA 524.2	TRICHLOROETHENE (TCE)	µg/L	5.0	--	0.80	--	0.50 U	0.50 UJ	1.2	1.2	0.50 U	**6.3**	**7.8**	2.8	0.50	0.50 U	**7.6**	0.50 U
VOCs	EPA 524.2	TRICHLOROFLUOROMETHANE	µg/L	150	--	700	--	0.50 U	0.50 UJ	0.50 U	0.50 U	0.50 U	0.50 U	0.40 J	0.50 U	0.50 U	0.50 U	0.50 U	0.50 U
VOCs	EPA 524.2	VINYL ACETATE	µg/L	--	--	--	--	2.0 UJ	2.0 UJ	2.0 UJ	2.0 UJ	2.0 UJ	2.0 UJ	2.0 UJ	2.0 UJ	2.0 UJ	2.0 UJ	2.0 UJ	2.0 UJ
VOCs	EPA 524.2	VINYL CHLORIDE (CHLOROETHANE)	µg/L	0.50	--	0.050	--	0.50 U	0.50 UJ	0.50 U	0.50 U	0.50 U	0.50 U	0.50 U	0.50 U	0.50 U	0.50 U	0.50 U	0.50 U
VOCs	EPA 524.2	XYLENES (TOTAL)	µg/L	1,750	--	1,800	--	--	0.50 UJ	0.50 U	0.50 U	0.50 U	0.50 U	0.50 U	0.50 U	0.50 U	--	0.50 U	0.50 U

Notes:

N = Normal Environmental Sample
DUP = Field Duplicate Sample
"--" = Sample was not analyzed using this method.
B = Analyte is present in method blank
J = Estimated value
U = Not detected at the listed reporting limit.
UB = Not detected at the listed reporting limit; however, analyte is also present in the method blank.
UJ = The compound or analyte was analyzed for but not detected. The sample detection limit is an estimated value.
µg/L = micrograms per liter
XX = Bolding of value and qualifier means that the detection limit exceeds a CA Primary/Secondary MCL or DHS Action Level.
[ ] = Bolding and outlining of value and qualifier means that a detected value exceeds a CA Primary/Secondary MCL or DHS Action Level.

TABLE 3A-5
Summary of VOC Data for JPL Monitoring Wells

Station ID:								MW-16	MW-16	MW-17-3	MW-17-4	MW-17-4	MW-18-3	MW-18-4	MW-19-3	MW-19-5	MW-21-3	MW-21-5	MW-24-2
QAQC Type:								N	DUP	N	N	DUP	N	N	N	N	N	N	N
Date Collected:								01/16/03	01/16/03	12/12/02	12/16/02	12/16/02	12/10/02	12/11/02	12/06/02	12/09/02	12/04/02	12/05/02	01/09/03
Analyte Type	**Method**	**Analyte**	**Units**	**CA Primary MCL**	**CA Secondary MCL**	**CA PHG**	**DHS Action Level**												
VOCs	EPA 524.2	1,1,1,2-TETRACHLOROETHANE	µg/L	--	--	--	--	0.50 U	0.50 U	0.50 U	0.50 U	0.50 U	0.50 U	0.50 U	0.50 U	0.50 U	0.50 U	0.50 U	0.50 U
VOCs	EPA 524.2	1,1,1-TRICHLOROETHANE	µg/L	200	--	--	--	0.50 U	0.50 U	0.50 U	0.50 U	0.50 U	0.50 U	0.50 U	0.50 U	0.50 U	0.50 U	0.50 U	0.50 U
VOCs	EPA 524.2	1,1,2,2-TETRACHLOROETHANE	µg/L	1.0	--	--	--	0.50 U	0.50 U	0.50 U	0.50 U	0.50 U	0.50 U	0.50 U	0.50 U	0.50 U	0.50 U	0.50 U	0.50 U
VOCs	EPA 524.2	1,1,2-TRICHLOROETHANE	µg/L	5.0	--	--	--	0.50 U	0.50 U	0.50 U	0.50 U	0.50 U	0.50 U	0.50 U	0.50 U	0.50 U	0.50 U	0.50 U	0.50 U
VOCs	EPA 524.2	1,1,2-TRICHLOROTRIFLUOROETHANE	µg/L	1,200	--	4,000	--	0.50 U	0.50 U	0.50 U	0.50 U	0.50 U	0.50 U	0.50 U	0.50 U	0.50 U	0.50 U	0.50 U	0.50 U
VOCs	EPA 524.2	1,1-DICHLOROETHANE	µg/L	5.0	--	--	--	0.30 U	0.30 U	0.30 U	0.30 U	0.30 U	0.30 U	0.30 U	0.30 U	0.30 U	0.30 U	0.30 U	0.30
VOCs	EPA 524.2	1,1-DICHLOROETHENE	µg/L	6.0	--	10	--	0.50 U	0.50 U	0.30 J	0.50 U	0.50 U	0.50 U	0.50 U	0.50 U	0.50 U	0.50 U	0.50 U	0.50 U
VOCs	EPA 524.2	1,2,3-TRICHLOROBENZENE	µg/L	--	--	--	--	0.50 U	0.50 U	0.50 U	0.50 U	0.50 U	0.50 U	0.50 U	0.50 U	0.50 U	0.50 U	0.50 U	0.50 U
VOCs	EPA 524.2	1,2,4-TRICHLOROBENZENE	µg/L	5.0	--	5.0	--	0.50 U	0.50 U	0.50 U	0.50 UJ	0.50 UJ	0.50 U	0.50 UJ	0.50 UJ	0.50 U	0.50 U	0.50 UJ	0.50 U
VOCs	EPA 524.2	1,2,4-TRIMETHYLBENZENE	µg/L	--	--	--	330	0.50 U	0.50 U	0.50 U	0.50 U	0.50 U	0.50 U	0.50 U	0.50 U	0.50 U	0.50 U	0.50 U	0.50 U
VOCs	EPA 524.2	1,2-DIBROMOETHANE (ETHYLENE DIBROMIDE, EDB)	µg/L	0.050	--	--	--	**0.50 U**	**0.50 U**	**0.50 U**	**0.50 U**	**0.50 U**	**0.50 U**	**0.50 U**	**0.50 U**	**0.50 U**	**0.50 U**	**0.50 U**	**0.50 U**
VOCs	EPA 524.2	1,2-DICHLOROBENZENE (O-DICHLOROBENZENE)	µg/L	600	--	600	--	0.50 U	0.50 U	0.50 U	0.50 U	0.50 U	0.50 U	0.50 U	0.50 U	0.50 U	0.50 U	0.50 U	0.50 U
VOCs	EPA 524.2	1,2-DICHLOROETHANE	µg/L	0.5	--	0.40	--	0.50 U	0.50 U	0.50 U	0.50 U	0.50 U	0.50 U	0.50 U	0.50 U	0.50 U	0.50 U	0.50 U	0.50 U
VOCs	EPA 524.2	1,2-DICHLOROPROPANE	µg/L	5.0	--	0.50	--	0.50 U	0.50 U	0.50 U	0.50 U	0.50 U	0.50 U	0.50 U	0.50 U	0.50 U	0.50 U	0.50 U	0.50 U
VOCs	EPA 524.2	1,3,5-TRIMETHYLBENZENE	µg/L	--	--	--	330	0.50 U	0.50 U	0.50 U	0.50 U	0.50 U	0.50 U	0.50 U	0.50 U	0.50 U	0.50 U	0.50 U	0.50 U
VOCs	EPA 524.2	1,3-DICHLOROPROPANE	µg/L	--	--	--	--	0.50 U	0.50 U	0.50 U	0.50 U	0.50 U	0.50 U	0.50 U	0.50 U	0.50 U	0.50 U	0.50 U	0.50 U
VOCs	EPA 524.2	1,4-DICHLOROBENZENE (PARA-DICHLOROBENZENE)	µg/L	5.0	--	6.0	--	0.50 U	0.50 U	0.50 U	0.50 U	0.50 U	0.50 U	0.50 U	0.50 U	0.50 U	0.50 U	0.50 U	0.50 U
VOCs	EPA 524.2	2,2-DICHLOROPROPANE	µg/L	--	--	--	--	0.50 U	0.50 U	0.50 U	0.50 U	0.50 U	0.50 U	0.50 U	0.50 U	0.50 U	0.50 U	0.50 U	0.50 U
VOCs	EPA 524.2	2-BUTANONE (METHYL ETHYL KETONE, MEK)	µg/L	--	--	--	--	5.0 U	5.0 U	5.0 U	5.0 U	5.0 U	5.0 U	5.0 U	5.0 U	5.0 U	5.0 U	5.0 U	5.0 U
VOCs	EPA 524.2	2-CHLOROETHYLVINYLETHER	µg/L	--	--	--	--	5.0 U	5.0 U	5.0 U	5.0 U	5.0 U	5.0 U	5.0 U	5.0 U	5.0 U	5.0 U	5.0 U	5.0 U
VOCs	EPA 524.2	2-CHLOROTOLUENE	µg/L	--	--	--	140	0.50 U	0.50 U	0.50 U	0.50 U	0.50 U	0.50 U	0.50 U	0.50 U	0.50 U	0.50 U	0.50 U	0.50 U
VOCs	EPA 524.2	2-HEXANONE	µg/L	--	--	--	--	2.0 U	2.0 U	2.0 U	2.0 U	2.0 U	2.0 UJ	2.0 UJ	2.0 UJ	2.0 UJ	2.0 UJ	2.0 UJ	2.0 U
VOCs	EPA 524.2	4-CHLOROTOLUENE	µg/L	--	--	--	140	0.50 U	0.50 U	0.50 U	0.50 U	0.50 U	0.50 U	0.50 U	0.50 U	0.50 U	0.50 U	0.50 U	0.50 U
VOCs	EPA 524.2	4-METHYL-2-PENTANONE (MIBK)	µg/L	--	--	--	120	5.0 U	5.0 U	5.0 U	5.0 U	5.0 U	5.0 UJ	5.0 UJ	5.0 UJ	5.0 UJ	5.0 UJ	5.0 UJ	5.0 U
VOCs	EPA 524.2	ACETONE	µg/L	--	--	--	--	5.0 UJ	5.0 UJ	5.0 U	5.0 U	5.0 U	5.0 U	5.0 U	5.0 U	5.0 U	5.0 U	5.0 U	5.0 U
VOCs	EPA 524.2	ACROLEIN	µg/L	--	--	--	--	50 UJ	50 UJ	50 UJ	50 UJ	50 UJ	50 U	50 UJ	50 UJ	50 UJ	50 U	50 UJ	50 U
VOCs	EPA 524.2	ACRYLONITRILE	µg/L	--	--	--	--	10 U	10 U	10 U	10 U	10 U	10 U	10 U	10 U	10 U	10 U	10 U	10 U
VOCs	EPA 524.2	BENZENE	µg/L	1.0	--	0.15	--	0.50 U	0.50 U	0.50 U	0.50 U	0.50 U	0.50 U	0.50 U	0.50 U	0.50 U	0.50 U	0.50 U	0.50 U
VOCs	EPA 524.2	BROMOBENZENE	µg/L	--	--	--	--	0.50 U	0.50 U	0.50 U	0.50 U	0.50 U	0.50 U	0.50 U	0.50 U	0.50 U	0.50 U	0.50 U	0.50 U
VOCs	EPA 524.2	BROMOCHLOROMETHANE	µg/L	--	--	--	--	1.0 U	1.0 U	1.0 U	1.0 U	1.0 U	1.0 U	1.0 U	1.0 U	1.0 U	1.0 U	1.0 U	1.0 U
VOCs	EPA 524.2	BROMODICHLOROMETHANE	µg/L	--	--	--	--	0.50 U	0.50 U	0.50 U	0.50 U	0.50 U	0.50 U	0.50 U	0.50 U	0.50 U	0.50 U	0.50 U	0.50 U
VOCs	EPA 524.2	BROMOFORM	µg/L	--	--	--	--	0.50 U	0.50 U	0.50 U	0.50 U	0.50 U	0.50 U	0.50 U	0.50 U	0.50 U	0.50 U	0.50 U	0.50 U
VOCs	EPA 524.2	BROMOMETHANE (METHYL BROMIDE)	µg/L	--	--	--	--	0.50 U	0.50 U	0.50 U	0.50 U	0.50 U	0.50 U	0.50 U	0.50 U	0.50 U	0.50 U	0.50 U	0.50 U
VOCs	EPA 524.2	CARBON DISULFIDE	µg/L	--	--	--	160	2.0 U	2.0 U	2.0 U	2.0 U	2.0 U	2.0 U	2.0 U	2.0 U	2.0 U	2.0 U	2.0 U	2.0 U
VOCs	EPA 524.2	CARBON TETRACHLORIDE	µg/L	0.50	--	0.10	--	**0.64**	**0.60**	**13**	0.20 U	0.20 U	0.20 U	**9.2**	0.20 U	0.20 U	0.20 U	0.20 U	**2.6**
VOCs	EPA 524.2	CHLOROBENZENE	µg/L	70	--	--	--	0.50 U	0.50 U	0.50 U	0.50 U	0.50 U	0.50 U	0.50 U	0.50 U	0.50 U	0.50 U	0.50 U	0.50 U
VOCs	EPA 524.2	CHLORODIBROMOMETHANE (THM)	µg/L	--	--	--	--	0.50 U	0.50 U	0.50 U	0.50 U	0.50 U	0.50 U	0.50 U	0.50 U	0.50 U	0.50 U	0.50 U	0.50 U
VOCs	EPA 524.2	CHLOROETHANE	µg/L	--	--	--	--	1.0 U	1.0 U	1.0 U	1.0 U	1.0 U	1.0 U	1.0 U	1.0 U	1.0 U	1.0 U	1.0 U	1.0 U
VOCs	EPA 524.2	CHLOROFORM	µg/L	100	--	--	--	1.4	1.4	2.9	0.60	0.50	1.6	1.4	0.50	0.40	0.95	3.0	1.1
VOCs	EPA 524.2	CHLOROMETHANE (METHYL CHLORIDE)	µg/L	--	--	--	--	0.50 U	0.50 U	0.50 U	0.50 U	0.50 U	0.50 U	0.50 J	0.50 U	0.50 U	0.50 U	0.50 U	0.50 U
VOCs	EPA 524.2	CIS-1,2-DICHLOROETHENE	µg/L	6.0	--	--	--	0.50 U	0.50 U	0.50 U	0.50 U	0.50 U	0.50 U	0.50 U	0.50 U	0.50 U	0.40 J	2.7	0.50 U
VOCs	EPA 524.2	CIS-1,3-DICHLOROPROPENE	µg/L	--	--	--	--	0.50 U	0.50 U	0.50 U	0.50 U	0.50 U	0.50 U	0.50 U	0.50 U	0.50 U	0.50 U	0.50 U	0.50 U
VOCs	EPA 524.2	DI-ISOPROPYL ETHER	µg/L	--	--	--	--	0.50 U	0.50 U	0.50 U	0.50 U	0.50 U	0.50 U	0.50 U	0.50 U	0.50 U	0.50 U	0.50 U	0.50 U
VOCs	EPA 524.2	DIBROMOMETHANE	µg/L	--	--	--	--	0.50 U	0.50 U	0.50 U	0.50 U	0.50 U	0.50 U	0.50 U	0.50 U	0.50 U	0.50 U	0.50 U	0.50 U
VOCs	EPA 524.2	DICHLORODIFLUOROMETHANE (FREON 112)	µg/L	--	--	--	1,000	0.50 U	0.50 U	0.50 U	0.50 U	0.50 U	0.50 U	0.50 U	0.50 U	0.50 U	0.50 U	0.50 U	0.50 U
VOCs	EPA 524.2	ETHYL-TERT-BUTYL ETHER (ETBE)	µg/L	--	--	--	--	3.0 U	3.0 U	3.0 U	3.0 U	3.0 U	3.0 U	3.0 U	3.0 U	3.0 U	3.0 U	3.0 U	3.0 U
VOCs	EPA 524.2	ETHYLBENZENE	µg/L	300	--	300	--	0.50 U	0.50 U	0.50 U	0.50 U	0.50 U	0.50 U	0.50 U	0.50 U	0.50 U	0.50 U	0.50 U	0.50 U
VOCs	EPA 524.2	HEXACHLOROBUTADIENE	µg/L	--	--	--	--	0.50 U	0.50 U	0.50 U	0.50 U	0.50 U	0.50 U	0.50 U	0.50 U	0.50 U	0.50 U	0.50 U	0.50 U
VOCs	EPA 524.2	ISOPROPYLBENZENE (CUMENE)	µg/L	--	--	--	770	0.50 U	0.50 U	0.50 U	0.50 U	0.50 U	0.50 U	0.50 U	0.50 U	0.50 U	0.50 U	0.50 U	0.50 U
VOCs	EPA 524.2	M-XYLENE	µg/L	--	--	--	--	0.50 U	0.50 U	0.50 U	0.50 U	0.50 U	0.50 U	0.50 U	0.50 U	0.50 U	0.50 U	0.50 U	0.50 U
VOCs	EPA 524.2	METHYL ACETATE	µg/L	--	--	--	--	10 U	10 U	10 UJ	10 UJ	10 UJ	10 UJ	10 UJ	10 UJ	10 UJ	10 UJ	10 UJ	10 U
VOCs	EPA 524.2	METHYL-T-BUTYL ETHER (MTBE)	µg/L	13	5.0	13	--	0.50 U	0.50 U	0.50 U	0.50 U	0.50 U	0.50 U	0.50 U	0.50 U	0.50 U	0.50 U	0.50 U	0.50 U
VOCs	EPA 524.2	METHYLENE CHLORIDE (DICHLOROMETHANE)	µg/L	5.0	--	4.0	--	0.50 UJ	0.50 UJ	**10 UB**	**71 B**	**85 B**	**80 B**	1.9 UB	1.4 UB	1.8 UB	1.3 UB	4.8 UB	0.50 UJ
VOCs	EPA 524.2	N-BUTYLBENZENE	µg/L	--	--	--	260	0.50 U	0.50 U	0.50 U	0.50 U	0.50 U	0.50 U	0.50 U	0.50 U	0.50 U	0.50 U	0.50 U	0.50 U
VOCs	EPA 524.2	N-PROPYLBENZENE	µg/L	--	--	--	260	0.50 U	0.50 U	0.50 U	0.50 U	0.50 U	0.50 U	0.50 U	0.50 U	0.50 U	0.50 U	0.50 U	0.50 U

TABLE 3A-5
Summary of VOC Data for JPL Monitoring Wells

Station ID:								MW-16	MW-16	MW-17-3	MW-17-4	MW-17-4	MW-18-3	MW-18-4	MW-19-3	MW-19-5	MW-21-3	MW-21-5	MW-24-2
QAQC Type:								N	DUP	N	N	DUP	N	N	N	N	N	N	N
Date Collected:								01/16/03	01/16/03	12/12/02	12/16/02	12/16/02	12/10/02	12/11/02	12/06/02	12/09/02	12/04/02	12/05/02	01/09/03
Analyte Type	**Method**	**Analyte**	**Units**	**CA Primary MCL**	**CA Secondary MCL**	**CA PHG**	**DHS Action Level**												
VOCs	EPA 524.2	NAPHTHALENE	µg/L	--	--	--	170	0.50 UJ	0.50 UJ	0.50 U	0.50 U	0.50 U	0.50 U	0.50 U	0.50 U	0.50 U	0.50 U	0.50 U	0.50 U
VOCs	EPA 524.2	O-XYLENE	µg/L	1,750	--	--	--	0.20 U	0.20 U	0.20 U	0.20 U	0.20 U	0.20 U	0.20 U	0.20 U	0.20 U	0.20 U	0.20 U	0.20 U
VOCs	EPA 524.2	P-ISOPROPYLTOLUENE	µg/L	--	--	--	--	0.50 U	0.50 U	0.50 U	0.50 U	0.50 U	0.50 U	0.50 U	0.50 U	0.50 U	0.50 U	0.50 U	0.50 U
VOCs	EPA 524.2	SEC-BUTYLBENZENE	µg/L	--	--	--	260	0.50 U	0.50 U	0.50 U	0.50 U	0.50 U	0.50 U	0.50 U	0.50 U	0.50 U	0.50 U	0.50 U	0.50 U
VOCs	EPA 524.2	STYRENE	µg/L	100	--	--	--	0.50 U	0.50 U	0.50 U	0.50 U	0.50 U	0.50 U	0.50 U	0.50 U	0.50 U	0.50 U	0.50 U	0.50 U
VOCs	EPA 524.2	TERT-AMYL-METHYL ETHER (TAME)	µg/L	--	--	--	--	3.0 U	3.0 U	3.0 U	3.0 U	3.0 U	3.0 U	3.0 U	3.0 U	3.0 U	3.0 U	3.0 U	3.0 U
VOCs	EPA 524.2	TERT-BUTYLBENZENE	µg/L	--	--	--	260	0.50 U	0.50 U	0.50 U	0.50 U	0.50 U	0.50 U	0.50 U	0.50 U	0.50 U	0.50 U	0.50 U	0.50 U
VOCs	EPA 524.2	TERTIARY BUTYL ALCOHOL (TBA)	µg/L	--	--	--	12	3.6 U	3.6 U	3.6 U	3.6 U	3.6 U	3.6 U	3.6 U	3.6 U	3.6 U	3.6 U	3.6 U	3.6 U
VOCs	EPA 524.2	TETRACHLOROETHENE (PCE)	µg/L	5.0	--	0.060	--	0.50 U	0.50 U	0.40 J	0.50 U	0.50 U	0.30 J	**5.5**	1.5	**5.4**	2.0	**21.2**	0.50 J
VOCs	EPA 524.2	TETRAHYDROFURAN	µg/L	--	--	--	--	2.2 U	2.2 U	2.2 U	2.2 U	2.2 U	2.2 U	2.2 U	2.2 U	2.2 U	2.2 U	2.2 U	2.2 U
VOCs	EPA 524.2	TOLUENE	µg/L	150	--	150	--	0.50 U	0.50 U	0.50 U	0.50 U	0.50 U	0.50 U	0.50 U	0.50 U	0.50 U	0.50 U	0.50 U	0.50 U
VOCs	EPA 524.2	TRANS-1,2-DICHLOROETHENE	µg/L	10	--	--	--	0.50 U	0.50 U	0.50 U	0.50 U	0.50 U	0.50 U	0.50 U	0.50 U	0.50 U	0.50 U	0.50 U	0.50 U
VOCs	EPA 524.2	TRANS-1,3-DICHLOROPROPENE	µg/L	--	--	--	--	0.50 U	0.50 U	0.50 U	0.50 U	0.50 U	0.50 U	0.50 U	0.50 U	0.50 U	0.50 U	0.50 U	0.50 U
VOCs	EPA 524.2	TRICHLOROETHENE (TCE)	µg/L	5.0	--	0.80	--	0.50 U	0.50 U	3.7	3.6	3.1	0.60	3.2	0.80	0.60	1.1	1.2	0.60
VOCs	EPA 524.2	TRICHLOROFLUOROMETHANE	µg/L	150	--	700	--	0.50 U	0.50 U	0.50 U	0.50 U	0.50 U	0.50 U	0.50 U	0.50 U	0.50 U	0.50 U	0.50 U	0.50 U
VOCs	EPA 524.2	VINYL ACETATE	µg/L	--	--	--	--	2.0 UJ	2.0 UJ	2.0 UJ	2.0 UJ	2.0 UJ	2.0 UJ	2.0 UJ	2.0 UJ	2.0 UJ	2.0 UJ	2.0 UJ	2.0 UJ
VOCs	EPA 524.2	VINYL CHLORIDE (CHLOROETHANE)	µg/L	0.50	--	0.050	--	0.50 U	0.50 U	0.50 U	0.50 U	0.50 U	0.50 U	0.50 U	0.50 U	0.50 U	0.50 U	0.50 U	0.50 U
VOCs	EPA 524.2	XYLENES (TOTAL)	µg/L	1,750	--	1,800	--	0.50 U	0.50 U	0.50 U	0.50 U	0.50 U	0.50 U	0.50 U	--	0.50 U	0.50 U	0.50 U	0.50 U

Notes:

N = Normal Environmental Sample
DUP = Field Duplicate Sample
"--" = Sample was not analyzed using this method.
B = Analyte is present in method blank
J = Estimated value
U = Not detected at the listed reporting limit.
UB = Not detected at the listed reporting limit; however, analyte is also present in the method blank.
UJ = The compound or analyte was analyzed for but not detected. The sample detection limit is an estimated value.
µg/L = micrograms per liter
XX = Bolding of value and qualifier means that the detection limit exceeds a CA Primary/Secondary MCL or DHS Action Level.
[ ] = Bolding and outlining of value and qualifier means that a detected value exceeds a CA Primary/Secondary MCL or DHS Action Level.

TABLE 3A-6
Summary of SVOC Data for JPL Monitoring Wells

Station ID:								MW-3-3	MW-3-5	MW-4-1	MW-4-2	MW-4-5	MW-7	MW-8	MW-10	MW-12-3	MW-12-5	MW-14-2	MW-14-4	MW-16
QAQC Type:								N	N	N	N	N	N	N	N	N	N	N	N	N
Date Collected:								01/14/03	01/14/03	01/16/03	01/16/03	01/16/03	01/16/03	01/17/03	01/17/03	01/16/03	01/16/03	01/14/03	01/14/03	01/16/03
Analyte Type	**Method**	**Analyte**	**Units**	**CA Primary MCL**	**CA Secondary MCL**	**CA PHG**	**DHS Action Level**													
SVOCs	EPA 8270	1,2,4-TRICHLOROBENZENE	µg/L	5	--	5	--	1 U	1 U	1 U	1 U	1 U	1 U	1 UJ	1 UJ	1 U	1 U	1 U	1 U	1 U
SVOCs	EPA 8270	1,2-DICHLOROBENZENE (O-DICHLOROBENZENE)	µg/L	600	--	600	--	1 U	1 U	1 U	1 U	1 U	1 U	1 UJ	1 UJ	1 U	1 U	1 U	1 U	1 U
SVOCs	EPA 8270	1,3-DICHLOROBENZENE (M-DICHLOROBENZENE)	µg/L	--	--	--	600	1 U	1 U	1 U	1 U	1 U	1 U	1 UJ	1 UJ	1 U	1 U	1 U	1 U	1 U
SVOCs	EPA 8270	1,4-DICHLOROBENZENE (PARA-DICHLOROBENZENE)	µg/L	5	--	6	--	1 U	1 U	1 U	1 U	1 U	1 U	1 UJ	1 UJ	1 U	1 U	1 U	1 U	1 U
SVOCs	EPA 8270	2,4,5-TRICHLOROPHENOL	µg/L	--	--	--	--	1 U	1 U	1 U	1 U	1 U	1 U	1 UJ	1 UJ	1 U	1 U	1 U	1 U	1 U
SVOCs	EPA 8270	2,4,6-TRICHLOROPHENOL	µg/L	--	--	--	--	1 U	1 U	1 U	1 U	1 U	1 U	1 UJ	1 UJ	1 U	1 U	1 U	1 U	1 U
SVOCs	EPA 8270	2,4-DICHLOROPHENOL	µg/L	--	--	--	--	1 U	1 U	1 U	1 U	1 U	1 U	1 UJ	1 UJ	1 U	1 U	1 U	1 U	1 U
SVOCs	EPA 8270	2,4-DIMETHYLPHENOL	µg/L	--	--	--	100	1 U	1 U	1 U	1 U	1 U	1 U	1 UJ	1 UJ	1 U	1 U	1 U	1 U	1 U
SVOCs	EPA 8270	2,4-DINITROPHENOL	µg/L	--	--	--	--	4 U	4 U	4 U	4 U	4 U	4 U	4 UJ	4 UJ	4 U	4 U	4 U	4 U	4 U
SVOCs	EPA 8270	2,4-DINITROTOLUENE	µg/L	--	--	--	--	1 U	1 U	1 U	1 U	1 U	1 U	1 UJ	1 UJ	1 U	1 U	1 U	1 U	1 U
SVOCs	EPA 8270	2,6-DINITROTOLUENE	µg/L	--	--	--	--	1 U	1 U	1 U	1 U	1 U	1 U	1 UJ	1 UJ	1 U	1 U	1 U	1 U	1 U
SVOCs	EPA 8270	2-CHLORONAPHTHALENE	µg/L	--	--	--	--	1 U	1 U	1 U	1 U	1 U	1 U	1 UJ	1 UJ	1 U	1 U	1 U	1 U	1 U
SVOCs	EPA 8270	2-CHLOROPHENOL	µg/L	--	--	--	--	1 U	1 U	1 U	1 U	1 U	1 U	1 UJ	1 UJ	1 U	1 U	1 U	1 U	1 U
SVOCs	EPA 8270	2-METHYLNAPHTHALENE	µg/L	--	--	--	--	1 U	1 U	1 U	1 U	1 U	1 U	1 UJ	1 UJ	1 U	1 U	1 U	1 U	1 U
SVOCs	EPA 8270	2-METHYLPHENOL	µg/L	--	--	--	--	1 U	1 U	1 U	1 U	1 U	1 U	1 UJ	1 UJ	1 U	1 U	1 U	1 U	1 U
SVOCs	EPA 8270	2-NITROANILINE	µg/L	--	--	--	--	1 U	1 U	1 U	1 U	1 U	1 U	1 UJ	1 UJ	1 U	1 U	1 U	1 U	1 U
SVOCs	EPA 8270	2-NITROPHENOL	µg/L	--	--	--	--	1 U	1 U	1 U	1 U	1 U	1 U	1 UJ	1 UJ	1 U	1 U	1 U	1 U	1 U
SVOCs	EPA 8270	3,3'-DICHLOROBENZIDINE	µg/L	--	--	--	--	1 U	1 U	1 U	1 U	1 U	1 U	1 UJ	1 UJ	1 U	1 U	1 U	1 U	1 U
SVOCs	EPA 8270	3-NITROANILINE	µg/L	--	--	--	--	1 U	1 U	1 U	1 U	1 U	1 U	1 UJ	1 UJ	1 U	1 U	1 U	1 U	1 U
SVOCs	EPA 8270	3/4-METHYLPHENOL	µg/L	--	--	--	--	1 U	1 U	1 U	1 U	1 U	1 U	1 UJ	1 UJ	1 U	1 U	1 U	1 U	1 U
SVOCs	EPA 8270	4,6-DINITRO-O-CRESOL	µg/L	--	--	--	--	1 U	1 U	1 U	1 U	1 U	1 U	1 UJ	1 UJ	1 U	1 U	1 U	1 U	1 U
SVOCs	EPA 8270	4-BROMOPHENYLPHENYLETHER	µg/L	--	--	--	--	1 U	1 U	1 U	1 U	1 U	1 U	1 UJ	1 UJ	1 U	1 U	1 U	1 U	1 U
SVOCs	EPA 8270	4-CHLORO-3-METHYLPHENOL	µg/L	--	--	--	--	1 U	1 U	1 U	1 U	1 U	1 U	1 UJ	1 UJ	1 U	1 U	1 U	1 U	1 U
SVOCs	EPA 8270	4-CHLOROANILINE	µg/L	--	--	--	--	4 U	4 U	4 U	4 U	4 U	4 U	4 UJ	4 UJ	4 U	4 U	4 U	4 U	4 U
SVOCs	EPA 8270	4-CHLOROPHENYLPHENYLETHER	µg/L	--	--	--	--	1 U	1 U	1 U	1 U	1 U	1 U	1 UJ	1 UJ	1 U	1 U	1 U	1 U	1 U
SVOCs	EPA 8270	4-NITROANILINE	µg/L	--	--	--	--	1 U	1 U	1 U	1 U	1 U	1 U	1 UJ	1 UJ	1 U	1 U	1 U	1 U	1 U
SVOCs	EPA 8270	4-NITROPHENOL	µg/L	--	--	--	--	3 U	3 U	3 U	3 U	3 U	3 U	3 UJ	3 UJ	3 U	3 U	3 U	3 U	3 U
SVOCs	EPA 8270	ACENAPHTHENE	µg/L	--	--	--	--	1 U	1 U	1 U	1 U	1 U	1 U	1 UJ	1 UJ	1 U	1 U	1 U	1 U	1 U
SVOCs	EPA 8270	ACENAPHTHYLENE	µg/L	--	--	--	--	1 U	1 U	1 U	1 U	1 U	1 U	1 UJ	1 UJ	1 U	1 U	1 U	1 U	1 U
SVOCs	EPA 8270	ACETOPHENONE	µg/L	--	--	--	--	1 U	1 U	1 U	1 U	1 U	1 U	1 UJ	1 UJ	1 U	1 U	1 U	1 U	1 U
SVOCs	EPA 8270	ANILINE	µg/L	--	--	--	--	4 U	4 U	4 U	4 U	4 U	4 U	4 UJ	4 UJ	4 U	4 U	4 U	4 U	4 U
SVOCs	EPA 8270	ANTHRACENE	µg/L	--	--	--	--	1 U	1 U	1 U	1 U	1 U	1 U	1 UJ	1 UJ	1 U	1 U	1 U	1 U	1 U
SVOCs	EPA 8270	BENZALDEHYDE	µg/L	--	--	--	--	1 U	1 U	1 U	1 U	1 U	1 U	1 UJ	1 UJ	1 U	1 U	1 U	1 U	1 U
SVOCs	EPA 8270	BENZO (A) ANTHRACENE	µg/L	--	--	--	--	1 U	1 U	1 U	1 U	1 U	1 U	1 UJ	1 UJ	1 U	1 U	1 U	1 U	1 U
SVOCs	EPA 8270	BENZO (A) PYRENE	µg/L	0.2	--	0.004	--	**1 U**	**1 U**	**1 U**	**1 U**	**1 U**	**1 U**	**1 UJ**	**1 UJ**	**1 U**	**1 U**	**1 U**	**1 U**	**1 U**
SVOCs	EPA 8270	BENZO (GHI) PERYLENE	µg/L	--	--	--	--	1 U	1 U	1 U	1 U	1 U	1 U	1 UJ	1 UJ	1 U	1 U	1 U	1 U	1 U
SVOCs	EPA 8270	BENZO(B & K)FLUORANTHENES	µg/L	--	--	--	--	1 U	1 U	1 U	1 U	1 U	1 U	1 UJ	1 UJ	1 U	1 U	1 U	1 U	1 U
SVOCs	EPA 8270	BENZOIC ACID	µg/L	--	--	--	--	4 U	4 U	4 U	4 U	4 U	4 U	4 UJ	4 UJ	4 U	4 U	4 U	4 U	4 U
SVOCs	EPA 8270	BENZYL ALCOHOL	µg/L	--	--	--	--	1 U	1 U	1 U	1 U	1 U	1 U	1 UJ	1 UJ	1 U	1 U	1 U	1 U	1 U
SVOCs	EPA 8270	BIS (2-CHLOROETHYL) ETHER	µg/L	--	--	--	--	1 U	1 U	1 U	1 U	1 U	1 U	1 UJ	1 UJ	1 U	1 U	1 U	1 U	1 U
SVOCs	EPA 8270	BIS (2-CHLOROISOPROPYL) ETHER	µg/L	--	--	--	--	1 U	1 U	1 U	1 U	1 U	1 U	1 UJ	1 UJ	1 U	1 U	1 U	1 U	1 U
SVOCs	EPA 8270	BIS(2-CHLOROETHOXY)METHANE	µg/L	--	--	--	--	1 U	1 U	1 U	1 U	1 U	1 U	1 UJ	1 UJ	1 U	1 U	1 U	1 U	1 U
SVOCs	EPA 8270	BIS(2-ETHYLHEXYL)PHTHALATE	µg/L	4	--	12	--	1 U	1 U	1 U	1 U	1 U	1 U	1 UJ	1 UJ	1 U	1 U	1 U	1 U	1 U
SVOCs	EPA 8270	BUTYLBENZYLPHTHALATE	µg/L	--	--	--	--	1 U	1 U	1 U	1 U	1 U	1 U	1 UJ	1 UJ	1 U	1 U	1 U	1 U	1 U
SVOCs	EPA 8270	CAPROLACTAM	µg/L	--	--	--	--	1 U	1 U	1 U	1 U	1 U	1 U	1 UJ	1 UJ	1 U	1 U	1 U	1 U	1 U
SVOCs	EPA 8270	CARBAZOLE	µg/L	--	--	--	--	1 U	1 U	1 U	1 U	1 U	1 U	1 UJ	1 UJ	1 U	1 U	1 U	1 U	1 U
SVOCs	EPA 8270	CHRYSENE	µg/L	--	--	--	--	1 U	1 U	1 U	1 U	1 U	1 U	1 UJ	1 UJ	1 U	1 U	1 U	1 U	1 U
SVOCs	EPA 8270	DI-(2-ETHYLHEXYL)ADIPATE	µg/L	400	--	--	--	1 U	1 U	1 U	1 U	1 U	1 U	1 UJ	1 UJ	1 U	1 U	1 U	1 U	1 U
SVOCs	EPA 8270	DI-N-BUTYLPHTHALATE	µg/L	--	--	--	--	1 U	1 U	1 U	1 U	1 U	1 U	1 UJ	1 UJ	1 U	1 U	1 U	1 U	1 U
SVOCs	EPA 8270	DI-N-OCTYLPHTHALATE	µg/L	--	--	--	--	1 U	1 U	1 U	1 U	1 U	1 U	1 UJ	1 UJ	1 U	1 U	1 U	1 U	1 U
SVOCs	EPA 8270	DIBENZO (A,H) ANTRACENE	µg/L	--	--	--	--	1 U	1 U	1 U	1 U	1 U	1 U	1 UJ	1 UJ	1 U	1 U	1 U	1 U	1 U
SVOCs	EPA 8270	DIBENZOFURAN	µg/L	--	--	--	--	1 U	1 U	1 U	1 U	1 U	1 U	1 UJ	1 UJ	1 U	1 U	1 U	1 U	1 U
SVOCs	EPA 8270	DIETHYLPHTHALATE	µg/L	--	--	--	--	1 U	1 U	1 U	1 U	1 U	1 U	1 UJ	1 UJ	1 U	1 U	1 U	1 U	1 U
SVOCs	EPA 8270	DIMETHYL 2,3,5,6-TETRACHLOROTEREPHTHALATE	µg/L	--	--	--	--	1 U	1 U	1 U	1 U	1 U	1 U	1 UJ	1 UJ	1 U	1 U	1 U	1 U	1 U
SVOCs	EPA 8270	DIMETHYLPHTHALATE	µg/L	--	--	--	--	1 U	1 U	1 U	1 U	1 U	1 U	1 UJ	1 UJ	1 U	1 U	1 U	1 U	1 U

TABLE 3A-6
Summary of SVOC Data for JPL Monitoring Wells

Station ID:							MW-3-3	MW-3-5	MW-4-1	MW-4-2	MW-4-5	MW-7	MW-8	MW-10	MW-12-3	MW-12-5	MW-14-2	MW-14-4	MW-16
QAQC Type:							N	N	N	N	N	N	N	N	N	N	N	N	N
Date Collected:							01/14/03	01/14/03	01/16/03	01/16/03	01/16/03	01/16/03	01/17/03	01/17/03	01/16/03	01/16/03	01/14/03	01/14/03	01/16/03
Analyte Type	**Method**	**Analyte**	**Units**	**CA Primary MCL**	**CA Secondary MCL**	**CA PHG**	**DHS Action Level**												
SVOCs	EPA 8270	FLUORANTHENE	µg/L	--	--	--	--	1 U	1 U	1 U	1 U	1 U	1 U	1 UJ	1 UJ	1 U	1 U	1 U	1 U	1 U
SVOCs	EPA 8270	FLUORENE	µg/L	--	--	--	--	1 U	1 U	1 U	1 U	1 U	1 U	1 UJ	1 UJ	1 U	1 U	1 U	1 U	1 U
SVOCs	EPA 8270	HEXACHLOROBENZENE	µg/L	1	--	--	--	1 U	1 U	1 U	1 U	1 U	1 U	1 UJ	1 UJ	1 U	1 U	1 U	1 U	1 U
SVOCs	EPA 8270	HEXACHLOROBUTADIENE	µg/L	--	--	--	--	1 U	1 U	1 U	1 U	1 U	1 U	1 UJ	1 UJ	1 U	1 U	1 U	1 U	1 U
SVOCs	EPA 8270	HEXACHLOROCYCLOPENTADIENE	µg/L	50	--	50	--	8 U	8 U	8 U	8 U	8 U	8 U	8 UJ	8 UJ	8 U	8 U	8 U	8 U	8 U
SVOCs	EPA 8270	HEXACHLOROETHANE	µg/L	--	--	--	--	1 U	1 U	1 U	1 U	1 U	1 U	1 UJ	1 UJ	1 U	1 U	1 U	1 U	1 U
SVOCs	EPA 8270	INDENO(1,2,3-C,D)PYRENE	µg/L	--	--	--	--	1 U	1 U	1 U	1 U	1 U	1 U	1 UJ	1 UJ	1 U	1 U	1 U	1 U	1 U
SVOCs	EPA 8270	ISOPHORONE	µg/L	--	--	--	--	1 U	1 U	1 U	1 U	1 U	1 U	1 UJ	1 UJ	1 U	1 U	1 U	1 U	1 U
SVOCs	EPA 8270	N-NITROSODI-N-PROPYLAMINE	µg/L	--	--	--	--	1 U	1 U	1 U	1 U	1 U	1 U	1 UJ	1 UJ	1 U	1 U	1 U	1 U	1 U
SVOCs	EPA 8270	N-NITROSODIMETHYLAMINE (NDMA)	µg/L	--	--	--	0.01	**1 U**	**1 U**	**1 U**	**1 U**	**1 U**	**1 U**	**1 UJ**	**1 UJ**	**1 U**	**1 U**	**1 U**	**1 U**	**1 U**
SVOCs	EPA 8270	N-NITROSODIPHENYLAMINE	µg/L	--	--	--	--	1 U	1 U	1 U	1 U	1 U	1 U	1 UJ	1 UJ	1 U	1 U	1 U	1 U	1 U
SVOCs	EPA 8270	NAPHTHALENE	µg/L	--	--	--	170	1 U	1 U	1 U	1 U	1 U	1 U	1 UJ	1 UJ	1 U	1 U	1 U	1 U	1 U
SVOCs	EPA 8270	NITROBENZENE	µg/L	--	--	--	--	1 U	1 U	1 U	1 U	1 U	1 U	1 UJ	1 UJ	1 U	1 U	1 U	1 U	1 U
SVOCs	EPA 8270	PENTACHLOROPHENOL	µg/L	1	--	0.4	--	**4 U**	**4 U**	**4 U**	**4 U**	**4 U**	**4 U**	**4 UJ**	**4 UJ**	**4 U**	**4 U**	**4 U**	**4 U**	**4 U**
SVOCs	EPA 8270	PHENANTHRENE	µg/L	--	--	--	--	1 U	1 U	1 U	1 U	1 U	1 U	1 UJ	1 UJ	1 U	1 U	1 U	1 U	1 U
SVOCs	EPA 8270	PHENOL	µg/L	--	--	--	4200	1 U	1 U	1 U	1 U	1 U	1 U	1 UJ	1 UJ	1 U	1 U	1 U	1 U	1 U
SVOCs	EPA 8270	PYRENE	µg/L	--	--	--	--	1 U	1 U	1 U	1 U	1 U	1 U	1 UJ	1 UJ	1 U	1 U	1 U	1 U	1 U
SVOCs	EPA 8270	PYRIDINE	µg/L	--	--	--	--	3 U	3 U	3 U	3 U	3 U	3 U	3 UJ	3 UJ	3 U	3 U	3 U	3 U	3 U

Notes:

N = Normal Environmental Sample
DUP = Field Duplicate Sample
"--" = Sample was not analyzed using this method.
J = Estimated value
U = Not detected at the listed reporting limit.
UJ = The compound or analyte was analyzed for but not detected. The sample detection limit is an estimated value.
µg/L = micrograms per liter
XX = Bolding of value and qualifier means that the detection limit exceeds a CA Primary/Secondary MCL or DHS Action Level.
[ ] = Bolding and outlining of value and qualifier means that a detected value exceeds a CA Primary/Secondary MCL or DHS Action Level.

TABLE 3A-6
Summary of SVOC Data for JPL Monitoring Wells

Station ID:								MW-16	MW-17-3	MW-17-4	MW-17-4	MW-18-3	MW-18-4	MW-19-3	MW-19-5	MW-21-3	MW-21-5	MW-24-2
QAQC Type:								DUP	N	N	DUP	N	N	N	N	N	N	N
Date Collected:								01/16/03	01/21/03	01/14/03	01/14/03	01/20/03	01/20/03	01/14/03	01/14/03	01/14/03	01/14/03	01/16/03
Analyte Type	**Method**	**Analyte**	**Units**	**CA Primary MCL**	**CA Secondary MCL**	**CA PHG**	**DHS Action Level**											
SVOCs	EPA 8270	1,2,4-TRICHLOROBENZENE	µg/L	5	--	5	--	1 U	1 UJ	1 U	1 U	1 UJ	1 UJ	1 U	1 U	1 U	1 U	1 U
SVOCs	EPA 8270	1,2-DICHLOROBENZENE (O-DICHLOROBENZENE)	µg/L	600	--	600	--	1 U	1 UJ	1 U	1 U	1 UJ	1 UJ	1 U	1 U	1 U	1 U	1 U
SVOCs	EPA 8270	1,3-DICHLOROBENZENE (M-DICHLOROBENZENE)	µg/L	--	--	--	600	1 U	1 UJ	1 U	1 U	1 UJ	1 UJ	1 U	1 U	1 U	1 U	1 U
SVOCs	EPA 8270	1,4-DICHLOROBENZENE (PARA-DICHLOROBENZENE)	µg/L	5	--	6	--	1 U	1 UJ	1 U	1 U	1 UJ	1 UJ	1 U	1 U	1 U	1 U	1 U
SVOCs	EPA 8270	2,4,5-TRICHLOROPHENOL	µg/L	--	--	--	--	1 U	1 UJ	1 U	1 U	1 UJ	1 UJ	1 U	1 U	1 U	1 U	1 U
SVOCs	EPA 8270	2,4,6-TRICHLOROPHENOL	µg/L	--	--	--	--	1 U	1 UJ	1 U	1 U	1 UJ	1 UJ	1 U	1 U	1 U	1 U	1 U
SVOCs	EPA 8270	2,4-DICHLOROPHENOL	µg/L	--	--	--	--	1 U	1 UJ	1 U	1 U	1 UJ	1 UJ	1 U	1 U	1 U	1 U	1 U
SVOCs	EPA 8270	2,4-DIMETHYLPHENOL	µg/L	--	--	--	100	1 U	1 UJ	1 U	1 U	1 UJ	1 UJ	1 U	1 U	1 U	1 U	1 U
SVOCs	EPA 8270	2,4-DINITROPHENOL	µg/L	--	--	--	--	4 U	4 UJ	4 U	4 U	4 UJ	4 UJ	4 U	4 U	4 U	4 U	4 U
SVOCs	EPA 8270	2,4-DINITROTOLUENE	µg/L	--	--	--	--	1 U	1 UJ	1 U	1 U	1 UJ	1 UJ	1 U	1 U	1 U	1 U	1 U
SVOCs	EPA 8270	2,6-DINITROTOLUENE	µg/L	--	--	--	--	1 U	1 UJ	1 U	1 U	1 UJ	1 UJ	1 U	1 U	1 U	1 U	1 U
SVOCs	EPA 8270	2-CHLORONAPHTHALENE	µg/L	--	--	--	--	1 U	1 UJ	1 U	1 U	1 UJ	1 UJ	1 U	1 U	1 U	1 U	1 U
SVOCs	EPA 8270	2-CHLOROPHENOL	µg/L	--	--	--	--	1 U	1 UJ	1 U	1 U	1 UJ	1 UJ	1 U	1 U	1 U	1 U	1 U
SVOCs	EPA 8270	2-METHYLNAPHTHALENE	µg/L	--	--	--	--	1 U	1 UJ	1 U	1 U	1 UJ	1 UJ	1 U	1 U	1 U	1 U	1 U
SVOCs	EPA 8270	2-METHYLPHENOL	µg/L	--	--	--	--	1 U	1 UJ	1 U	1 U	1 UJ	1 UJ	1 U	1 U	1 U	1 U	1 U
SVOCs	EPA 8270	2-NITROANILINE	µg/L	--	--	--	--	1 U	1 UJ	1 U	1 U	1 UJ	1 UJ	1 U	1 U	1 U	1 U	1 U
SVOCs	EPA 8270	2-NITROPHENOL	µg/L	--	--	--	--	1 U	1 UJ	1 U	1 U	1 UJ	1 UJ	1 U	1 U	1 U	1 U	1 U
SVOCs	EPA 8270	3,3'-DICHLOROBENZIDINE	µg/L	--	--	--	--	1 U	1 UJ	1 U	1 U	1 UJ	1 UJ	1 U	1 U	1 U	1 U	1 U
SVOCs	EPA 8270	3-NITROANILINE	µg/L	--	--	--	--	1 U	1 UJ	1 U	1 U	1 UJ	1 UJ	1 U	1 U	1 U	1 U	1 U
SVOCs	EPA 8270	3/4-METHYLPHENOL	µg/L	--	--	--	--	1 U	1 UJ	1 U	1 U	1 UJ	1 UJ	1 U	1 U	1 U	1 U	1 U
SVOCs	EPA 8270	4,6-DINITRO-O-CRESOL	µg/L	--	--	--	--	1 U	1 UJ	1 U	1 U	1 UJ	1 UJ	1 U	1 U	1 U	1 U	1 U
SVOCs	EPA 8270	4-BROMOPHENYLPHENYLETHER	µg/L	--	--	--	--	1 U	1 UJ	1 U	1 U	1 UJ	1 UJ	1 U	1 U	1 U	1 U	1 U
SVOCs	EPA 8270	4-CHLORO-3-METHYLPHENOL	µg/L	--	--	--	--	1 U	1 UJ	1 U	1 U	1 UJ	1 UJ	1 U	1 U	1 U	1 U	1 U
SVOCs	EPA 8270	4-CHLOROANILINE	µg/L	--	--	--	--	4 U	4 UJ	4 U	4 U	4 UJ	4 UJ	4 U	4 U	4 U	4 U	4 U
SVOCs	EPA 8270	4-CHLOROPHENYLPHENYLETHER	µg/L	--	--	--	--	1 U	1 UJ	1 U	1 U	1 UJ	1 UJ	1 U	1 U	1 U	1 U	1 U
SVOCs	EPA 8270	4-NITROANILINE	µg/L	--	--	--	--	1 U	1 UJ	1 U	1 U	1 UJ	1 UJ	1 U	1 U	1 U	1 U	1 U
SVOCs	EPA 8270	4-NITROPHENOL	µg/L	--	--	--	--	3 U	3 UJ	3 U	3 U	3 UJ	3 UJ	3 U	3 U	3 U	3 U	3 U
SVOCs	EPA 8270	ACENAPHTHENE	µg/L	--	--	--	--	1 U	1 UJ	1 U	1 U	1 UJ	1 UJ	1 U	1 U	1 U	1 U	1 U
SVOCs	EPA 8270	ACENAPHTHYLENE	µg/L	--	--	--	--	1 U	1 UJ	1 U	1 U	1 UJ	1 UJ	1 U	1 U	1 U	1 U	1 U
SVOCs	EPA 8270	ACETOPHENONE	µg/L	--	--	--	--	1 U	1 UJ	1 U	1 U	1 UJ	1 UJ	1 U	1 U	1 U	1 U	1 U
SVOCs	EPA 8270	ANILINE	µg/L	--	--	--	--	4 U	4 UJ	4 U	4 U	4 UJ	4 UJ	4 U	4 U	4 U	4 U	4 U
SVOCs	EPA 8270	ANTHRACENE	µg/L	--	--	--	--	1 U	1 UJ	1 U	1 U	1 UJ	1 UJ	1 U	1 U	1 U	1 U	1 U
SVOCs	EPA 8270	BENZALDEHYDE	µg/L	--	--	--	--	1 U	1 UJ	1 U	1 U	1 UJ	1 UJ	1 U	1 U	1 U	1 U	1 U
SVOCs	EPA 8270	BENZO (A) ANTHRACENE	µg/L	--	--	--	--	1 U	1 UJ	1 U	1 U	1 UJ	1 UJ	1 U	1 U	1 U	1 U	1 U
SVOCs	EPA 8270	BENZO (A) PYRENE	µg/L	0.2	--	0.004	--	**1 U**	**1 UJ**	**1 U**	**1 U**	**1 UJ**	**1 UJ**	**1 U**	**1 U**	**1 U**	**1 U**	**1 U**
SVOCs	EPA 8270	BENZO (GHI) PERYLENE	µg/L	--	--	--	--	1 U	1 UJ	1 U	1 U	1 UJ	1 UJ	1 U	1 U	1 U	1 U	1 U
SVOCs	EPA 8270	BENZO(B & K)FLUORANTHENES	µg/L	--	--	--	--	1 U	1 UJ	1 U	1 U	1 UJ	1 UJ	1 U	1 U	1 U	1 U	1 U
SVOCs	EPA 8270	BENZOIC ACID	µg/L	--	--	--	--	4 U	4 UJ	4 U	4 U	4 UJ	4 UJ	4 U	4 U	4 U	4 U	4 U
SVOCs	EPA 8270	BENZYL ALCOHOL	µg/L	--	--	--	--	1 U	1 UJ	1 U	1 U	1 UJ	1 UJ	1 U	1 U	1 U	1 U	1 U
SVOCs	EPA 8270	BIS (2-CHLOROETHYL) ETHER	µg/L	--	--	--	--	1 U	1 UJ	1 U	1 U	1 UJ	1 UJ	1 U	1 U	1 U	1 U	1 U
SVOCs	EPA 8270	BIS (2-CHLOROISOPROPYL) ETHER	µg/L	--	--	--	--	1 U	1 UJ	1 U	1 U	1 UJ	1 UJ	1 U	1 U	1 U	1 U	1 U
SVOCs	EPA 8270	BIS(2-CHLOROETHOXY)METHANE	µg/L	--	--	--	--	1 U	1 UJ	1 U	1 U	1 UJ	1 UJ	1 U	1 U	1 U	1 U	1 U
SVOCs	EPA 8270	BIS(2-ETHYLHEXYL)PHTHALATE	µg/L	4	--	12	--	1 U	1 UJ	1 U	1 U	1 UJ	1 UJ	1 U	1 U	1 U	1 U	1 U
SVOCs	EPA 8270	BUTYLBENZYLPHTHALATE	µg/L	--	--	--	--	1 U	1 UJ	1 U	1 U	1 UJ	1 UJ	1 U	1 U	1 U	1 U	1 U
SVOCs	EPA 8270	CAPROLACTAM	µg/L	--	--	--	--	1 U	1 UJ	1 U	1 U	1 UJ	1 UJ	1 U	1 U	1 U	1 U	1 U
SVOCs	EPA 8270	CARBAZOLE	µg/L	--	--	--	--	1 U	1 UJ	1 U	1 U	1 UJ	1 UJ	1 U	1 U	1 U	1 U	1 U
SVOCs	EPA 8270	CHRYSENE	µg/L	--	--	--	--	1 U	1 UJ	1 U	1 U	1 UJ	1 UJ	1 U	1 U	1 U	1 U	1 U
SVOCs	EPA 8270	DI-(2-ETHYLHEXYL)ADIPATE	µg/L	400	--	--	--	1 U	1 UJ	1 U	1 U	1 UJ	1 UJ	1 U	1 U	1 U	1 U	1 U
SVOCs	EPA 8270	DI-N-BUTYLPHTHALATE	µg/L	--	--	--	--	1 U	1 UJ	1 U	1 U	1 UJ	1 UJ	1 U	1 U	1 U	1 U	1 U
SVOCs	EPA 8270	DI-N-OCTYLPHTHALATE	µg/L	--	--	--	--	1 U	1 UJ	1 U	1 U	1 UJ	1 UJ	1 U	1 U	1 U	1 U	1 U
SVOCs	EPA 8270	DIBENZO (A,H) ANTRACENE	µg/L	--	--	--	--	1 U	1 UJ	1 U	1 U	1 UJ	1 UJ	1 U	1 U	1 U	1 U	1 U
SVOCs	EPA 8270	DIBENZOFURAN	µg/L	--	--	--	--	1 U	1 UJ	1 U	1 U	1 UJ	1 UJ	1 U	1 U	1 U	1 U	1 U
SVOCs	EPA 8270	DIETHYLPHTHALATE	µg/L	--	--	--	--	1 U	1 UJ	1 U	1 U	1 UJ	1 UJ	1 U	1 U	1 U	1 U	1 U
SVOCs	EPA 8270	DIMETHYL 2,3,5,6-TETRACHLOROTEREPHTHALATE	µg/L	--	--	--	--	1 U	1 UJ	1 U	1 U	1 UJ	1 UJ	1 U	1 U	1 U	1 U	1 U
SVOCs	EPA 8270	DIMETHYLPHTHALATE	µg/L	--	--	--	--	1 U	1 UJ	1 U	1 U	1 UJ	1 UJ	1 U	1 U	1 U	1 U	1 U

TABLE 3A-6
Summary of SVOC Data for JPL Monitoring Wells

Station ID:								MW-16	MW-17-3	MW-17-4	MW-17-4	MW-18-3	MW-18-4	MW-19-3	MW-19-5	MW-21-3	MW-21-5	MW-24-2
QAQC Type:								DUP	N	N	DUP	N	N	N	N	N	N	N
Date Collected:								01/16/03	01/21/03	01/14/03	01/14/03	01/20/03	01/20/03	01/14/03	01/14/03	01/14/03	01/14/03	01/16/03
Analyte Type	**Method**	**Analyte**	**Units**	**CA Primary MCL**	**CA Secondary MCL**	**CA PHG**	**DHS Action Level**											
SVOCs	EPA 8270	FLUORANTHENE	µg/L	--	--	--	--	1 U	1 UJ	1 U	1 U	1 UJ	1 UJ	1 U	1 U	1 U	1 U	1 U
SVOCs	EPA 8270	FLUORENE	µg/L	--	--	--	--	1 U	1 UJ	1 U	1 U	1 UJ	1 UJ	1 U	1 U	1 U	1 U	1 U
SVOCs	EPA 8270	HEXACHLOROBENZENE	µg/L	1	--	--	--	1 U	1 UJ	1 U	1 U	1 UJ	1 UJ	1 U	1 U	1 U	1 U	1 U
SVOCs	EPA 8270	HEXACHLOROBUTADIENE	µg/L	--	--	--	--	1 U	1 UJ	1 U	1 U	1 UJ	1 UJ	1 U	1 U	1 U	1 U	1 U
SVOCs	EPA 8270	HEXACHLOROCYCLOPENTADIENE	µg/L	50	--	50	--	8 U	8 UJ	8 U	8 U	8 UJ	8 UJ	8 U	8 U	8 U	8 U	8 U
SVOCs	EPA 8270	HEXACHLOROETHANE	µg/L	--	--	--	--	1 U	1 UJ	1 U	1 U	1 UJ	1 UJ	1 U	1 U	1 U	1 U	1 U
SVOCs	EPA 8270	INDENO(1,2,3-C,D)PYRENE	µg/L	--	--	--	--	1 U	1 UJ	1 U	1 U	1 UJ	1 UJ	1 U	1 U	1 U	1 U	1 U
SVOCs	EPA 8270	ISOPHORONE	µg/L	--	--	--	--	1 U	1 UJ	1 U	1 U	1 UJ	1 UJ	1 U	1 U	1 U	1 U	1 U
SVOCs	EPA 8270	N-NITROSODI-N-PROPYLAMINE	µg/L	--	--	--	--	1 U	1 UJ	1 U	1 U	1 UJ	1 UJ	1 U	1 U	1 U	1 U	1 U
SVOCs	EPA 8270	N-NITROSODIMETHYLAMINE (NDMA)	µg/L	--	--	--	0.01	**1 U**	**1 UJ**	**1 U**	**1 U**	**1 UJ**	**1 UJ**	**1 U**	**1 U**	**1 U**	**1 U**	**1 U**
SVOCs	EPA 8270	N-NITROSODIPHENYLAMINE	µg/L	--	--	--	--	1 U	1 UJ	1 U	1 U	1 UJ	1 UJ	1 U	1 U	1 U	1 U	1 U
SVOCs	EPA 8270	NAPHTHALENE	µg/L	--	--	--	170	1 U	1 UJ	1 U	1 U	1 UJ	1 UJ	1 U	1 U	1 U	1 U	1 U
SVOCs	EPA 8270	NITROBENZENE	µg/L	--	--	--	--	1 U	1 UJ	1 U	1 U	1 UJ	1 UJ	1 U	1 U	1 U	1 U	1 U
SVOCs	EPA 8270	PENTACHLOROPHENOL	µg/L	1	--	0.4	--	**4 U**	**4 UJ**	**4 U**	**4 U**	**4 UJ**	**4 UJ**	**4 U**	**4 U**	**4 U**	**4 U**	**4 U**
SVOCs	EPA 8270	PHENANTHRENE	µg/L	--	--	--	--	1 U	1 UJ	1 U	1 U	1 UJ	1 UJ	1 U	1 U	1 U	1 U	1 U
SVOCs	EPA 8270	PHENOL	µg/L	--	--	--	4200	1 U	1 UJ	1 U	1 U	1 UJ	1 UJ	1 U	1 U	1 U	1 U	1 U
SVOCs	EPA 8270	PYRENE	µg/L	--	--	--	--	1 U	1 UJ	1 U	1 U	1 UJ	1 UJ	1 U	1 U	1 U	1 U	1 U
SVOCs	EPA 8270	PYRIDINE	µg/L	--	--	--	--	3 U	3 UJ	3 U	3 U	3 UJ	3 UJ	3 U	3 U	3 U	3 U	3 U

Notes:

N = Normal Environmental Sample
DUP = Field Duplicate Sample
"--" = Sample was not analyzed using this method.
J = Estimated value
U = Not detected at the listed reporting limit.
UJ = The compound or analyte was analyzed for but not detected. The sample detection limit is an estimated value.
µg/L = micrograms per liter
XX = Bolding of value and qualifier means that the detection limit exceeds a CA Primary/Secondary MCL or DHS Action Level.
[ ] = Bolding and outlining of value and qualifier means that a detected value exceeds a CA Primary/Secondary MCL or DHS Action Level.

TABLE 3A-7
Summary of Pesticides/PCBs Data for JPL Monitoring Wells

Station ID:								MW-3-3	MW-3-5	MW-4-1	MW-4-2	MW-4-5	MW-7	MW-8	MW-10	MW-12-3	MW-12-5	MW-14-2	MW-14-4	MW-16	MW-16
QAQC Type:								N	N	N	N	N	N	N	N	N	N	N	N	N	DUP
Date Collected:								02/24/03	02/27/03	12/30/02	12/30/02	12/30/02	01/16/03	01/17/03	01/17/03	01/06/03	01/06/03	12/19/02	12/19/02	01/16/03	01/16/03
Analyte Type	**Method**	**Analyte**	**Units**	**CA Primary MCL**	**CA Secondary MCL**	**CA PHG**	**DHS Action Level**														
Pesticides/PCBs	EPA 508	2,4'-DDD	µg/L	--	--	--	--	0.05 U	0.05 U	0.05 UJ	0.05 UJ	0.05 UJ	0.05 U	0.05 U	0.05 U	0.05 UJ	0.05 U	0.05 UJ	0.05 UJ	0.05 U	0.05 U
Pesticides/PCBs	EPA 508	2,4'-DDE	µg/L	--	--	--	--	0.05 U	0.05 U	0.05 UJ	0.05 UJ	0.05 UJ	0.05 U	0.05 U	0.05 U	0.05 UJ	0.05 U	0.05 UJ	0.05 UJ	0.05 U	0.05 U
Pesticides/PCBs	EPA 508	2,4'-DDT	µg/L	--	--	--	--	0.02 U	0.02 U	0.02 UJ	0.02 UJ	0.02 UJ	0.02 U	0.02 U	0.02 U	0.02 UJ	0.02 U	0.02 UJ	0.02 UJ	0.02 U	0.02 U
Pesticides/PCBs	EPA 508	4,4-DDD	µg/L	--	--	--	--	0.02 U	0.02 U	0.02 UJ	0.02 UJ	0.02 UJ	0.02 U	0.02 U	0.02 U	0.02 UJ	0.02 U	0.02 UJ	0.02 UJ	0.02 U	0.02 U
Pesticides/PCBs	EPA 508	4,4-DDE	µg/L	--	--	--	--	0.01 U	0.01 U	0.01 UJ	0.01 UJ	0.01 UJ	0.01 U	0.01 U	0.01 U	0.01 UJ	0.01 UJ	0.01 UJ	0.01 UJ	0.01 U	0.01 U
Pesticides/PCBs	EPA 508	4,4-DDT	µg/L	--	--	--	--	0.02 U	0.02 U	0.02 UJ	0.02 UJ	0.02 UJ	0.02 U	0.02 U	0.02 U	0.02 UJ	0.02 UJ	0.02 UJ	0.02 UJ	0.02 U	0.02 U
Pesticides/PCBs	EPA 508	ALACHLOR	µg/L	2	--	4	--	0.1 U	0.1 U	0.1 UJ	0.1 UJ	0.1 UJ	0.1 U	0.1 U	0.1 U	0.1 UJ	0.1 U	0.1 UJ	0.1 UJ	0.1 U	0.1 U
Pesticides/PCBs	EPA 508	ALDRIN	µg/L	--	--	--	0.002	**0.05 U**	**0.05 U**	**0.05 UJ**	**0.05 UJ**	**0.05 UJ**	**0.05 UJ**	**0.05 UJ**	**0.05 UJ**	**0.05 UJ**	**0.05 UJ**	**0.05 UJ**	**0.05 UJ**	**0.05 UJ**	**0.05 UJ**
Pesticides/PCBs	EPA 508	ALPHA-BHC	µg/L	--	--	--	0.015	**0.05 U**	**0.05 U**	**0.05 UJ**	**0.05 UJ**	**0.05 UJ**	**0.05 UJ**	**0.05 UJ**	**0.05 UJ**	**0.05 UJ**	**0.05 UJ**	**0.05 UJ**	**0.05 UJ**	**0.05 UJ**	**0.05 UJ**
Pesticides/PCBs	EPA 508	BENFLURALIN (BENEFIN)	µg/L	--	--	--	--	0.1 U	0.1 U	0.1 UJ	0.1 UJ	0.1 UJ	0.1 U	0.1 U	0.1 U	0.1 UJ	0.1 U	0.1 UJ	0.1 UJ	0.1 U	0.1 U
Pesticides/PCBs	EPA 508	BETA-BHC	µg/L	--	--	--	0.025	**0.05 U**	**0.05 U**	**0.05 UJ**	**0.05 UJ**	**0.05 UJ**	**0.05 U**	**0.05 U**	**0.05 U**	**0.05 UJ**	**0.05 U**	**0.05 UJ**	**0.05 UJ**	**0.05 U**	**0.05 U**
Pesticides/PCBs	EPA 508	CAPTAN	µg/L	--	--	--	1.5	0.1 U	0.1 U	0.1 UJ	0.1 UJ	0.1 UJ	0.1 U	0.1 U	0.1 U	0.1 UJ	0.1 U	0.1 UJ	0.1 UJ	0.1 U	0.1 U
Pesticides/PCBs	EPA 508	CARBOPHENOTHION	µg/L	--	--	--	--	0.05 U	0.05 U	0.05 UJ	0.05 UJ	0.05 UJ	0.05 U	0.05 U	0.05 U	0.05 UJ	0.05 U	0.05 UJ	0.05 UJ	0.05 U	0.05 U
Pesticides/PCBs	EPA 508	CHLORDANE	µg/L	0.1	--	0.03	--	0.05 U	0.05 U	0.05 UJ	0.05 UJ	0.05 UJ	0.05 U	0.05 U	0.05 U	0.05 UJ	0.05 U	0.05 UJ	0.05 UJ	0.05 U	0.05 U
Pesticides/PCBs	EPA 508	CHLOROTHALONIL	µg/L	--	--	--	--	0.05 U	0.05 U	0.05 UJ	0.05 UJ	0.05 UJ	0.05 UJ	0.05 UJ	0.05 UJ	0.05 UJ	0.05 UJ	0.05 UJ	0.05 UJ	0.05 UJ	0.05 UJ
Pesticides/PCBs	EPA 508	DELTA-BHC	µg/L	--	--	--	0.025	**0.05 U**	**0.05 U**	**0.05 UJ**	**0.05 UJ**	**0.05 UJ**	**0.05 UJ**	**0.05 UJ**	**0.05 UJ**	**0.05 UJ**	**0.05 UJ**	**0.05 UJ**	**0.05 UJ**	**0.05 UJ**	**0.05 UJ**
Pesticides/PCBs	EPA 508	DICOFOL	µg/L	--	--	--	--	0.1 U	0.1 U	0.1 UJ	0.1 UJ	0.1 UJ	0.1 UJ	0.1 UJ	0.1 UJ	0.1 UJ	0.1 UJ	0.1 UJ	0.1 UJ	0.1 UJ	0.1 UJ
Pesticides/PCBs	EPA 508	DIELDRIN	µg/L	--	--	--	0.002	**0.02 U**	**0.02 U**	**0.02 UJ**	**0.02 UJ**	**0.02 UJ**	**0.02 U**	**0.02 U**	**0.02 U**	**0.02 UJ**	**0.02 U**	**0.02 UJ**	**0.02 UJ**	**0.02 U**	**0.02 U**
Pesticides/PCBs	EPA 508	DMPA	µg/L	--	--	--	--	0.1 U	0.1 U	0.1 UJ	0.1 UJ	0.1 UJ	0.1 U	0.1 U	0.1 U	0.1 UJ	0.1 U	0.1 UJ	0.1 UJ	0.1 U	0.1 U
Pesticides/PCBs	EPA 508	ENDOSULFAN I	µg/L	--	--	--	--	0.02 U	0.02 U	0.02 UJ	0.02 UJ	0.02 UJ	0.02 U	0.02 U	0.02 U	0.02 UJ	0.02 U	0.02 UJ	0.02 UJ	0.02 U	0.02 U
Pesticides/PCBs	EPA 508	ENDOSULFAN II	µg/L	--	--	--	--	0.01 U	0.01 U	0.01 UJ	0.01 UJ	0.01 UJ	0.01 U	0.01 U	0.01 U	0.01 UJ	0.01 U	0.01 UJ	0.01 UJ	0.01 U	0.01 U
Pesticides/PCBs	EPA 508	ENDOSULFAN SULFATE	µg/L	--	--	--	--	0.05 U	0.05 U	0.05 UJ	0.05 UJ	0.05 UJ	0.05 U	0.05 U	0.05 U	0.05 UJ	0.05 U	0.05 UJ	0.05 UJ	0.05 U	0.05 U
Pesticides/PCBs	EPA 508	ENDRIN	µg/L	2	--	1.8	--	0.05 U	0.05 U	0.05 UJ	0.05 UJ	0.05 UJ	0.05 U	0.05 U	0.05 U	0.05 UJ	0.05 U	0.05 UJ	0.05 UJ	0.05 U	0.05 U
Pesticides/PCBs	EPA 508	ENDRIN ALDEHYDE	µg/L	--	--	--	--	0.05 U	0.05 U	0.05 UJ	0.05 UJ	0.05 UJ	0.05 U	0.05 U	0.05 U	0.05 UJ	0.05 U	0.05 UJ	0.05 UJ	0.05 U	0.05 U
Pesticides/PCBs	EPA 508	ENDRIN KETONE	µg/L	--	--	--	--	0.05 U	0.05 U	0.05 UJ	0.05 UJ	0.05 UJ	0.05 U	0.05 U	0.05 U	0.05 UJ	0.05 U	0.05 UJ	0.05 UJ	0.05 U	0.05 U
Pesticides/PCBs	EPA 508	GAMMA- BHC (LINDANE)	µg/L	0.2	--	0.032	--	0.05 U	0.05 U	0.05 UJ	0.05 UJ	0.05 UJ	0.05 U	0.05 U	0.05 U	0.05 UJ	0.05 U	0.05 UJ	0.05 UJ	0.05 U	0.05 U
Pesticides/PCBs	EPA 508	HEPTACHLOR	µg/L	0.01	--	0.008	--	0.01 U	0.01 U	0.01 UJ	0.01 UJ	0.01 UJ	0.01 UJ	0.01 UJ	0.01 UJ	0.01 UJ	0.01 UJ	0.01 UJ	0.01 UJ	0.01 UJ	0.01 UJ
Pesticides/PCBs	EPA 508	HEPTACHLOR EPOXIDE	µg/L	0.01	--	0.006	--	0.01 U	0.01 U	0.01 UJ	0.01 UJ	0.01 UJ	0.01 U	0.01 U	0.01 U	0.01 UJ	0.01 U	0.01 UJ	0.01 UJ	0.01 U	0.01 U
Pesticides/PCBs	EPA 508	HEXACHLOROBENZENE	µg/L	1	--	--	--	0.05 U	0.05 U	0.05 UJ	0.05 UJ	0.05 UJ	0.05 UJ	0.05 UJ	0.05 UJ	0.05 UJ	0.05 UJ	0.05 UJ	0.05 UJ	0.05 UJ	0.05 UJ
Pesticides/PCBs	EPA 508	METHOXYCHLOR	µg/L	30	--	30	--	0.05 U	0.05 U	0.05 UJ	0.05 UJ	0.05 UJ	0.05 U	0.05 U	0.05 U	0.05 UJ	0.05 U	0.05 UJ	0.05 UJ	0.05 U	0.05 U
Pesticides/PCBs	EPA 508	NITROFEN	µg/L	--	--	--	--	0.05 U	0.05 U	0.05 UJ	0.05 UJ	0.05 UJ	0.05 U	0.05 U	0.05 U	0.05 UJ	0.05 U	0.05 UJ	0.05 UJ	0.05 U	0.05 U
Pesticides/PCBs	EPA 508	PCB-1016	µg/L	--	--	--	--	0.5 U	0.5 U	0.5 UJ	0.5 UJ	0.5 UJ	0.5 U	0.5 U	0.5 U	0.5 UJ	0.5 U	0.5 UJ	0.5 UJ	0.5 U	0.5 U
Pesticides/PCBs	EPA 508	PCB-1221	µg/L	--	--	--	--	0.5 U	0.5 U	0.5 UJ	0.5 UJ	0.5 UJ	0.5 U	0.5 U	0.5 U	0.5 UJ	0.5 U	0.5 UJ	0.5 UJ	0.5 U	0.5 U
Pesticides/PCBs	EPA 508	PCB-1232	µg/L	--	--	--	--	0.5 U	0.5 U	0.5 UJ	0.5 UJ	0.5 UJ	0.5 U	0.5 U	0.5 U	0.5 UJ	0.5 U	0.5 UJ	0.5 UJ	0.5 U	0.5 U
Pesticides/PCBs	EPA 508	PCB-1242	µg/L	--	--	--	--	0.5 U	0.5 U	0.5 UJ	0.5 UJ	0.5 UJ	0.5 U	0.5 U	0.5 U	0.5 UJ	0.5 U	0.5 UJ	0.5 UJ	0.5 U	0.5 U
Pesticides/PCBs	EPA 508	PCB-1248	µg/L	--	--	--	--	0.5 U	0.5 U	0.5 UJ	0.5 UJ	0.5 UJ	0.5 U	0.5 U	0.5 U	0.5 UJ	0.5 U	0.5 UJ	0.5 UJ	0.5 U	0.5 U
Pesticides/PCBs	EPA 508	PCB-1254	µg/L	--	--	--	--	0.5 U	0.5 U	0.5 UJ	0.5 UJ	0.5 UJ	0.5 U	0.5 U	0.5 U	0.5 UJ	0.5 U	0.5 UJ	0.5 UJ	0.5 U	0.5 U
Pesticides/PCBs	EPA 508	PCB-1260	µg/L	--	--	--	--	0.5 U	0.5 U	0.5 UJ	0.5 UJ	0.5 UJ	0.5 UJ	0.5 UJ	0.5 UJ	0.5 UJ	0.5 U	0.5 UJ	0.5 UJ	0.5 UJ	0.5 UJ
Pesticides/PCBs	EPA 508	PCNB	µg/L	--	--	--	--	0.05 U	0.05 U	0.05 UJ	0.05 UJ	0.05 UJ	0.05 U	0.05 U	0.05 U	0.05 UJ	0.05 U	0.05 UJ	0.05 UJ	0.05 U	0.05 U
Pesticides/PCBs	EPA 508	PROPACHLOR	µg/L	--	--	--	--	0.1 U	0.1 U	0.1 UJ	0.1 UJ	0.1 UJ	0.1 U	0.1 U	0.1 U	0.1 UJ	0.1 U	0.1 UJ	0.1 UJ	0.1 U	0.1 U
Pesticides/PCBs	EPA 508	TOXAPHENE	µg/L	3	--	--	--	0.5 U	0.5 U	0.5 UJ	0.5 UJ	0.5 UJ	0.5 U	0.5 U	0.5 U	0.5 UJ	0.5 UJ	0.5 UJ	0.5 UJ	0.5 U	0.5 U

Notes:

N = Normal Environmental Sample
DUP = Field Duplicate Sample
"--" = Sample was not analyzed using this method.
J = Estimated value
U = Not detected at the listed reporting limit.
UJ = The compound or analyte was analyzed for but not detected. The sample detection limit is an estimated value.
µg/L = micrograms per liter
XX = Bolding of value and qualifier means that the detection limit exceeds a CA Primary/Secondary MCL or DHS Action Level.
[ ] = Bolding and outlining of value and qualifier means that a detected value exceeds a CA Primary/Secondary MCL or DHS Action Level.

TABLE 3A-7
Summary of Pesticides/PCBs Data for JPL Monitoring Wells

Station ID:								MW-17-3	MW-17-4	MW-17-4	MW-18-3	MW-18-4	MW-19-3	MW-19-5	MW-21-3	MW-21-5	MW-24-2
QAQC Type:								N	N	DUP	N	N	N	N	N	N	N
Date Collected:								12/12/02	12/12/02	12/12/02	12/10/02	12/11/02	12/09/02	12/09/02	12/05/02	12/05/02	01/08/03
Analyte Type	**Method**	**Analyte**	**Units**	**CA Primary MCL**	**CA Secondary MCL**	**CA PHG**	**DHS Action Level**										
Pesticides/PCBs	EPA 508	2,4'-DDD	µg/L	--	--	--	--	0.05 UJ	0.05 UJ	0.05 UJ	0.05 UJ	0.05 UJ	0.05 UJ	0.05 UJ	0.05 U	0.05 U	0.05 UJ
Pesticides/PCBs	EPA 508	2,4'-DDE	µg/L	--	--	--	--	0.05 UJ	0.05 UJ	0.05 UJ	0.05 UJ	0.05 UJ	0.05 UJ	0.05 UJ	0.05 U	0.05 U	0.05 UJ
Pesticides/PCBs	EPA 508	2,4'-DDT	µg/L	--	--	--	--	0.02 UJ	0.02 UJ	0.02 UJ	0.02 UJ	0.02 UJ	0.02 UJ	0.02 UJ	0.02 U	0.02 U	0.02 UJ
Pesticides/PCBs	EPA 508	4,4-DDD	µg/L	--	--	--	--	0.02 UJ	0.02 UJ	0.02 UJ	0.02 UJ	0.02 UJ	0.02 UJ	0.02 UJ	0.02 U	0.02 U	0.02 UJ
Pesticides/PCBs	EPA 508	4,4-DDE	µg/L	--	--	--	--	0.01 UJ	0.01 UJ	0.01 UJ	0.01 UJ	0.01 UJ	0.01 UJ	0.01 UJ	0.01 U	0.01 U	0.01 UJ
Pesticides/PCBs	EPA 508	4,4-DDT	µg/L	--	--	--	--	0.02 UJ	0.02 UJ	0.02 UJ	0.02 UJ	0.02 UJ	0.02 UJ	0.02 UJ	0.02 U	0.02 U	0.02 UJ
Pesticides/PCBs	EPA 508	ALACHLOR	µg/L	2	--	4	--	0.1 UJ	0.1 UJ	0.1 UJ	0.1 UJ	0.1 UJ	0.1 UJ	0.1 UJ	0.1 U	0.1 U	0.1 UJ
Pesticides/PCBs	EPA 508	ALDRIN	µg/L	--	--	--	0.002	**0.05** UJ	**0.05 UJ**	**0.05 UJ**	**0.05 UJ**	**0.05 UJ**	**0.05 UJ**	**0.05 UJ**	**0.05 U**	**0.05 U**	**0.05 UJ**
Pesticides/PCBs	EPA 508	ALPHA-BHC	µg/L	--	--	--	0.015	**0.05** UJ	**0.05 UJ**	**0.05 UJ**	**0.05 UJ**	**0.05 UJ**	**0.05 UJ**	**0.05 UJ**	**0.05 U**	**0.05 U**	**0.05 UJ**
Pesticides/PCBs	EPA 508	BENFLURALIN (BENEFIN)	µg/L	--	--	--	--	0.1 UJ	0.1 UJ	0.1 UJ	0.1 UJ	0.1 UJ	0.1 UJ	0.1 UJ	0.1 U	0.1 U	0.1 UJ
Pesticides/PCBs	EPA 508	BETA-BHC	µg/L	--	--	--	0.025	**0.05** UJ	**0.05 UJ**	**0.05 UJ**	**0.05 UJ**	**0.05 UJ**	**0.05 UJ**	**0.05 UJ**	**0.05 U**	**0.05 U**	**0.05 UJ**
Pesticides/PCBs	EPA 508	CAPTAN	µg/L	--	--	--	1.5	0.1 UJ	0.1 UJ	0.1 UJ	0.1 UJ	0.1 UJ	0.1 UJ	0.1 UJ	0.1 U	0.1 U	0.1 UJ
Pesticides/PCBs	EPA 508	CARBOPHENOTHION	µg/L	--	--	--	--	0.05 UJ	0.05 UJ	0.05 UJ	0.05 UJ	0.05 UJ	0.05 UJ	0.05 UJ	0.05 U	0.05 U	0.05 UJ
Pesticides/PCBs	EPA 508	CHLORDANE	µg/L	0.1	--	0.03	--	0.05 UJ	0.05 UJ	0.05 UJ	0.05 UJ	0.05 UJ	0.05 UJ	0.05 UJ	0.05 U	0.05 U	0.05 UJ
Pesticides/PCBs	EPA 508	CHLOROTHALONIL	µg/L	--	--	--	--	0.05 UJ	0.05 UJ	0.05 UJ	0.05 UJ	0.05 UJ	0.05 UJ	0.05 UJ	0.05 U	0.05 U	0.05 UJ
Pesticides/PCBs	EPA 508	DELTA-BHC	µg/L	--	--	--	0.025	**0.05** UJ	**0.05 UJ**	**0.05 UJ**	**0.05 UJ**	**0.05 UJ**	**0.05 UJ**	**0.05 UJ**	**0.05 U**	**0.05 U**	**0.05 UJ**
Pesticides/PCBs	EPA 508	DICOFOL	µg/L	--	--	--	--	0.1 UJ	0.1 UJ	0.1 UJ	0.1 UJ	0.1 UJ	0.1 UJ	0.1 UJ	0.1 U	0.1 U	0.1 UJ
Pesticides/PCBs	EPA 508	DIELDRIN	µg/L	--	--	--	0.002	**0.02** UJ	**0.02 UJ**	**0.02 UJ**	**0.02 UJ**	**0.02 UJ**	**0.02 UJ**	**0.02 UJ**	**0.02 U**	**0.02 U**	**0.02 UJ**
Pesticides/PCBs	EPA 508	DMPA	µg/L	--	--	--	--	0.1 UJ	0.1 UJ	0.1 UJ	0.1 UJ	0.1 UJ	0.1 UJ	0.1 UJ	0.1 U	0.1 U	0.1 UJ
Pesticides/PCBs	EPA 508	ENDOSULFAN I	µg/L	--	--	--	--	0.02 UJ	0.02 UJ	0.02 UJ	0.02 UJ	0.02 UJ	0.02 UJ	0.02 UJ	0.02 U	0.02 U	0.02 UJ
Pesticides/PCBs	EPA 508	ENDOSULFAN II	µg/L	--	--	--	--	0.01 UJ	0.01 UJ	0.01 UJ	0.01 UJ	0.01 UJ	0.01 UJ	0.01 UJ	0.01 U	0.01 U	0.01 UJ
Pesticides/PCBs	EPA 508	ENDOSULFAN SULFATE	µg/L	--	--	--	--	0.05 UJ	0.05 UJ	0.05 UJ	0.05 UJ	0.05 UJ	0.05 UJ	0.05 UJ	0.05 U	0.05 U	0.05 UJ
Pesticides/PCBs	EPA 508	ENDRIN	µg/L	2	--	1.8	--	0.05 UJ	0.05 UJ	0.05 UJ	0.05 UJ	0.05 UJ	0.05 UJ	0.05 UJ	0.05 U	0.05 U	0.05 UJ
Pesticides/PCBs	EPA 508	ENDRIN ALDEHYDE	µg/L	--	--	--	--	0.05 UJ	0.05 UJ	0.05 UJ	0.05 UJ	0.05 UJ	0.05 UJ	0.05 UJ	0.05 U	0.05 U	0.05 UJ
Pesticides/PCBs	EPA 508	ENDRIN KETONE	µg/L	--	--	--	--	0.05 UJ	0.05 UJ	0.05 UJ	0.05 UJ	0.05 UJ	0.05 UJ	0.05 UJ	0.05 U	0.05 U	0.05 UJ
Pesticides/PCBs	EPA 508	GAMMA- BHC (LINDANE)	µg/L	0.2	--	0.032	--	0.05 UJ	0.05 UJ	0.05 UJ	0.05 UJ	0.05 UJ	0.05 UJ	0.05 UJ	0.05 U	0.05 U	0.05 UJ
Pesticides/PCBs	EPA 508	HEPTACHLOR	µg/L	0.01	--	0.008	--	0.01 UJ	0.01 UJ	0.01 UJ	0.01 UJ	0.01 UJ	0.01 UJ	0.01 UJ	0.01 U	0.01 U	0.01 UJ
Pesticides/PCBs	EPA 508	HEPTACHLOR EPOXIDE	µg/L	0.01	--	0.006	--	0.01 UJ	0.01 UJ	0.01 UJ	0.01 UJ	0.01 UJ	0.01 UJ	0.01 UJ	0.01 U	0.01 U	0.01 UJ
Pesticides/PCBs	EPA 508	HEXACHLOROBENZENE	µg/L	1	--	--	--	0.05 UJ	0.05 UJ	0.05 UJ	0.05 UJ	0.05 UJ	0.05 UJ	0.05 UJ	0.05 U	0.05 U	0.05 UJ
Pesticides/PCBs	EPA 508	METHOXYCHLOR	µg/L	30	--	30	--	0.05 UJ	0.05 UJ	0.05 UJ	0.05 UJ	0.05 UJ	0.05 UJ	0.05 UJ	0.05 U	0.05 U	0.05 UJ
Pesticides/PCBs	EPA 508	NITROFEN	µg/L	--	--	--	--	0.05 UJ	0.05 UJ	0.05 UJ	0.05 UJ	0.05 UJ	0.05 UJ	0.05 UJ	0.05 U	0.05 U	0.05 UJ
Pesticides/PCBs	EPA 508	PCB-1016	µg/L	--	--	--	--	0.5 UJ	0.5 UJ	0.5 UJ	0.5 UJ	0.5 UJ	0.5 UJ	0.5 UJ	0.5 U	0.5 U	0.5 UJ
Pesticides/PCBs	EPA 508	PCB-1221	µg/L	--	--	--	--	0.5 UJ	0.5 UJ	0.5 UJ	0.5 UJ	0.5 UJ	0.5 UJ	0.5 UJ	0.5 U	0.5 U	0.5 UJ
Pesticides/PCBs	EPA 508	PCB-1232	µg/L	--	--	--	--	0.5 UJ	0.5 UJ	0.5 UJ	0.5 UJ	0.5 UJ	0.5 UJ	0.5 UJ	0.5 U	0.5 U	0.5 UJ
Pesticides/PCBs	EPA 508	PCB-1242	µg/L	--	--	--	--	0.5 UJ	0.5 UJ	0.5 UJ	0.5 UJ	0.5 UJ	0.5 UJ	0.5 UJ	0.5 U	0.5 U	0.5 UJ
Pesticides/PCBs	EPA 508	PCB-1248	µg/L	--	--	--	--	0.5 UJ	0.5 UJ	0.5 UJ	0.5 UJ	0.5 UJ	0.5 UJ	0.5 UJ	0.5 U	0.5 U	0.5 UJ
Pesticides/PCBs	EPA 508	PCB-1254	µg/L	--	--	--	--	0.5 UJ	0.5 UJ	0.5 UJ	0.5 UJ	0.5 UJ	0.5 UJ	0.5 UJ	0.5 U	0.5 U	0.5 UJ
Pesticides/PCBs	EPA 508	PCB-1260	µg/L	--	--	--	--	0.5 UJ	0.5 UJ	0.5 UJ	0.5 UJ	0.5 UJ	0.5 UJ	0.5 UJ	0.5 U	0.5 U	0.5 UJ
Pesticides/PCBs	EPA 508	PCNB	µg/L	--	--	--	--	0.05 UJ	0.05 UJ	0.05 UJ	0.05 UJ	0.05 UJ	0.05 UJ	0.05 UJ	0.05 U	0.05 U	0.05 UJ
Pesticides/PCBs	EPA 508	PROPACHLOR	µg/L	--	--	--	--	0.1 UJ	0.1 UJ	0.1 UJ	0.1 UJ	0.28 J	0.1 UJ	0.1 UJ	0.1 U	0.1 U	0.1 UJ
Pesticides/PCBs	EPA 508	TOXAPHENE	µg/L	3	--	--	--	0.5 UJ	0.5 UJ	0.5 UJ	0.5 UJ	0.5 UJ	0.5 UJ	0.5 UJ	0.5 U	0.5 U	0.5 UJ

Notes:

N = Normal Environmental Sample
DUP = Field Duplicate Sample
"--" = Sample was not analyzed using this method.
J = Estimated value
U = Not detected at the listed reporting limit.
UJ = The compound or analyte was analyzed for but not detected. The sample detection limit is an estima
µg/L = micrograms per liter
XX = Bolding of value and qualifier means that the detection limit exceeds a CA Primary/Secondary MCL or DHS Action Level.
[ ] = Bolding and outlining of value and qualifier means that a detected value exceeds a CA Primary/Secor MCL or DHS Action Level.

TABLE 3A-8
Summary of Explosives Data for JPL Monitoring Wells

Station ID:								MW-3-3	MW-3-5	MW-4-1	MW-4-2	MW-4-5	MW-7	MW-8	MW-10	MW-12-3	MW-12-5	MW-14-2	MW-14-4	MW-16	MW-16
QAQC Type:								N	N	N	N	N	N	N	N	N	N	N	N	N	DUP
Date Collected:								12/20/02	02/24/03	12/27/02	12/27/02	01/02/03	01/16/03	01/17/03	01/17/03	01/03/03	01/07/03	12/17/02	12/18/02	01/16/03	01/16/03
Analyte Type	Method	Analyte	Units	CA Primary MCL	CA Secondary MCL	CA PHG	DHS Action Level														
Explosives	EPA 8330	1,3,5-TRINITROBENZENE (TNB)	µg/L	--	--	--	--	0.2 U	4 U	0.2 U	0.2 U	0.2 U	0.2 U	0.2 U	0.2 U	0.2 U	0.2 U	0.2 U	0.2 U	0.2 U	0.2 U
Explosives	EPA 8330	1,3-DINITROBENZENE (DNB)	µg/L	--	--	--	--	0.2 U	4 U	0.2 U	0.2 U	0.2 U	0.2 U	0.2 U	0.2 U	0.2 U	0.2 U	0.2 U	0.2 U	0.2 U	0.2 U
Explosives	EPA 8330	2,4,6-TRINITROTOLUENE (TNT)	µg/L	--	--	--	--	25.7	2 U	4.32	4.5	0.11 U	0.11 UJ	0.11 U	0.11 U	0.11 U	2.2	0.11 U	0.11 U	8.29 J	2.6 J
Explosives	EPA 8330	2,4-DINITROTOLUENE	µg/L	--	--	--	--	0.2 U	4 U	0.2 U	0.2 U	0.2 U	0.2 U	0.2 U	0.2 U	0.2 U	0.2 U	0.2 U	0.2 U	0.2 U	0.2 U
Explosives	EPA 8330	2,6-DINITROTOLUENE	µg/L	--	--	--	--	0.33 U	4 U	0.33 U	0.33 U	0.33 U	0.33 U	0.33 U	0.33 U	0.33 U	0.330 U	0.33 U	0.33 U	0.33 U	0.33 U
Explosives	EPA 8330	2-AMINO-4,6-DINITROTOLUENE	µg/L	--	--	--	--	0.21 U	2 U	0.21 U	0.21 U	0.21 U	0.21 U	0.21 U	0.21 U	0.21 U	0.210 U	0.21 U	0.21 U	0.21 U	0.21 U
Explosives	EPA 8330	2-NITROTOLUENE	µg/L	--	--	--	--	0.66 U	11 U	0.66 U	0.66 U	0.66 U	0.66 U	0.66 U	0.66 U	0.66 U	0.660 U	0.66 U	0.66 U	0.66 U	0.66 U
Explosives	EPA 8330	3-NITROTOLUENE	µg/L	--	--	--	--	0.3 U	6 U	0.3 U	0.3 U	0.3 U	0.3 U	0.3 U	0.3 U	0.3 U	0.3 U	0.3 U	0.3 U	0.3 U	0.3 U
Explosives	EPA 8330	4-AMINO-2,6-DINITROTOLUENE	µg/L	--	--	--	--	0.2 U	4 U	0.2 U	0.2 U	0.2 U	0.2 U	0.2 U	0.2 U	0.2 U	0.2 U	0.2 U	0.2 U	0.2 U	0.2 U
Explosives	EPA 8330	4-NITROTOLUENE	µg/L	--	--	--	--	0.66 U	11 U	0.66 U	0.66 U	0.66 U	0.66 U	0.66 U	0.66 U	0.66 U	0.660 U	0.66 U	0.66 U	0.66 U	0.66 U
Explosives	EPA 8330	HMX	µg/L	--	--	--	--	2.5	10 U	0.7	0.5 U	0.5 U	0.5 U	0.5 U	0.5 U	0.5 U	0.5 U	0.5 U	0.5 U	0.5 U	0.5 U
Explosives	EPA 8330	NITROBENZENE	µg/L	--	--	--	--	0.2 U	4 U	0.2 U	0.2 U	0.2 U	0.2 U	0.2 U	0.2 U	0.2 U	0.2 U	0.2 U	0.2 U	0.2 U	0.2 U
Explosives	EPA 8330	RDX	µg/L	--	--	--	--	27.3	4 U	5.83	3.1	0.2 U	0.2 U	0.2 U	0.2 U	0.66	3	0.2 U	0.2 U	2.1	1.3
Explosives	EPA 8330	TETRYL	µg/L	--	--	--	--	0.15 U	4.4 U	0.15 U	0.15 U	0.15 U	0.15 UJ	0.15 U	0.15 U	0.15 U	0.150 U	0.15 U	0.15 U	0.15 UJ	0.15 UJ

Notes:

N = Normal Environmental Sample
DUP = Field Duplicate Sample
"--" = Sample was not analyzed using this method.
J = Estimated value
U = Not detected at the listed reporting limit.
UJ = The compound or analyte was analyzed for but not detected. The sample detection limit is an estimated value.
µg/L = micrograms per liter
XX = Bolding of value and qualifier means that the detection limit exceeds a CA Primary/Secondary MCL or DHS Action Level.
[ ] = Bolding and outlining of value and qualifier means that a detected value exceeds a CA Primary/Secondary MCL or DHS Action Level.

TABLE 3A-8
Summary of Explosives Data for JPL Monitoring Wells

Station ID:								**MW-17-3**	**MW-17-4**	**MW-17-4**	**MW-18-3**	**MW-18-4**	**MW-19-3**	**MW-19-5**	**MW-21-3**	**MW-21-5**	**MW-24-2**
QAQC Type:								N	N	DUP	N	N	N	N	N	N	N
Date Collected:								12/12/02	12/13/02	12/13/02	12/10/02	12/11/02	12/06/02	12/09/02	12/04/02	12/05/02	01/08/03
Analyte Type	**Method**	**Analyte**	**Units**	**CA Primary MCL**	**CA Secondary MCL**	**CA PHG**	**DHS Action Level**										
Explosives	EPA 8330	1,3,5-TRINITROBENZENE (TNB)	µg/L	--	--	--	--	0.2 U	0.2 U	0.2 U	0.2 U	0.2 U	0.2 U	0.2 U	0.2 U	0.2 U	0.2 U
Explosives	EPA 8330	1,3-DINITROBENZENE (DNB)	µg/L	--	--	--	--	0.2 U	0.2 U	0.2 U	0.2 U	0.2 U	0.2 U	0.2 U	0.2 U	0.2 U	0.2 U
Explosives	EPA 8330	2,4,6-TRINITROTOLUENE (TNT)	µg/L	--	--	--	--	0.11 U	0.11 U	0.11 U	0.110 U	0.110 U	0.110 U	0.110 U	0.110 U	0.110 U	0.110 U
Explosives	EPA 8330	2,4-DINITROTOLUENE	µg/L	--	--	--	--	0.2 U	0.2 U	0.2 U	0.2 U	0.2 U	0.2 U	0.2 U	0.2 U	0.2 U	0.2 U
Explosives	EPA 8330	2,6-DINITROTOLUENE	µg/L	--	--	--	--	0.33 U	0.33 U	0.33 U	0.330 U	0.330 U	0.330 U	0.330 U	0.330 U	0.330 U	0.330 U
Explosives	EPA 8330	2-AMINO-4,6-DINITROTOLUENE	µg/L	--	--	--	--	0.21 U	0.21 U	0.21 U	0.210 U	0.210 U	0.210 U	0.210 U	0.210 U	0.210 U	0.210 U
Explosives	EPA 8330	2-NITROTOLUENE	µg/L	--	--	--	--	0.66 U	0.66 U	0.66 U	0.660 U	0.660 U	0.660 U	0.660 U	0.660 U	0.660 U	0.660 U
Explosives	EPA 8330	3-NITROTOLUENE	µg/L	--	--	--	--	0.3 U	0.3 U	0.3 U	0.3 U	0.3 U	0.3 U	0.3 U	0.3 U	0.3 U	0.3 U
Explosives	EPA 8330	4-AMINO-2,6-DINITROTOLUENE	µg/L	--	--	--	--	0.2 U	0.2 U	0.2 U	0.2 U	0.2 U	0.2 U	0.2 U	0.2 U	0.2 U	0.2 U
Explosives	EPA 8330	4-NITROTOLUENE	µg/L	--	--	--	--	0.66 U	0.66 U	0.66 U	0.660 U	0.660 U	0.660 U	0.660 U	0.660 U	0.660 U	0.660 U
Explosives	EPA 8330	HMX	µg/L	--	--	--	--	0.5 U	0.5 U	0.5 U	0.5 U	0.5 U	0.5 U	0.5 U	0.5 U	0.5 U	0.5 U
Explosives	EPA 8330	NITROBENZENE	µg/L	--	--	--	--	0.2 U	0.2 U	0.2 U	0.2 U	0.2 U	0.2 U	0.2 U	0.2 U	0.2 U	0.2 U
Explosives	EPA 8330	RDX	µg/L	--	--	--	--	0.2 U	0.2 U	0.2 U	0.2 U	0.2 U	0.2 U	0.2 U	0.2 U	0.2 U	0.2 U
Explosives	EPA 8330	TETRYL	µg/L	--	--	--	--	0.15 U	0.15 U	0.15 U	0.150 U	0.150 U	0.150 U	0.150 U	0.150 U	0.150 U	0.150 U

Notes:

N = Normal Environmental Sample
DUP = Field Duplicate Sample
"--" = Sample was not analyzed using this method.
J = Estimated value
U = Not detected at the listed reporting limit.
UJ = The compound or analyte was analyzed for but not detected. The sample detection limit is an estimated value
µg/L = micrograms per liter
XX = Bolding of value and qualifier means that the detection limit exceeds a CA Primary/Secondary MCL or DHS Action Level.
[ ] = Bolding and outlining of value and qualifier means that a detected value exceeds a CA Primary/Secondary MCL or DHS Action Level.

J

TABLE 3A-9

Summary of Nitrogen/Phosphorus Pesticides and Organophosphorus Pesticides Data for JPL Monitoring Wells

Station ID:								**MW-3-3**	**MW-4-2**	**MW-7**	**MW-12-3**	**MW-14-2**	**MW-16**	**MW-16**
QAQC Type:								N	N	N	N	N	N	DUP
Date Collected:								02/24/03	12/30/02	01/16/03	01/06/03	12/19/02	01/16/03	01/16/03
Analyte Type	**Method**	**Analyte**	**Units**	**CA Primary MCL**	**CA Secondary MCL**	**CA PHG**	**DHS Action Level**							
N&P Pesticides	EPA 507	ALACHLOR	µg/L	2	--	4	--	0.5 U	0.5 UJ	0.5 U	0.5 U	0.5 UR	0.5 U	0.5
N&P Pesticides	EPA 507	ATRAZINE	µg/L	1	--	0.15	--	0.5 U	0.5 U	0.5 U	0.5 U	0.5 UR	0.5 U	0.5
N&P Pesticides	EPA 507	BROMACIL	µg/L	--	--	--	--	0.5 U	0.5 UJ	0.5 U	0.5 U	0.5 UR	0.5 U	0.5
N&P Pesticides	EPA 507	BUTACHLOR	µg/L	--	--	--	--	0.38 U	0.38 U	0.38 U	0.38 U	0.38 UR	0.38 U	0.38
N&P Pesticides	EPA 507	DEMETON	µg/L	--	--	--	--	0.5 U	0.5 UJ	0.5 UJ	0.5 U	--	0.5 UJ	0.5
N&P Pesticides	EPA 507	DIAZINON	µg/L	--	--	--	6	0.25 U	0.25 U	0.25 UJ	0.25 U	--	0.25 UJ	0.25
N&P Pesticides	EPA 507	DIMETHOATE	µg/L	--	--	--	1	0.5 U	0.5 UJ	0.5 UJ	0.5 U	--	0.5 UJ	0.5
N&P Pesticides	EPA 507	DISULFOTON	µg/L	--	--	--	--	0.5 U	0.5 U	0.5 U	0.5 U	--	0.5 U	0.5
N&P Pesticides	EPA 507	METOLACHLOR	µg/L	--	--	--	--	0.5 U	0.5 UJ	0.5 U	0.5 U	0.5 UR	0.5 U	0.5
N&P Pesticides	EPA 507	METRIBUZIN	µg/L	--	--	--	--	0.5 U	0.5 U	0.5 U	0.5 U	0.5 UR	0.5 U	0.5
N&P Pesticides	EPA 507	MEVINPHOS	µg/L	--	--	--	--	0.5 U	0.5 UJ	0.5 U	0.5 U	--	0.5 U	0.5
N&P Pesticides	EPA 507	MOLINATE	µg/L	20	--	--	--	0.5 U	0.5 U	0.5 U	0.5 U	0.5 UR	0.5 U	0.5
N&P Pesticides	EPA 507	PROMETON	µg/L	--	--	--	--	0.5 U	0.5 U	0.5 UJ	0.5 U	0.5 UR	0.5 UJ	0.5
N&P Pesticides	EPA 507	PROMETRYN	µg/L	--	--	--	--	0.5 U	0.5 U	0.5 U	0.5 U	0.5 UR	0.5 U	0.5
N&P Pesticides	EPA 507	PRONAMIDE	µg/L	--	--	--	--	0.5 U	0.5 U	0.5 U	0.5 U	0.5 UR	0.5 U	0.5
N&P Pesticides	EPA 507	SIMAZINE	µg/L	4	--	4	--	0.5 U	0.5 U	0.5 U	0.5 U	0.5 UR	0.5 U	0.5
N&P Pesticides	EPA 507	SIMETRYN	µg/L	--	--	--	--	0.5 U	0.5 U	0.5 U	0.5 U	0.5 UR	0.5 U	0.5
N&P Pesticides	EPA 507	TERBUTRYN	µg/L	--	--	--	--	0.5 U	0.5 U	0.5 U	0.5 U	0.5 UR	0.5 U	0.5
N&P Pesticides	EPA 507	THIOBENCARB	µg/L	70	1	70	--	0.5 U	0.5 U	0.5 U	0.5 U	0.5 UR	0.5 U	0.5
O-P Pesticides	EPA 8141A	BOLSTAR	µg/L	--	--	--	--	0.1 U	0.1 U	0.1 U	0.1 U	0.1 UR	0.1 U	0.1
O-P Pesticides	EPA 8141A	CHLORPYRIFOS	µg/L	--	--	--	--	0.05 U	0.05 U	0.05 U	0.05 U	0.05 UR	0.05 U	0.05
O-P Pesticides	EPA 8141A	COUMAPHOS	µg/L	--	--	--	--	0.2 U	0.2 U	0.2 U	0.2 U	0.2 UR	0.2 U	0.2
O-P Pesticides	EPA 8141A	DEMETON	µg/L	--	--	--	--	0.2 U	0.2 U	0.2 UJ	0.2 UJ	0.2 UR	0.2 UJ	0.2
O-P Pesticides	EPA 8141A	DIAZINON	µg/L	--	--	--	6	0.05 U	0.05 U	0.05 UJ	0.05 U	0.05 UR	0.05 UJ	0.05
O-P Pesticides	EPA 8141A	DICHLORVOS	µg/L	--	--	--	--	0.2 U	0.2 U	0.2 UJ	0.2 U	0.2 UR	0.2 UJ	0.2
O-P Pesticides	EPA 8141A	DIMETHOATE	µg/L	--	--	--	1	0.1 U	0.1 UJ	0.1 UJ	0.1 UJ	0.1 UR	0.1 UJ	0.1
O-P Pesticides	EPA 8141A	DISULFOTON	µg/L	--	--	--	--	0.1 U	0.1 U	0.1 U	0.1 U	0.1 UR	0.1 U	0.1
O-P Pesticides	EPA 8141A	EPN	µg/L	--	--	--	--	0.1 U	0.1 U	0.1 UJ	0.1 U	0.1 UR	0.1 UJ	0.1
O-P Pesticides	EPA 8141A	EPTC	µg/L	--	--	--	--	0.1 U	0.1 U	0.1 U	0.1 U	0.1 UR	0.1 U	0.1
O-P Pesticides	EPA 8141A	ETHION	µg/L	--	--	--	--	0.1 U	0.1 U	0.1 U	0.1 U	0.1 UR	0.1 U	0.1
O-P Pesticides	EPA 8141A	ETHOPROP	µg/L	--	--	--	--	0.1 U	0.1 U	0.1 UJ	0.1 U	0.1 UR	0.1 UJ	0.1
O-P Pesticides	EPA 8141A	FENSULFOTHION	µg/L	--	--	--	--	0.5 U	0.5 U	0.5 UJ	0.5 UJ	0.5 UR	0.5 UJ	0.5
O-P Pesticides	EPA 8141A	FENTHION	µg/L	--	--	--	--	0.1 U	0.1 U	0.1 UJ	0.1 U	0.1 UR	0.1 UJ	0.1
O-P Pesticides	EPA 8141A	GUTHION	µg/L	--	--	--	--	1 U	1 U	1 U	1 U	1 UR	1 U	1
O-P Pesticides	EPA 8141A	MALATHION	µg/L	--	--	--	--	0.1 U	0.1 U	0.1 U	0.1 U	0.1 UR	0.1 U	0.1
O-P Pesticides	EPA 8141A	MERPHOS	µg/L	--	--	--	--	0.1 U	0.1 U	0.1 U	0.1 U	0.1 UR	0.1 U	0.1
O-P Pesticides	EPA 8141A	METHYL PARATHION	µg/L	--	--	--	--	0.1 U	0.1 U	0.1 U	0.1 U	0.1 UR	0.1 U	0.1
O-P Pesticides	EPA 8141A	MEVINPHOS	µg/L	--	--	--	--	0.7 U	0.7 U	0.7 UJ	0.7 U	0.7 UR	0.7 UJ	0.7
O-P Pesticides	EPA 8141A	NALED	µg/L	--	--	--	--	0.5 U	0.5 U	0.5 UJ	0.5 U	0.5 UR	0.5 UJ	0.5
O-P Pesticides	EPA 8141A	PARATHION	µg/L	--	--	--	--	0.1 U	0.1 U	0.1 U	0.1 U	0.1 UR	0.1 U	0.1
O-P Pesticides	EPA 8141A	PHORATE	µg/L	--	--	--	--	0.1 U	0.1 U	0.1 UJ	0.1 U	0.1 UR	0.1 UJ	0.1

TABLE 3A-9

Summary of Nitrogen/Phosphorus Pesticides and Organophosphorus Pesticides Data for JPL Monitoring Wells

Station ID:								**MW-3-3**	**MW-4-2**	**MW-7**	**MW-12-3**	**MW-14-2**	**MW-16**	**MW-16**
QAQC Type:								N	N	N	N	N	N	DUP
Date Collected:								02/24/03	12/30/02	01/16/03	01/06/03	12/19/02	01/16/03	01/16/03
Analyte Type	**Method**	**Analyte**	**Units**	**CA Primary MCL**	**CA Secondary MCL**	**CA PHG**	**DHS Action Level**							
O-P Pesticides	EPA 8141A	PROWL	µg/L	--	--	--	--	0.1 U	0.1 U	0.1 UJ	0.1 U	0.1 UR	0.1 UJ	0.1
O-P Pesticides	EPA 8141A	RONNEL	µg/L	--	--	--	--	0.1 U	0.1 U	0.1 U	0.1 U	0.1 UR	0.1 U	0.1
O-P Pesticides	EPA 8141A	S,S,S-TRIBUTYLPHOSPHOROTRITHIOATE	µg/L	--	--	--	--	0.1 U	0.1 U	0.1 U	0.1 U	0.1 UR	0.1 U	0.1
O-P Pesticides	EPA 8141A	STIROPHOS	µg/L	--	--	--	--	0.1 U	0.1 U	0.1 U	0.1 UJ	0.1 UR	0.1 U	0.1
O-P Pesticides	EPA 8141A	SULFOTEPP	µg/L	--	--	--	--	0.1 U	0.1 U	0.1 U	0.1 U	0.1 UR	0.1 U	0.1
O-P Pesticides	EPA 8141A	TOKUTHION	µg/L	--	--	--	--	0.1 U	0.1 U	0.1 U	0.1 U	0.1 UR	0.1 U	0.1
O-P Pesticides	EPA 8141A	TRICHLORONATE	µg/L	--	--	--	--	0.1 U	0.1 U	0.1 U	0.1 U	0.1 UR	0.1 U	0.1
O-P Pesticides	EPA 8141A	TRIFLURALIN	µg/L	--	--	--	--	0.1 U	0.1 U	0.1 UJ	0.1 UJ	0.1 UR	0.1 UJ	0.1

Notes:

N = Normal Environmental Sample
DUP = Field Duplicate Sample
"--" = Sample was not analyzed using this method.
U = Not detected at the listed reporting limit.
UJ = The compound or analyte was analyzed for but not detected. The sample detection limit is an estimated value.
UR = Not detected at the listed reporting limit. Quality control indicates the data are not usable.
µg/L = micrograms per liter
XX = Bolding of value and qualifier means that the detection limit exceeds a CA Primary/Secondary MCL or DHS Action Level.
[ ] = Bolding and outlining of value and qualifier means that a detected value exceeds a CA Primary/Secondary MCL or DHS Action Level.

TABLE 3A-9

Summary of Nitrogen/Phosphorus Pesticides and Organophosphorus Pesticides Data for JPL Monitoring Wells

Station ID:
QAQC Type:
Date Collected:

Analyte Type	Method	Analyte	Units	CA Primary MCL	CA Secondary MCL	CA PHG	DHS Action Level	
N&P Pesticides	EPA 507	ALACHLOR	µg/L	2	--	4	--	U
N&P Pesticides	EPA 507	ATRAZINE	µg/L	1	--	0.15	--	U
N&P Pesticides	EPA 507	BROMACIL	µg/L	--	--	--	--	U
N&P Pesticides	EPA 507	BUTACHLOR	µg/L	--	--	--	--	U
N&P Pesticides	EPA 507	DEMETON	µg/L	--	--	--	--	UJ
N&P Pesticides	EPA 507	DIAZINON	µg/L	--	--	--	6	UJ
N&P Pesticides	EPA 507	DIMETHOATE	µg/L	--	--	--	1	UJ
N&P Pesticides	EPA 507	DISULFOTON	µg/L	--	--	--	--	U
N&P Pesticides	EPA 507	METOLACHLOR	µg/L	--	--	--	--	U
N&P Pesticides	EPA 507	METRIBUZIN	µg/L	--	--	--	--	U
N&P Pesticides	EPA 507	MEVINPHOS	µg/L	--	--	--	--	U
N&P Pesticides	EPA 507	MOLINATE	µg/L	20	--	--	--	U
N&P Pesticides	EPA 507	PROMETON	µg/L	--	--	--	--	UJ
N&P Pesticides	EPA 507	PROMETRYN	µg/L	--	--	--	--	U
N&P Pesticides	EPA 507	PRONAMIDE	µg/L	--	--	--	--	U
N&P Pesticides	EPA 507	SIMAZINE	µg/L	4	--	4	--	U
N&P Pesticides	EPA 507	SIMETRYN	µg/L	--	--	--	--	U
N&P Pesticides	EPA 507	TERBUTRYN	µg/L	--	--	--	--	U
N&P Pesticides	EPA 507	THIOBENCARB	µg/L	70	1	70	--	U
O-P Pesticides	EPA 8141A	BOLSTAR	µg/L	--	--	--	--	U
O-P Pesticides	EPA 8141A	CHLORPYRIFOS	µg/L	--	--	--	--	U
O-P Pesticides	EPA 8141A	COUMAPHOS	µg/L	--	--	--	--	U
O-P Pesticides	EPA 8141A	DEMETON	µg/L	--	--	--	--	UJ
O-P Pesticides	EPA 8141A	DIAZINON	µg/L	--	--	--	6	UJ
O-P Pesticides	EPA 8141A	DICHLORVOS	µg/L	--	--	--	--	UJ
O-P Pesticides	EPA 8141A	DIMETHOATE	µg/L	--	--	--	1	UJ
O-P Pesticides	EPA 8141A	DISULFOTON	µg/L	--	--	--	--	U
O-P Pesticides	EPA 8141A	EPN	µg/L	--	--	--	--	UJ
O-P Pesticides	EPA 8141A	EPTC	µg/L	--	--	--	--	U
O-P Pesticides	EPA 8141A	ETHION	µg/L	--	--	--	--	U
O-P Pesticides	EPA 8141A	ETHOPROP	µg/L	--	--	--	--	UJ
O-P Pesticides	EPA 8141A	FENSULFOTHION	µg/L	--	--	--	--	UJ
O-P Pesticides	EPA 8141A	FENTHION	µg/L	--	--	--	--	UJ
O-P Pesticides	EPA 8141A	GUTHION	µg/L	--	--	--	--	U
O-P Pesticides	EPA 8141A	MALATHION	µg/L	--	--	--	--	U
O-P Pesticides	EPA 8141A	MERPHOS	µg/L	--	--	--	--	U
O-P Pesticides	EPA 8141A	METHYL PARATHION	µg/L	--	--	--	--	U
O-P Pesticides	EPA 8141A	MEVINPHOS	µg/L	--	--	--	--	UJ
O-P Pesticides	EPA 8141A	NALED	µg/L	--	--	--	--	UJ
O-P Pesticides	EPA 8141A	PARATHION	µg/L	--	--	--	--	U
O-P Pesticides	EPA 8141A	PHORATE	µg/L	--	--	--	--	UJ

TABLE 3A-9

Summary of Nitrogen/Phosphorus Pesticides and Organophosphorus Pesticides Data for JPL Monitoring Wells

Station ID:
QAQC Type:
Date Collected:

Analyte Type	Method	Analyte	Units	CA Primary MCL	CA Secondary MCL	CA PHG	DHS Action Level	
O-P Pesticides	EPA 8141A	PROWL	µg/L	--	--	--	--	UJ
O-P Pesticides	EPA 8141A	RONNEL	µg/L	--	--	--	--	U
O-P Pesticides	EPA 8141A	S,S,S-TRIBUTYLPHOSPHOROTRITHIOATE	µg/L	--	--	--	--	U
O-P Pesticides	EPA 8141A	STIROPHOS	µg/L	--	--	--	--	U
O-P Pesticides	EPA 8141A	SULFOTEPP	µg/L	--	--	--	--	U
O-P Pesticides	EPA 8141A	TOKUTHION	µg/L	--	--	--	--	U
O-P Pesticides	EPA 8141A	TRICHLORONATE	µg/L	--	--	--	--	U
O-P Pesticides	EPA 8141A	TRIFLURALIN	µg/L	--	--	--	--	UJ

Notes:

N = Normal Environmental Sample
DUP = Field Duplicate Sample
"--" = Sample was not analyzed using this method.
U = Not detected at the listed reporting limit.
UJ = The compound or analyte was analyzed for but not detected. The sample detection limit is an estimated value.
UR = Not detected at the listed reporting limit. Quality control indicates the data are not usable.
µg/L = micrograms per liter
XX = Bolding of value and qualifier means that the detection limit exceeds a CA Primary/Secondary MCL or DHS Action Level.
[ ] = Bolding and outlining of value and qualifier means that a detected value exceeds a CA Primary/Secondary MCL or DHS Action Level.

TABLE 3A-10

Summary of Carbamates, Chloropicrin, Glyphosate, Endothall, Formaldehyde, Ethylene Glycol, Paraquat, Diquat, 1,2,3-Trichloropropane, EDB, and DBCP Data for JPL Monitoring Wells

Station ID:								MW-3-3	MW-3-3	MW-3-3	MW-3-3	MW-4-2	MW-4-2	MW-4-2	MW-4-2	MW-7	MW-10	MW-10	MW-12-3	MW-12-3	MW-12-3
QAQC Type:								N	N	N	N	N	N	N	N	N	N	N	N	N	N
Date Collected:								12/20/02	01/14/03	02/24/03	02/27/03	12/31/02	01/02/03	01/15/03	02/27/03	01/16/03	01/16/03	01/17/03	01/03/03	01/06/03	01/15/03
Analyte Type	**Method**	**Analyte**	**Units**	**CA Primary MCL**	**CA Secondary MCL**	**CA PHG**	**DHS Action Level**														
Aldehydes	EPA 8315A	2-BUTANONE (METHYL ETHYL KE	UG/ML	--	--	--	--	--	--	--	0.03 U	--	--	--	0.03 U	0.03 U	--	--	--	--	--
Aldehydes	EPA 8315A	ACETALDEHYDE	UG/ML	--	--	--	--	--	--	--	0.003 U	--	--	--	0.003 U	0.003 UJ	--	--	--	--	--
Aldehydes	EPA 8315A	ACETONE	UG/ML	--	--	--	--	--	--	--	0.01 U	--	--	--	0.01 U	0.01 U	--	--	--	--	--
Aldehydes	EPA 8315A	ACROLEIN	UG/ML	--	--	--	--	--	--	--	0.01 U	--	--	--	0.01 U	0.01 U	--	--	--	--	--
Aldehydes	EPA 8315A	BENZALDEHYDE	UG/ML	--	--	--	--	--	--	--	0.03 U	--	--	--	0.03 U	0.03 U	--	--	--	--	--
Aldehydes	EPA 8315A	BUTYRALDEHYDE	UG/ML	--	--	--	--	--	--	--	0.03 U	--	--	--	0.03 U	0.03 UJ	--	--	--	--	--
Aldehydes	EPA 8315A	CROTONALDEHYDE	UG/ML	--	--	--	--	--	--	--	0.03 U	--	--	--	0.03 U	0.03 U	--	--	--	--	--
Aldehydes	EPA 8315A	FORMALDEHYDE	UG/ML	--	--	--	--	--	--	--	0.004 U	--	--	--	0.004 U	0.004 UJ	--	--	--	--	--
Aldehydes	EPA 8315A	HEXANALDEHYDE	UG/ML	--	--	--	--	--	--	--	0.03 U	--	--	--	0.03 U	0.03 U	--	--	--	--	--
Aldehydes	EPA 8315A	M-TOLUALDEHYDE	UG/ML	--	--	--	--	--	--	--	0.03 U	--	--	--	0.03 U	0.03 U	--	--	--	--	--
Aldehydes	EPA 8315A	METHACROLEIN	UG/ML	--	--	--	--	--	--	--	0.03 U	--	--	--	0.03 U	0.03 U	--	--	--	--	--
Aldehydes	EPA 8315A	PROPIONALDEHYDE	UG/ML	--	--	--	--	--	--	--	0.03 U	--	--	--	0.03 U	0.03 UJ	--	--	--	--	--
Aldehydes	EPA 8315A	VALERALDEHYDE	UG/ML	--	--	--	--	--	--	--	0.03 U	--	--	--	0.03 U	0.03 U	--	--	--	--	--
Carbamates	EPA 531.1	3-HYDROXYCARBOFURAN	µg/L	--	--	--	--	--	--	3 U	--	3 U	--	--	--	3 U	--	--	3 UR	--	--
Carbamates	EPA 531.1	ALDICARB	µg/L	--	--	--	7	--	--	3 U	--	3 U	--	--	--	3 U	--	--	3 UR	--	--
Carbamates	EPA 531.1	ALDICARB SULFONE	µg/L	--	--	--	--	--	--	4 U	--	4 U	--	--	--	4 U	--	--	4 UR	--	--
Carbamates	EPA 531.1	ALDICARB SULFOXIDE	µg/L	--	--	--	--	--	--	3 U	--	3 U	--	--	--	3 U	--	--	3 UR	--	--
Carbamates	EPA 531.1	CARBARYL	µg/L	--	--	--	700	--	--	5 U	--	5 U	--	--	--	5 U	--	--	5 UR	--	--
Carbamates	EPA 531.1	CARBOFURAN	µg/L	18	--	1.7	--	--	--	5 U	--	5 U	--	--	--	5 U	--	--	5 UR	--	--
Carbamates	EPA 531.1	METHIOCARB	µg/L	--	--	--	--	--	--	5 U	--	5 U	--	--	--	5 U	--	--	5 UR	--	--
Carbamates	EPA 531.1	METHOMYL	µg/L	--	--	--	--	--	--	2 U	--	2 U	--	--	--	2 U	--	--	2 UR	--	--
Carbamates	EPA 531.1	OXAMYL	µg/L	50	--	50	--	--	--	5 U	--	5 U	--	--	--	5 U	--	--	5 UR	--	--
Carbamates	EPA 531.1	PROPOXUR	µg/L	--	--	--	--	--	--	5 U	--	5 U	--	--	--	5 U	--	--	5 UR	--	--
CHLOROPICRIN	EPA 551.1	1,1,1-TRICHLORO-2-PROPANONE	µg/L	--	--	--	--	--	--	1 U	--	1 U	--	--	--	1 U	--	--	--	1 U	--
CHLOROPICRIN	EPA 551.1	1,1-DICHLOROPROPANONE	µg/L	--	--	--	--	--	--	1 U	--	1 U	--	--	--	1 U	--	--	--	1 U	--
CHLOROPICRIN	EPA 551.1	BROMOCHLOROACETONITRILE	µg/L	--	--	--	--	--	--	5 U	--	5 U	--	--	--	5 U	--	--	--	5 U	--
CHLOROPICRIN	EPA 551.1	BROMODICHLOROMETHANE	µg/L	--	--	--	--	--	--	0.5 U	--	0.5 U	--	--	--	0.5 U	--	--	--	0.5 U	--
CHLOROPICRIN	EPA 551.1	BROMOFORM	µg/L	--	--	--	--	--	--	0.5 U	--	0.5 U	--	--	--	0.5 U	--	--	--	0.5 U	--
CHLOROPICRIN	EPA 551.1	CHLORODIBROMOMETHANE (THI	µg/L	--	--	--	--	--	--	0.5 U	--	0.5 U	--	--	--	0.5 U	--	--	--	0.5 U	--
CHLOROPICRIN	EPA 551.1	CHLOROFORM	µg/L	100	--	--	--	--	--	0.5 U	--	0.5 U	--	--	--	26	--	--	--	5.8	--
CHLOROPICRIN	EPA 551.1	CHLOROPICRIN	µg/L	--	--	--	56	--	--	1 U	--	1 U	--	--	--	1 U	--	--	--	1 U	--
CHLOROPICRIN	EPA 551.1	DIBROMOACETONITRILE	µg/L	--	--	--	--	--	--	2 U	--	2 U	--	--	--	2 U	--	--	--	2 U	--
CHLOROPICRIN	EPA 551.1	DICHLOROACETONITRILE	µg/L	--	--	--	--	--	--	1 U	--	1 U	--	--	--	1 U	--	--	--	1 U	--
CHLOROPICRIN	EPA 551.1	TOTAL TRIHALOMETHANES	µg/L	100	--	--	--	--	--	0.5 U	--	0.5 U	--	--	--	27	--	--	--	5.8	--
CHLOROPICRIN	EPA 551.1	TRICHLOROACETONITRILE	µg/L	--	--	--	--	--	--	2 U	--	2 U	--	--	--	2 U	--	--	--	2 U	--
Endothall	EPA 548	ENDOTHALL	µg/L	100	--	580	--	--	--	**500 U**	--	--	5 U	--	--	5 U	--	--	--	5 U	--
Ethylene Glycol	EPA 8015M	ETHYLENE GLYCOL	mg/L	--	--	--	--	5 U	--	--	--	5 U	--	--	--	5 U	--	--	5 U	--	--
Glyphosate	EPA 547	GLYPHOSATE	µg/L	700	--	1000	--	--	--	10 U	--	--	10 U	--	--	10 U	--	--	--	10 U	--
Paraquat & Diquat	EPA 549.1	DIQUAT	µg/L	20	--	15	--	0.4 U	--	--	--	0.4 UJ	--	--	--	0.4 U	--	--	0.4 UR	--	--
Paraquat & Diquat	EPA 549.1	PARAQUAT	µg/L	--	--	--	--	0.4 U	--	--	--	0.4 UJ	--	--	--	0.4 U	--	--	0.4 UR	--	--
TCP, EDB, DBCP	EPA 504.1	1,2,3-TRICHLOROPROPANE	µg/L	--	--	--	0.005	--	0.005 U	--	--	--	--	0.005 U	--	0.005 U	0.005 U	--	--	--	**0.024**
TCP, EDB, DBCP	EPA 504.1	1,2-DIBROMOETHANE (ETHYLENE	µg/L	0.05	--	--	--	--	--	0.02 U	--	0.02 U	--	--	--	0.02 U	--	0.02 U	0.02 U	--	--
TCP, EDB, DBCP	EPA 504.1	DIBROMOCHLOROPROPANE (DB	µg/L	0.2	--	0.0017	--	--	--	0.02 U	--	0.02 U	--	--	--	0.02 U	--	0.02 U	0.02 U	--	--

Notes:

N = Normal Environmental Sample
DUP = Field Duplicate Sample
"--" = Sample was not analyzed using this method.
U = Not detected at the listed reporting limit.
UJ = The compound or analyte was analyzed for but not detected. The sample detection limit is an estimated value.
UR = Not detected at the listed reporting limit. Quality control indicates the data are not usable.
µg/L = micrograms per liter
µg/mL = micrograms per milliliter
XX = Bolding of value and qualifier means that the detection limit exceeds a CA Primary/Secondary MCL or DHS Action Level.

TABLE 3A-10

Summary of Carbamates, Chloropicrin, Glyphosate, Endothall, Formaldehyde, Ethylene Glycol, Paraquat, Diquat, 1,2,3-Trichloropropane, EDB, and DBCP Data for JPL Monitoring Wells

Station ID:								**MW-3-3**	**MW-3-3**	**MW-3-3**	**MW-3-3**	**MW-4-2**	**MW-4-2**	**MW-4-2**	**MW-4-2**	**MW-7**	**MW-10**	**MW-10**	**MW-12-3**	**MW-12-3**	**MW-12-3**
QAQC Type:								N	N	N	N	N	N	N	N	N	N	N	N	N	N
Date Collected:								12/20/02	01/14/03	02/24/03	02/27/03	12/31/02	01/02/03	01/15/03	02/27/03	01/16/03	01/16/03	01/17/03	01/03/03	01/06/03	01/15/03
Analyte Type	**Method**	**Analyte**	**Units**	**CA Primary MCL**	**CA Secondary MCL**	**CA PHG**	**DHS Action Level**														

= Bolding and outlining of value and qualifier means that a detected value exceeds a CA Primary/Secondary MCL or DHS Action Level.

TABLE 3A-10

Summary of Carbamates, Chloropicrin, Glyphosate, Endothall, Formaldehyde, Ethylene Glycol, Paraquat, Diquat, 1,2,3-Trichloropropane, EDB, and DBCP Data for JPL Monitoring Wells

Station ID:								MW-12-3	MW-14-2	MW-14-2	MW-14-2	MW-14-2	MW-16	MW-16	MW-17-4	MW-17-4	MW-18-4	MW-18-4	MW-19-3	MW-19-3
QAQC Type:								N	N	N	N	N	N	DUP	N	N	N	N	N	N
Date Collected:								02/27/03	12/17/02	12/26/02	01/14/03	02/27/03	01/16/03	01/16/03	12/16/02	01/13/03	12/11/02	01/20/03	12/06/02	01/13/03
Analyte Type	**Method**	**Analyte**	**Units**	**CA Primary MCL**	**CA Secondary MCL**	**CA PHG**	**DHS Action Level**													
Aldehydes	EPA 8315A	2-BUTANONE (METHYL ETHYL KE	UG/ML	--	--	--	--	0.03 U	--	--	--	0.03 U	0.03 U	0.03 U	--	--	--	--	--	--
Aldehydes	EPA 8315A	ACETALDEHYDE	UG/ML	--	--	--	--	0.003 U	--	--	--	0.003 U	0.003 UJ	0.003 UJ	--	--	--	--	--	--
Aldehydes	EPA 8315A	ACETONE	UG/ML	--	--	--	--	0.01 U	--	--	--	0.01 U	0.01 U	0.01 U	--	--	--	--	--	--
Aldehydes	EPA 8315A	ACROLEIN	UG/ML	--	--	--	--	0.01 U	--	--	--	0.01 U	0.01 U	0.01 U	--	--	--	--	--	--
Aldehydes	EPA 8315A	BENZALDEHYDE	UG/ML	--	--	--	--	0.03 U	--	--	--	0.03 U	0.03 U	0.03 U	--	--	--	--	--	--
Aldehydes	EPA 8315A	BUTYRALDEHYDE	UG/ML	--	--	--	--	0.03 U	--	--	--	0.03 U	0.03 UJ	0.03 UJ	--	--	--	--	--	--
Aldehydes	EPA 8315A	CROTONALDEHYDE	UG/ML	--	--	--	--	0.03 U	--	--	--	0.03 U	0.03 U	0.03 U	--	--	--	--	--	--
Aldehydes	EPA 8315A	FORMALDEHYDE	UG/ML	--	--	--	--	0.004 U	--	--	--	0.004 U	0.004 UJ	0.004 UJ	--	--	--	--	--	--
Aldehydes	EPA 8315A	HEXANALDEHYDE	UG/ML	--	--	--	--	0.03 U	--	--	--	0.03 U	0.03 U	0.03 U	--	--	--	--	--	--
Aldehydes	EPA 8315A	M-TOLUALDEHYDE	UG/ML	--	--	--	--	0.03 U	--	--	--	0.03 U	0.03 U	0.03 U	--	--	--	--	--	--
Aldehydes	EPA 8315A	METHACROLEIN	UG/ML	--	--	--	--	0.03 U	--	--	--	0.03 U	0.03 U	0.03 U	--	--	--	--	--	--
Aldehydes	EPA 8315A	PROPIONALDEHYDE	UG/ML	--	--	--	--	0.03 U	--	--	--	0.03 U	0.03 UJ	0.03 UJ	--	--	--	--	--	--
Aldehydes	EPA 8315A	VALERALDEHYDE	UG/ML	--	--	--	--	0.03 U	--	--	--	0.03 U	0.03 U	0.03 U	--	--	--	--	--	--
Carbamates	EPA 531.1	3-HYDROXYCARBOFURAN	µg/L	--	--	--	--	--	3 UR	--	--	--	3 U	3 U	--	--	--	--	--	--
Carbamates	EPA 531.1	ALDICARB	µg/L	--	--	--	7	--	3 UR	--	--	--	3 U	3 U	--	--	--	--	--	--
Carbamates	EPA 531.1	ALDICARB SULFONE	µg/L	--	--	--	--	--	4 UR	--	--	--	4 U	4 U	--	--	--	--	--	--
Carbamates	EPA 531.1	ALDICARB SULFOXIDE	µg/L	--	--	--	--	--	3 UR	--	--	--	3 U	3 U	--	--	--	--	--	--
Carbamates	EPA 531.1	CARBARYL	µg/L	--	--	--	700	--	5 UR	--	--	--	5 U	5 U	--	--	--	--	--	--
Carbamates	EPA 531.1	CARBOFURAN	µg/L	18	--	1.7	--	--	5 UR	--	--	--	5 U	5 U	--	--	--	--	--	--
Carbamates	EPA 531.1	METHIOCARB	µg/L	--	--	--	--	--	5 UR	--	--	--	5 U	5 U	--	--	--	--	--	--
Carbamates	EPA 531.1	METHOMYL	µg/L	--	--	--	--	--	2 UR	--	--	--	2 U	2 U	--	--	--	--	--	--
Carbamates	EPA 531.1	OXAMYL	µg/L	50	--	50	--	--	5 UR	--	--	--	5 U	5 U	--	--	--	--	--	--
Carbamates	EPA 531.1	PROPOXUR	µg/L	--	--	--	--	--	5 UR	--	--	--	5 U	5 U	--	--	--	--	--	--
CHLOROPICRIN	EPA 551.1	1,1,1-TRICHLORO-2-PROPANONE	µg/L	--	--	--	--	--	--	0.32 U	--	--	1 U	1 U	--	--	--	--	--	--
CHLOROPICRIN	EPA 551.1	1,1-DICHLOROPROPANONE	µg/L	--	--	--	--	--	--	0.21 U	--	--	1 U	1 U	--	--	--	--	--	--
CHLOROPICRIN	EPA 551.1	BROMOCHLOROACETONITRILE	µg/L	--	--	--	--	--	--	1.8 U	--	--	5 U	5 U	--	--	--	--	--	--
CHLOROPICRIN	EPA 551.1	BROMODICHLOROMETHANE	µg/L	--	--	--	--	--	--	0.27 U	--	--	0.5 U	0.5 U	--	--	--	--	--	--
CHLOROPICRIN	EPA 551.1	BROMOFORM	µg/L	--	--	--	--	--	--	0.26 U	--	--	0.5 U	0.5 U	--	--	--	--	--	--
CHLOROPICRIN	EPA 551.1	CHLORODIBROMOMETHANE (THI	µg/L	--	--	--	--	--	--	0.21 U	--	--	0.5 U	0.5 U	--	--	--	--	--	--
CHLOROPICRIN	EPA 551.1	CHLOROFORM	µg/L	100	--	--	--	--	--	1.8 J	--	--	1.3	1.1	--	--	--	--	--	--
CHLOROPICRIN	EPA 551.1	CHLOROPICRIN	µg/L	--	--	--	56	--	--	0.34 U	--	--	1 U	1 U	--	--	--	--	--	--
CHLOROPICRIN	EPA 551.1	DIBROMOACETONITRILE	µg/L	--	--	--	--	--	--	0.49 U	--	--	2 U	2 U	--	--	--	--	--	--
CHLOROPICRIN	EPA 551.1	DICHLOROACETONITRILE	µg/L	--	--	--	--	--	--	0.21 U	--	--	1 U	1 U	--	--	--	--	--	--
CHLOROPICRIN	EPA 551.1	TOTAL TRIHALOMETHANES	µg/L	100	--	--	--	--	--	1.9 J	--	--	1.3	1.2	--	--	--	--	--	--
CHLOROPICRIN	EPA 551.1	TRICHLOROACETONITRILE	µg/L	--	--	--	--	--	--	0.81 U	--	--	2 U	2 U	--	--	--	--	--	--
Endothall	EPA 548	ENDOTHALL	µg/L	100	--	580	--	--	5 UR	--	--	--	5 U	5 U	--	--	--	--	--	--
Ethylene Glycol	EPA 8015M	ETHYLENE GLYCOL	mg/L	--	--	--	--	--	5 U	--	--	--	5 U	5 U	--	--	--	--	--	--
Glyphosate	EPA 547	GLYPHOSATE	µg/L	700	--	1000	--	--	10 UR	--	--	--	10 U	10 U	--	--	--	--	--	--
Paraquat & Diquat	EPA 549.1	DIQUAT	µg/L	20	--	15	--	--	0.4 UR	--	--	--	0.4 U	0.4 U	--	--	--	--	--	--
Paraquat & Diquat	EPA 549.1	PARAQUAT	µg/L	--	--	--	--	--	0.4 UR	--	--	--	0.4 U	0.4 U	--	--	--	--	--	--
TCP, EDB, DBCP	EPA 504.1	1,2,3-TRICHLOROPROPANE	µg/L	--	--	--	0.005	--	--	--	0.005 U	--	0.005 U	--	--	0.005 U	--	**0.071**	--	0.005 U
TCP, EDB, DBCP	EPA 504.1	1,2-DIBROMOETHANE (ETHYLENE	µg/L	0.05	--	--	--	--	0.02 U	--	--	--	0.02 U	0.02 U	0.02 U	--	0.02 U	--	0.02 U	--
TCP, EDB, DBCP	EPA 504.1	DIBROMOCHLOROPROPANE (DB	µg/L	0.2	--	0.0017	--	--	0.02 U	--	--	--	0.02 U	0.02 U	0.02 U	--	0.02 UJ	--	0.02 U	--

Notes:

N = Normal Environmental Sample
DUP = Field Duplicate Sample
"--" = Sample was not analyzed using this method.
U = Not detected at the listed reporting limit.
UJ = The compound or analyte was analyzed for but not detected. The sample detection limit is an estimated value.
UR = Not detected at the listed reporting limit. Quality control indicates the data are not usable.
µg/L = micrograms per liter
µg/mL = micrograms per milliliter
XX = Bolding of value and qualifier means that the detection limit exceeds a CA Primary/Secondary MCL or DHS Action Level.

TABLE 3A-10

Summary of Carbamates, Chloropicrin, Glyphosate, Endothall, Formaldehyde, Ethylene Glycol, Paraquat, Diquat, 1,2,3-Trichloropropane, EDB, and DBCP Data for JPL Monitoring Wells

Station ID:								**MW-12-3**	**MW-14-2**	**MW-14-2**	**MW-14-2**	**MW-14-2**	**MW-16**	**MW-16**	**MW-17-4**	**MW-17-4**	**MW-18-4**	**MW-18-4**	**MW-19-3**	**MW-19-3**
QAQC Type:								N	N	N	N	N	N	DUP	N	N	N	N	N	N
Date Collected:								02/27/03	12/17/02	12/26/02	01/14/03	02/27/03	01/16/03	01/16/03	12/16/02	01/13/03	12/11/02	01/20/03	12/06/02	01/13/03
Analyte Type	**Method**	**Analyte**	**Units**	**CA Primary MCL**	**CA Secondary MCL**	**CA PHG**	**DHS Action Level**													

= Bolding and outlining of value and qualifier means that a detected value exceeds a CA Primary/Secondary MCL or DHS Action Level.

TABLE 3A-10

Summary of Carbamates, Chloropicrin, Glyphosate, Endothall, Formaldehyde, Ethylene Glycol, Paraquat, Diquat, 1,2,3-Trichloropropane, EDB, and DBCP Data for JPL Monitoring Wells

Station ID:								**MW-21-5**	**MW-21-5**	**MW-24-2**	**MW-24-2**
QAQC Type:								N	N	N	N
Date Collected:								12/05/02	01/13/03	01/09/03	01/15/03
Analyte Type	**Method**	**Analyte**	**Units**	**CA Primary MCL**	**CA Secondary MCL**	**CA PHG**	**DHS Action Level**				
Aldehydes	EPA 8315A	2-BUTANONE (METHYL ETHYL KE	UG/ML	--	--	--	--	--	--	--	--
Aldehydes	EPA 8315A	ACETALDEHYDE	UG/ML	--	--	--	--	--	--	--	--
Aldehydes	EPA 8315A	ACETONE	UG/ML	--	--	--	--	--	--	--	--
Aldehydes	EPA 8315A	ACROLEIN	UG/ML	--	--	--	--	--	--	--	--
Aldehydes	EPA 8315A	BENZALDEHYDE	UG/ML	--	--	--	--	--	--	--	--
Aldehydes	EPA 8315A	BUTYRALDEHYDE	UG/ML	--	--	--	--	--	--	--	--
Aldehydes	EPA 8315A	CROTONALDEHYDE	UG/ML	--	--	--	--	--	--	--	--
Aldehydes	EPA 8315A	FORMALDEHYDE	UG/ML	--	--	--	--	--	--	--	--
Aldehydes	EPA 8315A	HEXANALDEHYDE	UG/ML	--	--	--	--	--	--	--	--
Aldehydes	EPA 8315A	M-TOLUALDEHYDE	UG/ML	--	--	--	--	--	--	--	--
Aldehydes	EPA 8315A	METHACROLEIN	UG/ML	--	--	--	--	--	--	--	--
Aldehydes	EPA 8315A	PROPIONALDEHYDE	UG/ML	--	--	--	--	--	--	--	--
Aldehydes	EPA 8315A	VALERALDEHYDE	UG/ML	--	--	--	--	--	--	--	--
Carbamates	EPA 531.1	3-HYDROXYCARBOFURAN	µg/L	--	--	--	--	--	--	--	--
Carbamates	EPA 531.1	ALDICARB	µg/L	--	--	--	7	--	--	--	--
Carbamates	EPA 531.1	ALDICARB SULFONE	µg/L	--	--	--	--	--	--	--	--
Carbamates	EPA 531.1	ALDICARB SULFOXIDE	µg/L	--	--	--	--	--	--	--	--
Carbamates	EPA 531.1	CARBARYL	µg/L	--	--	--	700	--	--	--	--
Carbamates	EPA 531.1	CARBOFURAN	µg/L	18	--	1.7	--	--	--	--	--
Carbamates	EPA 531.1	METHIOCARB	µg/L	--	--	--	--	--	--	--	--
Carbamates	EPA 531.1	METHOMYL	µg/L	--	--	--	--	--	--	--	--
Carbamates	EPA 531.1	OXAMYL	µg/L	50	--	50	--	--	--	--	--
Carbamates	EPA 531.1	PROPOXUR	µg/L	--	--	--	--	--	--	--	--
CHLOROPICRIN	EPA 551.1	1,1,1-TRICHLORO-2-PROPANONE	µg/L	--	--	--	--	--	--	--	--
CHLOROPICRIN	EPA 551.1	1,1-DICHLOROPROPANONE	µg/L	--	--	--	--	--	--	--	--
CHLOROPICRIN	EPA 551.1	BROMOCHLOROACETONITRILE	µg/L	--	--	--	--	--	--	--	--
CHLOROPICRIN	EPA 551.1	BROMODICHLOROMETHANE	µg/L	--	--	--	--	--	--	--	--
CHLOROPICRIN	EPA 551.1	BROMOFORM	µg/L	--	--	--	--	--	--	--	--
CHLOROPICRIN	EPA 551.1	CHLORODIBROMOMETHANE (THI	µg/L	--	--	--	--	--	--	--	--
CHLOROPICRIN	EPA 551.1	CHLOROFORM	µg/L	100	--	--	--	--	--	--	--
CHLOROPICRIN	EPA 551.1	CHLOROPICRIN	µg/L	--	--	--	56	--	--	--	--
CHLOROPICRIN	EPA 551.1	DIBROMOACETONITRILE	µg/L	--	--	--	--	--	--	--	--
CHLOROPICRIN	EPA 551.1	DICHLOROACETONITRILE	µg/L	--	--	--	--	--	--	--	--
CHLOROPICRIN	EPA 551.1	TOTAL TRIHALOMETHANES	µg/L	100	--	--	--	--	--	--	--
CHLOROPICRIN	EPA 551.1	TRICHLOROACETONITRILE	µg/L	--	--	--	--	--	--	--	--
Endothall	EPA 548	ENDOTHALL	µg/L	100	--	580	--	--	--	--	--
Ethylene Glycol	EPA 8015M	ETHYLENE GLYCOL	mg/L	--	--	--	--	--	--	--	--
Glyphosate	EPA 547	GLYPHOSATE	µg/L	700	--	1000	--	--	--	--	--
Paraquat & Diquat	EPA 549.1	DIQUAT	µg/L	20	--	15	--	--	--	--	--
Paraquat & Diquat	EPA 549.1	PARAQUAT	µg/L	--	--	--	--	--	--	--	--
TCP, EDB, DBCP	EPA 504.1	1,2,3-TRICHLOROPROPANE	µg/L	--	--	--	0.005	--	0.005 U	--	0.005 U
TCP, EDB, DBCP	EPA 504.1	1,2-DIBROMOETHANE (ETHYLENE	µg/L	0.05	--	--	--	0.02 U	--	0.02 U	--
TCP, EDB, DBCP	EPA 504.1	DIBROMOCHLOROPROPANE (DB	µg/L	0.2	--	0.0017	--	0.02 U	--	0.02 U	--

Notes:

N = Normal Environmental Sample
DUP = Field Duplicate Sample
"--" = Sample was not analyzed using this method.
U = Not detected at the listed reporting limit.
UJ = The compound or analyte was analyzed for but not detected. The sample detection limit is an estimated value.
UR = Not detected at the listed reporting limit. Quality control indicates the data are not usable.
µg/L = micrograms per liter
µg/mL = micrograms per milliliter
XX = Bolding of value and qualifier means that the detection limit exceeds a CA Primary/Secondary MCL or DHS Action Level.

TABLE 3A-10

Summary of Carbamates, Chloropicrin, Glyphosate, Endothall, Formaldehyde, Ethylene Glycol, Paraquat, Diquat, 1,2,3-Trichloropropane, EDB, and DBCP Data for JPL Monitoring Wells

Station ID:								**MW-21-5**	**MW-21-5**	**MW-24-2**	**MW-24-2**
QAQC Type:								N	N	N	N
Date Collected:								12/05/02	01/13/03	01/09/03	01/15/03
Analyte Type	**Method**	**Analyte**	**Units**	**CA Primary MCL**	**CA Secondary MCL**	**CA PHG**	**DHS Action Level**				

= Bolding and outlining of value and qualifier means that a detected value exceeds a CA Primary/Secondary MCL or DHS Action Level.

TABLE 3A-11

Summary of Chlorophenoxy Herbicides Data for JPL Monitoring Wells

Station ID:								MW-3-3	MW-4-2	MW-7	MW-12-3	MW-14-2	MW-16	MW-16
QAQC Type:								N	N	N	N	N	N	DUP
Date Collected:								12/20/02	12/31/02	01/16/03	01/03/03	12/17/02	01/16/03	01/16/03
Analyte Type	**Method**	**Analyte**	**Units**	**CA Primary MCL**	**CA Secondary MCL**	**CA PHG**	**DHS Action Level**							
Herbicides	EPA 8151A	2,4,5-T	µg/L	--	--	--	--	0.23 U	0.22 UJ	0.22 UJ	0.22 UJ	0.23 UJ	0.22 UJ	0.22 UJ
Herbicides	EPA 8151A	2,4,5-TP	µg/L	50	--	--	--	0.1 U	0.1 U	0.096 U	0.1 U	0.1 U	0.096 U	0.096 U
Herbicides	EPA 8151A	2,4-D	µg/L	70	--	70	--	0.5 U	0.48 U	0.48 UJ	0.48 U	0.5 U	0.48 UJ	0.48 UJ
Herbicides	EPA 8151A	3,5-DICHLOROBENZOIC ACID	µg/L	--	--	--	--	--	0.48 U	--	--	0.5 U	--	--
Herbicides	EPA 8151A	4-NITROPHENOL	µg/L	--	--	--	--	--	0.48 U	--	--	0.5 U	--	--
Herbicides	EPA 8151A	ACIFLUORFEN	µg/L	--	--	--	--	--	0.96 U	--	--	1 U	--	--
Herbicides	EPA 8151A	BENTAZON	µg/L	18	--	200	--	0.5 U	0.48 U	0.48 U	0.48 U	0.5 U	0.48 U	0.48 U
Herbicides	EPA 8151A	CHLORAMBEN	µg/L	--	--	--	--	--	0.48 U	--	--	0.5 U	--	--
Herbicides	EPA 8151A	DACTHAL	µg/L	--	--	--	--	0.17 U	0.16 U	0.16 U	0.16 U	0.17 U	0.16 U	0.16 U
Herbicides	EPA 8151A	DALAPON	µg/L	200	--	790	--	1 U	0.96 U	0.96 U	0.96 U	1 U	0.96 U	0.96 U
Herbicides	EPA 8151A	DICAMBA	µg/L	--	--	--	--	0.1 U	0.1 U	0.096 U	0.1 U	0.1 U	0.096 U	0.096 U
Herbicides	EPA 8151A	DICHLOROPROP	µg/L	--	--	--	--	0.5 U	0.48 U	0.48 U	0.48 U	0.5 U	0.48 U	0.48 U
Herbicides	EPA 8151A	DINOSEB	µg/L	7	--	14	--	0.3 U	0.29 U	0.29 U	0.29 U	0.3 UJ	0.29 U	0.29 U
Herbicides	EPA 8151A	MCPA	µg/L	--	--	--	--	100 U	96 U	96 UJ	96 U	100 U	96 UJ	96 UJ
Herbicides	EPA 8151A	MCPP	µg/L	--	--	--	--	100 U	96 U	96 UJ	96 U	100 U	96 UJ	96 UJ
Herbicides	EPA 8151A	PENTACHLOROPHENOL	µg/L	1	--	0.4	--	0.1 U	0.1 U	0.096 U	0.1 U	0.1 U	0.096 U	0.096 U
Herbicides	EPA 8151A	PICLORAM	µg/L	500	--	500	--	0.21 U	0.2 U	0.2 U	0.2 U	0.21 U	0.2 U	0.2 U

Notes:

N = Normal Environmental Sample
DUP = Field Duplicate Sample
"--" = Sample was not analyzed using this method.
U = Not detected at the listed reporting limit.
UJ = The compound or analyte was analyzed for but not detected. The sample detection limit is an estimated value.
µg/L = micrograms per liter
XX = Bolding of value and qualifier means that the detection limit exceeds a CA Primary/Secondary MCL or DHS Action Level.
[ ] = Bolding and outlining of value and qualifier means that a detected value exceeds a CA Primary/Secondary MCL or DHS Action Level.

TABLE 3A-12

Summary of Dissolved Metals, Cyanide, and Hexavalent Chromium Data for JPL Monitoring Wells

Station ID:								MW-3-3	MW-3-3	MW-3-5	MW-3-5	MW-4-1	MW-4-1	MW-4-1	MW-4-2	MW-4-2	MW-4-2	MW-4-5	MW-4-5	MW-4-5	MW-7	MW-8
QAQC Type:								N	N	N	N	N	N	N	N	N	N	N	N	N	N	N
Date Collected:								12/20/02	02/24/03	02/24/03	02/27/03	12/27/02	12/30/02	01/02/03	12/27/02	12/30/02	01/02/03	12/30/02	01/02/03	01/10/03	01/16/03	01/17/03
Analyte Type	**Method**	**Analyte**	**Units**	**CA Primary MCL**	**CA Secondary MCL**	**CA PHG**	**DHS Action Level**															
Chromium (VI)	EPA 218.6	CHROMIUM (VI)	mg/L	--	--	0.0002	--	0.0002 U	--	--	0.0002 U	--	--	0.0002 U	--	--	0.0002 U	--	0.0002 U	--	0.0025	0.0002 U
Cyanide	EPA 335.2/335.3	CYANIDE	mg/L	0.15	--	0.15	--	--	0.021 U	0.021 U	--	0.024 U	--	--	0.024 U	--	--	--	--	0.024 U	0.024 U	0.024 U
Mercury	EPA/ML 245.1	MERCURY	µg/L	2	--	1.2	--	--	0.2 U	--	0.2 U	--	0.1 J	--	--	0.1 J	--	0.078 J	--	--	0.2 U	0.2 U
Metals	EPA 200.8	ALUMINUM	µg/L	1000	200	600	--	--	50 U	--	12 J	--	2.2 J	--	--	1.4 J	--	1.6 J	--	--	50 U	50 U
Metals	EPA 200.8	ANTIMONY	µg/L	6	--	20	--	--	0.5 U	--	0.1 J	--	0.7	--	--	0.2	--	0.2 J	--	--	0.4	1.8
Metals	EPA 200.8	ARSENIC	µg/L	50	--	--	--	--	1.4	--	0.5	--	1.2	--	--	1	--	0.9	--	--	0.6	1
Metals	EPA 200.8	BARIUM	µg/L	1000	--	--	--	--	73.9	--	41.4	--	108	--	--	106	--	15.7	--	--	52.9	52
Metals	EPA 200.8	BERYLLIUM	µg/L	4	--	--	--	--	0.2 U	--	0.2 U	--	0.2 U	--	--	0.2 U	--	0.2 U	--	--	0.2 U	0.2 U
Metals	EPA 200.8	BORON	µg/L	--	--	--	1000	--	154	--	9.2	--	57 J	--	--	59.2 J	--	188	--	--	78.2 J	122
Metals	EPA 200.8	CADMIUM	µg/L	5	--	0.07	--	--	0.2 U	--	0.2 U	--	0.2 U	--	--	0.2 U	--	0.2 U	--	--	0.2 U	0.2 U
Metals	EPA 200.8	CALCIUM	µg/L	--	--	--	--	--	29200	--	14600	--	94600 J	--	--	96000 J	--	17700	--	--	51700 J	52600 J
Metals	EPA 200.8	CHROMIUM	µg/L	50	--	--	--	--	2.4	--	4.1	--	3.7	--	--	4	--	1.8	--	--	6.4	0.5
Metals	EPA 200.8	COBALT	µg/L	--	--	--	--	--	0.2 U	--	0.2 U	--	0.1 J	--	--	0.095 J	--	0.055 J	--	--	0.071 J	0.079 J
Metals	EPA 200.8	COPPER	µg/L	--	1000	170	1300	--	4	--	3	--	1.4	--	--	1.3	--	1 U	--	--	1	2.7
Metals	EPA 200.8	IRON	µg/L	--	300	--	--	--	25 U	--	**983**	--	201	--	--	197	--	49.9	--	--	25 U	25 U
Metals	EPA 200.8	LEAD	µg/L	--	--	2	15	--	0.3	--	1.1	--	0.2	--	--	0.1 J	--	0.063 J	--	--	0.064 J	0.1 J
Metals	EPA 200.8	MAGNESIUM	µg/L	--	--	--	--	--	13600	--	2570	--	35700	--	--	36300	--	11400	--	--	16500	17100
Metals	EPA 200.8	MANGANESE	µg/L	--	50	--	500	--	34.1	--	49.7	--	3.6	--	--	3.6	--	**85.2**	--	--	0.1 J	0.2 J
Metals	EPA 200.8	NICKEL	µg/L	100	--	12	--	--	10 U	--	1.1 J	--	2.8 J	--	--	2.7 J	--	1.2 J	--	--	1 J	1.2 J
Metals	EPA 200.8	POTASSIUM	µg/L	--	--	--	--	--	3020	--	2340	--	2920	--	--	2920	--	2070	--	--	2670	2780
Metals	EPA 200.8	SELENIUM	µg/L	50	--	--	--	--	0.3	--	0.2 U	--	1.7	--	--	1.9	--	0.6	--	--	0.7	0.7
Metals	EPA 200.8	SILVER	µg/L	--	100	--	--	--	0.2 U	--	0.2 U	--	0.2 U	--	--	0.2 U	--	0.2 U	--	--	0.2 UJ	0.2 UJ
Metals	EPA 200.8	SODIUM	µg/L	--	--	--	--	--	47800	--	14500	--	40500	--	--	41300	--	41900	--	--	19400	18200
Metals	EPA 200.8	THALLIUM	µg/L	2	--	0.1	--	--	0.2 U	--	0.2 U	--	0.2 J	--	--	0.053 J	--	0.2 U	--	--	0.2 U	0.037 J
Metals	EPA 200.8	VANADIUM	µg/L	--	--	--	50	--	1.2	--	1.4	--	6.2	--	--	6.1	--	1.3	--	--	3	2.9
Metals	EPA 200.8	ZINC	µg/L	--	5000	--	--	--	50 U	--	80.7	--	5.2 J	--	--	4.9 J	--	50 U	--	--	16.6 J	19.7 J

Notes:

N = Normal Environmental Sample
DUP = Field Duplicate Sample
"--" = Sample was not analyzed using this method.
E = Analyte concentration is above calibration range
J = Estimated value
U = Not detected at the listed reporting limit.
UJ = The compound or analyte was analyzed for but not detected. The sample detection limit is an estimated value.
µg/L = micrograms per liter
mg/L = milligrams per liter
XX = Bolding of value and qualifier means that the detection limit exceeds a CA Primary/Secondary MCL or DHS Action Level.
[ ] = Bolding and outlining of value and qualifier means that a detected value exceeds a CA Primary/Secondary MCL or DHS Action Level.

TABLE 3A-12

Summary of Dissolved Metals, Cyanide, and Hexavalent Chromium Data for JPL Monitoring Wells

Station ID:								MW-10	MW-12-3	MW-12-3	MW-12-5	MW-12-5	MW-14-2	MW-14-2	MW-14-4	MW-14-4	MW-16	MW-16	MW-17-3	MW-17-4	MW-17-4	MW-17-4
QAQC Type:								N	N	N	N	N	N	N	N	N	N	DUP	N	N	N	N
Date Collected:								01/17/03	01/06/03	01/07/03	01/06/03	01/07/03	12/17/02	12/19/02	12/18/02	12/19/02	01/16/03	01/16/03	12/12/02	12/12/02	12/13/02	12/16/02
Analyte Type	**Method**	**Analyte**	**Units**	**CA Primary MCL**	**CA Secondary MCL**	**CA PHG**	**DHS Action Level**															
Chromium (VI)	EPA 218.6	CHROMIUM (VI)	mg/L	--	--	0.0002	--	0.00066	--	0.0001 U	--	0.0001 U	0.0001 U	--	0.0025	--	0.0002 U	0.0002 U	0.0001 U	--	0.0001 U	--
Cyanide	EPA 335.2/335.3	CYANIDE	mg/L	0.15	--	0.15	--	0.024 U	0.024 U	--	--	0.024 U	0.02 U	--	0.024 U	--	0.024 U	0.024 U	0.024 U	--	--	0.024
Mercury	EPA/ML 245.1	MERCURY	µg/L	2	--	1.2	--	0.2 U	0.2 U	--	0.2 U	--	--	0.1 U	--	0.082 U	0.2 U	0.2 U	0.082 J	0.076 J	--	--
Metals	EPA 200.8	ALUMINUM	µg/L	1000	200	600	--	50 U	1.2 J	--	2.4 J	--	--	3.1 U	--	1.6 U	50 U	50 U	50 U	1.2 J	--	--
Metals	EPA 200.8	ANTIMONY	µg/L	6	--	20	--	0.5	0.2 J	--	0.2 U	--	--	0.2 U	--	0.2 U	0.2	0.2 J	0.2 U	0.2 U	--	--
Metals	EPA 200.8	ARSENIC	µg/L	50	--	--	--	0.5	0.7	--	0.6	--	--	0.5 U	--	0.8	1.2	1.1	2.1	2.8	--	--
Metals	EPA 200.8	BARIUM	µg/L	1000	--	--	--	170	45.4	--	108	--	--	104 U	--	91.5 U	82.5	77.3	44.9	31.9	--	--
Metals	EPA 200.8	BERYLLIUM	µg/L	4	--	--	--	0.2 U	0.2 U	--	0.2 U	--	--	0.5 U	--	0.7	0.2 U	0.2 U	0.9	1.8	--	--
Metals	EPA 200.8	BORON	µg/L	--	--	--	1000	41.1 J	182	--	174	--	--	64.7 U	--	95.7 J	53.5 J	53.2 J	118	248	--	--
Metals	EPA 200.8	CADMIUM	µg/L	5	--	0.07	--	0.2 U	0.049 J	--	0.046 J	--	--	0.2 U	--	0.2 U	0.2 U	0.2 U	0.2 U	0.2 U	--	--
Metals	EPA 200.8	CALCIUM	µg/L	--	--	--	--	141000 J	48200 J	--	18400	--	--	142000 U	--	51000 U	54900 J	52700 J	35300	22500	--	--
Metals	EPA 200.8	CHROMIUM	µg/L	50	--	--	--	4.5	3.9	--	1.2	--	--	3.5 U	--	4.4	2	2.4	2.8	1.7	--	--
Metals	EPA 200.8	COBALT	µg/L	--	--	--	--	0.2 J	0.057 J	--	0.2 U	--	--	0.2 U	--	0.071 U	0.076 J	0.08 J	0.046 J	0.05 J	--	--
Metals	EPA 200.8	COPPER	µg/L	--	1000	170	1300	2.6	0.8 J	--	1.1	--	--	1.6 U	--	0.7 U	2	1 U	0.9 J	0.7 J	--	--
Metals	EPA 200.8	IRON	µg/L	--	300	--	--	25 U	116	--	45.5	--	--	25 U	--	25 U	25 U	25 U	25 U	25 U	--	--
Metals	EPA 200.8	LEAD	µg/L	--	--	2	15	0.3	0.09 J	--	0.2	--	--	0.079 J	--	0.2 U	0.1 J	0.2 U	0.1 J	0.2 U	--	--
Metals	EPA 200.8	MAGNESIUM	µg/L	--	--	--	--	46700	16400	--	334	--	--	49100 U	--	19200 U	19700	20100	19000	7970	--	--
Metals	EPA 200.8	MANGANESE	µg/L	--	50	--	500	0.4	2.9	--	0.1 J	--	--	0.5 U	--	1.3	0.4	0.4	5.5	8.6	--	--
Metals	EPA 200.8	NICKEL	µg/L	100	--	12	--	5.7 J	1 J	--	0.7 J	--	--	3 U	--	1.4 U	4.1 J	4.3 J	0.7 J	0.5 J	--	--
Metals	EPA 200.8	POTASSIUM	µg/L	--	--	--	--	3240	2950	--	3720	--	--	2580 U	--	2140 U	2620	2620	2330	2010	--	--
Metals	EPA 200.8	SELENIUM	µg/L	50	--	--	--	1.1	0.5	--	0.3	--	--	0.6 U	--	0.5 U	1.1	1	0.2 U	0.2 U	--	--
Metals	EPA 200.8	SILVER	µg/L	--	100	--	--	0.024 J	0.2 U	--	0.2 U	--	--	0.2 U	--	0.2 U	0.2 UJ	0.2 UJ	0.2 U	0.2 U	--	--
Metals	EPA 200.8	SODIUM	µg/L	--	--	--	--	33300	24200	--	25700	--	--	33400 U	--	29500 U	26300	26600	23600	43200	--	--
Metals	EPA 200.8	THALLIUM	µg/L	2	--	0.1	--	0.2 U	0.2 U	--	0.2 U	--	--	0.2 U	--	0.2 U	0.2 U	0.2 U	0.2 U	0.2 U	--	--
Metals	EPA 200.8	VANADIUM	µg/L	--	--	--	50	5	2.8	--	0.8	--	--	6.4 U	--	11.8	6.2	6.3	11.5	6.9	--	--
Metals	EPA 200.8	ZINC	µg/L	--	5000	--	--	20.1 J	9.2 J	--	4.6 J	--	--	6 U	--	3.9 U	22 J	17 J	4 J	50 U	--	--

Notes:

N = Normal Environmental Sample
DUP = Field Duplicate Sample
"--" = Sample was not analyzed using this method.
E = Analyte concentration is above calibration range
J = Estimated value
U = Not detected at the listed reporting limit.
UJ = The compound or analyte was analyzed for but not detected. The sample detection limit is an estimatec
µg/L = micrograms per liter
mg/L = milligrams per liter
XX = Bolding of value and qualifier means that the detection limit exceeds a CA Primary/Secondary MCL or DHS Action Level.
[ ] = Bolding and outlining of value and qualifier means that a detected value exceeds a CA Primary/Seconda MCL or DHS Action Level.

J

TABLE 3A-12

Summary of Dissolved Metals, Cyanide, and Hexavalent Chromium Data for JPL Monitoring Wells

Station ID:								MW-17-4	MW-17-4	MW-18-3	MW-18-4	MW-18-4	MW-19-3	MW-19-3	MW-19-5	MW-21-3	MW-21-3	MW-21-5	MW-21-5	MW-24-2	MW-24-2
QAQC Type:								DUP	DUP	N	N	N	N	N	N	N	N	N	N	N	N
Date Collected:								12/12/02	12/13/02	12/10/02	12/11/02	02/27/03	12/06/02	12/09/02	12/09/02	12/04/02	12/05/02	12/05/02	12/06/02	01/08/03	01/09/03
Analyte Type	**Method**	**Analyte**	**Units**	**CA Primary MCL**	**CA Secondary MCL**	**CA PHG**	**DHS Action Level**														
Chromium (VI)	EPA 218.6	CHROMIUM (VI)	mg/L	--	--	0.0002	--	--	0.0001 U	0.0027	0.00085	--	0.00049	--	0.0001 U	0.00079	--	--	0.0022	--	0.0002 U
Cyanide	EPA 335.2/335.3	CYANIDE	mg/L	0.15	--	0.15	--	U --	--	0.024 U	0.024 U	0.021 U	0.024 U	--	0.024 U	0.024 U	--	--	0.024 U	--	0.024 U
Mercury	EPA/ML 245.1	MERCURY	µg/L	2	--	1.2	--	0.086 J	--	0.087 J	0.066 U	--	--	0.059 J	0.058 J	--	0.059 J	0.2 U	--	0.2 U	--
Metals	EPA 200.8	ALUMINUM	µg/L	1000	200	600	--	50 U	--	50 U	50 U	--	--	50 U	50 U	--	5.9 J	173	--	1.3 J	--
Metals	EPA 200.8	ANTIMONY	µg/L	6	--	20	--	0.2 U	--	0.2 U	0.2 U	--	--	0.2 U	0.2 U	--	0.2 U	0.2 U	--	0.091 J	--
Metals	EPA 200.8	ARSENIC	µg/L	50	--	--	--	2.8	--	1.5	1	--	--	1	0.5	--	0.7	1	--	2	--
Metals	EPA 200.8	BARIUM	µg/L	1000	--	--	--	41.8	--	48.6	47	--	--	194	54.5	--	175	122	--	72.5	--
Metals	EPA 200.8	BERYLLIUM	µg/L	4	--	--	--	1.8	--	1.3	1	--	--	0.6	0.6	--	0.4	0.7	--	0.2 U	--
Metals	EPA 200.8	BORON	µg/L	--	--	--	1000	236	--	174	139	--	--	84.9 J	86 J	--	54.6 J	90.5 J	--	205	--
Metals	EPA 200.8	CADMIUM	µg/L	5	--	0.07	--	0.2 U	--	0.2 U	0.2 U	--	--	0.2 U	0.2 U	--	0.2 U	0.2 U	--	0.2 U	--
Metals	EPA 200.8	CALCIUM	µg/L	--	--	--	--	21600	--	57500 J	43400	--	--	131000 J	49700	--	132000	95700	--	38700	--
Metals	EPA 200.8	CHROMIUM	µg/L	50	--	--	--	1.5	--	7.2	3.2	--	--	4.1	2.5	--	4.2	9.2	--	2.8	--
Metals	EPA 200.8	COBALT	µg/L	--	--	--	--	0.2 U	--	0.06 J	0.044 J	--	--	0.1 J	0.043 J	--	0.2 J	0.3	--	0.045 J	--
Metals	EPA 200.8	COPPER	µg/L	--	1000	170	1300	0.7 J	--	0.8 J	0.7 U	--	--	1.3	1.4	--	1	1.4	--	0.7 J	--
Metals	EPA 200.8	IRON	µg/L	--	300	--	--	25 U	--	25 U	25 U	--	--	25 U	25 U	--	**396**	**1650**	--	90.4	--
Metals	EPA 200.8	LEAD	µg/L	--	--	2	15	0.2 U	--	0.058 J	0.2 U	--	--	0.3	0.1 J	--	0.3	0.6	--	0.048 J	--
Metals	EPA 200.8	MAGNESIUM	µg/L	--	--	--	--	7840	--	19600	14200	--	--	45100	31800	--	39100	31300	--	22000	--
Metals	EPA 200.8	MANGANESE	µg/L	--	50	--	500	8.5	--	0.3	0.6	--	--	6.5	**86.6**	--	2	12.9	--	28.5	--
Metals	EPA 200.8	NICKEL	µg/L	100	--	12	--	0.5 J	--	1.4 J	0.9 J	--	--	2.5 J	1.4 J	--	3.4 J	10 U	--	0.8 J	--
Metals	EPA 200.8	POTASSIUM	µg/L	--	--	--	--	1980	--	3080	1900	--	--	3120	2900	--	3080	2840	--	3200	--
Metals	EPA 200.8	SELENIUM	µg/L	50	--	--	--	0.2 U	--	0.2 U	0.2 U	--	--	0.8	0.5	--	2	1.3	--	1.2	--
Metals	EPA 200.8	SILVER	µg/L	--	100	--	--	0.2 U	--	0.2 U	0.2 U	--	--	0.2 U	0.2 U	--	0.2 U	0.2 U	--	0.2 U	--
Metals	EPA 200.8	SODIUM	µg/L	--	--	--	--	42700	--	23200	29400	--	--	34300	34700	--	39300	34200	--	48300	--
Metals	EPA 200.8	THALLIUM	µg/L	2	--	0.1	--	0.2 U	--	0.2 U	0.2 U	--	--	0.033 J	0.2 U	--	0.2 U	0.033 J	--	0.2 U	--
Metals	EPA 200.8	VANADIUM	µg/L	--	--	--	50	6.7	--	9.2	7.5	--	--	14.4	4.3	--	6.9	7.9	--	6.5	--
Metals	EPA 200.8	ZINC	µg/L	--	5000	--	--	50 U	--	3.7 J	11.4 U	--	--	4.7 J	4.2 J	--	15.9 J	42.2 J	--	50 U	--

Notes:

N = Normal Environmental Sample
DUP = Field Duplicate Sample
"--" = Sample was not analyzed using this method.
E = Analyte concentration is above calibration range
J = Estimated value
U = Not detected at the listed reporting limit.
UJ = The compound or analyte was analyzed for but not detected. The sample detection limit is an estimatec
µg/L = micrograms per liter
mg/L = milligrams per liter
XX = Bolding of value and qualifier means that the detection limit exceeds a CA Primary/Secondary MCL or DHS Action Level.
[ ] = Bolding and outlining of value and qualifier means that a detected value exceeds a CA Primary/Seconda MCL or DHS Action Level.

TABLE 3A-13

Summary of General Mineral, Physical, and Radiological Parameter Data for JPL Monitoring Wels

Station ID:								MW-3-3	MW-3-3	MW-3-5	MW-4-1	MW-4-2	MW-4-2	MW-4-2	MW-4-5	MW-7	MW-8	MW-10	MW-12-3
QAQC Type:								N	N	N	N	N	N	N	N	N	N	N	N
Date Collected:								12/20/02	02/24/03	02/27/03	12/27/02	12/27/02	12/31/02	01/02/03	01/02/03	01/16/03	01/17/03	01/17/03	01/03/03
Analyte Type	**Method**	**Analyte**	**Units**	**CA Primary MCL**	**CA Secondary MCL**	**CA PHG**	**DHS Action Level**												
Alkalinity	EPA 310.1	ALKALINITY	mg/L	--	--	--	--	135	--	--	--	--	230	--	--	123	156	222	169
Anions	EPA 300.0	BROMIDE	mg/L	--	--	--	--	2 U	--	0.5 U	1 U	--	2 U	--	1 U	0.44 B	0.5 U	4 U	0.8 U
Anions	EPA 300.0	CHLORIDE	mg/L	--	250	--	--	43.6	--	8.4	28.8	--	92.9	--	20.9	31	19.6	141	15.2
Anions	EPA 300.0	FLUORIDE	mg/L	2	--	1	--	1.3 B	--	**4.1**	1	--	1.5	--	0.75	1.2	0.86	2 B	1.1
Anions	EPA 300.0	NITRATE (NO3-) AS N	mg/L	45	--	10	--	1 U	--	0.25 U	6.3	--	8.3	--	0.29	9.1	3.4	17.4	0.64
Anions	EPA 300.0	NITRITE (AS N)	mg/L	1	--	0.001	--	1 U	--	0.25 U	0.5 U	--	0.1 U	--	0.1 U	0.5 U	0.25 U	**2 U**	0.4 U
Anions	EPA 300.0	SULFATE (SO4--)	mg/L	--	250	--	--	36.7	--	14.5	55.3	--	107	--	19.5	36.8	44.4	189	36.9
BOD	EPA 405.1	BIOLOGIC OXYGEN DEMAND	mg O2/L	--	--	--	--	0.88 B	--	--	--	--	2 B	--	--	2.5 B	3 U	1.5 B	3 U
COD	EPA 410.4	CHEMICAL OXYGEN DEMAND	mg O2/L	--	--	--	--	--	5 U	--	--	--	--	5 U	--	5 U	5 U	5 U	--
Color	EPA 110.2	COLOR	COLOR	--	15	--	--	5	--	10	5	--	5	--	5	1 U	5	5	5
Hardness (Total) as CaCO3	EPA 130	HARDNESS (TOTAL) AS CACO3	mg/L	--	--	--	--	146	--	--	--	--	382	--	--	197	205	562	186
MBAS	EPA 425.1	FOAMING AGENTS (MBAS)	mg/L	--	0.5	--	--	0.05 U	--	0.021 U	0.05 U	--	0.05 U	--	0.05 U	0.049 U	0.049 U	0.049 U	0.05
pH	EPA 9040B	PH	UNIT	--	6.5	--	--	**7.96**	--	**9.39**	**7.05**	--	**7.16**	--	**8.37**	**7.2**	**6.93**	**6.77**	**7.01**
RAD	ML/EPA 900.0	ALPHA, GROSS	PCI/L	15	--	--	--	0.447 U	--	--	--	--	--	9.76	--	1.4	2.41	3.34	--
RAD	ML/EPA 900.0	BETA, GROSS	PCI/L	50	--	--	--	1.12 U	--	--	--	--	--	9.16	--	3.16	3.93	2.4	--
TDS	EPA 160.1	TOTAL DISSOLVED SOLIDS (TDS)	mg/L	--	500	--	--	253	--	271	350	--	**608**	--	182	301	311	**821**	253
TOC	415.1	TOTAL ORGANIC CARBON	mg/L	--	--	--	--	--	1.2	--	--	--	--	1 U	--	7.3	5.9	6.4	--
TPH - Diesel	EPA 8015M	TPH-DIESEL	mg/L	--	--	--	--	0.01 J	--	--	--	0.96 U	--	--	--	0.96 U	--	0.96 U	0.96 U
TPH - Gasoline	EPA 8015M	TPH-GASOLINE	mg/L	--	--	--	--	--	0.1 UB	--	--	--	--	0.1 UB	--	0.1 UB	--	0.1 UB	--
TPH - Motor Oils	EPA 8015M	TPH-MOTOR OILS	mg/L	--	--	--	--	0.03 J	--	--	--	0.09 J	--	--	--	0.96 U	--	0.96 U	0.96 U
Turbidity	EPA 180.1	TURBIDITY	NTU	--	5	--	--	1.6	--	**5.3**	**21.3**	--	2.7	--	**12.2**	1.6	1.7	2.2	1.9

Notes:

N = Normal Environmental Sample
DUP = Field Duplicate Sample
"--" = Sample was not analyzed using this method.
B = Analyte is present in method blank
F = Analyte confirmation on secondary column
J = Estimated value
U = Not detected at the listed reporting limit.
UR = Not detected at the listed reporting limit. Quality control indicates the data are not usable.
µg/L = micrograms per liter
mg/L = milligrams per liter
NTU = Nephelometric Turbidity Units
mg O2/L = milligrams of oxygen per liter
pCi/L = picocuries per liter
XX = Bolding of value and qualifier means that the detection limit exceeds a CA Primary/Secondary MCL or DHS Action Level.
[ ] = Bolding and outlining of value and qualifier means that a detected value exceeds a CA Primary/Secondary MCL or DHS Action Level.

TABLE 3A-13

Summary of General Mineral, Physical, and Radiological Parameter Data for JPL Monitoring Wels

Station ID:								MW-12-3	MW-12-5	MW-14-2	MW-14-4	MW-14-4	MW-16	MW-16	MW-17-3	MW-17-4	MW-17-4	MW-17-4
QAQC Type:								N	N	N	N	N	N	DUP	N	N	N	DUP
Date Collected:								01/06/03	01/07/03	12/17/02	12/18/02	12/20/02	01/16/03	01/16/03	12/12/02	12/13/02	12/16/02	12/13/02
Analyte Type	**Method**	**Analyte**	**Units**	**CA Primary MCL**	**CA Secondary MCL**	**CA PHG**	**DHS Action Level**											
Alkalinity	EPA 310.1	ALKALINITY	mg/L	--	--	--	--	--	--	240	--	--	169	171	--	148	--	146
Anions	EPA 300.0	BROMIDE	mg/L	--	--	--	--	--	0.5 U	4 U	1.6 U	--	2 U	2 U	0.4 U	0.4 U	--	0.4 U
Anions	EPA 300.0	CHLORIDE	mg/L	--	250	--	--	--	16.4	111	41	--	46.2	45.3	12.7	11.8	--	11.7
Anions	EPA 300.0	FLUORIDE	mg/L	2	--	1	--	--	1.1	**4 U**	**2.1**	--	1.4 B	1.4 B	0.83	0.96	--	0.93
Anions	EPA 300.0	NITRATE (NO3-) AS N	mg/L	45	--	10	--	--	1.6	15	0.8 U	--	4	4.2	1.5	0.41	--	0.42
Anions	EPA 300.0	NITRITE (AS N)	mg/L	1	--	0.001	--	--	0.100 U	**2 U**	0.8 U	--	1 U	1 U	0.2 U	0.2 U	--	0.2 U
Anions	EPA 300.0	SULFATE (SO4--)	mg/L	--	250	--	--	--	12.6	176	35.5	--	33.5	33.8	30.1	14.6	--	14.4
BOD	EPA 405.1	BIOLOGIC OXYGEN DEMAND	mg O2/L	--	--	--	--	--	--	1.2 F	--	--	2.5 B	2.7 B	--	3 U	--	0.73 B
COD	EPA 410.4	CHEMICAL OXYGEN DEMAND	mg O2/L	--	--	--	--	5 U	--	5 U	--	--	5 U	5 U	--	--	5 U	--
Color	EPA 110.2	COLOR	COLOR	--	15	--	--	--	5	5	1 U	--	1 U	1 U	**25**	5	--	5
Hardness (Total) as CaCO3	EPA 130	HARDNESS (TOTAL) AS CACO3	mg/L	--	--	--	--	--	--	564	--	--	218	220	--	96.9	--	89
MBAS	EPA 425.1	FOAMING AGENTS (MBAS)	mg/L	--	0.5	--	--	--	0.049 U	0.05 UR	0.05 U	--	0.049 U	0.049 U	0.05 U	0.05 U	--	0.05 U
pH	EPA 9040B	PH	UNIT	--	6.5	--	--	--	**7.71**	**7.39**	**7.56**	--	**7.24**	**7.29**	**7.95**	**7.94**	--	**8.09**
RAD	ML/EPA 900.0	ALPHA, GROSS	PCI/L	15	--	--	--	7.75	--	1.54	--	1.85	3.81	2.01	--	--	2.22	--
RAD	ML/EPA 900.0	BETA, GROSS	PCI/L	50	--	--	--	4.62	--	2.09	--	3.69	5.67	3.29	--	--	3.78	--
TDS	EPA 160.1	TOTAL DISSOLVED SOLIDS (TDS)	mg/L	--	500	--	--	--	232	**967**	372	--	342	335	221	190	--	202
TOC	415.1	TOTAL ORGANIC CARBON	mg/L	--	--	--	--	1 U	--	3.7	--	--	7	6.1	--	--	0.51 B	--
TPH - Diesel	EPA 8015M	TPH-DIESEL	mg/L	--	--	--	--	--	--	1 U	--	--	0.96 U	0.96 U	--	0.01 J	--	0.01 J
TPH - Gasoline	EPA 8015M	TPH-GASOLINE	mg/L	--	--	--	--	0.1 UB	--	0.05 U	--	--	0.1 UB	0.1 UB	--	--	0.1 UB	--
TPH - Motor Oils	EPA 8015M	TPH-MOTOR OILS	mg/L	--	--	--	--	--	--	1 U	--	--	0.96 U	0.96 U	--	0.96 U	--	0.96 U
Turbidity	EPA 180.1	TURBIDITY	NTU	--	5	--	--	--	4.8	**5.7**	1.1	--	1.5	1.4	**38**	**15.4**	--	**29**

Notes:

N = Normal Environmental Sample
DUP = Field Duplicate Sample
"--" = Sample was not analyzed using this method.
B = Analyte is present in method blank
F = Analyte confirmation on secondary column
J = Estimated value
U = Not detected at the listed reporting limit.
UR = Not detected at the listed reporting limit. Quality control indicates the data are not usable.
µg/L = micrograms per liter
mg/L = milligrams per liter
NTU = Nephelometric Turbidity Units
mg O2/L = milligrams of oxygen per liter
pCi/L = picocuries per liter
XX = Bolding of value and qualifier means that the detection limit exceeds a CA Primary/Secondary MCL or DHS Action Level.
[ ] = Bolding and outlining of value and qualifier means that a detected value exceeds a CA Primary/Secondary MCL or DHS Action Level.

J

TABLE 3A-13

Summary of General Mineral, Physical, and Radiological Parameter Data for JPL Monitoring Wels

Station ID:								MW-17-4	MW-18-3	MW-18-4	MW-19-3	MW-19-5	MW-21-3	MW-21-5	MW-21-5	MW-24-2	MW-24-2
QAQC Type:								DUP	N	N	N	N	N	N	N	N	N
Date Collected:								12/16/02	12/10/02	12/11/02	12/06/02	12/09/02	12/04/02	12/05/02	12/06/02	01/08/03	01/09/03
Analyte Type	**Method**	**Analyte**	**Units**	**CA Primary MCL**	**CA Secondary MCL**	**CA PHG**	**DHS Action Level**										
Alkalinity	EPA 310.1	ALKALINITY	mg/L	--	--	--	--	--	--	161	273	--	--	210	--	164	--
Anions	EPA 300.0	BROMIDE	mg/L	--	--	--	--	--	0.5 U	0.120 B	4 U	2 U	2.5 U	2 U	--	2 U	--
Anions	EPA 300.0	CHLORIDE	mg/L	--	250	--	--	--	18.9	12.1	101	68.4	108	69.4	--	53.4	--
Anions	EPA 300.0	FLUORIDE	mg/L	2	--	1	--	--	0.840	0.900	**4 U**	2 U	1.5 B	0.740 B	--	1.3 B	--
Anions	EPA 300.0	NITRATE (NO3-) AS N	mg/L	45	--	10	--	--	1.1	1.3	10.3	1.2	9.5	7.4	--	2.8	--
Anions	EPA 300.0	NITRITE (AS N)	mg/L	1	--	0.001	--	--	0.25 U	0.130 U	**2 U**	1 U	**1.3 U**	1 U	--	1 U	--
Anions	EPA 300.0	SULFATE (SO4--)	mg/L	--	250	--	--	--	42.2	27.1	111	65.8	117	99.4	--	45.1	--
BOD	EPA 405.1	BIOLOGIC OXYGEN DEMAND	mg O2/L	--	--	--	--	--	--	4.7 U	1.1 B	--	--	3 U	--	0.670 B	--
COD	EPA 410.4	CHEMICAL OXYGEN DEMAND	mg O2/L	--	--	--	--	5 U	--	5 U	5 U	--	--	5 U	--	--	5 U
Color	EPA 110.2	COLOR	COLOR	--	15	--	--	--	1 U	1 U	1 U	5	1 U	5	--	1 U	--
Hardness (Total) as CaCO3	EPA 130	HARDNESS (TOTAL) AS CACO3	mg/L	--	--	--	--	--	--	156	509	--	--	372	--	207	--
MBAS	EPA 425.1	FOAMING AGENTS (MBAS)	mg/L	--	0.5	--	--	--	0.062	0.049 U	0.049 U	0.069	0.07	0.049 U	--	0.049 U	--
pH	EPA 9040B	PH	UNIT	--	6.5	--	--	--	**7.96**	**7.92**	**7.39**	**8.17**	**7.39**	**7.78**	--	**7.86**	--
RAD	ML/EPA 900.0	ALPHA, GROSS	PCI/L	15	--	--	--	3.04	--	5.17	8.49	--	--	--	13.5	--	8.68
RAD	ML/EPA 900.0	BETA, GROSS	PCI/L	50	--	--	--	3.63	--	3.82	8.87	--	--	--	8.85	--	5.53
TDS	EPA 160.1	TOTAL DISSOLVED SOLIDS (TDS)	mg/L	--	500	--	--	--	326	239	**837**	383	**669**	**526**	--	343	--
TOC	415.1	TOTAL ORGANIC CARBON	mg/L	--	--	--	--	1.6	--	3.3 U	1.8	--	--	--	1.6	--	1.3 U
TPH - Diesel	EPA 8015M	TPH-DIESEL	mg/L	--	--	--	--	--	--	0.96 U	0.96 U	--	--	0.96 U	--	--	0.02 J
TPH - Gasoline	EPA 8015M	TPH-GASOLINE	mg/L	--	--	--	--	--	--	0.1 UB	0.1 UB	--	--	0.1 UB	--	--	0.1 UB
TPH - Motor Oils	EPA 8015M	TPH-MOTOR OILS	mg/L	--	--	--	--	--	--	0.96 U	0.96 U	--	--	0.96 U	--	--	0.96 U
Turbidity	EPA 180.1	TURBIDITY	NTU	--	5	--	--	--	--	2.4	--	--	0.27 B	**11.6**	--	3.2 U	--

Notes:

N = Normal Environmental Sample
DUP = Field Duplicate Sample
"--" = Sample was not analyzed using this method.
B = Analyte is present in method blank
F = Analyte confirmation on secondary column
J = Estimated value
U = Not detected at the listed reporting limit.
UR = Not detected at the listed reporting limit. Quality control indicates the data are not usable.
µg/L = micrograms per liter
mg/L = milligrams per liter
NTU = Nephelometric Turbidity Units
mg O2/L = milligrams of oxygen per liter
pCi/L = picocuries per liter
XX = Bolding of value and qualifier means that the detection limit exceeds a CA Primary/Secondary MCL or DHS Action Level.
[ ] = Bolding and outlining of value and qualifier means that a detected value exceeds a CA Primary/Secondary MCL or DHS Action Level.

TABLE 3A-14

Summary of 1,4-Dioxane, Nitrosamines, Perchlorate, and Chlorate Data for JPL Monitoring Wells

Station ID:								MW-3-3	MW-3-3	MW-3-3	MW-3-5	MW-3-5	MW-4-1	MW-4-1	MW-4-1	MW-4-1	MW-4-2	MW-4-2	MW-4-2	MW-4-2
QAQC Type:								N	N	N	N	N	N	N	N	N	N	N	N	N
Date Collected:								10/28/02	12/20/02	02/24/03	10/28/02	02/27/03	10/30/02	12/27/02	12/30/02	01/02/03	10/30/02	12/27/02	12/30/02	01/02/03
Analyte Type	**Method**	**Analyte**	**Units**	**CA Primary MCL**	**CA Secondary MCL**	**CA PHG**	**DHS Action Level**													
1,4-Dioxane	EPA 8270 SIM	1,4-DIOXANE	µg/L	--	--	--	3	--	0.6 J	--	--	1 U	--	1.2	--	--	--	1.1	--	--
Anions	EPA 300.0	CHLORATE	mg/L	--	--	--	--	--	--	0.100 U	--	0.100 U	--	--	0.099 J	--	--	--	0.52	--
NDMA	MOE MSABN-E3291A	N-NITROSODI-N-PROPYLAMINE	µg/L	--	--	--	--	--	--	0.005 U	--	0.125	--	--	--	0.005 UJ	--	--	--	0.005 UJ
NDMA	MOE MSABN-E3291A	N-NITROSODIMETHYLAMINE (NDMA)	µg/L	--	--	--	0.01	--	--	0.00044 J	--	0.00575	--	--	--	0.002 U	--	--	--	0.002 U
NDMA	MOE MSABN-E3291A	N-NITROSODIPHENYLAMINE	µg/L	--	--	--	--	--	--	0.005 U	--	0.0249 J	--	--	--	0.00178 J	--	--	--	0.005 UJ
Perchlorate	EPA 314	PERCHLORATE	µg/L	--	--	--	4	4 U	--	--	4 U	--	**28.7**	--	--	--	4 U	--	--	--

Notes:

N = Normal Environmental Sample
DUP = Field Duplicate Sample
"--" = Sample was not analyzed using this method.
B = Analyte is present in method blank
J = Estimated value
U = Not detected at the listed reporting limit.
UJ = The compound or analyte was analyzed for but not detected. The sample detection limit is an estimated value.
µg/L = micrograms per liter
mg/L = milligrams per liter
XX = Bolding of value and qualifier means that the detection limit exceeds a CA Primary/Secondary MCL or DHS Action Level.
[ ] = Bolding and outlining of value and qualifier means that a detected value exceeds a CA Primary/Secondary MCL or DHS Action Level.

TABLE 3A-14

Summary of 1,4-Dioxane, Nitrosamines, Perchlorate, and Chlorate Data for JPL Monitoring Wells

Station ID:								MW-4-2	MW-4-5	MW-4-5	MW-4-5	MW-7	MW-7	MW-8	MW-8	MW-10	MW-10	MW-12-3	MW-12-3	MW-12-3
QAQC Type:								DUP	N	N	DUP	N	N	N	N	N	N	N	N	N
Date Collected:								10/30/02	12/30/02	01/02/03	01/02/03	11/06/02	01/16/03	11/06/02	01/17/03	11/05/02	01/17/03	10/15/02	01/03/03	01/06/03
Analyte Type	**Method**	**Analyte**	**Units**	**CA Primary MCL**	**CA Secondary MCL**	**CA PHG**	**DHS Action Level**													
1,4-Dioxane	EPA 8270 SIM	1,4-DIOXANE	µg/L	--	--	--	3	--	--	1 U	--	--	3	--	1 U	--	1	--	1.7	--
Anions	EPA 300.0	CHLORATE	mg/L	--	--	--	--	--	0.1 U	--	--	--	0.1 U	--	0.1 U	--	0.875	--	--	0.1 U
NDMA	MOE MSABN-E3291A	N-NITROSODI-N-PROPYLAMINE	µg/L	--	--	--	--	--	--	0.005 UJ	--	--	0.005 U	--	0.005 U	--	0.005 U	--	--	--
NDMA	MOE MSABN-E3291A	N-NITROSODIMETHYLAMINE (NDMA)	µg/L	--	--	--	0.01	--	--	0.002 U	--	--	0.00366	--	0.00209 U	--	0.00314 U	--	--	--
NDMA	MOE MSABN-E3291A	N-NITROSODIPHENYLAMINE	µg/L	--	--	--	--	--	--	0.00148 J	--	--	0.00174 J	--	0.00166 J	--	0.00201 J	--	--	--
Perchlorate	EPA 314	PERCHLORATE	µg/L	--	--	--	4	4 U	--	3.6	2.5 B	**13300**	--	**127**	--	4 U	--	4 U	--	--

Notes:

N = Normal Environmental Sample
DUP = Field Duplicate Sample
"--" = Sample was not analyzed using this method.
B = Analyte is present in method blank
J = Estimated value
U = Not detected at the listed reporting limit.
UJ = The compound or analyte was analyzed for but not detected. The sample detection limit is an estimated value.
µg/L = micrograms per liter
mg/L = milligrams per liter
XX = Bolding of value and qualifier means that the detection limit exceeds a CA Primary/Secondary MCL or DHS Action Level.
[ ] = Bolding and outlining of value and qualifier means that a detected value exceeds a CA Primary/Secondary MCL or DHS Action Level.

J

TABLE 3A-14

Summary of 1,4-Dioxane, Nitrosamines, Perchlorate, and Chlorate Data for JPL Monitoring Wells

Station ID:								MW-12-3	MW-12-5	MW-12-5	MW-12-5	MW-14-2	MW-14-2	MW-14-2	MW-14-2	MW-14-4	MW-14-4	MW-14-4	MW-16
QAQC Type:								N	N	N	N	N	N	N	N	N	N	N	N
Date Collected:								01/07/03	10/15/02	01/06/03	01/07/03	10/31/02	12/17/02	12/18/02	12/19/02	10/31/02	12/18/02	12/19/02	11/05/02
Analyte Type	Method	Analyte	Units	CA Primary MCL	CA Secondary MCL	CA PHG	DHS Action Level												
1,4-Dioxane	EPA 8270 SIM	1,4-DIOXANE	µg/L	--	--	--	3	--	--	--	1 U	--	1.2	--	--	--	1 U	--	--
Anions	EPA 300.0	CHLORATE	mg/L	--	--	--	--	--	--	0.1 U	--	--	--	--	0.8 J	--	--	0.265	--
NDMA	MOE MSABN-E3291A	N-NITROSODI-N-PROPYLAMINE	µg/L	--	--	--	--	0.005 U	--	--	0.005 U	--	--	0.005 U	--	--	0.005 U	--	--
NDMA	MOE MSABN-E3291A	N-NITROSODIMETHYLAMINE (NDMA)	µg/L	--	--	--	0.01	0.002 UB	--	--	0.002 UB	--	--	0.002 UB	--	--	0.002 UB	--	--
NDMA	MOE MSABN-E3291A	N-NITROSODIPHENYLAMINE	µg/L	--	--	--	--	0.005 U	--	--	0.005 U	--	--	0.00258 J	--	--	0.00173 J	--	--
Perchlorate	EPA 314	PERCHLORATE	µg/L	--	--	--	4	--	4 U	--	--	4 U	--	--	--	4 U	--	--	**1920**

Notes:

N = Normal Environmental Sample
DUP = Field Duplicate Sample
"--" = Sample was not analyzed using this method.
B = Analyte is present in method blank
J = Estimated value
U = Not detected at the listed reporting limit.
UJ = The compound or analyte was analyzed for but not detected. The sample detection limit is an estimated value.
µg/L = micrograms per liter
mg/L = milligrams per liter
XX = Bolding of value and qualifier means that the detection limit exceeds a CA Primary/Secondary MCL or DHS Action Level.
[ ] = Bolding and outlining of value and qualifier means that a detected value exceeds a CA Primary/Secondary MCL or DHS Action Level.

TABLE 3A-14

Summary of 1,4-Dioxane, Nitrosamines, Perchlorate, and Chlorate Data for JPL Monitoring Wells

Station ID:								MW-16	MW-16	MW-16	MW-16	MW-17-3	MW-17-3	MW-17-3	MW-17-4	MW-17-4	MW-17-4	MW-17-4	MW-17-4
QAQC Type:								N	DUP	DUP	DUP	N	N	N	N	N	N	N	DUP
Date Collected:								01/16/03	11/05/02	01/16/03	01/17/03	11/01/02	12/12/02	12/26/02	11/01/02	12/12/02	12/13/02	01/13/03	12/12/02
Analyte Type	**Method**	**Analyte**	**Units**	**CA Primary MCL**	**CA Secondary MCL**	**CA PHG**	**DHS Action Level**												
1,4-Dioxane	EPA 8270 SIM	1,4-DIOXANE	µg/L	--	--	--	3	3	--	3	--	--	0.96 U	--	--	--	0.96 U	--	--
Anions	EPA 300.0	CHLORATE	mg/L	--	--	--	--	0.11	--	0.1 U	--	--	0.100 U	--	--	0.1 U	--	--	0.1 U
NDMA	MOE MSABN-E3291A	N-NITROSODI-N-PROPYLAMINE	µg/L	--	--	--	--	0.005 U	--	--	0.005 U	--	--	0.005 U	--	--	--	0.005 U	--
NDMA	MOE MSABN-E3291A	N-NITROSODIMETHYLAMINE (NDMA)	µg/L	--	--	--	0.01	0.0023 U	--	--	0.00229 U	--	--	0.002 UB	--	--	--	0.002 UB	--
NDMA	MOE MSABN-E3291A	N-NITROSODIPHENYLAMINE	µg/L	--	--	--	--	0.00143 J	--	--	0.0021 J	--	--	0.00227 J	--	--	--	0.00312 J	--
Perchlorate	EPA 314	PERCHLORATE	µg/L	--	--	--	4	--	**2000**	--	--	**115**	--	--	4 U	--	--	--	--

Notes:

N = Normal Environmental Sample
DUP = Field Duplicate Sample
"--" = Sample was not analyzed using this method.
B = Analyte is present in method blank
J = Estimated value
U = Not detected at the listed reporting limit.
UJ = The compound or analyte was analyzed for but not detected. The sample detection limit is an estimated value.
µg/L = micrograms per liter
mg/L = milligrams per liter
XX = Bolding of value and qualifier means that the detection limit exceeds a CA Primary/Secondary MCL or DHS Action Level.
[ ] = Bolding and outlining of value and qualifier means that a detected value exceeds a CA Primary/Secondary MCL or DHS Action Level.

TABLE 3A-14

Summary of 1,4-Dioxane, Nitrosamines, Perchlorate, and Chlorate Data for JPL Monitoring Wells

Station ID:								MW-17-4	MW-18-3	MW-18-3	MW-18-3	MW-18-4	MW-18-4	MW-18-4	MW-19-3	MW-19-3	MW-19-3	MW-19-5	MW-19-5
QAQC Type:								DUP	N	N	N	N	N	N	N	N	N	N	N
Date Collected:								12/13/02	11/04/02	12/10/02	01/20/03	11/04/02	12/11/02	01/20/03	10/21/02	12/06/02	12/09/02	10/21/02	12/09/02
Analyte Type	**Method**	**Analyte**	**Units**	**CA Primary MCL**	**CA Secondary MCL**	**CA PHG**	**DHS Action Level**												
1,4-Dioxane	EPA 8270 SIM	1,4-DIOXANE	µg/L	--	--	--	3	0.96 U	--	0.96 U	--	--	1.9	--	--	0.96 U	--	--	0.96 U
Anions	EPA 300.0	CHLORATE	mg/L	--	--	--	--	--	--	0.073 J	--	--	0.100 U	--	--	--	0.549	--	0.100 U
NDMA	MOE MSABN-E3291A	N-NITROSODI-N-PROPYLAMINE	µg/L	--	--	--	--	--	--	--	0.005 U	--	--	0.005 U	--	--	0.005 U	--	0.005 U
NDMA	MOE MSABN-E3291A	N-NITROSODIMETHYLAMINE (NDMA)	µg/L	--	--	--	0.01	--	--	--	0.002 UB	--	--	0.002 UB	--	--	0.002 U	--	0.002 U
NDMA	MOE MSABN-E3291A	N-NITROSODIPHENYLAMINE	µg/L	--	--	--	--	--	--	--	0.005 U	--	--	0.005 U	--	--	0.00334 J	--	0.00617
Perchlorate	EPA 314	PERCHLORATE	µg/L	--	--	--	4	--	4 U	--	--	**28.2**	--	--	4 U	--	--	4 U	--

Notes:

N = Normal Environmental Sample
DUP = Field Duplicate Sample
"--" = Sample was not analyzed using this method.
B = Analyte is present in method blank
J = Estimated value
U = Not detected at the listed reporting limit.
UJ = The compound or analyte was analyzed for but not detected. The sample detection limit is an estimated value.
µg/L = micrograms per liter
mg/L = milligrams per liter
XX = Bolding of value and qualifier means that the detection limit exceeds a CA Primary/Secondary MCL or DHS Action Level.
[ ] = Bolding and outlining of value and qualifier means that a detected value exceeds a CA Primary/Secondary MCL or DHS Action Level.

TABLE 3A-14

Summary of 1,4-Dioxane, Nitrosamines, Perchlorate, and Chlorate Data for JPL Monitoring Wells

Station ID:								**MW-19-5**	**MW-21-3**	**MW-21-3**	**MW-21-3**	**MW-21-3**	**MW-21-5**	**MW-21-5**	**MW-24-2**	**MW-24-2**
QAQC Type:								DUP	N	N	N	N	N	N	N	N
Date Collected:								10/21/02	10/18/02	12/04/02	12/05/02	01/13/03	10/18/02	12/05/02	10/29/02	01/08/03
Analyte Type	**Method**	**Analyte**	**Units**	**CA Primary MCL**	**CA Secondary MCL**	**CA PHG**	**DHS Action Level**									
1,4-Dioxane	EPA 8270 SIM	1,4-DIOXANE	µg/L	--	--	--	3	--	--	1 U	--	--	--	0.96 U	--	1 U
Anions	EPA 300.0	CHLORATE	mg/L	--	--	--	--	--	--	--	0.457	--	--	0.361	--	0.106
NDMA	MOE MSABN-E3291A	N-NITROSODI-N-PROPYLAMINE	µg/L	--	--	--	--	--	--	--	--	0.005 U	--	0.005 U	--	--
NDMA	MOE MSABN-E3291A	N-NITROSODIMETHYLAMINE (NDMA)	µg/L	--	--	--	0.01	--	--	--	--	0.002 UB	--	0.0016 J	--	--
NDMA	MOE MSABN-E3291A	N-NITROSODIPHENYLAMINE	µg/L	--	--	--	--	--	--	--	--	0.005 U	--	0.00199 J	--	--
Perchlorate	EPA 314	PERCHLORATE	µg/L	--	--	--	4	4 U	4 U	--	--	--	4 U	--	4 U	--

Notes:

N = Normal Environmental Sample
DUP = Field Duplicate Sample
"--" = Sample was not analyzed using this method.
B = Analyte is present in method blank
J = Estimated value
U = Not detected at the listed reporting limit.
UJ = The compound or analyte was analyzed for but not detected. The sample detection limit is an estimated value.
µg/L = micrograms per liter
mg/L = milligrams per liter
XX = Bolding of value and qualifier means that the detection limit exceeds a CA Primary/Secondary MCL or DHS Action Level.
[ ] = Bolding and outlining of value and qualifier means that a detected value exceeds a CA Primary/Secondary MCL or DHS Action Level.

TABLE 3A-15

Summary of Dioxins and Furans Data for JPL Monitoring Wells

Station ID:								MW-3-3	MW-7	MW-12-3	MW-16	MW-16
QAQC Type:								N	N	N	N	DUP
Date Collected:								12/26/02	01/16/03	01/06/03	01/16/03	01/16/03
Analyte Type	**Method**	**Analyte**	**Units**	**CA Primary MCL**	**CA Secondary MCL**	**CA PHG**	**DHS Action Level**					
Dioxins & Furans	EPA 8290	1,2,3,4,6,7,8-HpCDD	PG/L	--	--	--	--	3.02 U	3.06 U	3.57 U	3.06 U	1.88 U
Dioxins & Furans	EPA 8290	1,2,3,4,6,7,8-HpCDF	PG/L	--	--	--	--	2.31 U	1.56 U	1.17 U	1.42 U	1.28 U
Dioxins & Furans	EPA 8290	1,2,3,4,7,8,9-HpCDF	PG/L	--	--	--	--	3.11 U	2.37 U	1.46 U	1.94 U	1.83 U
Dioxins & Furans	EPA 8290	1,2,3,4,7,8-HxCDD	PG/L	--	--	--	--	4.97 U	2.83 U	3.75 U	3.84 U	2.67 U
Dioxins & Furans	EPA 8290	1,2,3,4,7,8-HxCDF	PG/L	--	--	--	--	0.845 U	1.09 U	0.941 U	1.03 U	1.02 U
Dioxins & Furans	EPA 8290	1,2,3,6,7,8-HxCDD	PG/L	--	--	--	--	5.42 U	3.35 U	4.11 U	4.48 U	2.55 U
Dioxins & Furans	EPA 8290	1,2,3,6,7,8-HxCDF	PG/L	--	--	--	--	1.06 U	1.28 U	1.08 U	1.12 U	1.15 U
Dioxins & Furans	EPA 8290	1,2,3,7,8,9-HxCDD	PG/L	--	--	--	--	4.85 U	3.02 U	3.73 U	4.1 U	2.45 U
Dioxins & Furans	EPA 8290	1,2,3,7,8,9-HxCDF	PG/L	--	--	--	--	1.07 U	1.37 U	1.15 U	1.2 U	1.2 U
Dioxins & Furans	EPA 8290	1,2,3,7,8-PeCDD	PG/L	--	--	--	--	2.42 U	2.74 U	2.68 U	3 U	1.81 U
Dioxins & Furans	EPA 8290	1,2,3,7,8-PeCDF	PG/L	--	--	--	--	2.58 U	2.82 U	3.02 U	2.01 U	2.01 U
Dioxins & Furans	EPA 8290	2,3,4,6,7,8-HxCDF	PG/L	--	--	--	--	1.28 U	1.73 U	1.27 U	1.63 U	1.49 U
Dioxins & Furans	EPA 8290	2,3,4,7,8-PeCDF	PG/L	--	--	--	--	2.18 U	2.41 U	2.33 U	1.68 U	2.09 U
Dioxins & Furans	EPA 8290	2,3,7,8-TCDD (DIOXIN)	PG/L	30	--	--	--	1.68 U	1.22 U	1.55 U	1.44 U	1.13 U
Dioxins & Furans	EPA 8290	2,3,7,8-TCDF	PG/L	--	--	--	--	1.7 U	1.13 U	1.17 U	1.11 U	1.08 U
Dioxins & Furans	EPA 8290	OCDD	PG/L	--	--	--	--	3.7 U	5.65 U	4.73 U	4.35 U	4 U
Dioxins & Furans	EPA 8290	OCDF	PG/L	--	--	--	--	3.39 U	3.83 U	4.23 U	3.34 U	2.67 U
Dioxins & Furans	EPA 8290	Total HpCDD	PG/L	--	--	--	--	3.02 U	3.06 U	3.57 U	3.06 U	1.87 U
Dioxins & Furans	EPA 8290	Total HpCDF	PG/L	--	--	--	--	3.11 U	2.37 U	1.46 U	1.94 U	1.83 U
Dioxins & Furans	EPA 8290	Total HxCDD	PG/L	--	--	--	--	5.42 U	3.35 U	4.11 U	4.48 U	2.67 U
Dioxins & Furans	EPA 8290	Total HxCDF	PG/L	--	--	--	--	1.28 U	1.73 U	1.27 U	1.63 U	1.49 U
Dioxins & Furans	EPA 8290	Total PeCDD	PG/L	--	--	--	--	2.42 U	2.74 U	2.68 U	3 U	1.81 U
Dioxins & Furans	EPA 8290	Total PeCDF	PG/L	--	--	--	--	2.58 U	2.82 U	3.02 U	2.01 U	2.09 U
Dioxins & Furans	EPA 8290	Total TCDD	PG/L	--	--	--	--	1.68 U	1.22 U	1.55 U	1.44 U	1.13 U
Dioxins & Furans	EPA 8290	Total TCDF	PG/L	--	--	--	--	1.7 U	1.13 U	1.17 U	1.11 U	1.08 U

Notes:

N = Normal Environmental Sample
DUP = Field Duplicate Sample
"--" = Sample was not analyzed using this method.
U = Not detected at the listed reporting limit.
pg/L = picograms per liter
XX = Bolding of value and qualifier means that the detection limit exceeds a CA Primary/Secondary MCL or DHS Action Level.
[ ] = Bolding and outlining of value and qualifier means that a detected value exceeds a CA Primary/Secondary MCL or DHS Action Level.

TABLE 3A-16
Summary Water Quality Statistics for JPL Monitoring Wells
Comprehensive Groundwater Monitoring Event (Dec 2002-Feb 2003)

															CA Primary MCL			CA Secondary MCL			CA PHG			DHS Action Level		
Method	Analyte	CAS	Unit	Number of Detects	Number of Samples	Frequency of Detection	Minimum Nondetect Value	Maximum Nondetect Value	Minimum Detected Value	Maximum Detected Value	Arithmetic Mean	Geometric Mean	Standard Deviation	Upper 95% Confidence	Criteria	# of Detects Exceeded	# of ND Exceeded	Criteria	# of Detects Exceeded	# of ND Exceeded	Criteria	# of Detects Exceeded	# of ND Exceeded	Criteria	# of Detects Exceeded	# of ND Exceeded
EPA 110.2	COLOR	CCC-CC-C	COLOR	14	22	64%	1	1	5	25	4.500	2.403	5.262	6.431	--	--	--	15	1	--	--	--	--	--	--	--
EPA 130	HARDNESS (TOTAL) AS CACO3	11-02-9	mg/L	13	13	100%	--	--	92.95	564	292.150	252.000	165.401	373.911	--	--	--	--	--	--	--	--	--	--	--	--
EPA 160.1	TOTAL DISSOLVED SOLIDS (TDS)	10-33-3	mg/L	22	22	100%	--	--	182	967	409.068	361.555	227.657	492.593	--	--	--	500	6	--	--	--	--	--	--	--
EPA 180.1	TURBIDITY	--	NTU	18	19	95%	3.2	3.2	0.27	38	7.348	3.560	9.908	11.290	--	--	--	5	7	--	--	--	--	--	--	--
EPA 200.8	ALUMINUM	7429-90-5	µg/L	10	22	45%	1.6	50	1.2	173	20.661	8.587	35.631	36.092	1000	--	--	200	--	--	600	--	--	--	--	--
EPA 200.8	ANTIMONY	7440-36-0	µg/L	10	22	45%	0.2	0.5	0.091	1.8	0.261	0.168	0.378	0.399	6	--	--	--	--	--	20	--	--	--	--	--
EPA 200.8	ARSENIC	7440-38-2	µg/L	21	22	95%	0.5	0.5	0.5	2.8	1.055	0.913	0.606	1.277	50	--	--	--	--	--	--	--	--	--	--	--
EPA 200.8	BARIUM	7440-39-3	µg/L	20	22	91%	91.5	104	15.7	194	79.377	66.980	48.960	99.835	1000	--	--	--	--	--	--	--	--	--	--	--
EPA 200.8	BERYLLIUM	7440-41-7	µg/L	9	22	41%	0.2	0.5	0.4	1.8	0.430	0.245	0.474	0.604	4	--	--	--	--	--	--	--	--	--	--	--
EPA 200.8	BORON	7440-42-8	µg/L	21	22	95%	64.7	64.7	9.2	242	110.914	89.817	63.352	134.157	--	--	--	--	--	--	--	--	--	1000	--	--
EPA 200.8	CADMIUM	7440-43-9	µg/L	2	22	9%	0.2	0.2	0.046	0.049	0.095	0.093	0.015	0.101	5	--	--	--	--	--	0.07	--	20	--	--	--
EPA 200.8	CALCIUM	7440-70-2	µg/L	20	22	91%	51000	142000	14600	141000	59984.000	48809.000	38784.000	76190.790	--	--	--	--	--	--	--	--	--	--	--	--
EPA 200.8	CHROMIUM	7440-47-3	µg/L	21	22	95%	3.5	3.5	0.5	9.2	3.566	3.012	2.033	4.312	50	--	--	--	--	--	--	--	--	--	--	--
EPA 200.8	COBALT	7440-48-4	µg/L	17	22	77%	0.071	0.2	0.043	0.3	0.094	0.081	0.063	0.121	--	--	--	--	--	--	--	--	--	--	--	--
EPA 200.8	COPPER	7440-50-8	µg/L	18	22	82%	0.7	1.6	0.7	4	1.334	1.095	0.992	1.722	--	--	--	1000	--	--	170	--	--	1300	--	--
EPA 200.8	IRON	7439-89-6	µg/L	9	22	41%	25	25	45.5	1650	176.877	39.158	394.290	321.538	--	--	--	300	3	--	--	--	--	--	--	--
EPA 200.8	LEAD	7439-92-1	µg/L	19	22	86%	0.2	0.2	0.048	1.1	0.205	0.140	0.239	0.292	--	--	--	--	--	--	2	--	--	15	--	--
EPA 200.8	MAGNESIUM	7439-95-4	µg/L	20	22	91%	19200	49100	334	46700	21848.000	15933.000	13029.000	27293.000	--	--	--	--	--	--	--	--	--	--	--	--
EPA 200.8	MANGANESE	7439-96-5	µg/L	21	22	95%	0.5	0.5	0.1	86.6	15.150	2.646	26.283	24.793	--	--	--	50	2	--	--	--	--	500	--	--
EPA 200.8	NICKEL	7440-02-0	µg/L	18	22	82%	1.4	10	0.5	5.7	2.064	1.576	1.616	2.739	100	--	--	--	--	--	12	--	--	--	--	--
EPA 200.8	POTASSIUM	7440-09-7	µg/L	20	22	91%	2140	2580	1900	3720	2638.860	2542.000	645.330	2908.520	--	--	--	--	--	--	--	--	--	--	--	--
EPA 200.8	SELENIUM	7782-49-2	µg/L	15	22	68%	0.2	0.6	0.3	2	0.714	0.464	0.602	0.965	50	--	--	--	--	--	--	--	--	--	--	--
EPA 200.8	SILVER	7440-22-4	µg/L	1	22	5%	0.2	0.2	0.024	0.024	0.097	0.094	0.016	0.102	--	--	--	100	--	--	--	--	--	--	--	--
EPA 200.8	SODIUM	7440-23-5	µg/L	20	22	91%	29500	33400	14500	48300	30666.000	28756.000	10687.000	35132.000	--	--	--	--	--	--	--	--	--	--	--	--
EPA 200.8	THALLIUM	7440-28-0	µg/L	5	22	23%	0.2	0.2	0.033	0.2	0.093	0.087	0.034	0.106	2	--	--	--	--	--	0.1	1	17	--	--	--
EPA 200.8	VANADIUM	7440-62-2	µg/L	21	22	95%	6.4	6.4	0.8	14.4	5.770	4.491	3.685	7.122	--	--	--	--	--	--	--	--	--	50	--	--
EPA 200.8	ZINC	7440-66-6	µg/L	15	22	68%	3.9	50	3.7	80.7	16.630	10.487	17.837	24.085	--	--	--	5000	--	--	--	--	--	--	--	--
EPA 218.6	CHROMIUM (VI)	18540-29-9	mg/L	8	22	36%	0.0001	0.0002	0.0005	0.0027	0.001	0.000	0.001	0.001	--	--	--	--	--	--	0.0002	8	--	--	--	--
EPA 300.0	BROMIDE	24959-67-9	mg/L	2	22	9%	0.4	4	0.120	0.44	0.791	0.581	0.602	1.012	--	--	--	--	--	--	--	--	--	--	--	--
EPA 300.0	CHLORATE	7790-93-4	mg/L	11	22	50%	0.1	0.1	0.073	0.875	0.217	0.116	0.261	0.324	--	--	--	--	--	--	--	--	--	--	--	--
EPA 300.0	CHLORIDE	16887-00-6	mg/L	22	22	100%	--	--	8.4	141	48.691	34.871	39.368	63.134	--	--	--	250	--	--	--	--	--	--	--	--
EPA 300.0	FLUORIDE	16984-48-8	mg/L	19	22	86%	2	4	0.740	4.1	1.385	1.256	0.746	1.658	2	2	2	--	--	--	1	11	3	--	--	--
EPA 300.0	NITRATE (NO3-) AS N	14797-55-8	mg/L	19	22	86%	0.25	1	0.29	17.4	4.667	2.180	5.059	6.523	45	--	--	--	--	--	10	3	--	--	--	--
EPA 300.0	NITRITE (AS N)	7727-37-9	mg/L	--	22	0%	0.1	2	--	--	0.365	0.236	0.319	0.483	1	--	4	--	--	--	0.001	--	22	--	--	--
EPA 300.0	SULFATE (SO4--)	14808-79-8	mg/L	22	22	100%	--	--	12.6	189	61.366	45.850	50.435	79.870	--	--	--	250	--	--	--	--	--	--	--	--
EPA 310.1	ALKALINITY	10-09-3	mg/L	13	13	100%	--	--	123	273	184.615	179.644	45.564	207.139	--	--	--	--	--	--	--	--	--	--	--	--
EPA 314	PERCHLORATE	14797-73-0	µg/L	7	22	32%	4	4	3.05	13300	708.725	7.688	2842.804	1751.719	--	--	--	--	--	--	--	--	--	4	6	--
EPA 335.2/335.3	CYANIDE	57-12-5	mg/L	--	23	0%	0.02	0.024	--	--	0.012	0.012	0.001	0.012	0.15	--	--	--	--	--	0.15	--	--	--	--	--
EPA 405.1	BIOLOGIC OXYGEN DEMAND	10-26-4	mg O2/L	9	13	69%	3	4.7	0.670	2.6	1.556	1.411	0.650	1.862	--	--	--	--	--	--	--	--	--	--	--	--
EPA 410.4	CHEMICAL OXYGEN DEMAND	10-27-5	mg O2/L	--	13	0%	5	5	--	--	2.500	2.500	--	2.500	--	--	--	--	--	--	--	--	--	--	--	--
EPA 415.1	TOTAL ORGANIC CARBON	7440-44-0	mg/L	9	13	69%	1	3.3	1.055	7.3	2.985	1.965	2.611	4.276	--	--	--	--	--	--	--	--	--	--	--	--
EPA 425.1	FOAMING AGENTS (MBAS)	10-75-3	mg/L	4	21	19%	0.021	0.05	0.05	0.07	0.031	0.028	0.016	0.037	--	--	--	0.5	--	--	--	--	--	--	--	--
EPA 504.1	1,2,3-TRICHLOROPROPANE	96-18-4	µg/L	2	12	17%	0.005	0.005	0.024	0.071	0.010	0.004	0.020	0.020	--	--	--	--	--	--	--	--	--	0.005	2	--
EPA 504.1	1,2-DIBROMOETHANE (ETHYLENE DIBROMIDE, EDB)	106-93-4	µg/L	--	12	0%	0.02	0.02	--	--	0.010	0.010	0.000	0.010	0.05	--	--	--	--	--	--	--	--	--	--	--
EPA 504.1	DIBROMOCHLOROPROPANE (DBCP)	96-12-8	µg/L	--	12	0%	0.02	0.02	--	--	0.010	0.010	0.000	0.010	0.2	--	--	--	--	--	0.0017	--	12	--	--	--
EPA 507	ALACHLOR	15972-60-8	µg/L	--	5	0%	0.5	0.5	--	--	0.250	0.250	--	0.250	2	--	--	--	--	--	4	--	--	--	--	--
EPA 507	ATRAZINE	1912-24-9	µg/L	--	5	0%	0.5	0.5	--	--	0.250	0.250	--	0.250	1	--	--	--	--	--	0.15	--	5	--	--	--
EPA 507	BROMACIL	314-40-9	µg/L	--	5	0%	0.5	0.5	--	--	0.250	0.250	--	0.250	--	--	--	--	--	--	--	--	--	--	--	--
EPA 507	BUTACHLOR	23184-66-9	µg/L	--	5	0%	0.38	0.38	--	--	0.190	0.190	--	0.190	--	--	--	--	--	--	--	--	--	--	--	--
EPA 507	DEMETON	8065-48-3	µg/L	--	5	0%	0.5	0.5	--	--	0.250	0.250	--	0.250	--	--	--	--	--	--	--	--	--	--	--	--
EPA 507	DIAZINON	333-41-5	µg/L	--	5	0%	0.25	0.25	--	--	0.125	0.125	--	0.125	--	--	--	--	--	--	--	--	--	6	--	--
EPA 507	DIMETHOATE	60-51-5	µg/L	--	5	0%	0.5	0.5	--	--	0.250	0.250	--	0.250	--	--	--	--	--	--	--	--	--	1	--	--
EPA 507	DISULFOTON	298-04-4	µg/L	--	5	0%	0.5	0.5	--	--	0.250	0.250	--	0.250	--	--	--	--	--	--	--	--	--	--	--	--
EPA 507	METOLACHLOR	51218-45-2	µg/L	--	5	0%	0.5	0.5	--	--	0.250	0.250	--	0.250	--	--	--	--	--	--	--	--	--	--	--	--
EPA 507	METRIBUZIN	21087-64-9	µg/L	--	5	0%	0.5	0.5	--	--	0.250	0.250	--	0.250	--	--	--	--	--	--	--	--	--	--	--	--
EPA 507	MEVINPHOS	7786-34-7	µg/L	--	5	0%	0.5	0.5	--	--	0.250	0.250	--	0.250	--	--	--	--	--	--	--	--	--	--	--	--
EPA 507	MOLINATE	2212-67-1	µg/L	--	5	0%	0.5	0.5	--	--	0.250	0.250	--	0.250	20	--	--	--	--	--	--	--	--	--	--	--
EPA 507	PROMETON	1610-18-0	µg/L	--	5	0%	0.5	0.5	--	--	0.250	0.250	--	0.250	--	--	--	--	--	--	--	--	--	--	--	--
EPA 507	PROMETRYN	7287-19-6	µg/L	--	5	0%	0.5	0.5	--	--	0.250	0.250	--	0.250	--	--	--	--	--	--	--	--	--	--	--	--
EPA 507	PRONAMIDE	23950-58-5	µg/L	--	5	0%	0.5	0.5	--	--	0.250	0.250	--	0.250	--	--	--	--	--	--	--	--	--	--	--	--
EPA 507	SIMAZINE	122-34-9	µg/L	--	5	0%	0.5	0.5	--	--	0.250	0.250	--	0.250	4	--	--	--	--	--	4	--	--	--	--	--
EPA 507	SIMETRYN	1014-70-6	µg/L	--	5	0%	0.5	0.5	--	--	0.250	0.250	--	0.250	--	--	--	--	--	--	--	--	--	--	--	--
EPA 507	TERBUTRYN	886-50-0	µg/L	--	5	0%	0.5	0.5	--	--	0.250	0.250	--	0.250	--	--	--	--	--	--	--	--	--	--	--	--
EPA 507	THIOBENCARB	28249-77-6	µg/L	--	5	0%	0.5	0.5	--	--	0.250	0.250	--	0.250	70	--	--	1	--	--	70	--	--	--	--	--
EPA 508	2,4'-DDD	53-19-0	µg/L	--	22	0%	0.05	0.05	--	--	0.025	0.025	0.000	0.025	--	--	--	--	--	--	--	--	--	--	--	--
EPA 508	2,4'-DDE	3424-82-6	µg/L	--	22	0%	0.05	0.05	--	--	0.025	0.025	0.000	0.025	--	--	--	--	--	--	--	--	--	--	--	--
EPA 508	2,4'-DDT	789-02-6	µg/L	--	22	0%	0.02	0.02	--	--	0.010	0.010	--	--	--	--	--	--	--	--	--	--	--	--	--	--
EPA 508	4,4-DDD	72-54-8	µg/L	--	22	0%	0.02	0.02	--	--	0.010	0.010	--	--	--	--	--	--	--	--	--	--	--	--	--	--
EPA 508	4,4-DDE	72-55-9	µg/L	--	22	0%	0.01	0.01	--	--	0.005	0.005	--	--	--	--	--	--	--	--	--	--	--	--	--	--
EPA 508	4,4-DDT	50-29-3	µg/L	--	22	0%	0.02	0.02	--	--	0.010	0.010	--	--	--	--	--	--	--	--	--	--	--	--	--	--

TABLE 3A-16
Summary Water Quality Statistics for JPL Monitoring Wells
Comprehensive Groundwater Monitoring Event (Dec 2002-Feb 2003)

															CA Primary MCL			CA Secondary MCL			CA PHG			DHS Action Level		
Method	Analyte	CAS	Unit	Number of Detects	Number of Samples	Frequency of Detection	Minimum Nondetect Value	Maximum Nondetect Value	Minimum Detected Value	Maximum Detected Value	Arithmetic Mean	Geometric Mean	Standard Deviation	Upper 95% Confidence	Criteria	# of Detects Exceeded	# of ND Exceeded	Criteria	# of Detects Exceeded	# of ND Exceeded	Criteria	# of Detects Exceeded	# of ND Exceeded	Criteria	# of Detects Exceeded	# of ND Exceeded
EPA 508	ALACHLOR	15972-60-8	µg/L	--	22	0%	0.1	0.1	--	--	0.050	0.050	0.000	0.050	2	--	--	--	--	--	4	--	--	--	--	--
EPA 508	ALDRIN	309-00-2	µg/L	--	22	0%	0.05	0.05	--	--	0.025	0.025	0.000	0.025	--	--	--	--	--	--	--	--	--	0.002	--	22
EPA 508	ALPHA-BHC	319-84-6	µg/L	--	22	0%	0.05	0.05	--	--	0.025	0.025	0.000	0.025	--	--	--	--	--	--	--	--	--	0.015	--	22
EPA 508	BENFLURALIN	1861-40-1	µg/L	--	22	0%	0.1	0.1	--	--	0.050	0.050	0.000	0.050	--	--	--	--	--	--	--	--	--	--	--	--
EPA 508	BETA-BHC	319-85-7	µg/L	--	22	0%	0.05	0.05	--	--	0.025	0.025	0.000	0.025	--	--	--	--	--	--	--	--	--	0.025	--	22
EPA 508	CAPTAN	133-06-2	µg/L	--	22	0%	0.1	0.1	--	--	0.050	0.050	0.000	0.050	--	--	--	--	--	--	--	--	--	1.5	--	--
EPA 508	CARBOPHENOTHION	786-19-6	µg/L	--	22	0%	0.05	0.05	--	--	0.025	0.025	0.000	0.025	--	--	--	--	--	--	--	--	--	--	--	--
EPA 508	CHLORDANE	57-74-9	µg/L	--	22	0%	0.05	0.05	--	--	0.025	0.025	0.000	0.025	0.1	--	--	--	--	--	0.03	--	22	--	--	--
EPA 508	CHLOROTHALONIL	1897-45-6	µg/L	--	22	0%	0.05	0.05	--	--	0.025	0.025	0.000	0.025	--	--	--	--	--	--	--	--	--	--	--	--
EPA 508	DELTA-BHC	319-86-8	µg/L	--	22	0%	0.05	0.05	--	--	0.025	0.025	0.000	0.025	--	--	--	--	--	--	--	--	--	0.025	--	22
EPA 508	DICOFOL	115-32-2	µg/L	--	22	0%	0.1	0.1	--	--	0.050	0.050	0.000	0.050	--	--	--	--	--	--	--	--	--	--	--	--
EPA 508	DIELDRIN	60-57-1	µg/L	--	22	0%	0.02	0.02	--	--	0.010	0.010	--	--	--	--	--	--	--	--	--	--	--	0.002	--	22
EPA 508	DMPA	299-85-4	µg/L	--	22	0%	0.1	0.1	--	--	0.050	0.050	0.000	0.050	--	--	--	--	--	--	--	--	--	--	--	--
EPA 508	ENDOSULFAN I	959-98-8	µg/L	--	22	0%	0.02	0.02	--	--	0.010	0.010	--	--	--	--	--	--	--	--	--	--	--	--	--	--
EPA 508	ENDOSULFAN II	33213-65-9	µg/L	--	22	0%	0.01	0.01	--	--	0.005	0.005	--	--	--	--	--	--	--	--	--	--	--	--	--	--
EPA 508	ENDOSULFAN SULFATE	1031-07-8	µg/L	--	22	0%	0.05	0.05	--	--	0.025	0.025	0.000	0.025	--	--	--	--	--	--	--	--	--	--	--	--
EPA 508	ENDRIN	72-20-8	µg/L	--	22	0%	0.05	0.05	--	--	0.025	0.025	0.000	0.025	2	--	--	--	--	--	1.8	--	--	--	--	--
EPA 508	ENDRIN ALDEHYDE	7421-93-4	µg/L	--	22	0%	0.05	0.05	--	--	0.025	0.025	0.000	0.025	--	--	--	--	--	--	--	--	--	--	--	--
EPA 508	ENDRIN KETONE	53494-70-5	µg/L	--	22	0%	0.05	0.05	--	--	0.025	0.025	0.000	0.025	--	--	--	--	--	--	--	--	--	--	--	--
EPA 508	GAMMA- BHC (LINDANE)	58-89-9	µg/L	--	22	0%	0.05	0.05	--	--	0.025	0.025	0.000	0.025	0.2	--	--	--	--	--	0.032	--	22	--	--	--
EPA 508	HEPTACHLOR	76-44-8	µg/L	--	22	0%	0.01	0.01	--	--	0.005	0.005	--	--	0.01	--	--	--	--	--	0.008	--	22	--	--	--
EPA 508	HEPTACHLOR EPOXIDE	1024-57-3	µg/L	--	22	0%	0.01	0.01	--	--	0.005	0.005	--	--	0.01	--	--	--	--	--	0.006	--	22	--	--	--
EPA 508	HEXACHLOROBENZENE	118-74-1	µg/L	--	22	0%	0.05	0.05	--	--	0.025	0.025	0.000	0.025	1	--	--	--	--	--	--	--	--	--	--	--
EPA 508	METHOXYCHLOR	72-43-5	µg/L	--	22	0%	0.05	0.05	--	--	0.025	0.025	0.000	0.025	30	--	--	--	--	--	30	--	--	--	--	--
EPA 508	NITROFEN	1836-75-5	µg/L	--	22	0%	0.05	0.05	--	--	0.025	0.025	0.000	0.025	--	--	--	--	--	--	--	--	--	--	--	--
EPA 508	PCB-1016	12674-11-2	µg/L	--	22	0%	0.5	0.5	--	--	0.250	0.250	--	0.250	--	--	--	--	--	--	--	--	--	--	--	--
EPA 508	PCB-1221	11104-28-2	µg/L	--	22	0%	0.5	0.5	--	--	0.250	0.250	--	0.250	--	--	--	--	--	--	--	--	--	--	--	--
EPA 508	PCB-1232	11141-16-5	µg/L	--	22	0%	0.5	0.5	--	--	0.250	0.250	--	0.250	--	--	--	--	--	--	--	--	--	--	--	--
EPA 508	PCB-1242	53469-21-9	µg/L	--	22	0%	0.5	0.5	--	--	0.250	0.250	--	0.250	--	--	--	--	--	--	--	--	--	--	--	--
EPA 508	PCB-1248	12672-29-6	µg/L	--	22	0%	0.5	0.5	--	--	0.250	0.250	--	0.250	--	--	--	--	--	--	--	--	--	--	--	--
EPA 508	PCB-1254	11097-69-1	µg/L	--	22	0%	0.5	0.5	--	--	0.250	0.250	--	0.250	--	--	--	--	--	--	--	--	--	--	--	--
EPA 508	PCB-1260	11096-82-5	µg/L	--	22	0%	0.5	0.5	--	--	0.250	0.250	--	0.250	--	--	--	--	--	--	--	--	--	--	--	--
EPA 508	PCNB	82-68-8	µg/L	--	22	0%	0.05	0.05	--	--	0.025	0.025	0.000	0.025	--	--	--	--	--	--	--	--	--	--	--	--
EPA 508	PROPACHLOR	1918-16-7	µg/L	1	22	5%	0.1	0.1	0.28	0.28	0.060	0.054	0.049	0.078	--	--	--	--	--	--	--	--	--	--	--	--
EPA 508	TOXAPHENE	8001-35-2	µg/L	--	22	0%	0.5	0.5	--	--	0.250	0.250	--	0.250	3	--	--	--	--	--	--	--	--	--	--	--
EPA 524.2	1,1,1,2-TETRACHLOROETHANE	630-20-6	µg/L	--	22	0%	0.5	0.5	--	--	0.250	0.250	--	0.250	--	--	--	--	--	--	--	--	--	--	--	--
EPA 524.2	1,1,1-TRICHLOROETHANE	71-55-6	µg/L	--	22	0%	0.5	0.5	--	--	0.250	0.250	--	0.250	200	--	--	--	--	--	--	--	--	--	--	--
EPA 524.2	1,1,2,2-TETRACHLOROETHANE	79-34-5	µg/L	--	22	0%	0.5	0.5	--	--	0.250	0.250	--	0.250	1	--	--	--	--	--	--	--	--	--	--	--
EPA 524.2	1,1,2-TRICHLOROETHANE	79-00-5	µg/L	--	22	0%	0.5	0.5	--	--	0.250	0.250	--	0.250	5	--	--	--	--	--	--	--	--	--	--	--
EPA 524.2	1,1,2-TRICHLOROTRIFLUOROETHANE	76-13-1	µg/L	2	22	9%	0.5	0.5	2.1	5.9	0.591	0.318	1.250	1.049	1200	--	--	--	--	--	4000	--	--	--	--	--
EPA 524.2	1,1-DICHLOROETHANE	75-34-3	µg/L	4	22	18%	0.3	0.3	0.3	0.5	0.200	0.181	0.114	0.242	5	--	--	--	--	--	--	--	--	--	--	--
EPA 524.2	1,1-DICHLOROETHENE	75-35-4	µg/L	2	22	9%	0.5	0.5	0.3	8.2	0.614	0.295	1.694	1.235	6	1	--	--	--	--	10	--	--	--	--	--
EPA 524.2	1,2,3-TRICHLOROBENZENE	87-61-6	µg/L	--	22	0%	0.5	0.5	--	--	0.250	0.250	--	0.250	--	--	--	--	--	--	--	--	--	--	--	--
EPA 524.2	1,2,4-TRICHLOROBENZENE	120-82-1	µg/L	--	22	0%	0.5	0.5	--	--	0.250	0.250	--	0.250	5	--	--	--	--	--	5	--	--	--	--	--
EPA 524.2	1,2,4-TRIMETHYLBENZENE	95-63-6	µg/L	--	22	0%	0.5	0.5	--	--	0.250	0.250	--	0.250	--	--	--	--	--	--	--	--	--	330	--	--
EPA 524.2	1,2-DIBROMOETHANE (ETHYLENE DIBROMIDE, EDB)	106-93-4	µg/L	--	22	0%	0.5	0.5	--	--	0.250	0.250	--	0.250	0.05	--	22	--	--	--	--	--	--	--	--	--
EPA 524.2	1,2-DICHLOROBENZENE (O-DICHLOROBENZENE)	95-50-1	µg/L	--	22	0%	0.5	0.5	--	--	0.250	0.250	--	0.250	600	--	--	--	--	--	600	--	--	--	--	--
EPA 524.2	1,2-DICHLOROETHANE	107-06-2	µg/L	--	22	0%	0.5	0.5	--	--	0.250	0.250	--	0.250	5	--	--	--	--	--	0.4	--	22	--	--	--
EPA 524.2	1,2-DICHLOROPROPANE	78-87-5	µg/L	--	22	0%	0.5	0.5	--	--	0.250	0.250	--	0.250	5	--	--	--	--	--	0.5	--	--	--	--	--
EPA 524.2	1,3,5-TRIMETHYLBENZENE	108-67-8	µg/L	--	22	0%	0.5	0.5	--	--	0.250	0.250	--	0.250	--	--	--	--	--	--	--	--	--	330	--	--
EPA 524.2	1,3-DICHLOROPROPANE	142-28-9	µg/L	--	22	0%	0.5	0.5	--	--	0.250	0.250	--	0.250	--	--	--	--	--	--	--	--	--	--	--	--
EPA 524.2	1,4-DICHLOROBENZENE (PARA-DICHLOROBENZENE)	106-46-7	µg/L	--	22	0%	0.5	0.5	--	--	0.250	0.250	--	0.250	5	--	--	--	--	--	6	--	--	--	--	--
EPA 524.2	2,2-DICHLOROPROPANE	594-20-7	µg/L	--	22	0%	0.5	0.5	--	--	0.250	0.250	--	0.250	--	--	--	--	--	--	--	--	--	--	--	--
EPA 524.2	2-BUTANONE (METHYL ETHYL KETONE, MEK)	78-93-3	µg/L	--	22	0%	5	5	--	--	2.500	2.500	--	2.500	--	--	--	--	--	--	--	--	--	--	--	--
EPA 524.2	2-CHLOROETHYLVINYLETHER	110-75-8	µg/L	--	22	0%	5	5	--	--	2.500	2.500	--	2.500	--	--	--	--	--	--	--	--	--	--	--	--
EPA 524.2	2-CHLOROTOLUENE	95-49-8	µg/L	--	22	0%	0.5	0.5	--	--	0.250	0.250	--	0.250	--	--	--	--	--	--	--	--	--	140	--	--
EPA 524.2	2-HEXANONE	591-78-6	µg/L	--	22	0%	2	2	--	--	1.000	1.000	--	1.000	--	--	--	--	--	--	--	--	--	--	--	--
EPA 524.2	4-CHLOROTOLUENE	106-43-4	µg/L	--	22	0%	0.5	0.5	--	--	0.250	0.250	--	0.250	--	--	--	--	--	--	--	--	--	140	--	--
EPA 524.2	4-METHYL-2-PENTANONE (MIBK)	108-10-1	µg/L	--	22	0%	5	5	--	--	2.500	2.500	--	2.500	--	--	--	--	--	--	--	--	--	120	--	--
EPA 524.2	ACETONE	67-64-1	µg/L	--	22	0%	5	8.4	--	--	2.655	2.621	0.500	2.838	--	--	--	--	--	--	--	--	--	--	--	--
EPA 524.2	ACROLEIN	107-02-8	µg/L	--	22	0%	50	50	--	--	25.000	25.000	--	25.000	--	--	--	--	--	--	--	--	--	--	--	--
EPA 524.2	ACRYLONITRILE	107-13-1	µg/L	--	22	0%	10	10	--	--	5.000	5.000	--	5.000	--	--	--	--	--	--	--	--	--	--	--	--
EPA 524.2	BENZENE	71-43-2	µg/L	--	22	0%	0.5	0.5	--	--	0.250	0.250	--	0.250	1	--	--	--	--	--	0.15	--	22	--	--	--
EPA 524.2	BROMOBENZENE	108-86-1	µg/L	--	22	0%	0.5	0.5	--	--	0.250	0.250	--	0.250	--	--	--	--	--	--	--	--	--	--	--	--
EPA 524.2	BROMOCHLOROMETHANE	74-97-5	µg/L	1	22	5%	1	1	18	18	1.295	0.588	3.731	2.664	--	--	--	--	--	--	--	--	--	--	--	--
EPA 524.2	BROMODICHLOROMETHANE	75-27-4	µg/L	--	22	0%	0.5	0.5	--	--	0.250	0.250	--	0.250	--	--	--	--	--	--	--	--	--	--	--	--
EPA 524.2	BROMOFORM	75-25-2	µg/L	--	22	0%	0.5	0.5	--	--	0.250	0.250	--	0.250	--	--	--	--	--	--	--	--	--	--	--	--
EPA 524.2	BROMOMETHANE (METHYL BROMIDE)	74-83-9	µg/L	--	22	0%	0.5	0.5	--	--	0.250	0.250	--	0.250	--	--	--	--	--	--	--	--	--	--	--	--
EPA 524.2	CARBON DISULFIDE	75-15-0	µg/L	--	22	0%	2	2	--	--	1.000	1.000	--	1.000	--	--	--	--	--	--	--	--	--	160	--	--
EPA 524.2	CARBON TETRACHLORIDE	56-23-5	µg/L	7	22	32%	0.2	0.2	0.62	157	9.369	0.413	33.260	21.559	0.5	7	--	--	--	--	0.1	7	15	--	--	--

TABLE 3A-16
Summary Water Quality Statistics for JPL Monitoring Wells
Comprehensive Groundwater Monitoring Event (Dec 2002-Feb 2003)

															CA Primary MCL			CA Secondary MCL			CA PHG			DHS Action Level		
Method	Analyte	CAS	Unit	Number of Detects	Number of Samples	Frequency of Detection	Minimum Nondetect Value	Maximum Nondetect Value	Minimum Detected Value	Maximum Detected Value	Arithmetic Mean	Geometric Mean	Standard Deviation	Upper 95% Confidence	Criteria	# of Detects Exceeded	# of ND Exceeded	Criteria	# of Detects Exceeded	# of ND Exceeded	Criteria	# of Detects Exceeded	# of ND Exceeded	Criteria	# of Detects Exceeded	# of ND Exceeded
EPA 524.2	CHLOROBENZENE	108-90-7	µg/L	--	22	0%	0.5	0.5	--	--	0.250	0.250	--	0.250	70	--	--	--	--	--	--	--	--	--	--	--
EPA 524.2	CHLORODIBROMOMETHANE (THM)	124-48-1	µg/L	--	22	0%	0.5	0.5	--	--	0.250	0.250	--	0.250	--	--	--	--	--	--	--	--	--	--	--	--
EPA 524.2	CHLOROETHANE	75-00-3	µg/L	--	22	0%	1	1	--	--	0.500	0.500	--	0.500	--	--	--	--	--	--	--	--	--	--	--	--
EPA 524.2	CHLOROFORM	67-66-3	µg/L	18	22	82%	0.3	0.3	0.4	16.6	1.780	0.832	3.428	3.038	100	--	--	--	--	--	--	--	--	--	--	--
EPA 524.2	CHLOROMETHANE (METHYL CHLORIDE)	74-87-3	µg/L	--	22	0%	0.5	0.5	--	--	0.250	0.250	--	0.250	--	--	--	--	--	--	--	--	--	--	--	--
EPA 524.2	CIS-1,2-DICHLOROETHENE	156-59-2	µg/L	2	22	9%	0.5	0.5	0.4	2.7	0.368	0.285	0.522	0.560	6	--	--	--	--	--	--	--	--	--	--	--
EPA 524.2	CIS-1,3-DICHLOROPROPENE	10061-01-5	µg/L	--	22	0%	0.5	0.5	--	--	0.250	0.250	--	0.250	--	--	--	--	--	--	--	--	--	--	--	--
EPA 524.2	DI-ISOPROPYL ETHER	108-20-3	µg/L	--	22	0%	0.5	0.52	--	--	0.251	0.251	0.003	0.252	--	--	--	--	--	--	--	--	--	--	--	--
EPA 524.2	DIBROMOMETHANE	74-95-3	µg/L	--	22	0%	0.5	0.5	--	--	0.250	0.250	--	0.250	--	--	--	--	--	--	--	--	--	--	--	--
EPA 524.2	DICHLORODIFLUOROMETHANE (FREON 112)	75-71-8	µg/L	--	22	0%	0.5	0.5	--	--	0.250	0.250	--	0.250	--	--	--	--	--	--	--	--	--	1000	--	--
EPA 524.2	ETHYL-TERT-BUTYL ETHER (ETBE)	637-92-3	µg/L	--	22	0%	3	3	--	--	1.500	1.500	--	1.500	--	--	--	--	--	--	--	--	--	--	--	--
EPA 524.2	ETHYLBENZENE	100-41-4	µg/L	1	22	5%	0.5	0.5	1.1	1.1	0.289	0.267	0.181	0.355	300	--	--	--	--	--	300	--	--	--	--	--
EPA 524.2	HEXACHLOROBUTADIENE	87-68-3	µg/L	--	22	0%	0.5	0.5	--	--	0.250	0.250	--	0.250	--	--	--	--	--	--	--	--	--	--	--	--
EPA 524.2	ISOPROPYLBENZENE (CUMENE)	98-82-8	µg/L	--	22	0%	0.5	0.5	--	--	0.250	0.250	--	0.250	--	--	--	--	--	--	--	--	--	770	--	--
EPA 524.2	M-XYLENE	108-38-3	µg/L	--	22	0%	0.5	0.5	--	--	0.250	0.250	--	0.250	--	--	--	--	--	--	--	--	--	--	--	--
EPA 524.2	METHYL ACETATE	79-20-9	µg/L	--	22	0%	10	10	--	--	5.000	5.000	--	5.000	--	--	--	--	--	--	--	--	--	--	--	--
EPA 524.2	METHYL-T-BUTYL ETHER (MTBE)	1634-04-4	µg/L	--	22	0%	0.5	0.5	--	--	0.250	0.250	--	0.250	13	--	--	5	--	--	13	--	--	--	--	--
EPA 524.2	METHYLENE CHLORIDE (DICHLOROMETHANE)	75-09-2	µg/L	6	22	20%	0.5	10.1	0.400	11300	856.000	1.161	23.917	18.321	5	3	2	--	--	--	4	3	3	--	--	--
EPA 524.2	N-BUTYLBENZENE	104-51-8	µg/L	--	22	0%	0.5	0.5	--	--	0.250	0.250	--	0.250	--	--	--	--	--	--	--	--	--	260	--	--
EPA 524.2	N-PROPYLBENZENE	103-65-1	µg/L	--	22	0%	0.5	0.5	--	--	0.250	0.250	--	0.250	--	--	--	--	--	--	--	--	--	260	--	--
EPA 524.2	NAPHTHALENE	91-20-3	µg/L	--	22	0%	0.5	0.5	--	--	0.250	0.250	--	0.250	--	--	--	--	--	--	--	--	--	170	--	--
EPA 524.2	O-XYLENE	95-47-6	µg/L	--	22	0%	0.2	0.2	--	--	0.100	0.100	0.000	0.100	1750	--	--	--	--	--	--	--	--	--	--	--
EPA 524.2	P-ISOPROPYLTOLUENE	99-87-6	µg/L	--	22	0%	0.5	0.5	--	--	0.250	0.250	--	0.250	--	--	--	--	--	--	--	--	--	--	--	--
EPA 524.2	SEC-BUTYLBENZENE	135-98-8	µg/L	--	22	0%	0.5	0.5	--	--	0.250	0.250	--	0.250	--	--	--	--	--	--	--	--	--	260	--	--
EPA 524.2	STYRENE	100-42-5	µg/L	1	22	5%	0.5	0.5	0.5	0.5	0.261	0.258	0.053	0.281	100	--	--	--	--	--	--	--	--	--	--	--
EPA 524.2	TERT-AMYL-METHYL ETHER (TAME)	994-05-8	µg/L	--	22	0%	3	3	--	--	1.500	1.500	--	1.500	--	--	--	--	--	--	--	--	--	--	--	--
EPA 524.2	TERT-BUTYLBENZENE	98-06-6	µg/L	--	22	0%	0.5	0.5	--	--	0.250	0.250	--	0.250	--	--	--	--	--	--	--	--	--	260	--	--
EPA 524.2	TERTIARY BUTYL ALCOHOL (TBA)	75-65-0	µg/L	--	22	0%	2	11	--	--	2.100	1.940	1.114	2.509	--	--	--	--	--	--	--	--	--	12	--	--
EPA 524.2	TETRACHLOROETHENE (PCE)	127-18-4	µg/L	12	22	55%	0.5	0.5	0.3	21.2	2.836	0.752	5.879	4.971	5	4	--	--	--	--	0.06	12	10	--	--	--
EPA 524.2	TETRAHYDROFURAN	109-99-9	µg/L	--	22	0%	0.5	2.7	--	--	1.084	1.048	0.200	1.158	--	--	--	--	--	--	--	--	--	--	--	--
EPA 524.2	TOLUENE	108-88-3	µg/L	--	22	0%	0.5	0.5	--	--	0.250	0.250	--	0.250	150	--	--	--	--	--	150	--	--	--	--	--
EPA 524.2	TRANS-1,2-DICHLOROETHENE	156-60-5	µg/L	--	22	0%	0.5	0.5	--	--	0.250	0.250	--	0.250	10	--	--	--	--	--	--	--	--	--	--	--
EPA 524.2	TRANS-1,3-DICHLOROPROPENE	10061-02-6	µg/L	--	22	0%	0.5	0.5	--	--	0.250	0.250	--	0.250	--	--	--	--	--	--	--	--	--	--	--	--
EPA 524.2	TRICHLOROETHENE (TCE)	79-01-6	µg/L	16	22	73%	0.5	0.5	0.5	7.8	2.002	1.023	2.400	2.883	5	3	--	--	--	--	0.8	12	--	--	--	--
EPA 524.2	TRICHLOROFLUOROMETHANE	75-69-4	µg/L	1	22	5%	0.5	0.5	0.4	0.4	0.257	0.255	0.032	0.269	150	--	--	--	--	--	700	--	--	--	--	--
EPA 524.2	VINYL ACETATE	108-05-4	µg/L	--	22	0%	2	2	--	--	1.000	1.000	--	1.000	--	--	--	--	--	--	--	--	--	--	--	--
EPA 524.2	VINYL CHLORIDE (CHLOROETHANE)	75-01-4	µg/L	--	22	0%	0.5	0.5	--	--	0.250	0.250	--	0.250	0.5	--	--	--	--	--	0.05	--	22	--	--	--
EPA 524.2	XYLENES (TOTAL)	--	µg/L	--	19	0%	0.5	0.5	--	--	0.250	0.250	--	0.250	1750	--	--	--	--	--	1800	--	--	--	--	--
EPA 531.1	3-HYDROXYCARBOFURAN	16655-82-6	µg/L	--	4	0%	3	3	--	--	1.500	1.500	--	1.500	--	--	--	--	--	--	--	--	--	--	--	--
EPA 531.1	ALDICARB	116-06-3	µg/L	--	4	0%	3	3	--	--	1.500	1.500	--	1.500	--	--	--	--	--	--	--	--	--	7	--	--
EPA 531.1	ALDICARB SULFONE	1646-88-4	µg/L	--	4	0%	4	4	--	--	2.000	2.000	--	2.000	--	--	--	--	--	--	--	--	--	--	--	--
EPA 531.1	ALDICARB SULFOXIDE	1646-87-3	µg/L	--	4	0%	3	3	--	--	1.500	1.500	--	1.500	--	--	--	--	--	--	--	--	--	--	--	--
EPA 531.1	CARBARYL	63-25-2	µg/L	--	4	0%	5	5	--	--	2.500	2.500	--	2.500	--	--	--	--	--	--	--	--	--	700	--	--
EPA 531.1	CARBOFURAN	1563-66-2	µg/L	--	4	0%	5	5	--	--	2.500	2.500	--	2.500	18	--	--	--	--	--	1.7	--	4	--	--	--
EPA 531.1	METHIOCARB	2032-65-7	µg/L	--	4	0%	5	5	--	--	2.500	2.500	--	2.500	--	--	--	--	--	--	--	--	--	--	--	--
EPA 531.1	METHOMYL	16752-77-5	µg/L	--	4	0%	2	2	--	--	1.000	1.000	--	1.000	--	--	--	--	--	--	--	--	--	--	--	--
EPA 531.1	OXAMYL	23135-22-0	µg/L	--	4	0%	5	5	--	--	2.500	2.500	--	2.500	50	--	--	--	--	--	50	--	--	--	--	--
EPA 531.1	PROPOXUR	114-26-1	µg/L	--	4	0%	5	5	--	--	2.500	2.500	--	2.500	--	--	--	--	--	--	--	--	--	--	--	--
EPA 547	GLYPHOSATE	1071-83-6	µg/L	--	5	0%	10	10	--	--	5.000	5.000	--	5.000	700	--	--	--	--	--	1000	--	--	--	--	--
EPA 548	ENDOTHALL	145-73-3	µg/L	--	5	0%	5	500	--	--	52.000	6.280	110.685	157.537	100	--	1	--	--	--	580	--	--	--	--	--
EPA 549.1	DIQUAT	231-36-7	µg/L	--	4	0%	0.4	0.4	--	--	0.200	0.200	--	0.200	20	--	--	--	--	--	15	--	--	--	--	--
EPA 549.1	PARAQUAT	4685-14-7	µg/L	--	4	0%	0.4	0.4	--	--	0.200	0.200	--	0.200	--	--	--	--	--	--	--	--	--	--	--	--
EPA 551.1	1,1,1-TRICHLORO-2-PROPANONE	918-00-3	µg/L	--	6	0%	0.32	1	--	--	0.443	0.414	0.139	0.558	--	--	--	--	--	--	--	--	--	--	--	--
EPA 551.1	1,1-DICHLOROPROPANONE	513-88-2	µg/L	--	6	0%	0.21	1	--	--	0.434	0.385	0.161	0.567	--	--	--	--	--	--	--	--	--	--	--	--
EPA 551.1	BROMOCHLOROACETONITRILE	83463-62-1	µg/L	--	6	0%	1.8	5	--	--	2.233	2.109	0.653	2.771	--	--	--	--	--	--	--	--	--	--	--	--
EPA 551.1	BROMODICHLOROMETHANE	75-27-4	µg/L	--	6	0%	0.27	0.5	--	--	0.231	0.226	0.047	0.269	--	--	--	--	--	--	--	--	--	--	--	--
EPA 551.1	BROMOFORM	75-25-2	µg/L	--	6	0%	0.26	0.5	--	--	0.230	0.224	0.049	0.270	--	--	--	--	--	--	--	--	--	--	--	--
EPA 551.1	CHLORODIBROMOMETHANE (THM)	124-48-1	µg/L	--	6	0%	0.21	0.5	--	--	0.226	0.216	0.059	0.275	--	--	--	--	--	--	--	--	--	--	--	--
EPA 551.1	CHLOROFORM	67-66-3	µg/L	4	6	67%	0.5	0.5	1.2	26	5.883	1.652	10.067	14.165	100	--	--	--	--	--	--	--	--	--	--	--
EPA 551.1	CHLOROPICRIN	76-06-2	µg/L	--	6	0%	0.34	1	--	--	0.445	0.418	0.135	0.556	--	--	--	--	--	--	--	--	--	56	--	--
EPA 551.1	DIBROMOACETONITRILE	3252-43-5	µg/L	--	6	0%	0.49	2	--	--	0.874	0.791	0.308	1.128	--	--	--	--	--	--	--	--	--	--	--	--
EPA 551.1	DICHLOROACETONITRILE	3018-12-0	µg/L	--	6	0%	0.21	1	--	--	0.434	0.385	0.161	0.567	--	--	--	--	--	--	--	--	--	--	--	--
EPA 551.1	TOTAL TRIHALOMETHANES	--	µg/L	4	6	67%	0.5	0.5	1.25	27	6.075	1.689	10.455	14.676	100	--	--	--	--	--	--	--	--	--	--	--
EPA 551.1	TRICHLOROACETONITRILE	545-06-2	µg/L	--	6	0%	0.81	2	--	--	0.901	0.860	0.243	1.101	--	--	--	--	--	--	--	--	--	--	--	--
EPA 8015M	ETHYLENE GLYCOL	107-21-1	mg/L	--	6	0%	5	5	--	--	2.500	2.500	--	2.500	--	--	--	--	--	--	--	--	--	--	--	--
EPA 8015M	TPH-DIESEL	11-84-7	mg/L	3	12	25%	0.96	1	0.01	0.02	0.365	0.194	0.212	0.475	--	--	--	--	--	--	--	--	--	--	--	--
EPA 8015M	TPH-GASOLINE	8006-61-9	mg/L	--	12	0%	0.05	0.1	--	--	0.048	0.047	0.007	0.052	--	--	--	--	--	--	--	--	--	--	--	--
EPA 8015M	TPH-MOTOR OILS	--	mg/L	2	12	17%	0.96	1	0.03	0.09	0.412	0.333	0.165	0.497	--	--	--	--	--	--	--	--	--	--	--	--
EPA 8141A	BOLSTAR	35400-43-2	µg/L	--	5	0%	0.1	0.1	--	--	0.050	0.050	0.000	0.050	--	--	--	--	--	--	--	--	--	--	--	--
EPA 8141A	CHLORPYRIFOS	2921-88-2	µg/L	--	5	0%	0.05	0.05	--	--	0.025	0.025	0.000	0.025	--	--	--	--	--	--	--	--	--	--	--	--

TABLE 3A-16
Summary Water Quality Statistics for JPL Monitoring Wells
Comprehensive Groundwater Monitoring Event (Dec 2002-Feb 2003)

															CA Primary MCL			CA Secondary MCL			CA PHG			DHS Action Level		
Method	Analyte	CAS	Unit	Number of Detects	Number of Samples	Frequency of Detection	Minimum Nondetect Value	Maximum Nondetect Value	Minimum Detected Value	Maximum Detected Value	Arithmetic Mean	Geometric Mean	Standard Deviation	Upper 95% Confidence	Criteria	# of Detects Exceeded	# of ND Exceeded	Criteria	# of Detects Exceeded	# of ND Exceeded	Criteria	# of Detects Exceeded	# of ND Exceeded	Criteria	# of Detects Exceeded	# of ND Exceeded
EPA 8141A	COUMAPHOS	56-72-4	µg/L	--	5	0%	0.2	0.2	--	--	0.100	0.100	0.000	0.100	--	--	--	--	--	--	--	--	--	--	--	--
EPA 8141A	DEMETON	8065-48-3	µg/L	--	5	0%	0.2	0.2	--	--	0.100	0.100	0.000	0.100	--	--	--	--	--	--	--	--	--	--	--	--
EPA 8141A	DIAZINON	333-41-5	µg/L	--	5	0%	0.05	0.05	--	--	0.025	0.025	0.000	0.025	--	--	--	--	--	--	--	--	--	6	--	--
EPA 8141A	DICHLORVOS	62-73-7	µg/L	--	5	0%	0.2	0.2	--	--	0.100	0.100	0.000	0.100	--	--	--	--	--	--	--	--	--	--	--	--
EPA 8141A	DIMETHOATE	60-51-5	µg/L	--	5	0%	0.1	0.1	--	--	0.050	0.050	0.000	0.050	--	--	--	--	--	--	--	--	--	1	--	--
EPA 8141A	DISULFOTON	298-04-4	µg/L	--	5	0%	0.1	0.1	--	--	0.050	0.050	0.000	0.050	--	--	--	--	--	--	--	--	--	--	--	--
EPA 8141A	EPN	2104-64-5	µg/L	--	5	0%	0.1	0.1	--	--	0.050	0.050	0.000	0.050	--	--	--	--	--	--	--	--	--	--	--	--
EPA 8141A	EPTC	759-94-4	µg/L	--	5	0%	0.1	0.1	--	--	0.050	0.050	0.000	0.050	--	--	--	--	--	--	--	--	--	--	--	--
EPA 8141A	ETHION	563-12-2	µg/L	--	5	0%	0.1	0.1	--	--	0.050	0.050	0.000	0.050	--	--	--	--	--	--	--	--	--	--	--	--
EPA 8141A	ETHOPROP	13194-48-4	µg/L	--	5	0%	0.1	0.1	--	--	0.050	0.050	0.000	0.050	--	--	--	--	--	--	--	--	--	--	--	--
EPA 8141A	FENSULFOTHION	115-90-2	µg/L	--	5	0%	0.5	0.5	--	--	0.250	0.250	--	0.250	--	--	--	--	--	--	--	--	--	--	--	--
EPA 8141A	FENTHION	55-38-9	µg/L	--	5	0%	0.1	0.1	--	--	0.050	0.050	0.000	0.050	--	--	--	--	--	--	--	--	--	--	--	--
EPA 8141A	GUTHION	86-50-0	µg/L	--	5	0%	1	1	--	--	0.500	0.500	--	0.500	--	--	--	--	--	--	--	--	--	--	--	--
EPA 8141A	MALATHION	121-75-5	µg/L	--	5	0%	0.1	0.1	--	--	0.050	0.050	0.000	0.050	--	--	--	--	--	--	--	--	--	--	--	--
EPA 8141A	MERPHOS	150-50-5	µg/L	--	5	0%	0.1	0.1	--	--	0.050	0.050	0.000	0.050	--	--	--	--	--	--	--	--	--	--	--	--
EPA 8141A	METHYL PARATHION	298-00-0	µg/L	--	5	0%	0.1	0.1	--	--	0.050	0.050	0.000	0.050	--	--	--	--	--	--	--	--	--	--	--	--
EPA 8141A	MEVINPHOS	7786-34-7	µg/L	--	5	0%	0.7	0.7	--	--	0.350	0.350	--	0.350	--	--	--	--	--	--	--	--	--	--	--	--
EPA 8141A	NALED	300-76-5	µg/L	--	5	0%	0.5	0.5	--	--	0.250	0.250	--	0.250	--	--	--	--	--	--	--	--	--	--	--	--
EPA 8141A	PARATHION	56-38-2	µg/L	--	5	0%	0.1	0.1	--	--	0.050	0.050	0.000	0.050	--	--	--	--	--	--	--	--	--	--	--	--
EPA 8141A	PHORATE	298-02-2	µg/L	--	5	0%	0.1	0.1	--	--	0.050	0.050	0.000	0.050	--	--	--	--	--	--	--	--	--	--	--	--
EPA 8141A	PROWL	40487-42-1	µg/L	--	5	5%	0.1	0.1	--	--	0.050	0.050	0.000	0.050	--	--	--	--	--	--	--	--	--	--	--	--
EPA 8141A	RONNEL	299-84-3	µg/L	--	5	0%	0.1	0.1	--	--	0.050	0.050	0.000	0.050	--	--	--	--	--	--	--	--	--	--	--	--
EPA 8141A	S,S,S-TRIBUTYLPHOSPHOROTRITHIOATE	78-48-8	µg/L	--	5	0%	0.1	0.1	--	--	0.050	0.050	0.000	0.050	--	--	--	--	--	--	--	--	--	--	--	--
EPA 8141A	STIROPHOS	22248-79-9	µg/L	--	5	0%	0.1	0.1	--	--	0.050	0.050	0.000	0.050	--	--	--	--	--	--	--	--	--	--	--	--
EPA 8141A	SULFOTEPP	3689-24-5	µg/L	--	5	0%	0.1	0.1	--	--	0.050	0.050	0.000	0.050	--	--	--	--	--	--	--	--	--	--	--	--
EPA 8141A	TOKUTHION	34643-46-4	µg/L	--	5	0%	0.1	0.1	--	--	0.050	0.050	0.000	0.050	--	--	--	--	--	--	--	--	--	--	--	--
EPA 8141A	TRICHLORONATE	327-98-0	µg/L	--	5	0%	0.1	0.1	--	--	0.050	0.050	0.000	0.050	--	--	--	--	--	--	--	--	--	--	--	--
EPA 8141A	TRIFLURALIN	1582-09-8	µg/L	--	5	0%	0.1	0.1	--	--	0.050	0.050	0.000	0.050	--	--	--	--	--	--	--	--	--	--	--	--
EPA 8151A	2,4,5-T	93-76-5	µg/L	--	6	0%	0.22	0.23	--	--	0.112	0.112	0.003	0.114	--	--	--	--	--	--	--	--	--	--	--	--
EPA 8151A	2,4,5-TP	93-72-1	µg/L	--	6	0%	0.096	0.1	--	--	0.049	0.049	0.001	0.050	50	--	--	--	--	--	--	--	--	--	--	--
EPA 8151A	2,4-D	94-75-7	µg/L	--	6	0%	0.48	0.5	--	--	0.243	0.243	0.005	0.248	70	--	--	--	--	--	70	--	--	--	--	--
EPA 8151A	3,5-DICHLOROBENZOIC ACID	51-36-5	µg/L	--	2	0%	0.48	0.5	--	--	0.245	0.245	0.007	0.277	--	--	--	--	--	--	--	--	--	--	--	--
EPA 8151A	4-NITROPHENOL	100-02-7	µg/L	--	2	0%	0.48	0.5	--	--	0.245	0.245	0.007	0.277	--	--	--	--	--	--	--	--	--	--	--	--
EPA 8151A	ACIFLUORFEN	50594-66-6	µg/L	--	2	0%	0.96	1	--	--	0.490	0.490	0.014	0.553	--	--	--	--	--	--	--	--	--	--	--	--
EPA 8151A	BENTAZON	25057-89-0	µg/L	--	6	0%	0.48	0.5	--	--	0.243	0.243	0.005	0.248	18	--	--	--	--	--	200	--	--	--	--	--
EPA 8151A	CHLORAMBEN	133-90-4	µg/L	--	2	0%	0.48	0.5	--	--	0.245	0.245	0.007	0.277	--	--	--	--	--	--	--	--	--	--	--	--
EPA 8151A	DACTHAL	1861-32-1	µg/L	--	6	0%	0.16	0.17	--	--	0.082	0.082	0.003	0.084	--	--	--	--	--	--	--	--	--	--	--	--
EPA 8151A	DALAPON	75-99-0	µg/L	--	6	0%	0.96	1	--	--	0.487	0.487	0.010	0.495	200	--	--	--	--	--	790	--	--	--	--	--
EPA 8151A	DICAMBA	1918-00-9	µg/L	--	6	0%	0.096	0.1	--	--	0.049	0.049	0.001	0.050	--	--	--	--	--	--	--	--	--	--	--	--
EPA 8151A	DICHLOROPROP	120-36-5	µg/L	--	6	0%	0.48	0.5	--	--	0.243	0.243	0.005	0.248	--	--	--	--	--	--	--	--	--	--	--	--
EPA 8151A	DINOSEB	88-85-7	µg/L	--	6	0%	0.29	0.3	--	--	0.147	0.147	0.003	0.149	7	--	--	--	--	--	14	--	--	--	--	--
EPA 8151A	MCPA	94-74-6	µg/L	--	6	0%	96	100	--	--	48.667	48.658	1.033	49.516	--	--	--	--	--	--	--	--	--	--	--	--
EPA 8151A	MCPP	93-65-2	µg/L	--	6	0%	96	100	--	--	48.667	48.658	1.033	49.516	--	--	--	--	--	--	--	--	--	--	--	--
EPA 8151A	PENTACHLOROPHENOL	87-86-5	µg/L	--	6	0%	0.096	0.1	--	--	0.049	0.049	0.001	0.050	1	--	--	--	--	--	0.4	--	--	--	--	--
EPA 8151A	PICLORAM	1918-02-1	µg/L	--	6	0%	0.2	0.21	--	--	0.102	0.102	0.003	0.104	500	--	--	--	--	--	500	--	--	--	--	--
EPA 8270	1,2,4-TRICHLOROBENZENE	120-82-1	µg/L	--	22	0%	1	1	--	--	0.500	0.500	--	0.500	5	--	--	--	--	--	5	--	--	--	--	--
EPA 8270	1,2-DICHLOROBENZENE (O-DICHLOROBENZENE)	95-50-1	µg/L	--	22	0%	1	1	--	--	0.500	0.500	--	0.500	600	--	--	--	--	--	600	--	--	--	--	--
EPA 8270	1,3-DICHLOROBENZENE (M-DICHLOROBENZENE)	541-73-1	µg/L	--	22	0%	1	1	--	--	0.500	0.500	--	0.500	--	--	--	--	--	--	--	--	--	600	--	--
EPA 8270	1,4-DICHLOROBENZENE (PARA-DICHLOROBENZENE)	106-46-7	µg/L	--	22	0%	1	1	--	--	0.500	0.500	--	0.500	5	--	--	--	--	--	6	--	--	--	--	--
EPA 8270	2,4,5-TRICHLOROPHENOL	95-95-4	µg/L	--	22	0%	1	1	--	--	0.500	0.500	--	0.500	--	--	--	--	--	--	--	--	--	--	--	--
EPA 8270	2,4,6-TRICHLOROPHENOL	88-06-2	µg/L	--	22	0%	1	1	--	--	0.500	0.500	--	0.500	--	--	--	--	--	--	--	--	--	--	--	--
EPA 8270	2,4-DICHLOROPHENOL	120-83-2	µg/L	--	22	0%	1	1	--	--	0.500	0.500	--	0.500	--	--	--	--	--	--	--	--	--	--	--	--
EPA 8270	2,4-DIMETHYLPHENOL	105-67-9	µg/L	--	22	0%	1	1	--	--	0.500	0.500	--	0.500	--	--	--	--	--	--	--	--	--	100	--	--
EPA 8270	2,4-DINITROPHENOL	51-28-5	µg/L	--	22	0%	4	4	--	--	2.000	2.000	--	2.000	--	--	--	--	--	--	--	--	--	--	--	--
EPA 8270	2,4-DINITROTOLUENE	121-14-2	µg/L	--	22	0%	1	1	--	--	0.500	0.500	--	0.500	--	--	--	--	--	--	--	--	--	--	--	--
EPA 8270	2,6-DINITROTOLUENE	606-20-2	µg/L	--	22	0%	1	1	--	--	0.500	0.500	--	0.500	--	--	--	--	--	--	--	--	--	--	--	--
EPA 8270	2-CHLORONAPHTHALENE	91587	µg/L	--	22	0%	1	1	--	--	0.500	0.500	--	0.500	--	--	--	--	--	--	--	--	--	--	--	--
EPA 8270	2-CHLOROPHENOL	95-57-8	µg/L	--	22	0%	1	1	--	--	0.500	0.500	--	0.500	--	--	--	--	--	--	--	--	--	--	--	--
EPA 8270	2-METHYLNAPHTHALENE	91-57-6	µg/L	--	22	0%	1	1	--	--	0.500	0.500	--	0.500	--	--	--	--	--	--	--	--	--	--	--	--
EPA 8270	2-METHYLPHENOL	95-48-7	µg/L	--	22	0%	1	1	--	--	0.500	0.500	--	0.500	--	--	--	--	--	--	--	--	--	--	--	--
EPA 8270	2-NITROANILINE	88-74-4	µg/L	--	22	0%	1	1	--	--	0.500	0.500	--	0.500	--	--	--	--	--	--	--	--	--	--	--	--
EPA 8270	2-NITROPHENOL	88-75-5	µg/L	--	22	0%	1	1	--	--	0.500	0.500	--	0.500	--	--	--	--	--	--	--	--	--	--	--	--
EPA 8270	3,3'-DICHLOROBENZIDINE	91-94-1	µg/L	--	22	0%	1	1	--	--	0.500	0.500	--	0.500	--	--	--	--	--	--	--	--	--	--	--	--
EPA 8270	3-NITROANILINE	99-09-2	µg/L	--	22	0%	1	1	--	--	0.500	0.500	--	0.500	--	--	--	--	--	--	--	--	--	--	--	--
EPA 8270	3/4-METHYLPHENOL	--	µg/L	--	22	0%	1	1	--	--	0.500	0.500	--	0.500	--	--	--	--	--	--	--	--	--	--	--	--
EPA 8270	4,6-DINITRO-O-CRESOL	534-52-1	µg/L	--	22	0%	1	1	--	--	0.500	0.500	--	0.500	--	--	--	--	--	--	--	--	--	--	--	--
EPA 8270	4-BROMOPHENYLPHENYLETHER	101-55-3	µg/L	--	22	0%	1	1	--	--	0.500	0.500	--	0.500	--	--	--	--	--	--	--	--	--	--	--	--
EPA 8270	4-CHLORO-3-METHYLPHENOL	35421-08-0	µg/L	--	22	0%	1	1	--	--	0.500	0.500	--	0.500	--	--	--	--	--	--	--	--	--	--	--	--
EPA 8270	4-CHLOROANILINE	106-47-8	µg/L	--	22	0%	4	4	--	--	2.000	2.000	--	2.000	--	--	--	--	--	--	--	--	--	--	--	--
EPA 8270	4-CHLOROPHENYLPHENYLETHER	7005-72-3	µg/L	--	22	0%	1	1	--	--	0.500	0.500	--	0.500	--	--	--	--	--	--	--	--	--	--	--	--

TABLE 3A-16
Summary Water Quality Statistics for JPL Monitoring Wells
Comprehensive Groundwater Monitoring Event (Dec 2002-Feb 2003)

															CA Primary MCL			CA Secondary MCL			CA PHG			DHS Action Level		
Method	Analyte	CAS	Unit	Number of Detects	Number of Samples	Frequency of Detection	Minimum Nondetect Value	Maximum Nondetect Value	Minimum Detected Value	Maximum Detected Value	Arithmetic Mean	Geometric Mean	Standard Deviation	Upper 95% Confidence	Criteria	# of Detects Exceeded	# of ND Exceeded	Criteria	# of Detects Exceeded	# of ND Exceeded	Criteria	# of Detects Exceeded	# of ND Exceeded	Criteria	# of Detects Exceeded	# of ND Exceeded
EPA 8270	4-NITROANILINE	100-01-6	µg/L	--	22	0%	1	1	--	--	0.500	0.500	--	0.500	--	--	--	--	--	--	--	--	--	--	--	--
EPA 8270	4-NITROPHENOL	100-02-7	µg/L	--	22	0%	3	3	--	--	1.500	1.500	--	1.500	--	--	--	--	--	--	--	--	--	--	--	--
EPA 8270	ACENAPHTHENE	83-32-9	µg/L	--	22	0%	1	1	--	--	0.500	0.500	--	0.500	--	--	--	--	--	--	--	--	--	--	--	--
EPA 8270	ACENAPHTHYLENE	208-96-8	µg/L	--	22	0%	1	1	--	--	0.500	0.500	--	0.500	--	--	--	--	--	--	--	--	--	--	--	--
EPA 8270	ACETOPHENONE	98-86-2	µg/L	--	22	0%	1	1	--	--	0.500	0.500	--	0.500	--	--	--	--	--	--	--	--	--	--	--	--
EPA 8270	ANILINE	62-53-3	µg/L	--	22	0%	4	4	--	--	2.000	2.000	--	2.000	--	--	--	--	--	--	--	--	--	--	--	--
EPA 8270	ANTHRACENE	120-12-7	µg/L	--	22	0%	1	1	--	--	0.500	0.500	--	0.500	--	--	--	--	--	--	--	--	--	--	--	--
EPA 8270	BENZALDEHYDE	100-52-7	µg/L	--	22	0%	1	1	--	--	0.500	0.500	--	0.500	--	--	--	--	--	--	--	--	--	--	--	--
EPA 8270	BENZO (A) ANTHRACENE	56-55-3	µg/L	--	22	0%	1	1	--	--	0.500	0.500	--	0.500	--	--	--	--	--	--	--	--	--	--	--	--
EPA 8270	BENZO (A) PYRENE	50-32-8	µg/L	--	22	0%	1	1	--	--	0.500	0.500	--	0.500	0.2	--	22	--	--	--	0.004	--	22	--	--	--
EPA 8270	BENZO (GHI) PERYLENE	191-24-2	µg/L	--	22	0%	1	1	--	--	0.500	0.500	--	0.500	--	--	--	--	--	--	--	--	--	--	--	--
EPA 8270	BENZO(B & K)FLUORANTHENES	--	µg/L	--	22	0%	1	1	--	--	0.500	0.500	--	0.500	--	--	--	--	--	--	--	--	--	--	--	--
EPA 8270	BENZOIC ACID	65-85-0	µg/L	--	22	0%	4	4	--	--	2.000	2.000	--	2.000	--	--	--	--	--	--	--	--	--	--	--	--
EPA 8270	BENZYL ALCOHOL	100-51-6	µg/L	--	22	0%	1	1	--	--	0.500	0.500	--	0.500	--	--	--	--	--	--	--	--	--	--	--	--
EPA 8270	BIS (2-CHLOROETHYL) ETHER	111-44-4	µg/L	--	22	0%	1	1	--	--	0.500	0.500	--	0.500	--	--	--	--	--	--	--	--	--	--	--	--
EPA 8270	BIS (2-CHLOROISOPROPYL) ETHER	108-60-1	µg/L	--	22	0%	1	1	--	--	0.500	0.500	--	0.500	--	--	--	--	--	--	--	--	--	--	--	--
EPA 8270	BIS(2-CHLOROETHOXY)METHANE	111-91-1	µg/L	--	22	0%	1	1	--	--	0.500	0.500	--	0.500	--	--	--	--	--	--	--	--	--	--	--	--
EPA 8270	BIS(2-ETHYLHEXYL)PHTHALATE	117-81-7	µg/L	--	22	0%	1	1	--	--	0.500	0.500	--	0.500	4	--	--	--	--	--	12	--	--	--	--	--
EPA 8270	BUTYLBENZYLPHTHALATE	85-68-7	µg/L	--	22	0%	1	1	--	--	0.500	0.500	--	0.500	--	--	--	--	--	--	--	--	--	--	--	--
EPA 8270	CAPROLACTAM	105-60-2	µg/L	--	22	0%	1	1	--	--	0.500	0.500	--	0.500	--	--	--	--	--	--	--	--	--	--	--	--
EPA 8270	CARBAZOLE	86-74-8	µg/L	--	22	0%	1	1	--	--	0.500	0.500	--	0.500	--	--	--	--	--	--	--	--	--	--	--	--
EPA 8270	CHRYSENE	218-01-9	µg/L	--	22	0%	1	1	--	--	0.500	0.500	--	0.500	--	--	--	--	--	--	--	--	--	--	--	--
EPA 8270	DI-(2-ETHYLHEXYL)ADIPATE	103-23-1	µg/L	--	22	0%	1	1	--	--	0.500	0.500	--	0.500	400	--	--	--	--	--	--	--	--	--	--	--
EPA 8270	DI-N-BUTYLPHTHALATE	84-74-2	µg/L	--	22	0%	1	1	--	--	0.500	0.500	--	0.500	--	--	--	--	--	--	--	--	--	--	--	--
EPA 8270	DI-N-OCTYLPHTHALATE	117-84-0	µg/L	--	22	0%	1	1	--	--	0.500	0.500	--	0.500	--	--	--	--	--	--	--	--	--	--	--	--
EPA 8270	DIBENZO (A,H) ANTRACENE	53-70-3	µg/L	--	22	0%	1	1	--	--	0.500	0.500	--	0.500	--	--	--	--	--	--	--	--	--	--	--	--
EPA 8270	DIBENZOFURAN	132-64-9	µg/L	--	22	0%	1	1	--	--	0.500	0.500	--	0.500	--	--	--	--	--	--	--	--	--	--	--	--
EPA 8270	DIETHYLPHTHALATE	84-66-2	µg/L	--	22	0%	1	1	--	--	0.500	0.500	--	0.500	--	--	--	--	--	--	--	--	--	--	--	--
EPA 8270	DIMETHYL 2,3,5,6-TETRACHLOROTEREPHTHALATE (CHL(	1861-32-1	µg/L	--	22	0%	1	1	--	--	0.500	0.500	--	0.500	--	--	--	--	--	--	--	--	--	--	--	--
EPA 8270	DIMETHYLPHTHALATE	131-11-3	µg/L	--	22	0%	1	1	--	--	0.500	0.500	--	0.500	--	--	--	--	--	--	--	--	--	--	--	--
EPA 8270	FLUORANTHENE	206-44-0	µg/L	--	22	0%	1	1	--	--	0.500	0.500	--	0.500	--	--	--	--	--	--	--	--	--	--	--	--
EPA 8270	FLUORENE	86-73-7	µg/L	--	22	0%	1	1	--	--	0.500	0.500	--	0.500	--	--	--	--	--	--	--	--	--	--	--	--
EPA 8270	HEXACHLOROBENZENE	118-74-1	µg/L	--	22	0%	1	1	--	--	0.500	0.500	--	0.500	1	--	--	--	--	--	--	--	--	--	--	--
EPA 8270	HEXACHLOROBUTADIENE	87-68-3	µg/L	--	22	0%	1	1	--	--	0.500	0.500	--	0.500	--	--	--	--	--	--	--	--	--	--	--	--
EPA 8270	HEXACHLOROCYCLOPENTADIENE	77-47-4	µg/L	--	22	0%	8	8	--	--	4.000	4.000	--	4.000	50	--	--	--	--	--	50	--	--	--	--	--
EPA 8270	HEXACHLOROETHANE	67-72-1	µg/L	--	22	0%	1	1	--	--	0.500	0.500	--	0.500	--	--	--	--	--	--	--	--	--	--	--	--
EPA 8270	INDENO(1,2,3-C,D)PYRENE	193-39-5	µg/L	--	22	0%	1	1	--	--	0.500	0.500	--	0.500	--	--	--	--	--	--	--	--	--	--	--	--
EPA 8270	ISOPHORONE	78-59-1	µg/L	--	22	0%	1	1	--	--	0.500	0.500	--	0.500	--	--	--	--	--	--	--	--	--	--	--	--
EPA 8270	N-NITROSODI-N-PROPYLAMINE	621-64-7	µg/L	--	22	0%	1	1	--	--	0.500	0.500	--	0.500	--	--	--	--	--	--	--	--	--	--	--	--
EPA 8270	N-NITROSODIMETHYLAMINE (NDMA)	62-75-9	µg/L	--	22	0%	1	1	--	--	0.500	0.500	--	0.500	--	--	--	--	--	--	--	--	--	0.01	--	22
EPA 8270	N-NITROSODIPHENYLAMINE	86-30-6	µg/L	--	22	0%	1	1	--	--	0.500	0.500	--	0.500	--	--	--	--	--	--	--	--	--	--	--	--
EPA 8270	NAPHTHALENE	91-20-3	µg/L	--	22	0%	1	1	--	--	0.500	0.500	--	0.500	--	--	--	--	--	--	--	--	--	170	--	--
EPA 8270	NITROBENZENE	98-95-3	µg/L	--	22	0%	1	1	--	--	0.500	0.500	--	0.500	--	--	--	--	--	--	--	--	--	--	--	--
EPA 8270	PENTACHLOROPHENOL	87-86-5	µg/L	--	22	0%	4	4	--	--	2.000	2.000	--	2.000	1	--	22	--	--	--	0.4	--	22	--	--	--
EPA 8270	PHENANTHRENE	85-01-8	µg/L	--	22	0%	1	1	--	--	0.500	0.500	--	0.500	--	--	--	--	--	--	--	--	--	--	--	--
EPA 8270	PHENOL	108-95-2	µg/L	--	22	0%	1	1	--	--	0.500	0.500	--	0.500	--	--	--	--	--	--	--	--	--	4200	--	--
EPA 8270	PYRENE	129-00-0	µg/L	--	22	0%	1	1	--	--	0.500	0.500	--	0.500	--	--	--	--	--	--	--	--	--	--	--	--
EPA 8270	PYRIDINE	110-86-1	µg/L	--	22	0%	3	3	--	--	1.500	1.500	--	1.500	--	--	--	--	--	--	--	--	--	--	--	--
EPA 8270 SIM	1,4-DIOXANE	123-91-1	µg/L	9	22	41%	0.96	1	0.6	3	0.958	0.763	0.783	1.246	--	--	--	--	--	--	--	--	--	3	--	--
EPA 8290	1,2,3,4,6,7,8-HpCDD	35822-46-9	PG/L	--	4	0%	1.88	3.57	--	--	1.515	1.403	0.357	1.861	--	--	--	--	--	--	--	--	--	--	--	--
EPA 8290	1,2,3,4,6,7,8-HpCDF	67562-39-4	PG/L	--	4	0%	1.17	2.31	--	--	0.798	0.762	0.257	1.092	--	--	--	--	--	--	--	--	--	--	--	--
EPA 8290	1,2,3,4,7,8,9-HpCDF	55673-89-7	PG/L	--	4	0%	1.46	3.11	--	--	1.003	1.053	0.358	1.518	--	--	--	--	--	--	--	--	--	--	--	--
EPA 8290	1,2,3,4,7,8-HxCDD	39227-28-6	PG/L	--	4	0%	2.83	4.97	--	--	1.851	1.722	0.528	2.399	--	--	--	--	--	--	--	--	--	--	--	--
EPA 8290	1,2,3,4,7,8-HxCDF	70648-26-9	PG/L	--	4	0%	0.845	1.09	--	--	0.488	0.485	0.053	0.549	--	--	--	--	--	--	--	--	--	--	--	--
EPA 8290	1,2,3,6,7,8-HxCDD	57653-85-7	PG/L	--	4	0%	3.35	5.42	--	--	2.049	1.857	0.610	2.647	--	--	--	--	--	--	--	--	--	--	--	--
EPA 8290	1,2,3,6,7,8-HxCDF	57117-44-9	PG/L	--	4	0%	1.06	1.28	--	--	0.569	0.566	0.050	0.626	--	--	--	--	--	--	--	--	--	--	--	--
EPA 8290	1,2,3,7,8,9-HxCDD	19408-74-3	PG/L	--	4	0%	3.02	4.85	--	--	1.859	1.701	0.517	2.365	--	--	--	--	--	--	--	--	--	--	--	--
EPA 8290	1,2,3,7,8,9-HxCDF	72918-21-9	PG/L	--	4	0%	1.07	1.37	--	--	0.599	0.596	0.063	0.673	--	--	--	--	--	--	--	--	--	--	--	--
EPA 8290	1,2,3,7,8-PeCDD	40321-76-4	PG/L	--	4	0%	2.405	2.74	--	--	1.281	1.191	0.213	1.456	--	--	--	--	--	--	--	--	--	--	--	--
EPA 8290	1,2,3,7,8-PeCDF	57117-41-6	PG/L	--	4	0%	2.01	3.02	--	--	1.304	1.289	0.219	1.561	--	--	--	--	--	--	--	--	--	--	--	--
EPA 8290	2,3,4,6,7,8-HxCDF	60851-34-5	PG/L	--	4	0%	1.27	1.73	--	--	0.730	0.715	0.108	0.849	--	--	--	--	--	--	--	--	--	--	--	--
EPA 8290	2,3,4,7,8-PeCDF	57117-31-4	PG/L	--	4	0%	1.88	2.41	--	--	1.101	1.065	0.164	1.268	--	--	--	--	--	--	--	--	--	--	--	--
EPA 8290	2,3,7,8-TCDD (DIOXIN)	1746-01-6	PG/L	--	4	0%	1.22	1.68	--	--	0.717	0.688	0.131	0.852	30	--	--	--	--	--	--	--	--	--	--	--
EPA 8290	2,3,7,8-TCDF	51207-31-9	PG/L	--	4	0%	1.095	1.7	--	--	0.637	0.624	0.145	0.805	--	--	--	--	--	--	--	--	--	--	--	--
EPA 8290	OCDD	3268-87-9	PG/L	--	4	0%	3.7	5.65	--	--	2.282	2.230	0.434	2.771	--	--	--	--	--	--	--	--	--	--	--	--
EPA 8290	OCDF	39001-02-0	PG/L	--	4	0%	3.005	4.23	--	--	1.807	1.740	0.334	2.158	--	--	--	--	--	--	--	--	--	--	--	--
EPA 8290	Total HpCDD	37871-00-4	PG/L	--	4	0%	2.465	3.57	--	--	1.514	1.401	0.359	1.863	--	--	--	--	--	--	--	--	--	--	--	--
EPA 8290	Total HpCDF	38998-75-3	PG/L	--	4	0%	1.46	3.11	--	--	1.103	1.053	0.358	1.518	--	--	--	--	--	--	--	--	--	--	--	--
EPA 8290	Total HxCDD	34465-46-8	PG/L	--	4	0%	3.35	5.42	--	--	2.057	1.879	0.589	2.637	--	--	--	--	--	--	--	--	--	--	--	--
EPA 8290	Total HxCDF	55684-94-1	PG/L	--	4	0%	1.27	1.73	--	--	0.730	0.715	0.108	0.849	--	--	--	--	--	--	--	--	--	--	--	--

TABLE 3A-16
Summary Water Quality Statistics for JPL Monitoring Wells
Comprehensive Groundwater Monitoring Event (Dec 2002-Feb 2003)

															CA Primary MCL			CA Secondary MCL			CA PHG			DHS Action Level		
Method	Analyte	CAS	Unit	Number of Detects	Number of Samples	Frequency of Detection	Minimum Nondetect Value	Maximum Nondetect Value	Minimum Detected Value	Maximum Detected Value	Arithmetic Mean	Geometric Mean	Standard Deviation	Upper 95% Confidence	Criteria	# of Detects Exceeded	# of ND Exceeded	Criteria	# of Detects Exceeded	# of ND Exceeded	Criteria	# of Detects Exceeded	# of ND Exceeded	Criteria	# of Detects Exceeded	# of ND Exceeded
EPA 8290	Total PeCDD	36088-22-9	PG/L	--	4	0%	2.405	2.74	--	--	1.281	1.191	0.213	1.456	--	--	--	--	--	--	--	--	--	--	--	--
EPA 8290	Total PeCDF	30402-15-4	PG/L	--	4	0%	20.5	3.02	--	--	1.309	1.289	0.219	1.561	--	--	--	--	--	--	--	--	--	--	--	--
EPA 8290	Total TCDD	41903-57-5	PG/L	--	4	0%	1.22	1.68	--	--	0.717	0.688	0.131	0.852	--	--	--	--	--	--	--	--	--	--	--	--
EPA 8290	Total TCDF	55722-27-5	PG/L	--	4	0%	1.095	1.7	--	--	0.637	0.624	0.145	0.805	--	--	--	--	--	--	--	--	--	--	--	--
EPA 8315A	2-BUTANONE (METHYL ETHYL KETONE, MEK)	78-93-3	UG/ML	--	6	0%	0.03	0.03	--	--	0.015	0.015	--	0.015	--	--	--	--	--	--	--	--	--	--	--	--
EPA 8315A	ACETALDEHYDE	75-07-0	UG/ML	--	6	0%	0.003	0.003	--	--	0.002	0.002	--	0.002	--	--	--	--	--	--	--	--	--	--	--	--
EPA 8315A	ACETONE	67-64-1	UG/ML	--	6	0%	0.01	0.01	--	--	0.005	0.005	--	0.005	--	--	--	--	--	--	--	--	--	--	--	--
EPA 8315A	ACROLEIN	107-02-8	UG/ML	--	6	0%	0.01	0.01	--	--	0.005	0.005	--	0.005	--	--	--	--	--	--	--	--	--	--	--	--
EPA 8315A	BENZALDEHYDE	100-52-7	UG/ML	--	6	0%	0.03	0.03	--	--	0.015	0.015	--	0.015	--	--	--	--	--	--	--	--	--	--	--	--
EPA 8315A	BUTYRALDEHYDE	123-72-8	UG/ML	--	6	0%	0.03	0.03	--	--	0.015	0.015	--	0.015	--	--	--	--	--	--	--	--	--	--	--	--
EPA 8315A	CROTONALDEHYDE	4170-30-3	UG/ML	--	6	0%	0.03	0.03	--	--	0.015	0.015	--	0.015	--	--	--	--	--	--	--	--	--	--	--	--
EPA 8315A	FORMALDEHYDE	50-00-0	UG/ML	--	6	0%	0.004	0.004	--	--	0.002	0.002	--	0.002	--	--	--	--	--	--	--	--	--	--	--	--
EPA 8315A	HEXANALDEHYDE	66-25-1	UG/ML	--	6	0%	0.03	0.03	--	--	0.015	0.015	--	0.015	--	--	--	--	--	--	--	--	--	--	--	--
EPA 8315A	M-TOLUALDEHYDE	620-23-5	UG/ML	--	6	0%	0.03	0.03	--	--	0.015	0.015	--	0.015	--	--	--	--	--	--	--	--	--	--	--	--
EPA 8315A	METHACROLEIN	78-85-3	UG/ML	--	6	0%	0.03	0.03	--	--	0.015	0.015	--	0.015	--	--	--	--	--	--	--	--	--	--	--	--
EPA 8315A	PROPIONALDEHYDE	123-38-6	UG/ML	--	6	0%	0.03	0.03	--	--	0.015	0.015	--	0.015	--	--	--	--	--	--	--	--	--	--	--	--
EPA 8315A	VALERALDEHYDE	110-62-3	UG/ML	--	6	0%	0.03	0.03	--	--	0.015	0.015	--	0.015	--	--	--	--	--	--	--	--	--	--	--	--
EPA 8330	1,3,5-TRINITROBENZENE (TNB)	99-35-4	µg/L	--	22	0%	0.2	4	--	--	0.186	0.115	0.405	0.335	--	--	--	--	--	--	--	--	--	--	--	--
EPA 8330	1,3-DINITROBENZENE (DNB)	99-65-0	µg/L	--	22	0%	0.2	4	--	--	0.186	0.115	0.405	0.335	--	--	--	--	--	--	--	--	--	--	--	--
EPA 8330	2,4,6-TRINITROTOLUENE (TNT)	118-96-7	µg/L	5	22	23%	0.110	2	2.2	25.7	2.002	0.180	5.550	4.038	--	--	--	--	--	--	--	--	--	--	--	--
EPA 8330	2,4-DINITROTOLUENE	121-14-2	µg/L	--	22	0%	0.2	4	--	--	0.186	0.115	0.405	0.335	--	--	--	--	--	--	--	--	--	--	--	--
EPA 8330	2,6-DINITROTOLUENE	606-20-2	µg/L	--	22	0%	0.33	4	--	--	0.248	0.185	0.391	0.392	--	--	--	--	--	--	--	--	--	--	--	--
EPA 8330	2-AMINO-4,6-DINITROTOLUENE	35572-78-2	µg/L	--	22	0%	0.210	2	--	--	0.146	0.116	0.191	0.216	--	--	--	--	--	--	--	--	--	--	--	--
EPA 8330	2-NITROTOLUENE	88-72-2	µg/L	--	22	0%	0.66	11	--	--	0.565	0.375	1.102	0.969	--	--	--	--	--	--	--	--	--	--	--	--
EPA 8330	3-NITROTOLUENE	99-08-1	µg/L	--	22	0%	0.3	6	--	--	0.280	0.172	0.608	0.502	--	--	--	--	--	--	--	--	--	--	--	--
EPA 8330	4-AMINO-2,6-DINITROTOLUENE	19406-51-0	µg/L	--	22	0%	0.2	4	--	--	0.186	0.115	0.405	0.335	--	--	--	--	--	--	--	--	--	--	--	--
EPA 8330	4-NITROTOLUENE	99-99-0	µg/L	--	22	0%	0.66	11	--	--	0.565	0.375	1.102	0.969	--	--	--	--	--	--	--	--	--	--	--	--
EPA 8330	HMX	2691-41-0	µg/L	2	22	9%	0.5	10	0.7	2.5	0.589	0.333	1.098	0.991	--	--	--	--	--	--	--	--	--	--	--	--
EPA 8330	NITROBENZENE	98-95-3	µg/L	--	22	0%	0.2	4	--	--	0.186	0.115	0.405	0.335	--	--	--	--	--	--	--	--	--	--	--	--
EPA 8330	RDX	121-82-4	µg/L	6	22	27%	0.2	4	0.66	27.3	2.050	0.301	5.827	4.187	--	--	--	--	--	--	--	--	--	--	--	--
EPA 8330	TETRYL	479-45-8	µg/L	--	22	0%	0.15	4.4	--	--	0.172	0.087	0.453	0.338	--	--	--	--	--	--	--	--	--	--	--	--
EPA 9040B	PH	10-29-7	UNIT	22	22	100%	--	--	6.77	9.39	7.645	7.625	0.587	7.861	--	--	--	6.5-8.5	1	--	--	--	--	--	--	--
EPA/ML 245.1	MERCURY	7439-97-6	µg/L	9	22	41%	0.066	0.2	0.058	0.087	0.083	0.079	0.023	0.093	2	--	--	--	--	--	1.2	--	--	--	--	--
ML/EPA 900.0	ALPHA, GROSS	12587-46-1	PCI/L	13	14	93%	0.447	0.447	1.4	13.5	5.183	3.338	3.974	6.856	15	--	--	--	--	--	--	--	--	--	--	--
ML/EPA 900.0	BETA, GROSS	12587-47-2	PCI/L	13	14	93%	1.12	1.12	2.09	9.16	4.633	3.837	2.634	5.880	50	--	--	--	--	--	--	--	--	--	--	--
MOE MSABN-E3291A	N-NITROSODI-N-PROPYLAMINE	621-64-7	µg/L	1	22	5%	0.005	0.005	0.125	0.125	0.008	0.003	0.026	0.019	--	--	--	--	--	--	--	--	--	--	--	--
MOE MSABN-E3291A	N-NITROSODIMETHYLAMINE (NDMA)	62-75-9	µg/L	4	22	18%	0.002	0.00314	0.00044	0.00575	0.001	0.001	0.001	0.002	--	--	--	--	--	--	--	--	--	0.01	--	--
MOE MSABN-E3291A	N-NITROSODIPHENYLAMINE	86-30-6	µg/L	14	22	64%	0.005	0.005	0.00148	0.0249	0.003	0.003	0.005	0.006	--	--	--	--	--	--	--	--	--	--	--	--

Notes:

µg/L = micrograms per liter
µg/mL = micrograms per milliliter
mg/L = milligrams per liter
NTU = Nephelometric Turbidity Units
mg O2/L = milligrams of oxygen per liter
pCi/L = picocuries per liter
pg/L = picograms per liter

1/2 of the detection limit was used for nondetected values when calculating the arithmetic mean, geometric mean, standard deviation, and 95% upper confidence limit.

TABLE 3A-17

Evaluation of Detected Analytes included in the Comprehensive Groundwater Monitoring Event

Analytes	Result	Analytes	Result
1,2,3,4,6,7,8,9-octachlorodibenzo-p-dioxin (OCDD)	not detected	fluorene	not detected
1,2-dichlorobenzene (1,2-DCB)	not detected	fluoride	detected (below reg. limits)
arochlor-1242 (PCB-1254)	not detected	flurotrichloromethane (trichloroflurometh ane)	detected (below reg. limits)
arochlor-1254	not detected	formaldehyde	not detected
arochlor-1260	not detected	fuming nitric acid (nitrate)	detected (below reg. limits)
arsenic trioxide	arsenic detected (below reg. Limits)	hydrocarbons with C_{10} through C_{22} (diesel)	detected (below reg. limits)
beryllium	detected (below reg. limits)	hydrocarbons with C_4 through C_{12} (gasoline)	not detected
butylbenzylphthalate	not detected	hydrocarbons with C_{18} or greater (motor oil)	detected (below reg. limits)
chlorobenzene	not detected	methyl ethyl ketone	not detected
chlorodifluromethane (Freon 112)	not detected	nitrates	detected (below reg. limits)
chromic acid (hexavalent chromium)	detected (above PHG)	polychlorinated biphenyls (PCBs)	not detected
cis-1,2-dichloroethylene	detected (below reg. limits)	t-amyl methyl ether (TAME)	not detected
cobalt	detected (below reg. limits)	t-butyl alcohol (TBA)	not detected
cresols (3/4-methylphenol)	not detected	total petroleum hydrocarbons (TPH)	detected (below reg. limits)
di-isopropyl ether (DIPE)	not detected	trichloroethane (1,1,2-trichloroethane)	not detected
ethyl-t-butyl ether (ETBE)	not detected		

Appendix C
NITRATE TECHNICAL MEMORANDUM

Technical Memorandum

Nitrate Occurrence in the Monk Hill Subarea
National Aeronautics and Space Administration, Jet Propulsion Laboratory, Pasadena, California

Revised Final November 7, 2005

This technical memorandum provides an evaluation of nitrate concentrations in production wells and monitoring wells located in the Monk Hill Subarea. This memorandum was prepared to support the experiment conducted by the City of Pasadena at the Windsor Well between July 12 and July 14, 2005. The objective of the experiment was to evaluate the nitrate levels in the Windsor Well during a 26 hours pump test.

The Windsor Well was taken out of service in January 2002, but continued to be sampled for water quality testing and monitoring. Because nitrate concentrations obtained from the Windsor Well during this water quality testing and monitoring period were higher than concentrations obtained while the Windsor Well was operating, one of the goals for the Windsor Well experiment was to verify the nitrate levels before, during, and after a longer runtime than was typical during water quality testing and monitoring periods.

Results of the Windsor Well experiment showed that nitrate levels decreased with increasing runtime. For instance, nitrate concentrations decreased from 49 µg/L to 40 µg/L after a runtime of 28 hours and following a 24-hour shutdown period the levels decreased at a faster rate from 46 µg/L to 40 µg/L after only two hours of runtime.

The evaluation of nitrate concentrations in production wells and monitoring wells located in the Monk Hill Subarea is provided here to further explain the increasing nitrate concentrations in the production wells that are no longer in service.

The nitrate evaluation presented in this technical memorandum was conducted as part of the Comprehensive Environmental Response, Compensation, and Liability Act (CERCLA) program at the National Aeronautics and Space Administration (NASA) Jet Propulsion Laboratory (JPL).

City of Pasadena Monk Hill Wells

Figure 1 shows the nitrate concentrations over time in samples collected from the Arroyo Well, Well 52, Ventura Well, and Windsor Well. Nitrate data for the Arroyo Well were limited, consisting of only seven sampling events. Nitrate concentrations in the Arroyo Well were relatively low, remaining at or below 25 mg/L through February 1997, at which time operation ceased.

During operation of Well 52, concentrations of nitrate tended to fluctuate monthly but remained below the maximum contaminant level (MCL) of 45 mg/L. Operation of Well 52 was stopped in early 2002. As shown on Figure 1, an increasing concentration trend began April 2002 and continued through October 2002. Nitrate concentrations first exceeded the MCL in July 2002 and continued to exceed through October 2002. It appears that nitrate concentrations increased after operation of the well stopped.

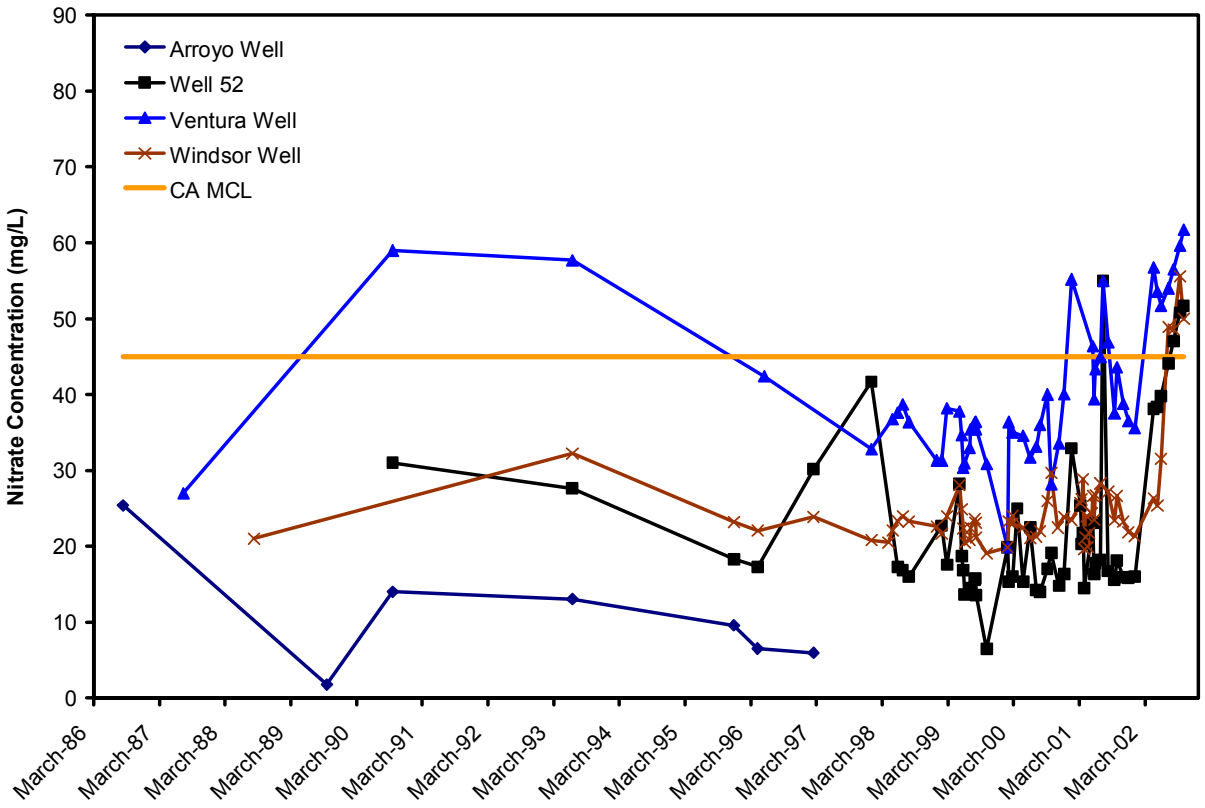

Figure 1. Nitrate Concentrations in the City of Pasadena Monk Hill Wells

For the Ventura Well, concentrations of nitrate were above the MCL in the early 1990s, but decreased to concentrations below the MCL in May 1996 and continued to stay below the MCL up until January 2001. A slight increasing trend is noticeable in 2001 compared to previous years. Throughout 2001, nitrate concentrations tended to fluctuate and at times exceeded the MCL. Ventura Well was shutdown in January 2002. Beginning in April 2002, an increasing trend is evident in which nitrate concentrations are consistently detected above the MCL. Again, it appears that nitrate concentrations increased after operation of the well stopped.

For the Windsor Well, nitrate concentrations were below the MCL, ranging between 20 and 30 mg/L up until June 2002. The Windsor Well was shutdown in January 2002. As indicated on Figure 1 and similar to Well 52 and Ventura Well, an increasing trend in nitrate levels was observed after the well was shut down.

Although Ventura, Windsor, and Well 52 were taken out of service in the middle of January 2002, city staff continued to run the wells once a month for 15 to 30 minutes to collect samples strictly for water quality testing and monitoring. Thus, samples collected after January 2002 were the result of the continued water quality testing and monitoring of these wells.

Additional observations for Figure 1:

- The Ventura Well has had the highest nitrate concentrations, followed by Windsor Well;
- Arroyo Well and Well 52 have had the lowest nitrate concentrations;

- An increasing trend for Ventura, Windsor, and Well 52 is observed for the 2002 data (concentrations in 2002 are much higher than what was being monitored while these wells were operating);
- It appears that samples collected from non-operating wells may be associated with elevated nitrate concentrations.

Other Monk Hill Wells

Figure 2 presents the nitrate concentrations over time in the several other Monk Hill wells located downgradient of JPL. Las Flores Water Company (LFWC) Well No. 2 is the only well with nitrate concentrations exceeding the MCL. Nitrate concentrations in the LFWC#2 have ranged between 34 mg/L and 60 mg/L.

For Rubio Cañon Land and Water Association (RCL&WA) Well No. 4, nitrate concentrations in the early 1990s exceeded the MCL, but since then concentrations have remained below the MCL except for one sampling event in July 1995. Since 1997, nitrate concentrations have ranged between 15 mg/L and 40 mg/L. From July 1995 to January 2003, a slight deceasing trend in nitrate concentrations is evident.

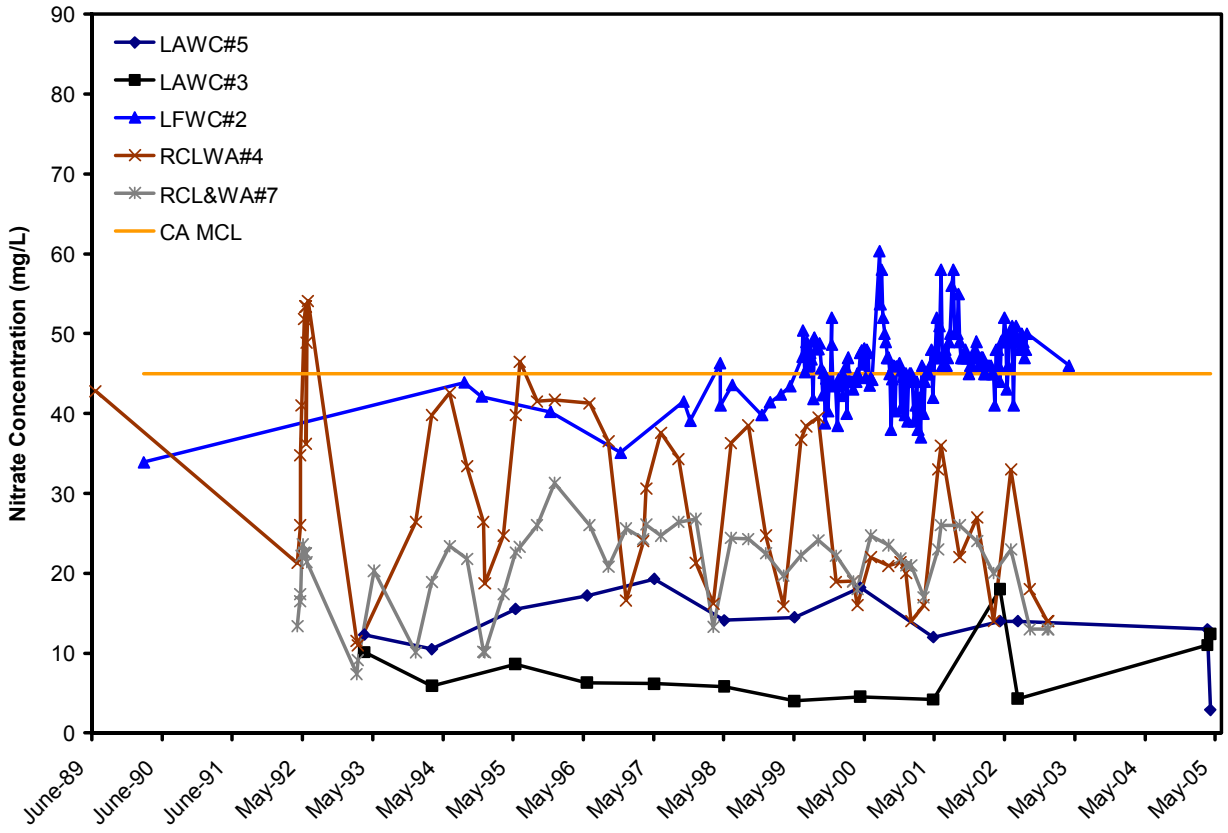

Figure 2. Nitrate Concentrations in the Other Monk Hill Wells

For RCL&WA#7, nitrate concentrations have never exceeded the MCL. Concentrations have ranged from 7 mg/L to 31 mg/L.

For Lincoln Avenue Water Company (LAWC) Wells 3 and 5, nitrate concentrations have never exceeded the MCL. Maximum nitrate concentrations have been less than 20 mg/L.

Additional observations for Figure 2:

- There is no evidence of an increasing trend in the other Monk Hill Subarea wells beginning in 2002.
- LFWC#2 contains higher nitrate concentrations than the LAWC and RCLWA wells;

Valley Water Company

Nitrate concentrations in the Valley Water Company (VWC) wells (Figure 3) are generally higher than those observed in the other Monk Hill Subarea production wells. The MCL for nitrate has been exceeded in all four VWC wells. The consistent pattern present in the nitrate levels (lower nitrate concentrations present during the May/June months, and the higher nitrate concentrations present during the July/August/September months) is likely caused by the effects of injection of imported water at these wells. Lower nitrate levels are observed during periods of imported water injection and higher nitrate detections are observed when injection is not occurring. Nitrate concentrations in samples collected from the VWC wells have been as high as 84 mg/L. Elevated nitrate levels are believed to be associated with unsewered areas in La Cañada.

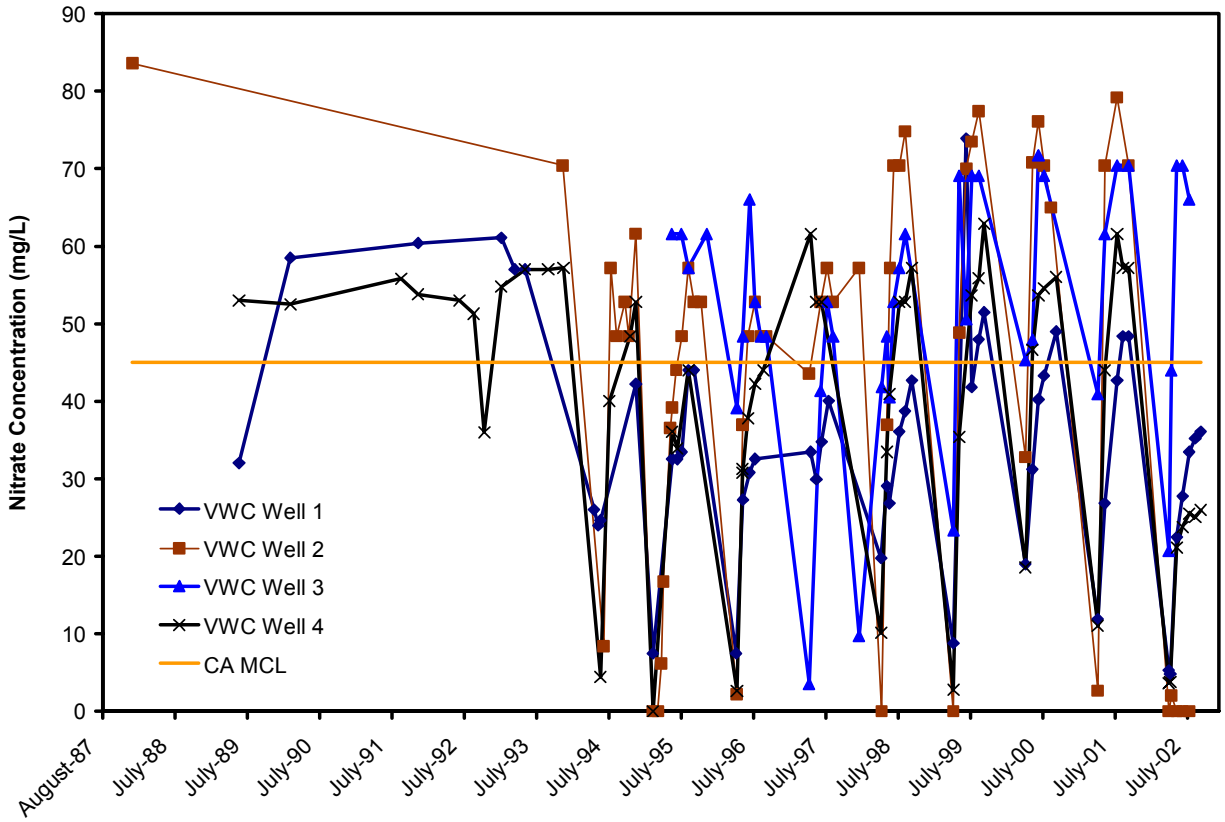

Figure 3. Nitrate Concentrations in the Valley Water Company Wells

JPL Monitoring Wells

Nitrate concentrations in samples collected from six multi-port JPL monitoring wells (MW-14, MW-17, MW-18, MW-19, MW-20, and MW-21) are shown on Figures 4 through 9. Results from all sampling ports are provided on these figures. For this technical memorandum, nitrate concentration data from the JPL wells was converted from nitrate as nitrogen (NO_3–N) to nitrate as nitrate (NO_3-NO_3). This conversion was done so that these data could be compared to the production well data which is reported as NO_3-NO_3. For each monitoring well, the shallower screened interval contains the higher nitrate concentration, which is consistent with a release occurring near the ground surface (e.g., unsewered areas, fertilizer application). Observations associated with each of the monitoring wells are provided below.

MW-14:

- This well is located nearest to the VWC Wells.
- Nitrate concentrations have consistently been detected between 40 mg/L and 90 mg/L since late 1998.
- Out of the six JPL wells presented here, MW-14 (screens 1 – 4) maintains the highest nitrate concentrations consistently over time.
- There is no evidence of an increasing trend in nitrate concentrations in MW-14 beginning in 2002.

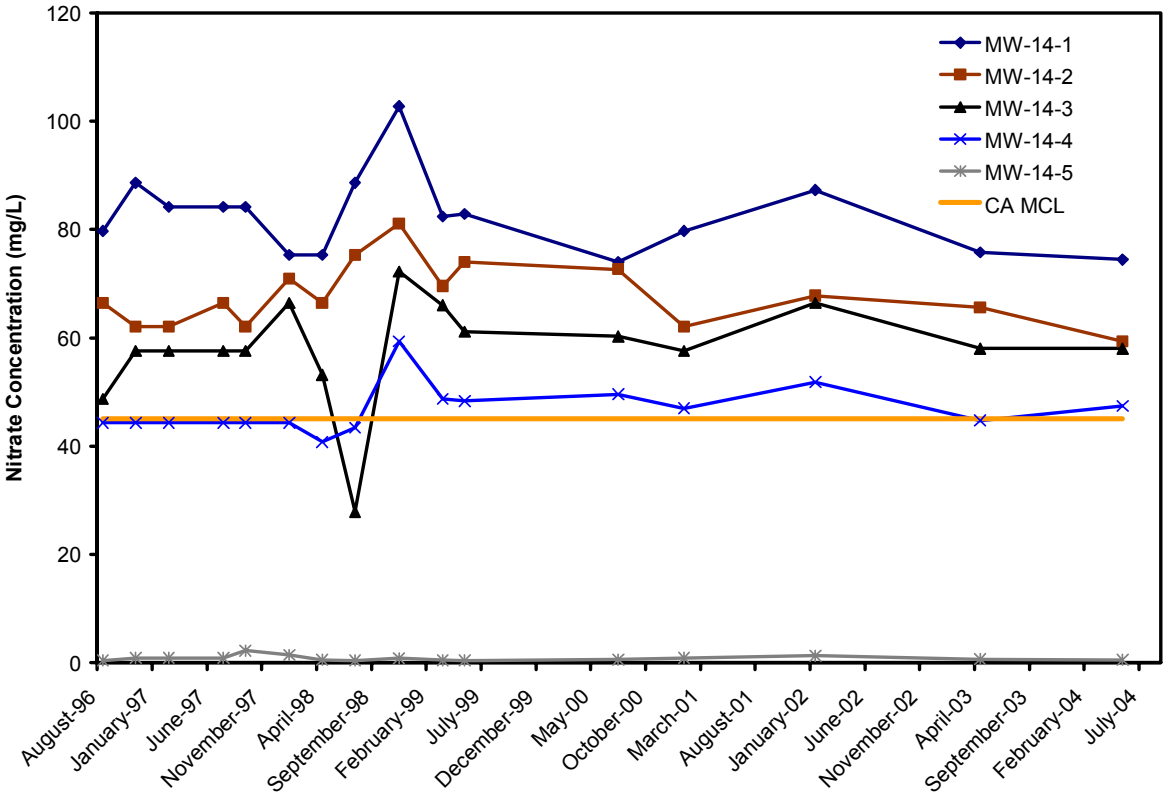

Figure 4. Nitrate Concentrations in MW-14

MW-17:

- This well is located approximately 500 feet west of the LAWC well #3.
- Nitrate concentrations have been less than 10 mg/L in all screened intervals except for screen 2 in May 2004;
- Nitrate concentrations in screen 2 have noticeably increased since May 2003;
- Nitrate concentrations in screens 4 and 5 have been decreasing.

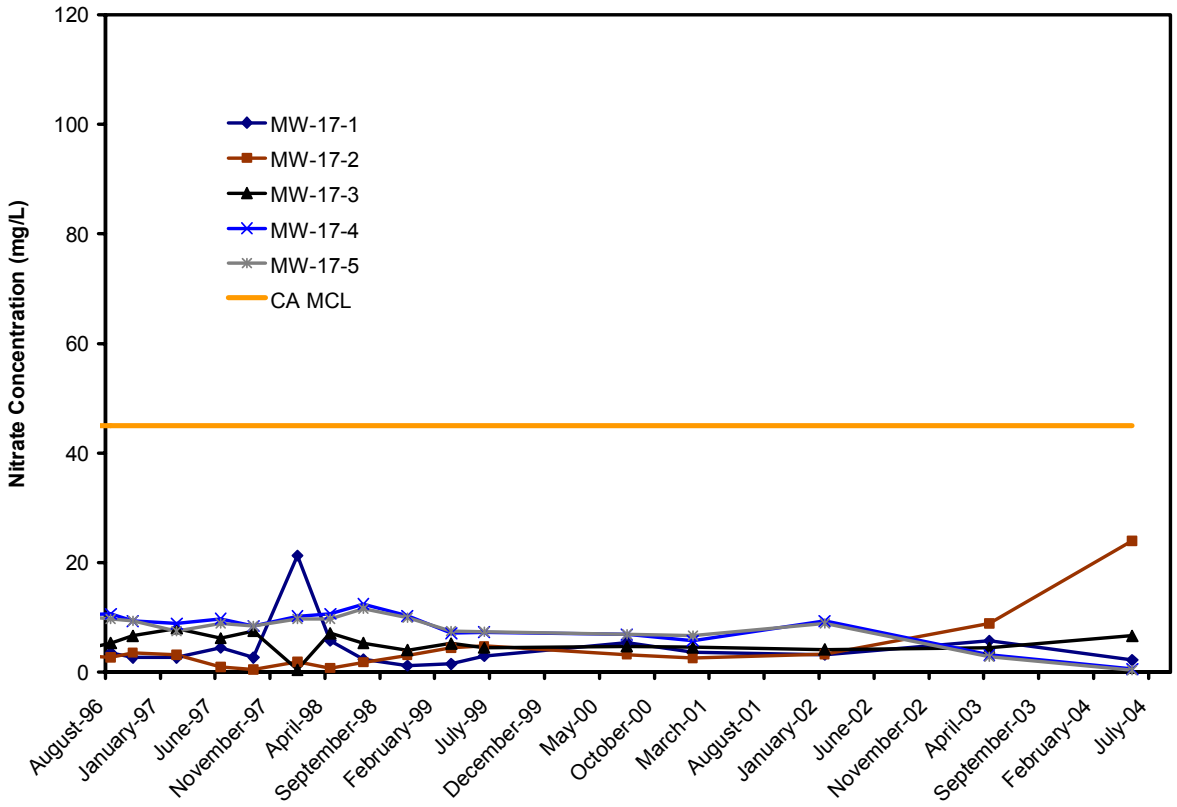

Figure 5. Nitrate Concentrations in MW-17

MW-18:

- This well is located a considerable distance north of the Monk Hill wells and is closest to the Arroyo Well.
- Nitrate concentrations have been less than 10 mg/L since mid 1998;
- Nitrate concentrations in screen 1 and 3 indicate an increasing trend since 1999 (although concentrations remain below 10 mg/L).
- There is no evidence of an increasing trend in nitrate concentrations in MW-18 beginning in 2002.

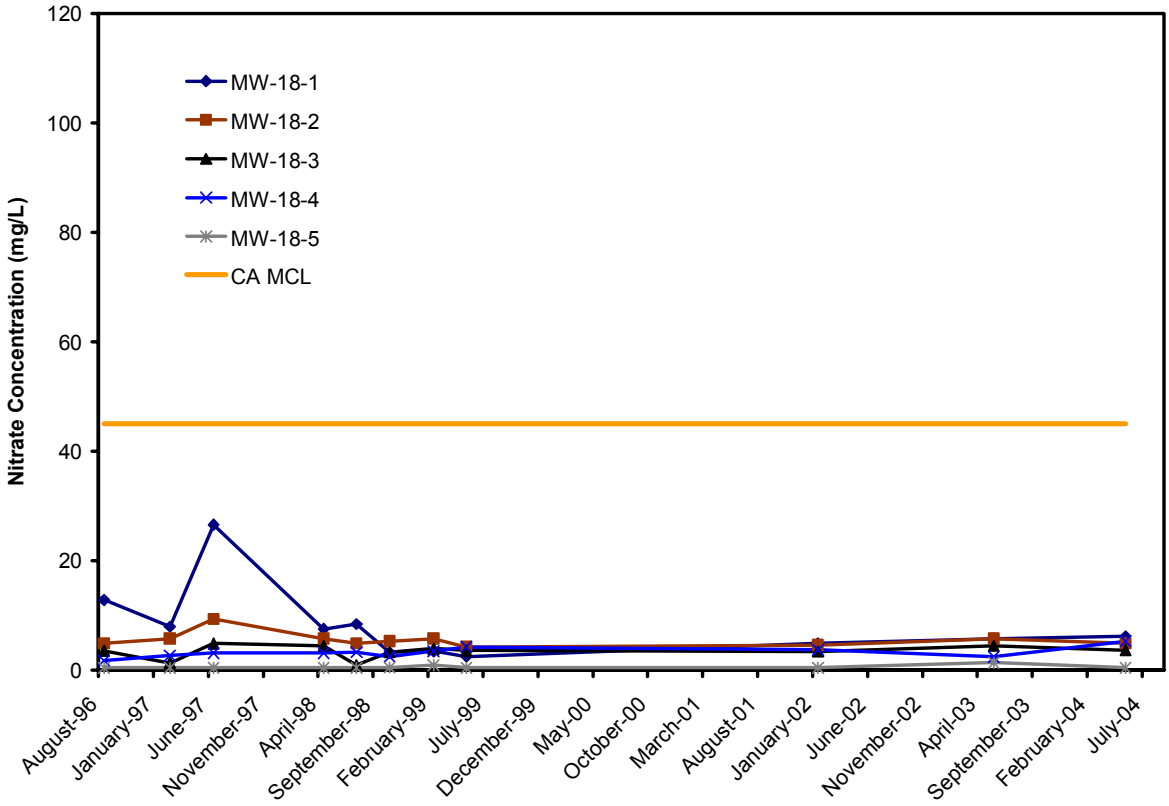

Figure 6. Nitrate Concentrations in MW-18

MW-19:

- This well is located within the City of Pasadena Windsor Reservoir property approximately 500 feet south of the Windsor Well.
- Nitrate concentrations were consistently detected below 10 mg/L for Screen 1, until April 2004.
- Nitrate in screen 2 was consistently detected between 10 mg/L and 40 mg/L until April 2003 when it was detected at 55.4 mg/L;
- It appears that after January 2002, nitrate concentrations in Screen 2 noticeably increased, while concentrations in Screen 5 decreased;
- Nitrate in Screen 4 began increasing after January 2002;
- Nitrate concentrations in Screen 3 are consistently between 40 and 50 mg/l.

MW-20:

- MW-20 is located approximately midway between LAWC#5 and RCL&WA#4.
- Nitrate concentrations in Screen 1 tended to fluctuate, ranging between 37 mg/L and 84 mg/L, but noticeably decreased to 10 mg/L in early 2003;
- Nitrate concentrations in Screens 2 through 5 have been fairly consistent over time and always less than 20 mg/L.
- There is a noticable decreasing trend in nitrate concentrations in MW-20 (Screen 1) beginning in 2002.

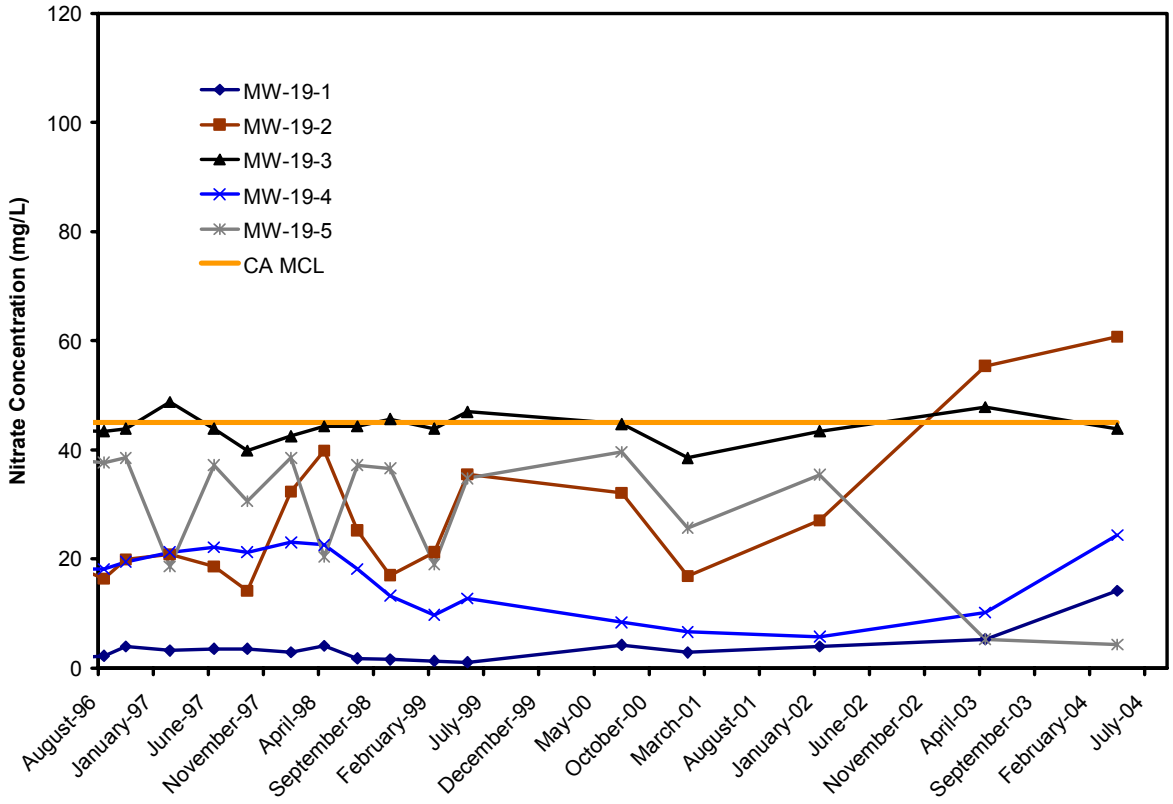

Figure 7. Nitrate Concentrations in MW-19

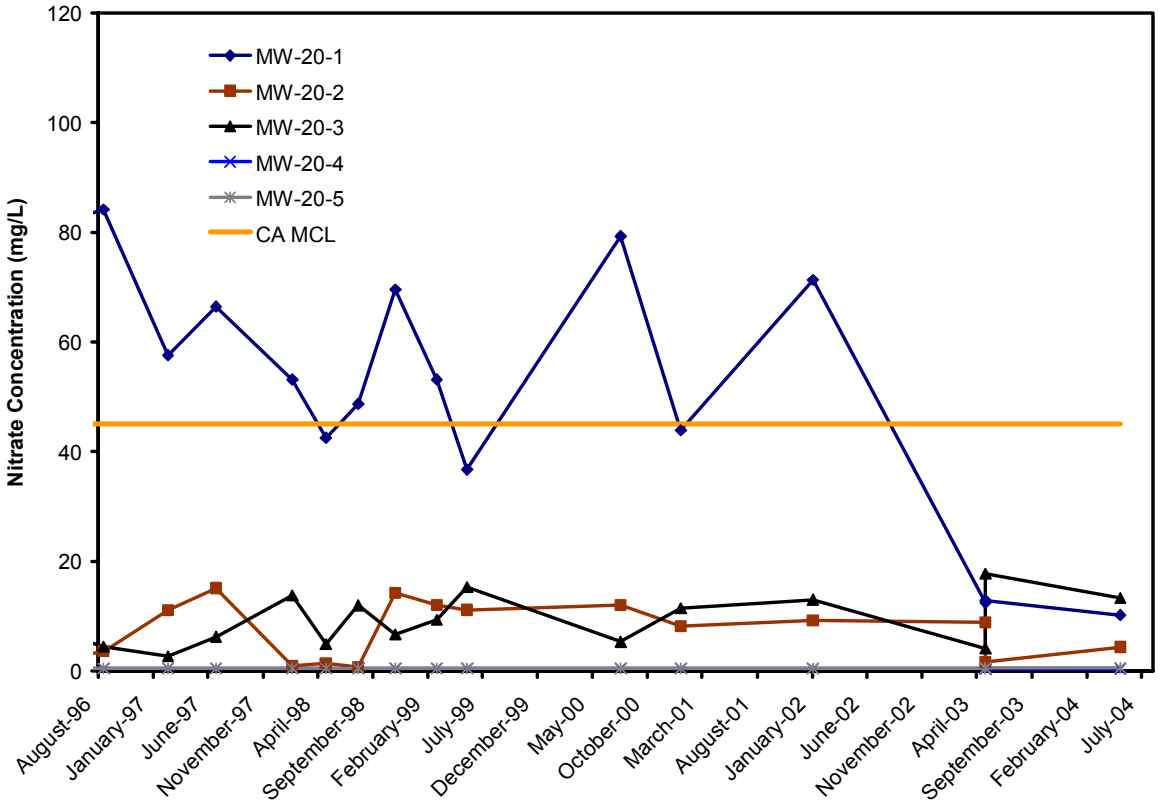

Figure 8. Nitrate Concentrations in MW-20

MW-21:

- Well MW-21 is located south of the JPL facility approximately midway between the VWC wells and the Windsor Well.
- Nitrate concentrations in Screen 1 have been erratic, ranging from non-detect to 76 mg/L, with the majority of concentrations between 50 mg/L and 77 mg/L.
- Nitrate concentrations in Screens 2 through 5 have been fairly consistent over time, ranging between 17.2 mg/L and 52 mg/L.
- There is no evidence of an increasing trend in nitrate concentrations in MW-21 beginning in 2002.

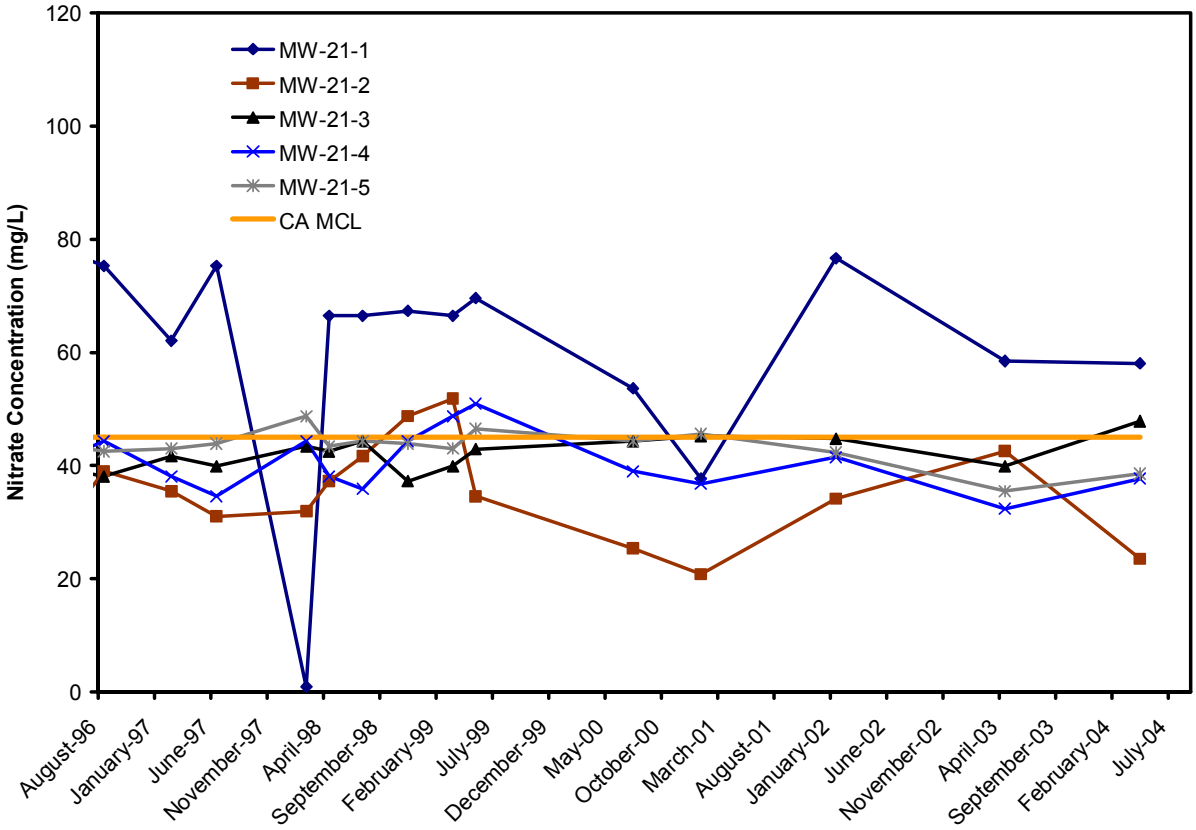

Figure 9. Nitrate Concentrations in MW-21

Overall Summary of Nitrate Occurrence in the Monk Hill Subarea

- Nitrate concentrations in the City of Pasadena wells were historically similar to nitrate concentrations in the other Monk Hill Wells while these wells were operating;
- Nitrate concentrations in the City of Pasadena wells increased after the wells were shut down (2002 time frame);
- Nitrate concentrations in the other Monk Hill wells remained fairly consistent after the City of Pasadena Wells were shut down (after 2002);
- Nitrate concentrations in the Valley Water Company wells have been consistent over time, slightly increasing in 1999, but retaining a pattern similar to previous years;
- Higher nitrate concentrations are observed in the shallower screened intervals of the JPL wells;

- Increasing nitrate concentrations have been observed in MW-19 Screens 1, 2, and 4 and MW-17 Screen 2;
- Decreasing nitrate concentrations have been observed in MW-19 Screen 5, MW-17 Screens 1 and 5, and MW-20 Screen 1.

Discussion

Nitrate concentrations in other Monk Hill wells located upgradient (i.e., VWC wells) and downgradient of the Pasadena Monk Hill wells have remained relatively consistent before and since the Pasadena Monk Hill wells were taken offline in January 2002. Considering these data, an increasing nitrate trend in the basin does not seem possible to explain nitrate increases in Pasadena's Monk Hill wells after 2002.

However, one possible explanation is the association of nitrate concentrations and groundwater flow pathways. According to the information provided in the OU-1/OU-3 Remedial Investigation (RI) report (Foster Wheeler, 1999) the direction of groundwater flow is dynamic. In order to evaluate these dynamics, an evaluation using a variety of data (e.g., water levels, hydraulic head measurements, monthly precipitation data, extraction data, and basin recharge amounts) collected from within the Monk Hill Subarea was conducted during the RI to ascertain groundwater flow conditions and effects outside influences have on the aquifer. For more detailed information regarding the groundwater flow pathway evaluation, please refer to Section 3.4.3 of the RI (http://jplwater.nasa.gov/NMOWeb/AdminRecord/docs/NAS71001.htm).

The stratigraphy of the area was evaluated and four hydrogeologic layers of the aquifer were identified based on depth, lithology, and the way screened intervals in the JPL multi-port wells responded to pumping of nearby municipal production wells. The four aquifer layers in the study area include the upper and lower sections of the Older Fanglomerate Series (aquifer Layers 1 and 2, respectively), the Pacoima Formation (aquifer Layer 3) and the Saugus Formation (aquifer Layer 4). It was determined that Layers 2 and 3 are most appropriate for evaluation of the Pasadena Monk Hill wells. A summary of the RI findings for Layers 2 and 3 are provided below.

To illustrate various flow paths in Aquifer Layer 2, contour maps of hydraulic-head elevations were prepared for a period when no municipal production wells were pumping (Figure 10), a period when only the Lincoln Avenue Water Company was pumping (Figure 11), a period when only the Pasadena wells were pumping (Figure 12), and a period when all nearby municipal production wells were pumping (Figure 13).

As illustrated on Figure 10, groundwater flow in Aquifer Layer 2 is to the southeast, towards MW-20 when the nearby municipal production wells are not pumping. When the LAWC #3 is turned on (Figure 11), little impact to Layer 2 is observed; thus the groundwater flow is still to the southeast towards MW-20. When the Pasadena Monk Hill wells are pumping (Figure 12), significant impacts, as far downgradient as MW-20, are observed on the potentiometric surface in aquifer Layer 2. When all nearby production wells are pumping (Figure 13), the impacts to Layer 2 near the Pasadena Monk Hill Wells are not significantly impacted. The effects of municipal well pumping on groundwater flow in Layer 3 are similar to Layer 2 and are presented in Figures 14 through 17.

As illustrated on Figure 14, groundwater flow in Aquifer Layer 3 is to the southeast, towards well MW-20 when the nearby municipal production wells are not pumping. When the LAWC #3 is turned on (Figure 15), little impact to Layer 3 is observed; thus the groundwater flow is still to the southeast towards MW-20. Similar to Aquifer Layer 2, pumping of the Pasadena Monk Hill wells has a very significant impact on the potentiometric surface in aquifer Layer 3. As shown on Figure 16, when only the Pasadena wells are pumping, the cone of depression in the potentiometric surface extends a great distance. The cone of depression developed in Layer 3 during pumping of the Pasadena wells is much deeper, and broader than is developed in the other layers. When pumping, the La Cañada Irrigation District, VWC, LFWC, and RCL&WA wells do not impact the potentiometric surface in Layer 3 beneath JPL (Figure 17).

Based on the historical nitrate concentration data for the Pasadena Monk Hill wells (Figure 1), nitrate concentrations in Well 52, Ventura Well, and Windsor Well were relatively consistent, and in general, were below the MCL when all three wells were operating. The reason for this consistent nature may be attributed to the rather large areas of influence these wells have while pumping (Figures 12 and 16). As observed on Figures 12 and 16, the cone of depression in the potentiometric surface extends a relatively large distance. Thus, groundwater from the areas of higher nitrate concentrations (i.e., VWC wells and the La Cañada Irrigation District) are combined with the groundwater from areas of lower nitrate concentrations (i.e., from the north and northeast portions of the basin). After the wells were shut down in 2002, nitrate concentrations increased (Figure 1) because the natural groundwater flow to the southeast was reestablished. As evidenced on Figures 10 and 14, when the Pasadena wells are not pumping, groundwater flow is to the southeast; thus groundwater from the areas of higher nitrate concentrations (i.e., VWC wells and the La Cañada Irrigation District) naturally flows towards the Pasadena wells. Nitrate concentrations and groundwater flow changes also are evident for MW-19. When the Pasadena wells were operating, nitrate concentrations in MW-19 were consistent and below the MCL (Figure 7). However, nitrate concentrations in Layers 2 and 3 of MW-19 started increasing after the Pasadena wells were shut down. The area of influence the Pasadena wells, Windsor Well in particular, has on MW-19 is significant (Figures 12 and 16). When this area of influence was removed (i.e., the Pasadena wells shut down), the natural groundwater flow to the southeast was reestablished, thereby resulting in higher nitrate concentrations in MW-19.

Based on the results of the groundwater flow evaluation, it is anticipated that nitrate concentrations comparable to historical concentrations (before 2002) will be observed once the production wells have been in operation for some period of time.

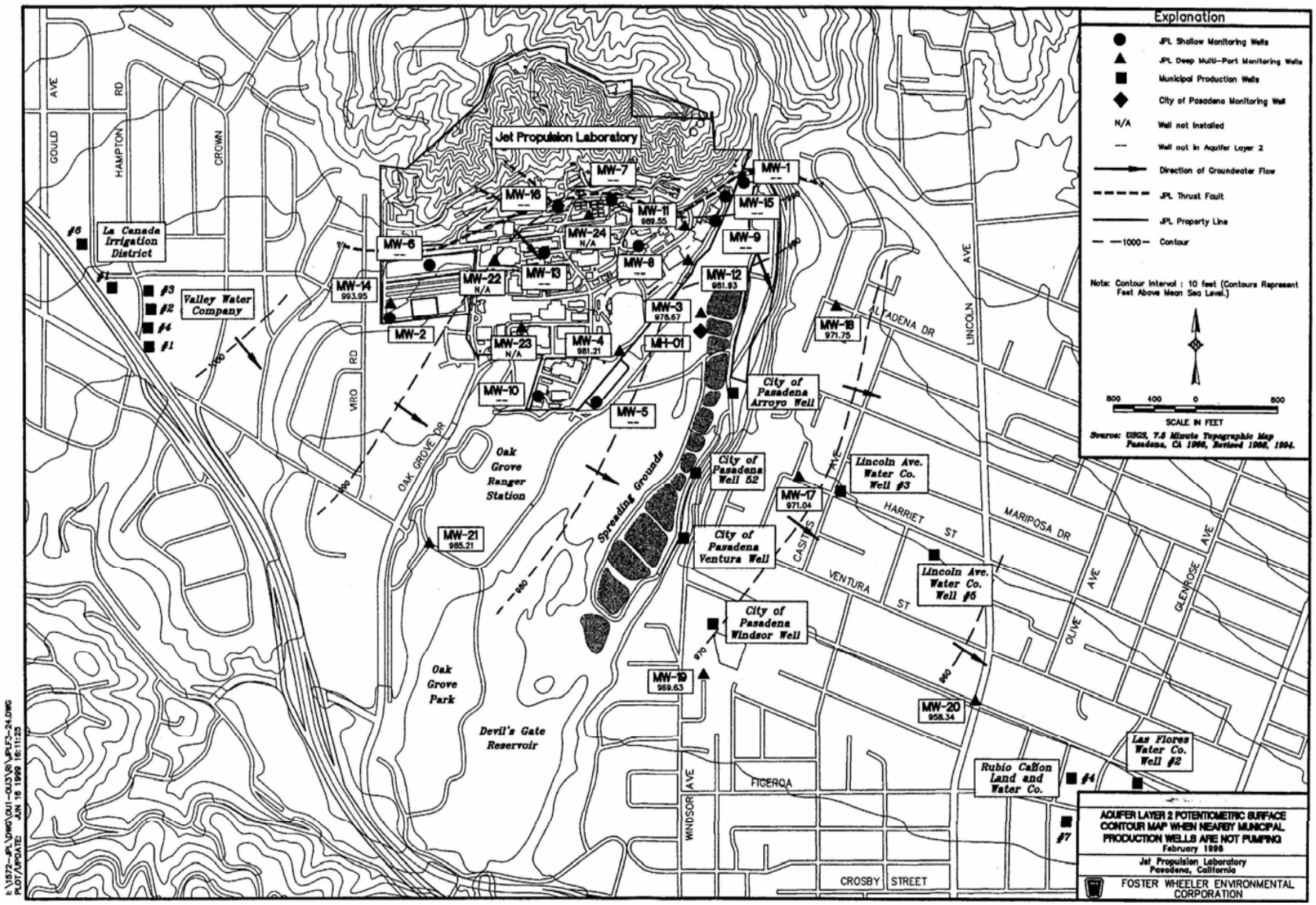

Figure 10. Aquifer Layer 2 Potentiometric Surface Contour Map When Nearby Municipal Production Wells Are Not Operating

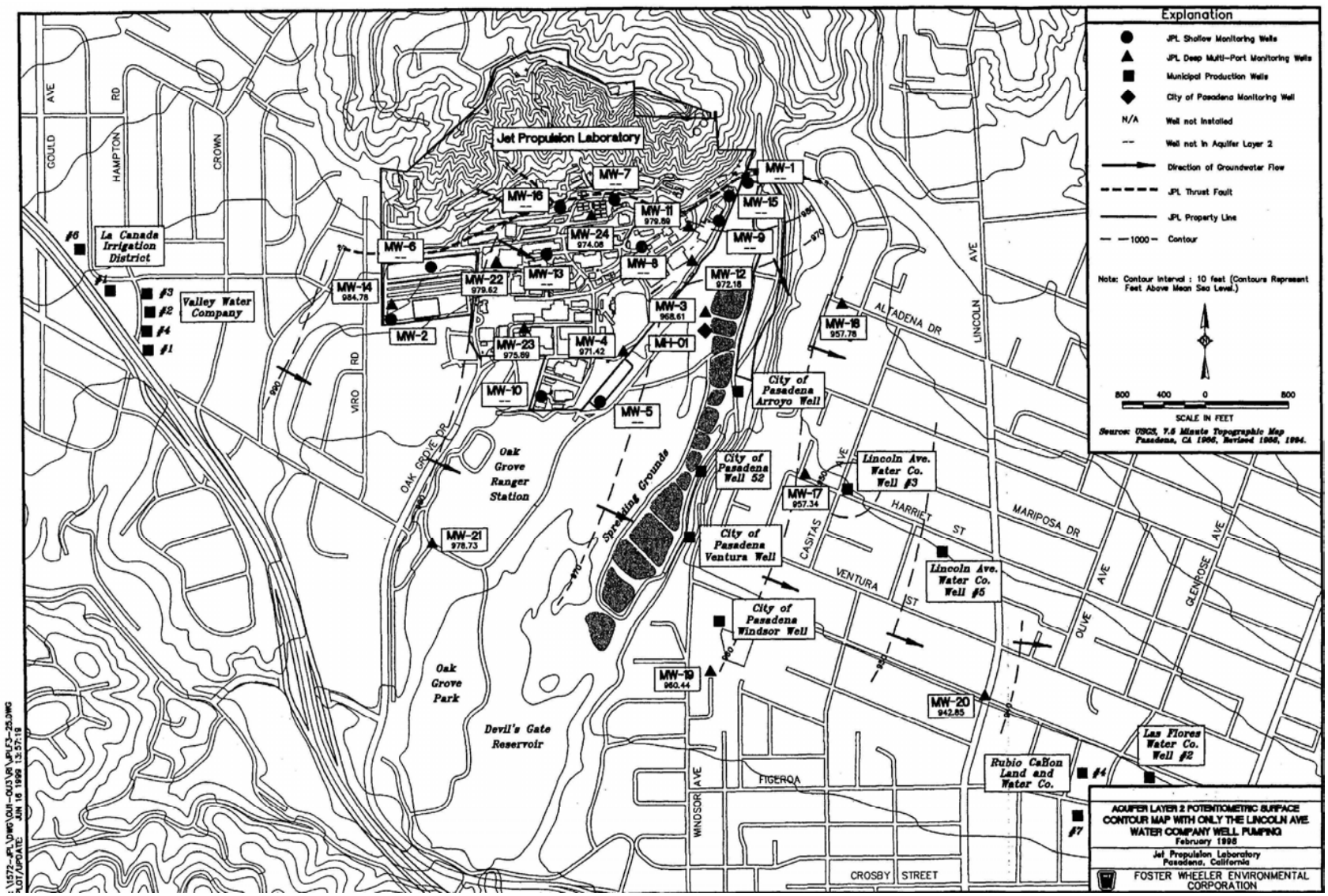

Figure 11. Aquifer Layer 2 Potentiometric Surface Contour Map With LAWC #3 Well Pumping

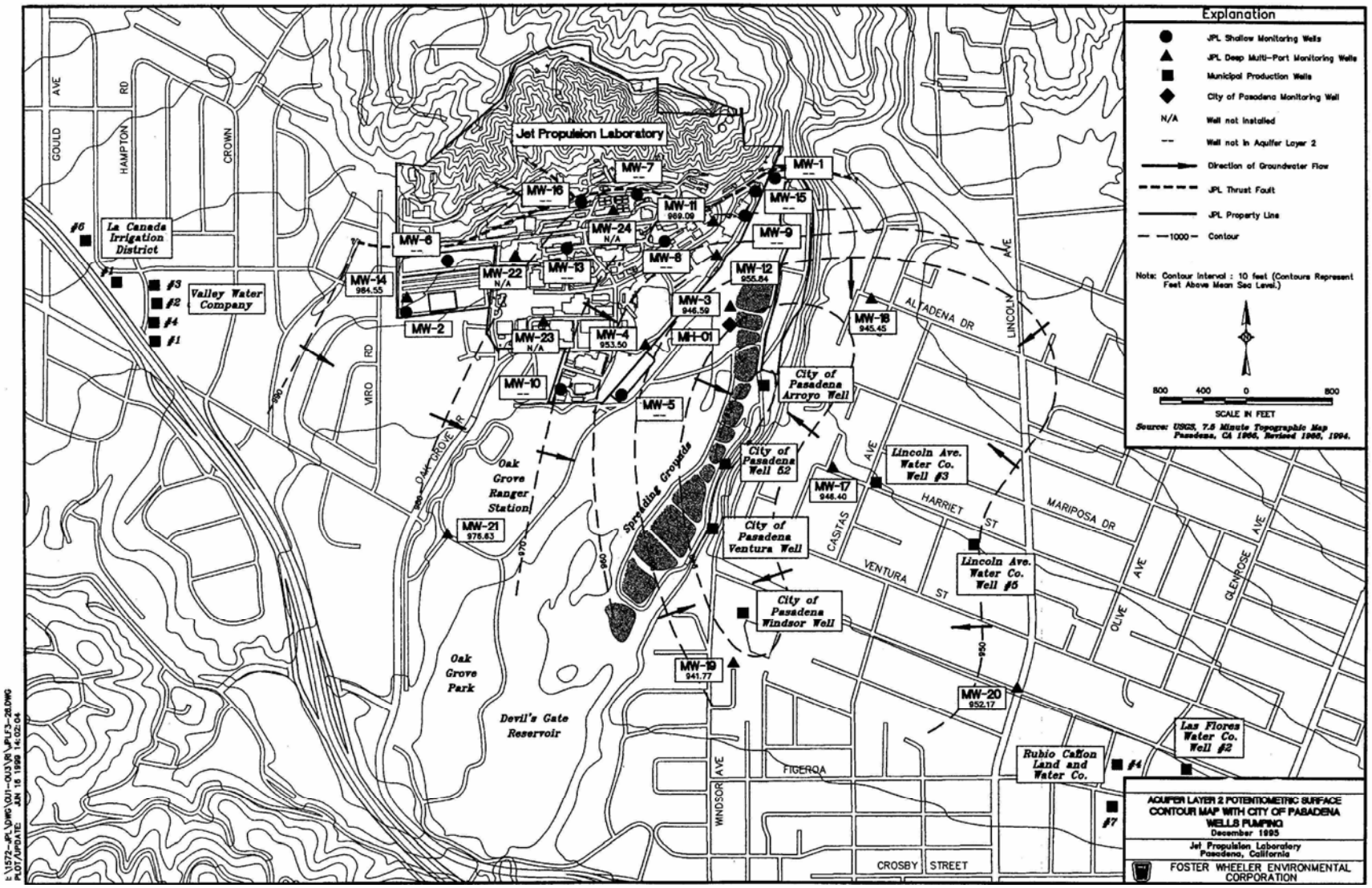

Figure 12. Aquifer Layer 2 Potentiometric Surface Contour Map With City of Pasadena Wells Pumping

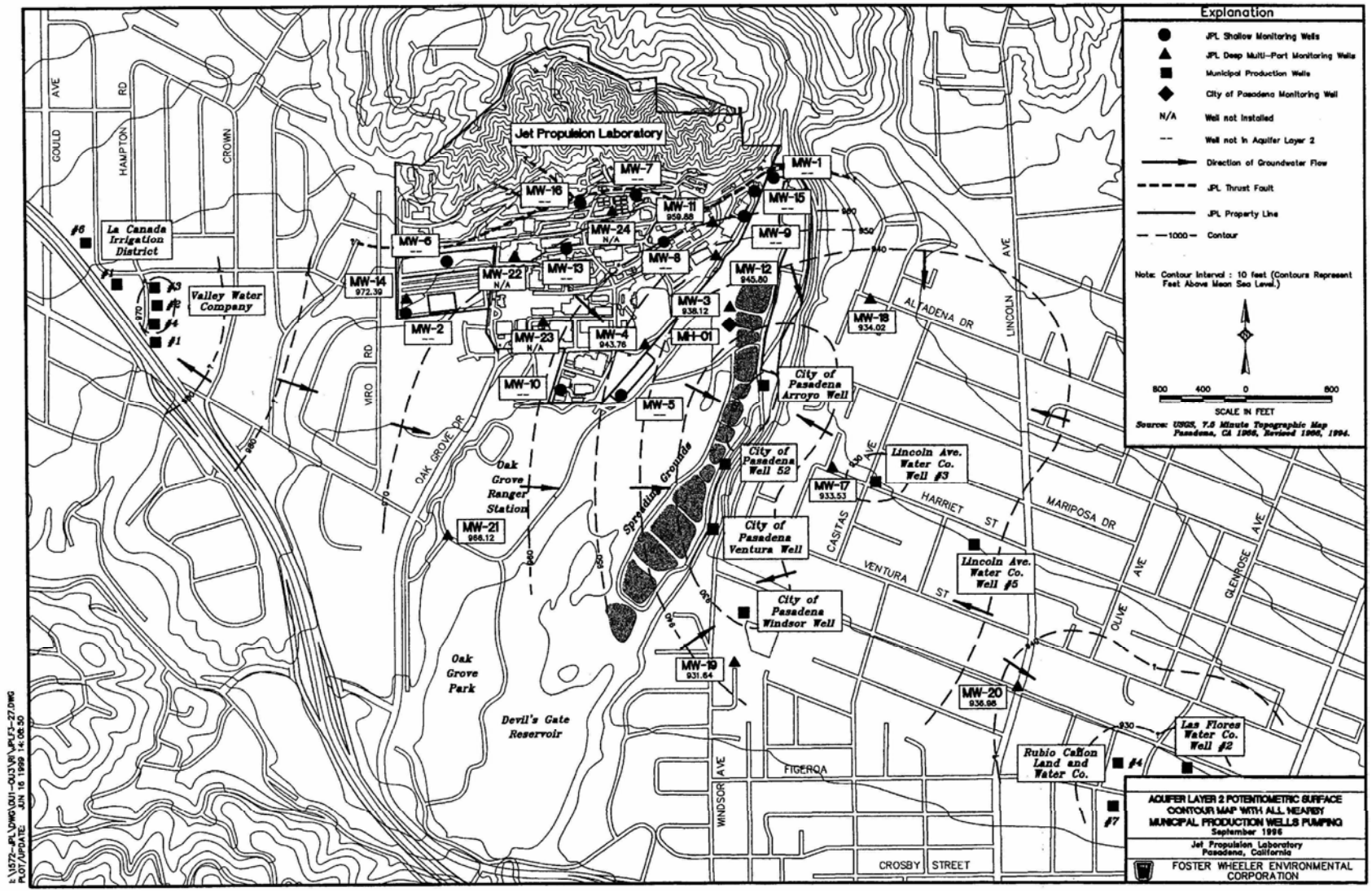

Figure 13. Aquifer Layer 2 Potentiometric Surface Contour Map With All Nearby Municipal Production Wells Pumping

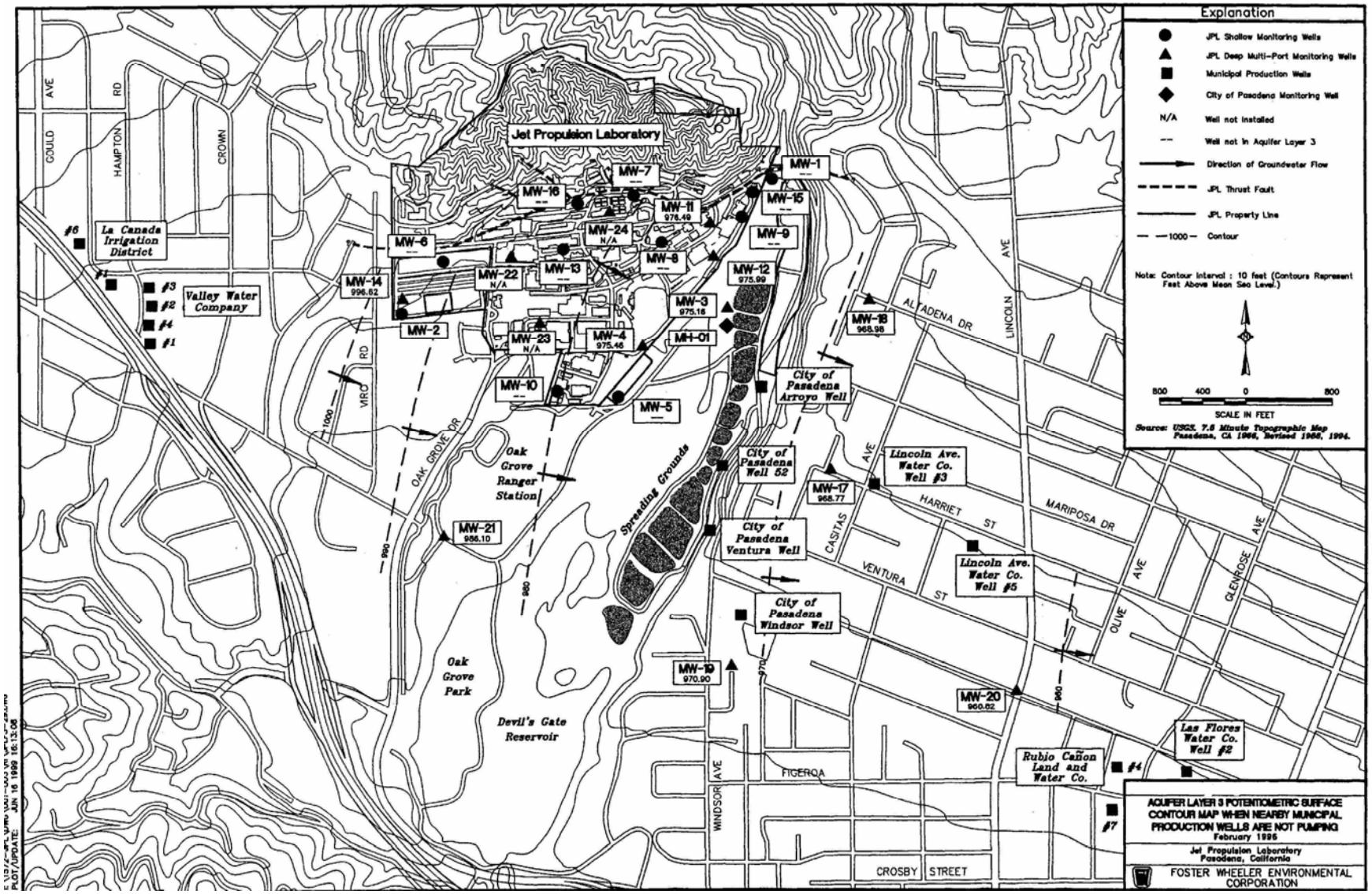

Figure 14. Aquifer Layer 3 Potentiometric Surface Contour Map When Nearby Municipal Production Wells Are Not Operating

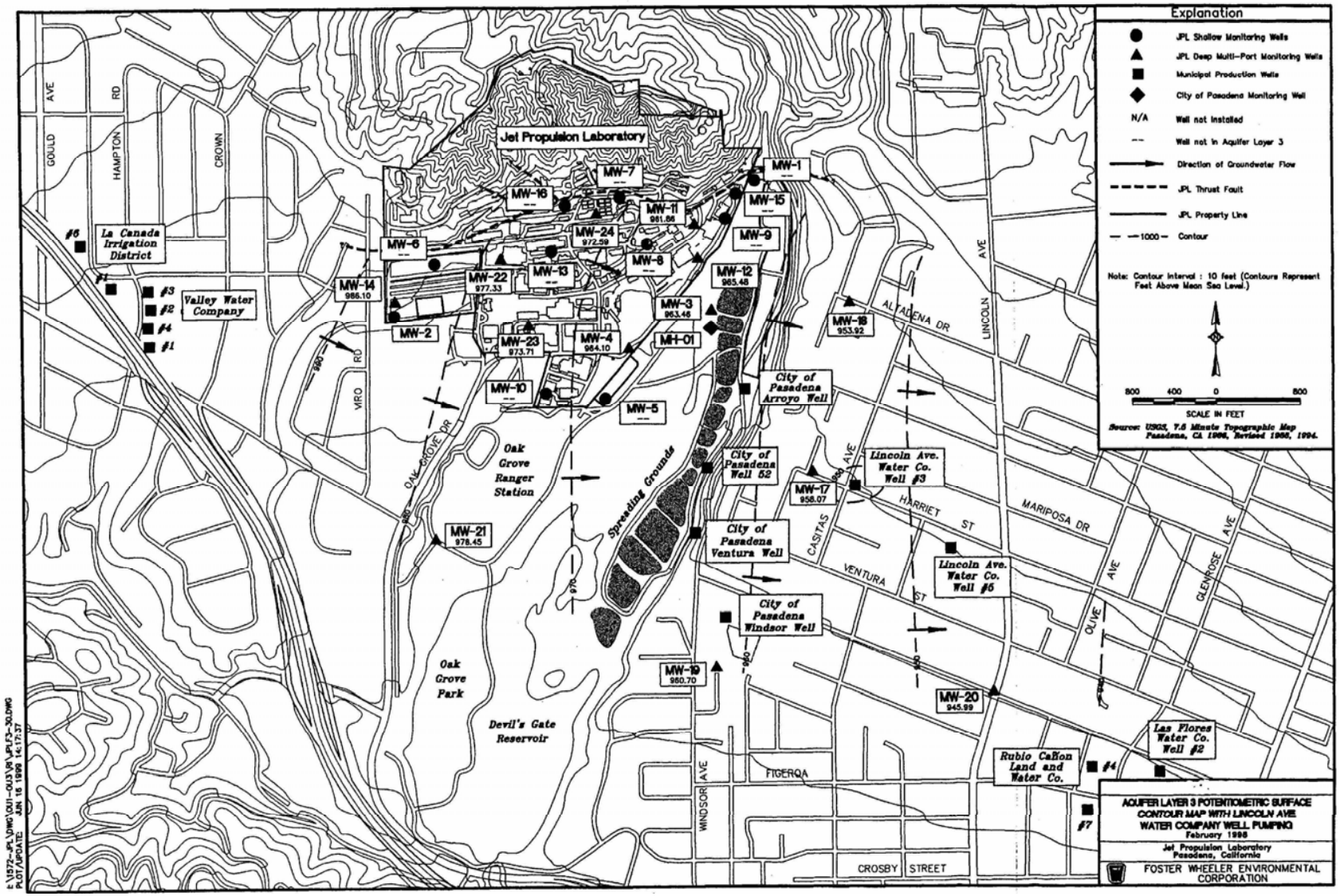

Figure 15. Aquifer Layer 3 Potentiometric Surface Contour Map With LAWC #3 Well Pumping

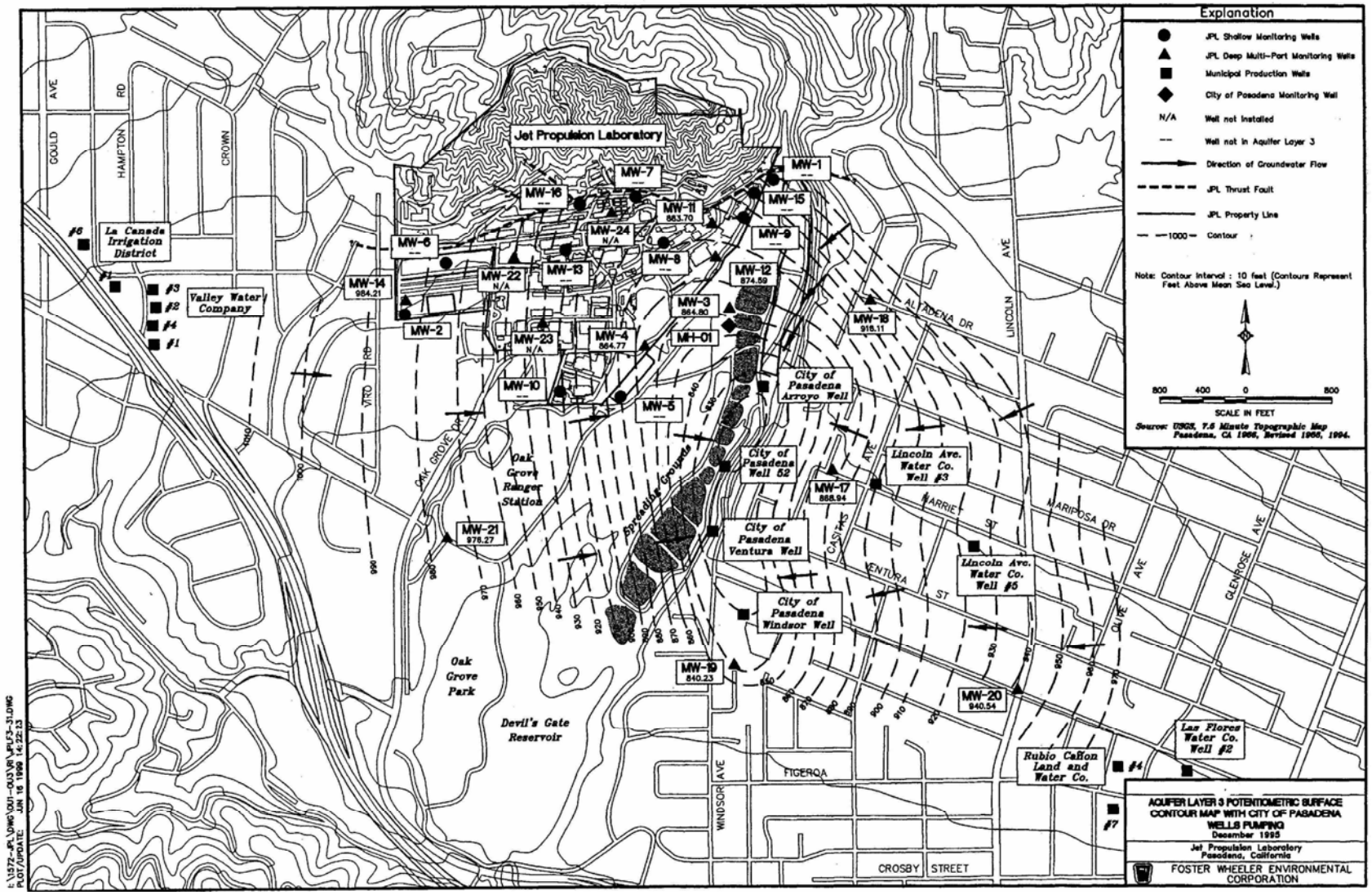

Figure 16. Aquifer Layer 3 Potentiometric Surface Contour Map With City of Pasadena Wells Pumping

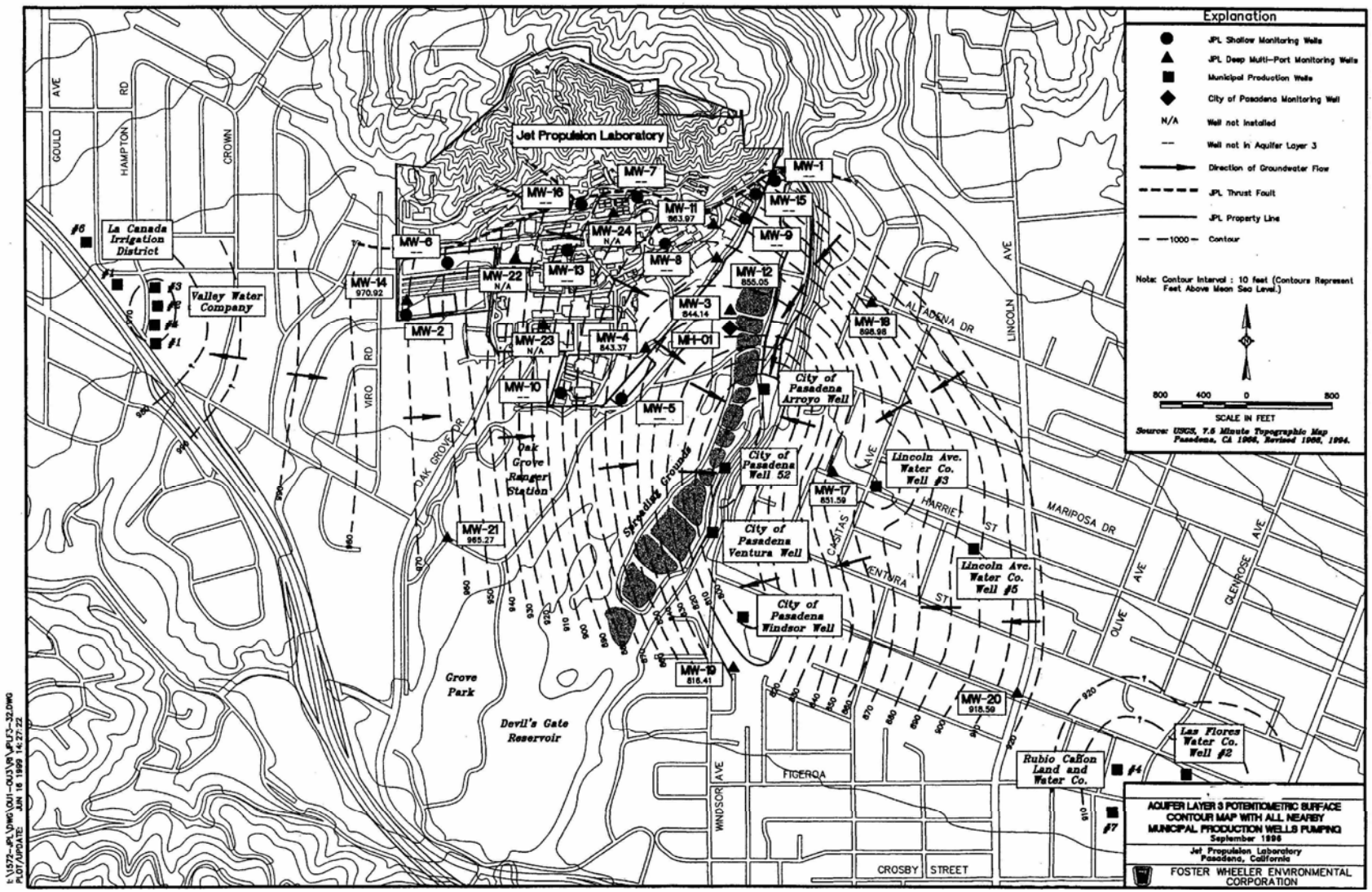

Figure 17. Aquifer Layer 3 Potentiometric Surface Contour Map With All Nearby Municipal Production Wells Pumping

Attachment 1
Nitrate Analytical Data

Well	Date	Result	Units
Arroyo	8/22/86	25.4	mg/L
	9/28/89	1.8	mg/L
	9/28/90	14	mg/L
	6/23/93	13.05	mg/L
	12/6/95	9.6	mg/L
	4/16/96	6.54	mg/L
	2/21/97	5.96	mg/L
Well 52	9/28/90	31	mg/L
	6/23/93	27.64	mg/L
	12/6/95	18.3	mg/L
	4/16/96	17.31	mg/L
	2/21/97	30.15	mg/L
	1/7/98	41.7	mg/L
	6/3/98	17.3	mg/L
	7/1/98	16.83	mg/L
	8/5/98	15.99	mg/L
	2/3/99	22.71	mg/L
	3/4/99	17.56	mg/L
	5/12/99	28.25	mg/L
	5/24/99	18.7	mg/L
	6/2/99	16.87	mg/L
	6/10/99	13.64	mg/L
	7/7/99	14.15	mg/L
	7/14/99	14.53	mg/L
	8/4/99	15.58	mg/L
	8/9/99	15.76	mg/L
	8/12/99	13.58	mg/L
	10/11/99	6.45	mg/L
	2/2/00	19.88	mg/L
	2/10/00	15.3	mg/L
	3/2/00	16	mg/L
	3/29/00	25	mg/L
	5/1/00	15.36	mg/L
	6/8/00	22.48	mg/L
	7/12/00	14.2	mg/L
	8/2/00	14	mg/L
	9/12/00	17	mg/L
	10/4/00	19.12	mg/L
	11/15/00	14.78	mg/L
	12/13/00	16.31	mg/L
	1/23/01	32.91	mg/L
	3/14/01	25.33	mg/L
	3/21/01	20.33	mg/L
	3/29/01	21.79	mg/L
	4/4/01	14.53	mg/L
	5/22/01	23.1	mg/L
	5/30/01	16.37	mg/L
	6/5/01	17.77	mg/L
	7/3/01	18.24	mg/L
	7/18/01	54.99	mg/L
	8/15/01	16.72	mg/L
	9/19/01	15.58	mg/L
	10/3/01	18.14	mg/L
	11/7/01	15.92	mg/L

Well	Date	Result	Units
	12/5/01	15.85	mg/L
	1/9/02	16	mg/L
	4/24/02	38.06	mg/L
	5/15/02	38.36	mg/L
	6/5/02	39.8	mg/L
	7/17/02	44.1	mg/L
	8/14/02	47	mg/L
	9/18/02	50.8	mg/L
	10/9/02	51.7	mg/L
Ventura	7/23/87	27	mg/L
	9/28/90	59	mg/L
	6/23/93	57.71	mg/L
	5/22/96	42.42	mg/L
	1/8/98	32.8	mg/L
	5/6/98	36.79	mg/L
	6/3/98	37.62	mg/L
	7/1/98	38.67	mg/L
	8/5/98	36.39	mg/L
	1/6/99	31.33	mg/L
	2/3/99	31.33	mg/L
	3/4/99	38.18	mg/L
	5/12/99	37.78	mg/L
	5/24/99	34.7	mg/L
	6/2/99	30.35	mg/L
	6/10/99	30.95	mg/L
	7/7/99	32.99	mg/L
	7/14/99	35.45	mg/L
	8/4/99	36.36	mg/L
	8/9/99	36.42	mg/L
	8/12/99	35.46	mg/L
	10/11/99	30.87	mg/L
	2/2/00	19.88	mg/L
	2/10/00	36.4	mg/L
	3/2/00	35	mg/L
	5/1/00	34.57	mg/L
	6/8/00	31.72	mg/L
	7/12/00	33.12	mg/L
	8/2/00	36	mg/L
	9/12/00	40	mg/L
	10/4/00	28.22	mg/L
	11/15/00	33.59	mg/L
	12/13/00	40.07	mg/L
	1/23/01	55.19	mg/L
	5/22/01	46.36	mg/L
	5/30/01	39.41	mg/L
	6/5/01	43.37	mg/L
	7/3/01	44.92	mg/L
	7/18/01	54.99	mg/L
	8/15/01	46.93	mg/L
	9/19/01	37.51	mg/L
	10/3/01	43.63	mg/L
	11/7/01	38.77	mg/L
	12/5/01	36.55	mg/L
	1/9/02	35.58	mg/L
	4/24/02	56.8	mg/L

Well	Date	Result	Units
	5/15/02	53.52	mg/L
	6/5/02	51.7	mg/L
	7/17/02	54	mg/L
	8/14/02	56.5	mg/L
	9/18/02	59.6	mg/L
	10/9/02	61.7	mg/L
Windsor	8/18/88	21	mg/L
	6/23/93	32.22	mg/L
	12/6/95	23.2	mg/L
	4/16/96	22.08	mg/L
	2/21/97	23.89	mg/L
	1/8/98	20.8	mg/L
	4/13/98	20.5	mg/L
	5/6/98	22.09	mg/L
	6/3/98	23.33	mg/L
	7/1/98	23.97	mg/L
	8/5/98	23.3	mg/L
	1/6/99	22.63	mg/L
	2/3/99	21.65	mg/L
	3/4/99	23.94	mg/L
	5/12/99	28.06	mg/L
	5/24/99	24.9	mg/L
	6/2/99	22.35	mg/L
	6/10/99	20.51	mg/L
	7/7/99	20.85	mg/L
	7/14/99	22.4	mg/L
	8/4/99	23.58	mg/L
	8/9/99	23.11	mg/L
	8/12/99	21.19	mg/L
	10/11/99	19.1	mg/L
	2/2/00	19.88	mg/L
	2/10/00	23.3	mg/L
	3/2/00	24	mg/L
	3/2/00	23	mg/L
	5/1/00	22.51	mg/L
	6/8/00	21.13	mg/L
	7/12/00	21.25	mg/L
	8/2/00	22	mg/L
	9/12/00	26	mg/L
	10/4/00	29.65	mg/L
	11/8/00	22.49	mg/L
	12/13/00	23.89	mg/L
	1/23/01	23.49	mg/L
	3/14/01	25.73	mg/L
	3/21/01	26.17	mg/L
	3/29/01	28.83	mg/L
	4/4/01	19.62	mg/L
	4/12/01	21.17	mg/L
	4/18/01	23.96	mg/L
	4/25/01	19.92	mg/L
	5/2/01	21.79	mg/L
	5/9/01	24.44	mg/L
	5/16/01	24.35	mg/L
	5/22/01	26.64	mg/L
	5/30/01	23.51	mg/L

Well	Date	Result	Units
	6/5/01	26.76	mg/L
	7/3/01	28.29	mg/L
	8/15/01	27.18	mg/L
	9/19/01	23.42	mg/L
	10/3/01	26.66	mg/L
	11/7/01	23.25	mg/L
	12/5/01	21.86	mg/L
	1/9/02	21.38	mg/L
	4/24/02	26.34	mg/L
	5/15/02	25.36	mg/L
	6/5/02	31.5	mg/L
	7/17/02	48.9	mg/L
	8/14/02	48.6	mg/L
	9/18/02	55.6	mg/L
	10/9/02	50	mg/L
LAWC 3	4/16/93	10.1	mg/L
	4/4/94	5.9	mg/L
	6/12/95	8.6	mg/L
	6/17/96	6.3	mg/L
	6/2/97	6.16	mg/L
	6/1/98	5.8	mg/L
	6/1/99	4	mg/L
	5/8/00	4.52	mg/L
	5/23/01	4.2	mg/L
	5/5/02	18	mg/L
	8/5/02	4.3	mg/L
	4/18/05	11	mg/L
	5/3/05	12.4	mg/L
LAWC 5	4/16/93	12.3	mg/L
	4/4/94	10.5	mg/L
	6/12/95	15.5	mg/L
	6/17/96	17.2	mg/L
	6/2/97	19.3	mg/L
	6/1/98	14.1	mg/L
	6/1/99	14.5	mg/L
	5/8/00	18.2	mg/L
	5/23/01	12	mg/L
	5/5/02	14	mg/L
	8/5/02	14	mg/L
	4/18/05	13	mg/L
	5/3/05	2.9	mg/L
Las Flores	2/26/90	33.88	mg/L
	9/19/94	43.9	mg/L
	12/19/94	42.1	mg/L
	12/11/95	40.2	mg/L
	12/9/96	35.1	mg/L
	11/3/97	41.5	mg/L
	12/8/97	39.1	mg/L
	5/11/98	46.3	mg/L
	5/13/98	41	mg/L
	7/13/98	43.6	mg/L
	12/14/98	39.8	mg/L
	1/25/99	41.4	mg/L
	3/22/99	42.4	mg/L
	5/10/99	43.4	mg/L

Well	Date	Result	Units
	7/12/99	47.1	mg/L
	7/15/99	50.4	mg/L
	7/26/99	45.2	mg/L
	8/3/99	49	mg/L
	8/9/99	45.9	mg/L
	8/16/99	48	mg/L
	8/23/99	47.6	mg/L
	8/30/99	46.8	mg/L
	9/7/99	41.8	mg/L
	9/13/99	49.5	mg/L
	9/20/99	49.1	mg/L
	9/27/99	48.1	mg/L
	10/4/99	48.1	mg/L
	10/11/99	48.8	mg/L
	10/18/99	45.7	mg/L
	10/25/99	42.3	mg/L
	11/1/99	45.1	mg/L
	11/8/99	38.8	mg/L
	11/15/99	44.4	mg/L
	11/22/99	40.3	mg/L
	11/29/99	43.6	mg/L
	12/6/99	43.8	mg/L
	12/13/99	52	mg/L
	12/13/99	48.6	mg/L
	12/20/99	43.4	mg/L
	1/3/00	43.5	mg/L
	1/11/00	38.5	mg/L
	1/17/00	44.3	mg/L
	1/24/00	44.2	mg/L
	1/31/00	44.4	mg/L
	2/7/00	42.2	mg/L
	2/14/00	44.6	mg/L
	2/22/00	45.8	mg/L
	2/28/00	40	mg/L
	3/6/00	47	mg/L
	3/12/00	44	mg/L
	3/20/00	44	mg/L
	3/27/00	44	mg/L
	4/3/00	43	mg/L
	4/10/00	44	mg/L
	4/17/00	44	mg/L
	4/24/00	45	mg/L
	5/1/00	44.6	mg/L
	5/8/00	47.6	mg/L
	5/15/00	47.9	mg/L
	5/22/00	46.1	mg/L
	5/30/00	48.1	mg/L
	6/5/00	44.5	mg/L
	6/12/00	48	mg/L
	6/19/00	47.6	mg/L
	6/26/00	43.5	mg/L
	7/3/00	44.5	mg/L
	7/10/00	44.2	mg/L
	8/16/00	60.3	mg/L
	8/21/00	53.7	mg/L

Well	Date	Result	Units
	8/28/00	58	mg/L
	9/5/00	52	mg/L
	9/11/00	50	mg/L
	9/18/00	49	mg/L
	9/25/00	47	mg/L
	10/2/00	47	mg/L
	10/9/00	45	mg/L
	10/16/00	38	mg/L
	10/23/00	44.3	mg/L
	10/30/00	46	mg/L
	11/6/00	40.3	mg/L
	11/13/00	45.9	mg/L
	11/27/00	46.3	mg/L
	12/4/00	40.6	mg/L
	12/11/00	45.4	mg/L
	12/18/00	44.6	mg/L
	12/26/00	39.8	mg/L
	1/2/01	45	mg/L
	1/8/01	39	mg/L
	1/15/01	44	mg/L
	1/22/01	45	mg/L
	1/29/01	45	mg/L
	2/5/01	44	mg/L
	2/12/01	39	mg/L
	2/20/01	41	mg/L
	2/26/01	44	mg/L
	3/5/01	38	mg/L
	3/12/01	42	mg/L
	3/19/01	37	mg/L
	3/26/01	46	mg/L
	4/2/01	40	mg/L
	4/9/01	44	mg/L
	4/16/01	45	mg/L
	4/23/01	45	mg/L
	4/30/01	45	mg/L
	5/7/01	46	mg/L
	5/14/01	48	mg/L
	5/21/01	42	mg/L
	5/29/01	47	mg/L
	6/4/01	48	mg/L
	6/11/01	52	mg/L
	6/18/01	47	mg/L
	6/25/01	51	mg/L
	7/2/01	58	mg/L
	7/9/01	46	mg/L
	7/16/01	46	mg/L
	7/23/01	48	mg/L
	7/30/01	46	mg/L
	8/6/01	47	mg/L
	8/13/01	49	mg/L
	8/20/01	50	mg/L
	8/27/01	56	mg/L
	9/4/01	58	mg/L
	9/10/01	50	mg/L
	9/17/01	50	mg/L

Well	Date	Result	Units
	9/24/01	50	mg/L
	10/1/01	55	mg/L
	10/8/01	49	mg/L
	10/15/01	47	mg/L
	10/22/01	47	mg/L
	10/29/01	47	mg/L
	11/5/01	48	mg/L
	11/12/01	47	mg/L
	11/19/01	47	mg/L
	11/26/01	45	mg/L
	12/3/01	46	mg/L
	12/10/01	46	mg/L
	12/17/01	47	mg/L
	12/26/01	48	mg/L
	1/2/02	49	mg/L
	1/7/02	47	mg/L
	1/14/02	46	mg/L
	1/21/02	46	mg/L
	1/28/02	47	mg/L
	2/4/02	47	mg/L
	2/11/02	45	mg/L
	2/19/02	45	mg/L
	2/25/02	46	mg/L
	3/4/02	46	mg/L
	3/11/02	46	mg/L
	3/18/02	46	mg/L
	3/25/02	45	mg/L
	4/1/02	45	mg/L
	4/8/02	41	mg/L
	4/15/02	48	mg/L
	4/22/02	48	mg/L
	4/29/02	46	mg/L
	5/6/02	44	mg/L
	5/13/02	49	mg/L
	5/20/02	49	mg/L
	5/28/02	52	mg/L
	6/3/02	50	mg/L
	6/10/02	43	mg/L
	6/17/02	46	mg/L
	6/24/02	50	mg/L
	7/1/02	50	mg/L
	7/8/02	51	mg/L
	7/15/02	41	mg/L
	7/22/02	49	mg/L
	7/29/02	51	mg/L
	8/5/02	49	mg/L
	8/12/02	48	mg/L
	8/26/02	50	mg/L
	9/3/02	49	mg/L
	9/9/02	47	mg/L
	9/16/02	48	mg/L
	9/23/02	50	mg/L
	4/28/03	46	mg/L
Rubio 4	6/20/89	42.8	mg/L
	5/4/92	21.3	mg/L

Well	Date	Result	Units
	5/18/92	26	mg/L
	5/20/92	34.8	mg/L
	5/27/92	41	mg/L
	6/8/92	51.8	mg/L
	6/15/92	53.4	mg/L
	6/18/92	53.4	mg/L
	6/18/92	36.2	mg/L
	6/22/92	48.9	mg/L
	6/29/92	54.1	mg/L
	3/8/93	11.5	mg/L
	3/15/93	11	mg/L
	1/10/94	26.4	mg/L
	4/4/94	39.8	mg/L
	7/5/94	42.6	mg/L
	10/3/94	33.4	mg/L
	12/27/94	26.4	mg/L
	1/3/95	18.7	mg/L
	4/10/95	24.7	mg/L
	6/13/95	39.8	mg/L
	7/5/95	46.5	mg/L
	10/2/95	41.5	mg/L
	1/2/96	41.7	mg/L
	7/1/96	41.3	mg/L
	10/7/96	36.5	mg/L
	1/6/97	16.6	mg/L
	4/7/97	24	mg/L
	4/21/97	30.6	mg/L
	7/7/97	37.6	mg/L
	10/6/97	34.3	mg/L
	1/5/98	21.3	mg/L
	4/6/98	16.2	mg/L
	7/6/98	36.3	mg/L
	10/5/98	38.5	mg/L
	1/4/99	24.7	mg/L
	4/5/99	15.9	mg/L
	7/6/99	36.7	mg/L
	8/2/99	38.4	mg/L
	10/4/99	39.5	mg/L
	1/3/00	18.9	mg/L
	4/3/00	19	mg/L
	4/24/00	16	mg/L
	7/3/00	22	mg/L
	10/2/00	20.9	mg/L
	12/4/00	21.4	mg/L
	1/2/01	20	mg/L
	1/29/01	14	mg/L
	4/2/01	16	mg/L
	6/18/01	33	mg/L
	7/2/01	36	mg/L
	10/8/01	22	mg/L
	1/7/02	27	mg/L
	4/2/02	14	mg/L
	7/1/02	33	mg/L
	10/7/02	18	mg/L
	1/7/03	14	mg/L

Well	Date	Result	Units
	1/13/03	14	mg/L
Rubio 7	5/4/92	13.4	mg/L
	5/18/92	17.4	mg/L
	5/20/92	16.5	mg/L
	5/26/92	22.2	mg/L
	6/1/92	23.6	mg/L
	6/8/92	22.6	mg/L
	6/15/92	22.5	mg/L
	6/18/92	22.5	mg/L
	6/22/92	21.4	mg/L
	3/8/93	7.4	mg/L
	3/15/93	9.1	mg/L
	6/7/93	20.3	mg/L
	1/10/94	10.1	mg/L
	4/4/94	18.9	mg/L
	7/5/94	23.4	mg/L
	10/3/94	21.8	mg/L
	12/27/94	10.2	mg/L
	1/3/95	10.1	mg/L
	4/10/95	17.4	mg/L
	6/13/95	22.6	mg/L
	7/5/95	23.3	mg/L
	10/2/95	26	mg/L
	1/2/96	31.3	mg/L
	7/1/96	26	mg/L
	10/7/96	20.8	mg/L
	1/6/97	25.6	mg/L
	4/7/97	24.3	mg/L
	4/21/97	26.1	mg/L
	7/7/97	24.7	mg/L
	10/6/97	26.4	mg/L
	1/5/98	26.8	mg/L
	4/6/98	13.3	mg/L
	7/6/98	24.4	mg/L
	10/5/98	24.3	mg/L
	1/4/99	22.5	mg/L
	4/5/99	19.7	mg/L
	7/6/99	22.2	mg/L
	10/4/99	24.1	mg/L
	1/3/00	22.2	mg/L
	4/3/00	19	mg/L
	4/24/00	18	mg/L
	7/3/00	24.7	mg/L
	10/2/00	23.5	mg/L
	12/4/00	21.9	mg/L
	1/2/01	21	mg/L
	1/29/01	21	mg/L
	4/2/01	17	mg/L
	6/18/01	23	mg/L
	7/2/01	26	mg/L
	10/8/01	26	mg/L
	1/7/02	24	mg/L
	4/2/02	20	mg/L
	7/1/02	23	mg/L
	10/7/02	13	mg/L

Well	Date	Result	Units
	1/7/03	13	mg/L
	1/13/03	13	mg/L
			mg/L
Valley #1	6/20/1989	32	mg/L
	3/6/1990	58.5	mg/L
	12/11/1991	60.4	mg/L
	2/2/1993	61.1	mg/L
	4/12/1993	57	mg/L
	6/1/1993	57	mg/L
	5/16/1994	26	mg/L
	6/6/1994	24	mg/L
	6/17/1994	24.64	mg/L
	12/13/1994	42.24	mg/L
	3/9/1995	7.48	mg/L
	6/14/1995	32.56	mg/L
	7/10/1995	32.56	mg/L
	8/1/1995	33.44	mg/L
	9/5/1995	44	mg/L
	10/2/1995	44	mg/L
	5/1/1996	7.48	mg/L
	6/5/1996	27.28	mg/L
	7/9/1996	30.8	mg/L
	8/6/1996	32.56	mg/L
	5/12/1997	33.44	mg/L
	6/10/1997	29.92	mg/L
	7/7/1997	34.76	mg/L
	8/11/1997	40.04	mg/L
	5/4/1998	19.8	mg/L
	6/1/1998	29.04	mg/L
	6/15/1998	26.84	mg/L
	8/3/1998	36.08	mg/L
	9/1/1998	38.72	mg/L
	10/5/1998	42.68	mg/L
	5/3/1999	8.8	mg/L
	7/7/1999	73.92	mg/L
	8/2/1999	41.8	mg/L
	9/7/1999	47.96	mg/L
	10/4/1999	51.48	mg/L
	5/1/2000	19.008	mg/L
	6/5/2000	31.196	mg/L
	7/5/2000	40.216	mg/L
	8/1/2000	43.296	mg/L
	10/2/2000	49	mg/L
	5/1/2001	11.88	mg/L
	6/4/2001	26.84	mg/L
	8/6/2001	42.68	mg/L
	9/4/2001	48.4	mg/L
	10/1/2001	48.4	mg/L
	4/23/2002	5.28	mg/L
	5/1/2002	4.84	mg/L
	6/3/2002	22.44	mg/L
	7/1/2002	27.72	mg/L
	8/5/2002	33.44	mg/L
	9/3/2002	35.2	mg/L
	10/2/2002	36.08	mg/L

Well	Date	Result	Units
Valley #2	12/30/1987	83.6	mg/L
	12/9/1993	70.4	mg/L
	7/5/1994	8.4	mg/L
	8/8/1994	57.2	mg/L
	9/6/1994	48.4	mg/L
	10/18/1994	52.8	mg/L
	11/7/1994	48.4	mg/L
	12/13/1994	61.6	mg/L
	3/9/1995	0	mg/L
	4/3/1995	0	mg/L
	4/20/1995	6.16	mg/L
	5/1/1995	16.72	mg/L
	6/5/1995	36.52	mg/L
	6/13/1995	39.16	mg/L
	7/5/1995	44	mg/L
	8/1/1995	48.4	mg/L
	9/5/1995	57.2	mg/L
	10/2/1995	52.8	mg/L
	11/6/1995	52.8	mg/L
	5/6/1996	2.2	mg/L
	6/3/1996	36.96	mg/L
	6/4/1996	36.96	mg/L
	7/1/1996	48.4	mg/L
	8/5/1996	52.8	mg/L
	9/3/1996	48.4	mg/L
	10/1/1996	48.4	mg/L
	5/5/1997	43.56	mg/L
	7/1/1997	52.8	mg/L
	8/4/1997	57.2	mg/L
	9/2/1997	52.8	mg/L
	1/12/1998	57.2	mg/L
	5/6/1998	0	mg/L
	6/1/1998	36.96	mg/L
	6/17/1998	57.2	mg/L
	7/6/1998	70.4	mg/L
	8/3/1998	70.4	mg/L
	9/1/1998	74.8	mg/L
	5/3/1999	0	mg/L
	6/1/1999	48.84	mg/L
	7/7/1999	69.96	mg/L
	8/2/1999	73.48	mg/L
	9/7/1999	77.44	mg/L
	5/1/2000	32.78	mg/L
	6/5/2000	70.84	mg/L
	7/5/2000	76.12	mg/L
	8/1/2000	70.4	mg/L
	9/7/2000	65	mg/L
	5/1/2001	2.64	mg/L
	6/4/2001	70.4	mg/L
	8/6/2001	79.2	mg/L
	10/1/2001	70.4	mg/L
	4/23/2002	0	mg/L
	5/6/2002	2.024	mg/L
	6/3/2002	0	mg/L
	7/1/2002	0	mg/L

Well	Date	Result	Units
	8/5/2002	0	mg/L
Valley #3	6/12/1995	61.6	mg/L
	7/31/1995	61.6	mg/L
	9/5/1995	57.2	mg/L
	12/5/1995	61.6	mg/L
	5/6/1996	39.16	mg/L
	6/5/1996	48.4	mg/L
	7/9/1996	66	mg/L
	8/6/1996	52.8	mg/L
	9/3/1996	48.4	mg/L
	10/1/1996	48.4	mg/L
	5/5/1997	3.52	mg/L
	7/1/1997	41.36	mg/L
	8/4/1997	52.8	mg/L
	9/2/1997	48.4	mg/L
	1/12/1998	9.68	mg/L
	5/6/1998	41.8	mg/L
	6/1/1998	48.4	mg/L
	6/15/1998	40.48	mg/L
	7/6/1998	52.8	mg/L
	8/3/1998	57.2	mg/L
	9/1/1998	61.6	mg/L
	5/3/1999	23.32	mg/L
	6/1/1999	69.08	mg/L
	7/7/1999	50.6	mg/L
	8/2/1999	69.08	mg/L
	9/7/1999	69.08	mg/L
	5/1/2000	45.32	mg/L
	6/5/2000	47.96	mg/L
	7/5/2000	71.72	mg/L
	8/1/2000	69.08	mg/L
	5/1/2001	40.92	mg/L
	6/4/2001	61.6	mg/L
	8/6/2001	70.4	mg/L
	10/1/2001	70.4	mg/L
	4/23/2002	20.68	mg/L
	5/6/2002	44	mg/L
	6/3/2002	70.4	mg/L
	7/1/2002	70.4	mg/L
	8/5/2002	66	mg/L
Valley #4	6/20/1989	53	mg/L
	3/6/1990	52.5	mg/L
	9/17/1991	55.8	mg/L
	12/11/1991	53.8	mg/L
	7/6/1992	53	mg/L
	9/16/1992	51.3	mg/L
	11/9/1992	36	mg/L
	2/2/1993	54.8	mg/L
	6/1/1993	57	mg/L
	9/27/1993	57	mg/L
	12/13/1993	57.2	mg/L
	6/17/1994	4.4	mg/L
	8/1/1994	40.04	mg/L
	11/15/1994	48.4	mg/L
	12/13/1994	52.8	mg/L

Well	Date	Result	Units
	3/9/1995	0	mg/L
	6/14/1995	36.08	mg/L
	7/10/1995	33.88	mg/L
	9/5/1995	44	mg/L
	5/6/1996	2.64	mg/L
	6/3/1996	31.24	mg/L
	6/4/1996	30.8	mg/L
	7/1/1996	37.84	mg/L
	8/5/1996	42.24	mg/L
	9/16/1996	44	mg/L
	5/12/1997	61.6	mg/L
	6/10/1997	52.8	mg/L
	7/7/1997	52.8	mg/L
	5/4/1998	10.12	mg/L
	6/1/1998	33.44	mg/L
	6/15/1998	40.92	mg/L
	8/3/1998	52.8	mg/L
	9/1/1998	52.8	mg/L
	10/5/1998	57.2	mg/L
	5/3/1999	2.772	mg/L
	6/1/1999	35.376	mg/L
	8/2/1999	53.68	mg/L
	9/7/1999	55.88	mg/L
	10/6/1999	62.92	mg/L
	5/1/2000	18.568	mg/L
	6/5/2000	46.64	mg/L
	7/5/2000	53.68	mg/L
	8/1/2000	54.56	mg/L
	10/2/2000	56	mg/L
	5/1/2001	11	mg/L
	6/4/2001	44	mg/L
	8/6/2001	61.6	mg/L
	9/4/2001	57.2	mg/L
	10/1/2001	57.2	mg/L
	4/23/2002	3.652	mg/L
	5/1/2002	3.784	mg/L
	6/3/2002	21.12	mg/L
	7/1/2002	23.76	mg/L
	8/5/2002	25.52	mg/L
	9/3/2002	25.08	mg/L
	10/2/2002	25.96	mg/L

Appendix D
Environmental Database Review

Appendix D
Environmental Database Review

An electronic environmental database search was completed to identify potential chemical sources and Chemicals. The search was completed using reasonably ascertainable environmental databases, including standard State and Federal sources in accordance with the American Society of Testing Materials (ASTM) Standard Practice E1527-00. A 1-mile radius, that includes the capture zone areas for Arroyo Well and Well 52, was used as the maximum search distance. Within the 1-mile radius area (herein referred to as the study area), the approximate minimum search distances as presented in ASTM 1527-00 were used. The ASTM list of records, including the approximate minimum search distances and the resulting number of sites identified within the ASTM search distance are provided in Table D-1 below. The acronyms for the record sources are defined in the following text.

TABLE D-1
Standard Environmental Records Sources

Record Sources	Approximate Minimum Search Distance (miles)	Number of Sites Identified
Federal ASTM Standard		
National Priority List	1	1
CERCLIS	1	3
RCRIS-LQG	1	1
RCRIS-SQG	1	7
ERNS	1	2
State ASTM Standard		
AWP	1	1
Cal-Sites	1	1
CHMIRS	1	3
CORTESE	1	7
State Landfill	2	2
WMUDS/SWAT	1	1
LUST	1	7
UST	1	3
CA FID UST	1	5
HIST UST	1	9
ASTM Supplemental		
FINDS Facility Index System	1	11

TABLE C-1 (Continued)
Standard Environmental Records Sources

Record Sources	Approximate Minimum Search Distance (miles)	Number of Sites Identified
Cleaners	1	4
CA WDS	1	2
CA SLIC	1	2
HAZNET	1	26
LA County HMS	1	26

The following paragraphs provide a brief description of each database for which at least one site was identified. A summary of the Federal database, and state and local database search results are presented in Tables D-2 and D-3, respectively. Figure 5-1 shows the locations of the identified sites.

FEDERAL ASTM STANDARD

CERCLIS: Comprehensive Environmental Response, Compensation and Liability Information System. The database contains data on potentially hazardous waste sites that have been reported by states to the United States Environmental Protection Agency (EPA). The sites include municipalities, private companies and persons, pursuant to Section 103 of the CERCLA. The CERCLIS database contains sites which are proposed or on the NPL. Additionally, the database lists sites that are in the screening and assessment phase for possible inclusion on the NPL. A review of the CERCLIS database identified three CERCLIS sites located within the 1-mile radius study area; one of the three sites is the Jet Propulsion Laboratory (JPL) facility.

RCRIS: Resource Conservation and Recovery Information System. The database includes selected information on sites that generate, store, treat, or dispose of hazardous waste as defined by the Resource Conservation and Recovery Act (RCRA). The database is maintained by the EPA and is divided into two categories based on the volume of hazardous waste generated on a monthly or annual basis. The two categories include the following:

- LQG – Large quantity generator
- SQG – Small quantity generator

A review of the RCRIS database identified one LQGs and seven SQGs located within the 1-mile radius study area.

ERNS: Emergency Response Notification System. The database records and stores information on reported releases of oil and hazardous substances. The database is maintained by the EPA. A review of the ERNS database identified two ERNS sites located within the 1-mile radius study area.

FEDERAL ASTM SUPPLEMENTAL

FINDS: Facility Index System. The database contains both facility information and "pointers" to other sources of information that contain detailed information on the following sources:

- RCRIS; Permit Compliance System (PCS)
- Aerometric Information Retrieval System (AIRS)
- FATES (FIFRA [Federal Insecticide Fungicide Rodenticide Act] and Toxic Substance Control Act (TSCA) Enforcement System, FTTS [FIFRA/TSCA Tracking System]
- CERCLIS; DOCKET (Enforcement Docket used to manage and track information on civil judicial enforcement cases for all environmental statutes)
- Federal Underground Injection Control (FURS)
- Federal Reporting Data System (FRDS)
- Surface Impoundments (SIA)
- TSCA Chemicals in Commerce Information System (CICS);
- Polychlorinated biphenyls(PCBs) Activity Database System (PADS)
- RCRA-J (medical waste transporters/disposers)
- Toxic Release Inventory System (TRIS)
- TSCA

The database is maintained by the EPA as part of the National Technical Information System (NTIS). A review of the database identified ten FINDS sites located within the 1-mile radius study area.

STATE ASTM STANDARD

CHMIRS: California Hazardous Material Incident Report System. The database contains information on reported hazardous material incidents such as accidental releases or spills. The database is maintained by the State of California Office of Emergency Services (OES). A review of the CHMIRS database identified two CHMIRS sites located within the 1-mile radius study area.

CORTESE: "Cortese" Hazardous Waste & Substances Sites List. The database stores public drinking water wells with detectable levels of contamination, hazardous substance sites selected for remedial action, sites with known toxic material identified through the abandoned site assessment program, sites with underground storage tanks (USTs) having a reportable release, and all solid waste disposal facilities from which there is known migration. The database is maintained by the California Environmental Protection Agency (CAL-EPA) Office of Emergency Information. A review of the CORTESE database identified six CORTESE sites located within the 1-mile radius study area.

SWF/LF: Solid Waste Facilities/Landfill Facilities. The database typically contains an inventory of solid waste disposal facilities or landfills located in a particular state. In California, the database is maintained by the State Integrated Waste Management Board as part of the Solid Waste Information System (SWIS) database. A review of the SWF/LF database identified one SWF/LF site located within the 1-mile radius study area.

WMUDS/SWAT: Waste Management Unit Database/Solid Waste Assessment Test. The database is used for tracking and inventory of waste management units; the database is maintained by the State Water Resources Control Board (SWRCB) of California. A review of the WMUDS/SWAT database, identified one WMUDS/SWAT site located within the 1-mile radius study area.

LUST: Leaking Underground Storage Tank. The database contains an inventory of reported LUST incidents; the database is maintained by SWRCB of California as part of the

LUST System. A review of the LUST database identified eight LUST sites located within the 1-mile radius study area.

UST: Underground Storage Tank. The database contains registered USTs, which are regulated under Subtitle I of RCRA. Data is provided by the SWRCB of California Hazardous Substance Storage Container Database. A review of the UST database identified two UST sites located within the 1-mile radius study area.

CA FID: California Facility Inventory Database. The database contains active and inactive UST locations; the database is maintained by SWRCB of California. A review of the California Facility Inventory Databases (CA FID) database identified four CA FID sites located within the 1-mile radius study area.

HIST UST: Historical UST Registered Database. The database contains historical information on registered USTs in the State of California. The database is maintained by SWRCB of California. A review of the historical (HIST) UST database identified seven HIST UST sites located within the 1-mile radius study area.

STATE OR LOCAL ASTM SUPPLEMENTAL

DRY CLEANERS: The database is proprietary and contains a list of dry cleaner-related facilities that have EPA ID numbers with certain Standard Industrial Classification (SIC) code designations. These facilities include the following:

- Family and commercially owned power laundries
- Garment pressing and cleaners' agents
- Linen supply houses
- Coin-operated laundries
- Dry cleaning plants except rugs
- Carpet and upholster cleaning
- Industrial cleaners
- Laundry and garment services

WDS: Waste Discharge System. The database is maintained by the SWRCB of California and contains information on sites with waste discharge permits issued by the State of California. A review of the WDS list identified two WDS sites located within the 1-mile radius study area.

SLIC: Spills, Leaks, Investigations, and Cleanup Site. The database is maintained by the SWRCB of California and contains information on SLIC sites registered with the SWRCB. A review of the database identified one SLIC site within the 1-mile radius study area.

HAZNET: Hazardous Waste Information System. Data is extracted from copies of hazardous waste manifests received each year by the Department of Toxic Substance Control (DTSC) of California. The annual volume of manifests is typically 700,000-1,000,000 annually, representing approximately 350,000-500,000 shipments. Data from non-California manifests and continuation sheets are not included. Some of the data may contain inaccurate information such as generator identification (ID) number, TSD ID number, waste category, and disposal method. The database is maintained by the DTSC and a review of the database identified 25 HAZNET sites located within the 1-mile radius study area.

HMS: Hazardous Materials System - Los Angeles County Industrial Waste and Underground Storage Tank Sites. The database is maintained by Los Angeles County and contains information about industrial waste and UST sites located and registered with Los Angeles County. A review of the database identified 25 HMS sites located within the 1-mile radius study area.

In addition to the aforementioned databases, additional databases were searched, but no sites were identified during the search of available records within the ASTM search radius within the study area. These additional databases include the following:

- **Federal ASTM Standard**
  - Proposed NPL - Proposed National Priority List Sites
  - CERC-NFRAP CERCLIS - No Further Remedial Action Planned
  - CORRACTS - Corrective Action Report
  - RCRIS-TSD - Resource Conservation and Recovery Information System – Treatment Storage and Disposal
- **Federal ASTM Supplemental**
  - CONSENT Superfund (CERCLA) Consent Decrees
  - ROD - Records Of Decision
  - Delisted NPL National Priority List Deletions
  - HMIRS - Hazardous Materials Information Reporting System
  - MLTS - Material Licensing Tracking System
  - MINES - Mines Master Index File
  - NPL Liens Federal Superfund Liens
  - PADS - PCB Activity Database System
  - NPL Liens Federal Superfund Liens
  - RAATS - RCRA Administrative Action Tracking System
  - TRIS - Toxic Chemical Release Inventory System
  - TSCA - Toxic Substances Control Act
  - FTTS FIFRA Tracking System - Federal Insecticide, Fungicide, & Rodenticide Act
- **State ASTM Standard**
  - Notify 65 Proposition 65 Records
  - Toxic Pits Toxic Pits Cleanup Act Sites
  - California Bond Expenditure Plan
- **State or Local ASTM Supplemental**
  - AST Aboveground Petroleum Storage Tank Facilities
  - DEED List of Deed Restrictions
  - LA Co. Site Mitigation Site Mitigation List
  - AOCONCERN San Gabriel Valley Areas of Concern
  - Vendor Proprietary Historical Databases

TABLE D-2
Federal Database Search Results for Known Sources

Facility Name	Map ID	Address	Federal Databases					
			CERCLIS	RCRIS LQG	RCRIS SQG	ERNS	FINDS	NPL
Bow Tie Cleaners	I 45	458 Foothill Boulevard	✓				✓	
Crystal Cleaners	I 46	446 Foothill Boulevard			✓		✓	
Flintridge Preparatory	D 20, D 21	4543 Crown Avenue					✓	
Foothill Volkswagen	I 49	475 Foothill Boulevard			✓		✓	
G.T. Equipment	22	4911 Crown Avenue			✓			
Independent Mercedes	H 41, H 42, H 61	440 Foothill Boulevard			✓		✓	
Lincoln Avenue Water Company	M 68, M 70, M 71	564 West Harriet Street					✓	
Name Not Reported	O 77, O 83	550 Foothill Boulevard				✓		
Name Not Reported	32	4463 Oak Grove Drive				✓		
JPL	A	4800 Oak Grove Drive	✓	✓			✓	✓
Pacific Bell	B 10, B11, B 12	4815 Oak Grove Avenue			✓		✓	
Palace Cleaners	L 65, L66, L67	510 ½ Foothill Boulevard	✓				✓	
RITE Cleaners	58	3053 N. Lincoln			✓		✓	
Saint Francis High School	C15, C16, C19	200 Foothill Boulevard					✓	

CERCLIS = Comprehensive Environmental Response, Compensation, and Liability Information System
RCRIS = Resource Conservation and Recovery Information System
LQG = Large Quantity Generator
SQG = Small Quantity Generator
ERNS = Emergency Response Notification System
FINDS = Facility Index System
NPL = National Priority List

TABLE D-3
State and Local Databases Search Results for Known Sources

Facility Name	Map ID	Address	State and Local Databases												
			CHMIRS	CORTESE	SWF/LF	WMUDS/SWAT	LUST	UST	HIST UST	CA FID	DRY CLEANERS	WDS	CA SLIC	HAZNET	LA COUNTY HMS
ARCO Products Company	O 76, O 78, O 79, O 80, O 81, O 82, O 84	550 Foothill Boulevard					✓✓	✓	✓					✓✓	✓✓
ARCO Products #80900	K 54, K55, K56	3081 North Lincoln Avenue													✓✓
Arnold B. Cotton	38	582 Meadow Grove Place													✓
Arroyo Substation	A	4800 Oak Grove Road												✓	
Bow Tie Cleaners	I 45	458 Foothill Boulevard									✓		✓	✓	✓
Clifford Beyers	72	636 Royce Street												✓	
Crystal Cleaners	I 46	446 Foothill Boulevard									✓			✓	
Five Acres/Boys & Girls AIDS School	G 35, G 36	760 West Mountain View Street												✓	
Flintridge Preparatory School	D 20, D 21	4543 Crown Avenue												✓	✓
Flintridge Riding Club	E 24, E 25, E 26, E 27	4625 Oak Grove Drive		✓			✓✓		✓	✓					✓
Foothill Volkswagen	I 49	475 Foothill Boulevard							✓	✓				✓	✓
Frank McHugh	39	665 West Altadena Drive												✓	
Georges Drive-in Liquor & Deli	K 60	3061 North Lincoln Avenue													✓
Goodyear Auto Service Center	37	420 Foothill Boulevard												✓	
Independent Mercedes	H 41, H 42, H 61	440 Foothill Boulevard												✓	✓
Knight Way School	59	405 West Knight Way													✓
La Canada Tire	I 44	459 Foothill Boulevard												✓	
La Canada High School	85	4463 Oak Grove Drive												✓	
La Canada Wastewater Plant	J 50, J 51	533 Meadow View Drive										✓			
Lincoln Avenue Water Company	M 68, M 70, M 71	564 West Harriet Street							✓					✓	
Loma Alta Company Park	57	3330 North Lincoln Avenue													
Los Angeles County Fire Camp 2	B 13	4815 Oak Grove Avenue								✓					
Los Angeles County Fire Station #82	31, 40	352 Foothill Boulevard							✓						✓
Los Angeles County Road Department	F 34	3900 Canyon Crest Road					✓								
Los Gringos Locos, LLC	I 48	464 West Foothill Boulevard													✓
Millard Canyon Dump	F 33	3900 Canyon Crest Road				✓									
Name Not Reported	O 77, O 83	550 Foothill Boulevard	✓	✓											

TABLE D-3 (Continued)
State and Local Databases Search Results for Known Sources

Facility Name	Map ID	Address	State and Local Databases												
			CHMIRS	CORTESE	SWF/LF	WMUDS/SWAT	LUST	UST	HIST UST	CA FID	DRY CLEANERS	WDS	CA SLIC	HAZNET	LA COUNTY HMS
Name Not Reported	32	4463 Oak Grove Drive	✓												
JPL	A	4800 Oak Grove Drive	✓✓	✓	✓		✓	✓	✓	✓		✓		✓	✓
Pacific Bell	B 10, B 11, B 12	4815 Oak Grove Avenue		✓			✓	✓	✓	✓					✓
Palace Cleaners	L 65, L 66, L 67	510 ½ foothill Boulevard									✓✓			✓	✓
Pasadena Children's Training School	23	2933 North El Nido												✓	
Pasadena Unified School District	30	725 West Altadena Drive												✓	
Ralphs Grocery Company #55	N 73, N 74	521 West Foothill Boulevard												✓	✓✓
Reclamation Plant District 28	J 50, J 51	533 Meadow View Drive													✓
RITE Cleaners	58	3053 North Lincoln									✓			✓	
Saint Francis High School	C 15, C 16, C 19	200 Foothill Boulevard												✓	✓
Saint Bede Church	O 17	215 Foothill Boulevard												✓	
South Coulter Water Treatment	M 69	564 West Harriet Street												✓	
Southern California Edison	A	4800 Oak Grove Drive												✓	
Szkiba Auto (Former)	K 52, K 53	3081 Lincoln Boulevard North		✓			✓							✓	✓
Truemark Property Management	L 64	502 West Foothill Boulevard													✓
Oak Grove Ranger Station	28	4600 Oak Grove Drive		✓			✓								
Oak Grove Work Center	O 18	Oak Grove Park							✓						
United States Department of Agriculture – Forest/Oak Grove Station	43	4550 Oak Grove Drive													✓
UNOCAL Corp Service Station	K 62	587 West Altadena Drive													✓
USDA Forest Service, Oak Grove	O 14	Oak Grove Drive North		✓			✓								
William Barber	75	511 Houseman Street												✓	
1X Donald L. Sheppard	47	400 Georgian												✓	

CHMIRS = California Hazardous Material Incident Report System
CORTESE = Cortese Hazardous Wastes and Substances
SWF/LF = Solid Waste Facilities/Landfill Facilities
WMUDS/SWAT = Waste Management Unit Database System/Solid Waste Assessment Test
LUST = Leaking Underground Storage Tank
UST = Underground Storage Tank
HIST UST = Historical Underground Storage Tank
CA FID = California Facility Inventory Database
WDS = Waste Discharge System
CA SLIC = California spills, leaks, investigations, and cleanup sites
HAZNET = Hazardous Waste Manifest
LA COUNTY HMS = Los Angeles County Hazardous Materials System

Appendix E
Millard Canyon Dump Closed Site Assessment Form

CLOSED SITE ASSESSMENT FORM

Site Name: MILLARD CANYON DUMP	**AKA:** LA Co Road Department	**SWIS #/CLASS:** 19-AA-5154, Inert

Current Address: (Include County)
3900 Canyon Crest Road, Alta Dena, LA County

Other Addresses: (Include County)
None

Location: (Include Site Location Quad Map)
Pg. 535, F3

Township, Range, Section and Parcel #:
Assesor's map 5863-6-901; TG 19E2

Operator(s):
LA County Road Dept.

Current Land Owner(s):	**Address:**	**Phone:**
Disposal Area: (acres) Unknown	**Depth of Fill:** Unknown	**Site Boundary: (acres)** Unknown
Type of Waste: Inert	**Type of Site:** Landfill	**Cover Information:** None
SWFP DATE: None	**Dates of Operation:** 1969-4/72	**Tonnage:** Unknown
WDR Date: None	**Date Site Closed:** 1972	**Closure Approved By:** Unknown

Maps, Boring Logs, Special Structural Drawings, and Other Technical Documents:
None

Land use on or within 1000 ft of waste boundary:

Land use on or within 1 mile of waste boundary:

Present Use(s):

Surface Condition:	**Landfill Gas Migration:**	**Leachate Migration:**

Other Observations:
Only the North side of Millard Canyon was used to fill with inert material; there was a request for a permit to use as dump in 1960, but was withdrawn in 1/30/62.

RECOMMENDATION:

D PRIORITY; SOLID FILL WAS DUMPED TO RESTORE AREA WASHED AWAY BY THE RAINSTORM.

Source of Information: LA County Public Works Department

Pictures:	**Taken By:** F. Marasa, REHS III
Date: 10/13/95, VSM	**Prepared By:** V. Maloles, REHS III

Appendix F
Perchlorate Breakthrough Curves

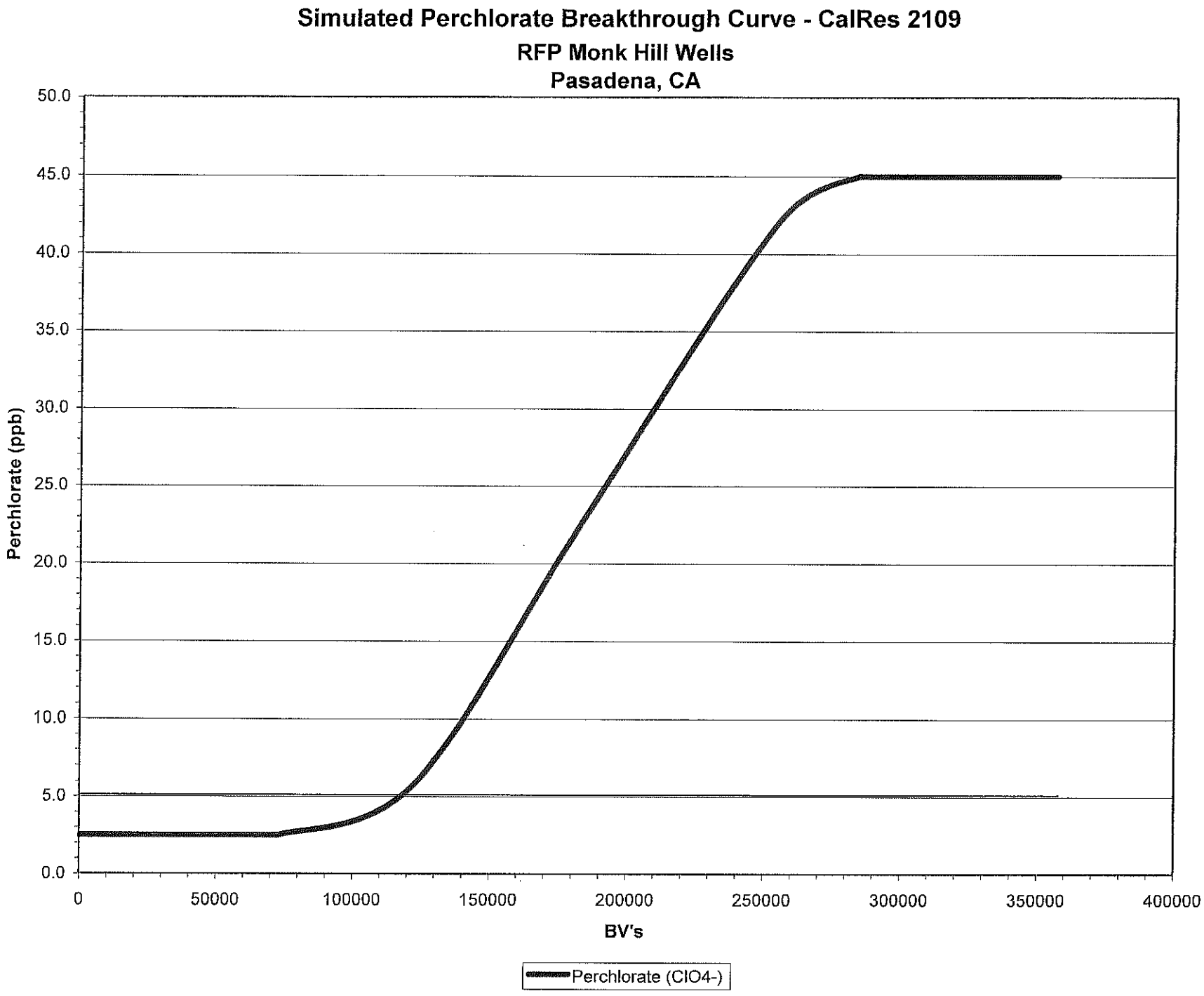
Simulated Perchlorate Breakthrough Curve - CalRes 2109
RFP Monk Hill Wells
Pasadena, CA
Perchlorate (ppb)
50.0
45.0
40.0
35.0
30.0
25.0
20.0
15.0
10.0
5.0
0.0
0
50000
100000
150000
200000
250000
300000
350000
400000
BV's
Perchlorate (ClO4-)

Figure 1: Simulated Breakthrough Curves - CalRes 2109
RFP Monk Hill Wells
Pasadena, CA

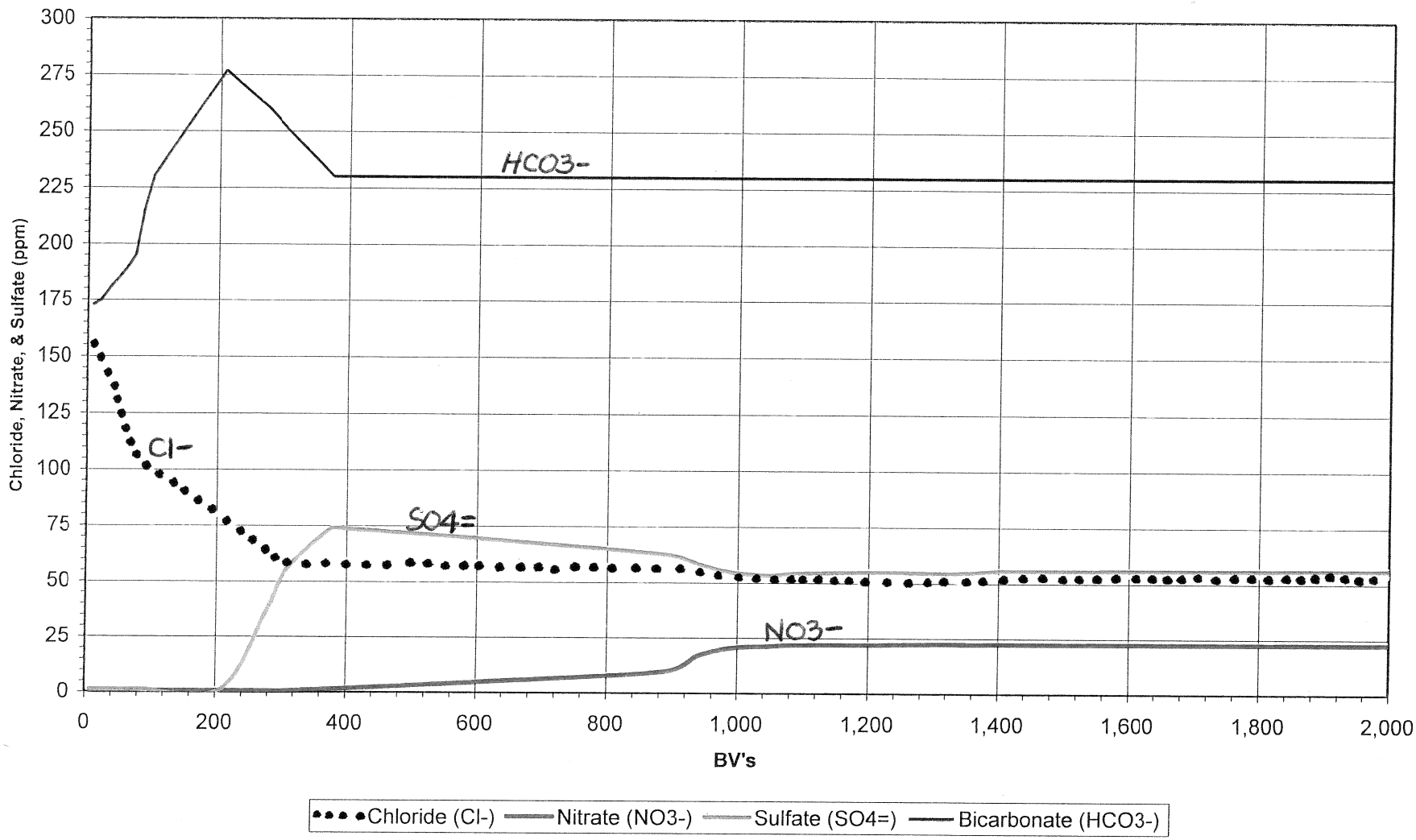

Appendix G

Specifications and Drawings for the Ion Exchange Vessels and Resin

SALES SPECIFICATION SHEET

CalRes™ 2109

Anion Exchange Resin

Resin Type:	Strong Base Anion
Structure:	Macroporous
Functional Group:	N-Tributyl Amine
Ionic Form:	Chloride

Test	Specification Min	Max	Calgon Carbon Test Method
Wet Volume Capacity, Cl Form, meq/mL	0.60		ASTM D 2187 Method M Mod.
Water Retention Capacity, Cl Form, %	50	65	ASTM D 2187 Method B Mod.
Bulk Density, g/L	0.68	0.72	CCC Internal Method
Particle Density, g/mL	1.05	1.15	CCC Internal Method
Whole Bead, %	90		CCC Internal Method
US Sieve Series, %			ASTM D 2187 Method D Mod.
+ 16		3	
- 50		5	

Manufacturing Point of Origin:	Product must be manufactured in the United States of America or EU.
Min. Required Approvals:	ANSI/NSF-61 by NSF, WQA, UL or other accredited laboratory California Department of Health Services Approval / Acceptance

This product is Made to Order.

Calgon Carbon Corporation's ion exchange products are continuously being improved and changes may have taken place since this publication went to press.

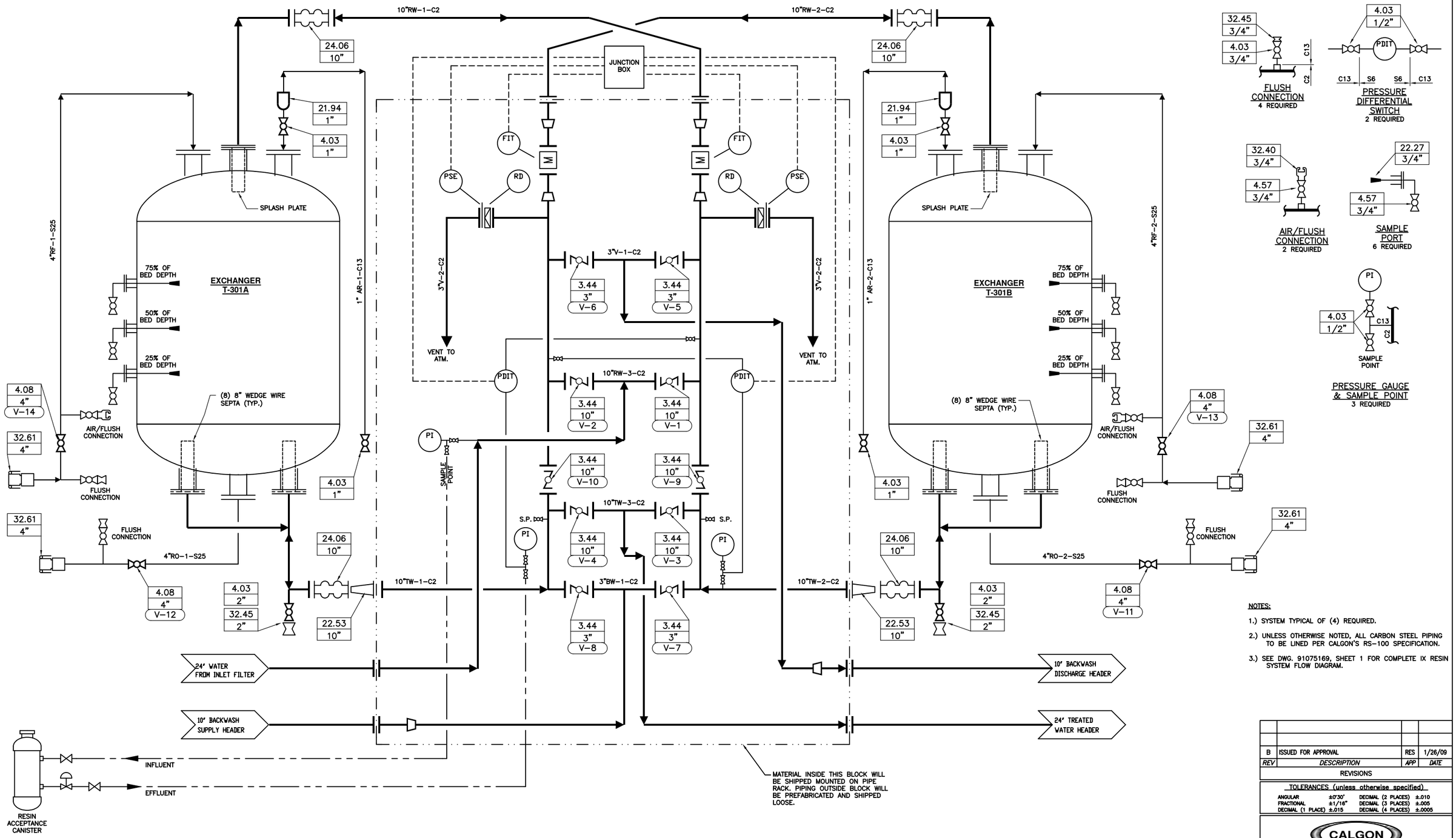

NOTES:

1.) SYSTEM TYPICAL OF (4) REQUIRED.

2.) UNLESS OTHERWISE NOTED, ALL CARBON STEEL PIPING TO BE LINED PER CALGON'S RS-100 SPECIFICATION.

3.) SEE DWG. 91075169, SHEET 1 FOR COMPLETE IX RESIN SYSTEM FLOW DIAGRAM.

MEDIA	INSTRUMENTATION	DESIGN CONDITIONS	LEGEND	ADSORBERS	
MEDIA: CALRES 2109 QUANTITY: 353 CU. FT. PER VESSEL SERVICE: POTABLE	• PI 217 • RD – PSE 577 FOR 125 psig MAX. OPER. PRES. • PSE – BS&B KBA • PDIT – ROSEMOUNT 1151	FLOW RATE – 1750 GPM INFLUENT PRESSURE – 100 PSIG INFLUENT TEMP. – 60° F MAX. BACKFLUSH RATE – 150 GPM MAX.	AR – AIR RELEASE BW – BACKWASH WATER FC – FLUSH CONNECTION RF – RESIN FILL RW – RAW WATER RO – RESIN OUT SP – SAMPLE POINT TW – TREATED WATER V – VENT	12'–0" O.D. x 5'–0" STRAIGHT SIDE ASME 2:1 ELLIPTICAL TOP AND BOTTOM HEADS. CARBON STEEL CONSTRUCTION. ASME SECT. VIII, DIV. 1 W/ PLASITE 4006 LINING FORCE CURED PER NSF 61 CRITERIA 125 PSIG @ 140°F DESIGN.	AIR, CARBON TRANSFER – 100 SCFM @ 30 PSIG MIN. PLANT WATER – 100 GPM @ 30 PSIG MIN. WIRING – MIN. AWG #16 TO PDS 294

THIS DRAWING AND DESIGN IS THE PROPERTY OF CALGON CARBON CORPORATION AND IS NOT TO BE REPRODUCED IN WHOLE OR IN PART NOR EMPLOYED FOR ANY PURPOSE OTHER THAN SPECIFICALLY PERMITTED IN WRITING BY CALGON CARBON CORPORATION. THIS DRAWING LOANED SUBJECT TO RETURN ON DEMAND.

	NAME	DATE
DRAFTER	JGP	07–25–2008
DESIGNER		
CHECKER		
APPROVAL		
PROJECT No.	IX–08089.MHLL	

REV	DESCRIPTION	APP	DATE
B	ISSUED FOR APPROVAL	RES	1/26/09

REVISIONS

TOLERANCES (unless otherwise specified)

ANGULAR	±0°30'	DECIMAL (2 PLACES)	±.010
FRACTIONAL	±1/16"	DECIMAL (3 PLACES)	±.005
DECIMAL (1 PLACE)	±.015	DECIMAL (4 PLACES)	±.0005

CALGON

CALGON CARBON CORPORATION

CLIENT: MONK HILLS WELLS PASADENA, CA

TITLE: PERCHLORATE REMOVAL ION EXCHANGE RESIN SYSTEM FLOW DIAGRAM

DWG. Size: D | SHEET No.: 1 OF 1 | SCALE: NONE

DWG. No.: 91075170 | REV.: B

V:\2008\IX-08089.MHLL\Drawings\Process\91075170 IX System Flow Diagram.dwg Jan 28, 2009 - 2:00pm

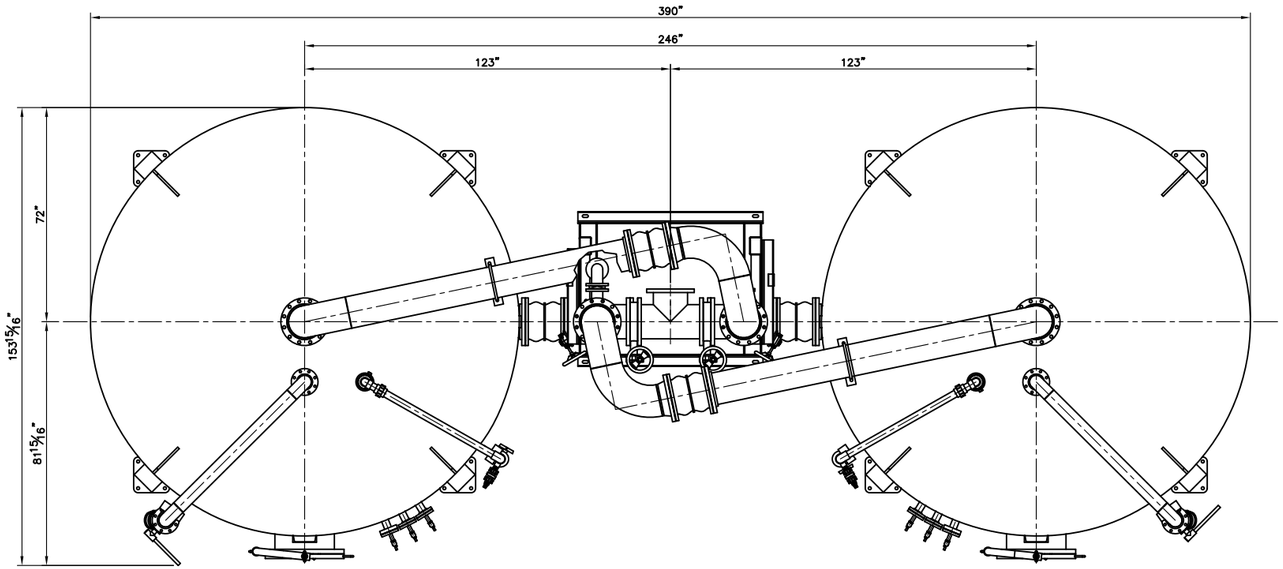

PLAN

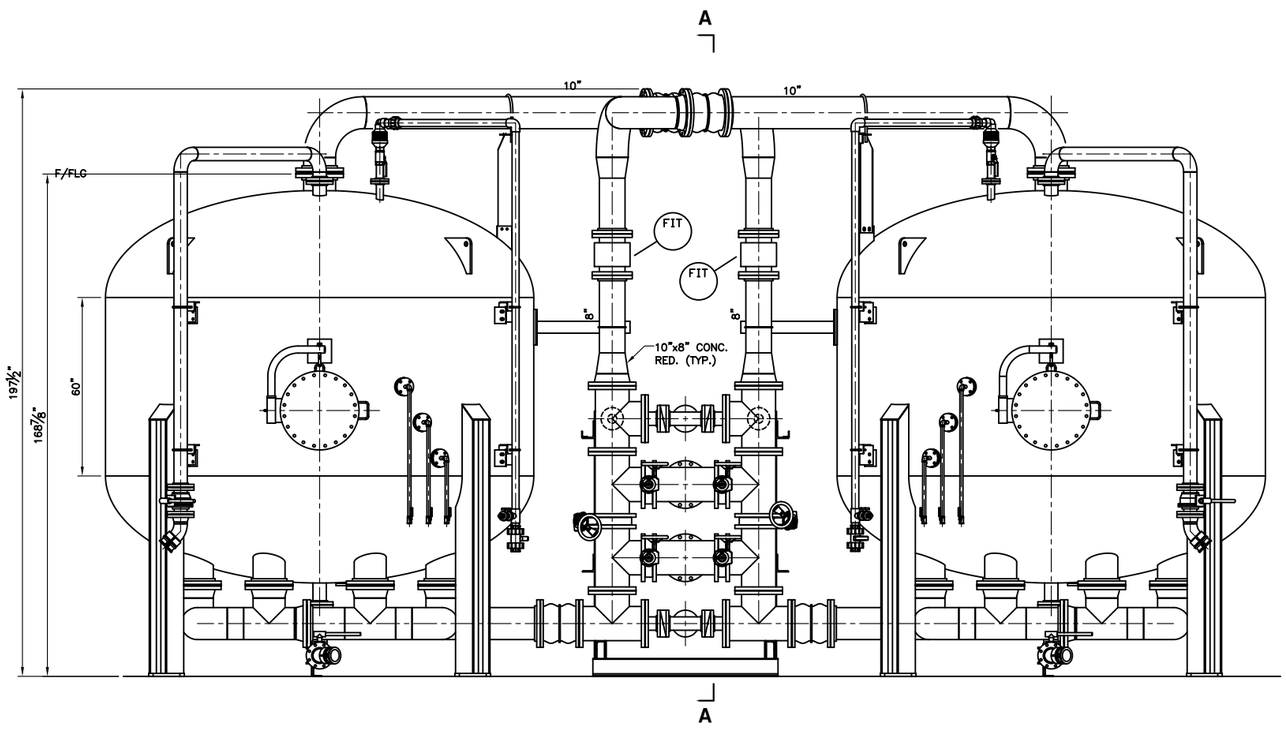

ELEVATION

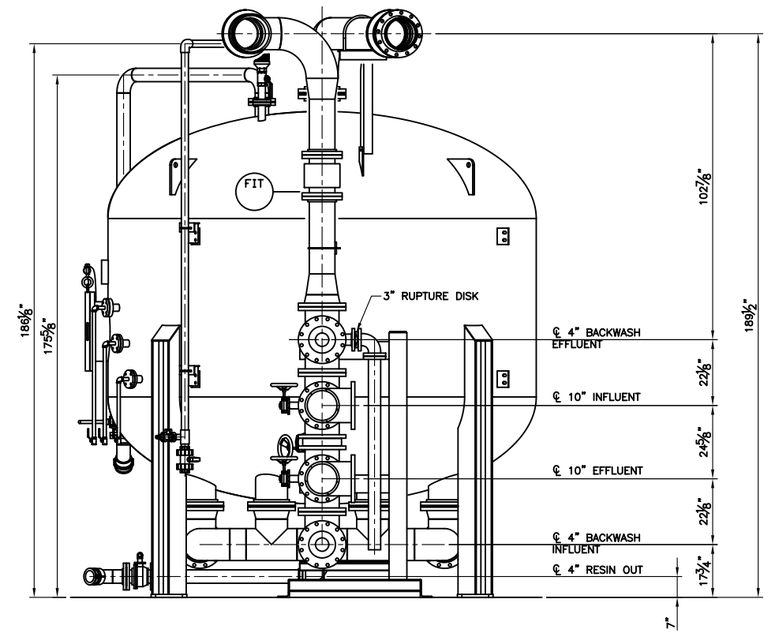

SECTION A-A

NOTES:
1. SYSTEM SHOWN IS TYPICAL OF (4) SYSTEMS TO BE SUPPLIED.
2. PAINT TO BE PER CCC SPECIFICATION RS-17 WITH POLYURETHANE TOP COAT.

REV	DESCRIPTION	APP	DATE
B	ISSUED FOR APPROVAL	RES	1/26/09

REVISIONS

TOLERANCES (unless otherwise specified)

ANGULAR	±0°30'	DECIMAL (2 PLACES)	±.010
FRACTIONAL	±1/16"	DECIMAL (3 PLACES)	±.005
DECIMAL (1 PLACE)	±.015	DECIMAL (4 PLACES)	±.0005

THIS DRAWING AND DESIGN IS THE PROPERTY OF CALGON CARBON CORPORATION AND IS NOT TO BE REPRODUCED IN WHOLE OR IN PART NOR EMPLOYED FOR ANY PURPOSE OTHER THAN SPECIFICALLY PERMITTED IN WRITING BY CALGON CARBON CORPORATION. THIS DRAWING LOANED SUBJECT TO RETURN ON DEMAND.

	NAME	DATE
DRAFTER	RES	9/25/06
DESIGNER		
CHECKER		
APPROVAL		
PROJECT No.	IX-08089.MHLL	

CALGON

CALGON CARBON CORPORATION

CLIENT: MONK HILLS WELS
PASADENA, CA

TITLE: IX RESIN SERVICE
MODEL 12
GENERAL ARRANGEMENT

DWG. Size	SHEET No.	SCALE
D	1 OF 2	NONE

DWG. No. 91075163 REV. B

V:\2008\IX-08089.MHLL\Drawings\General Arrangements\91075163 - GA IX.dwg Jan 28, 2009 - 1:04pm

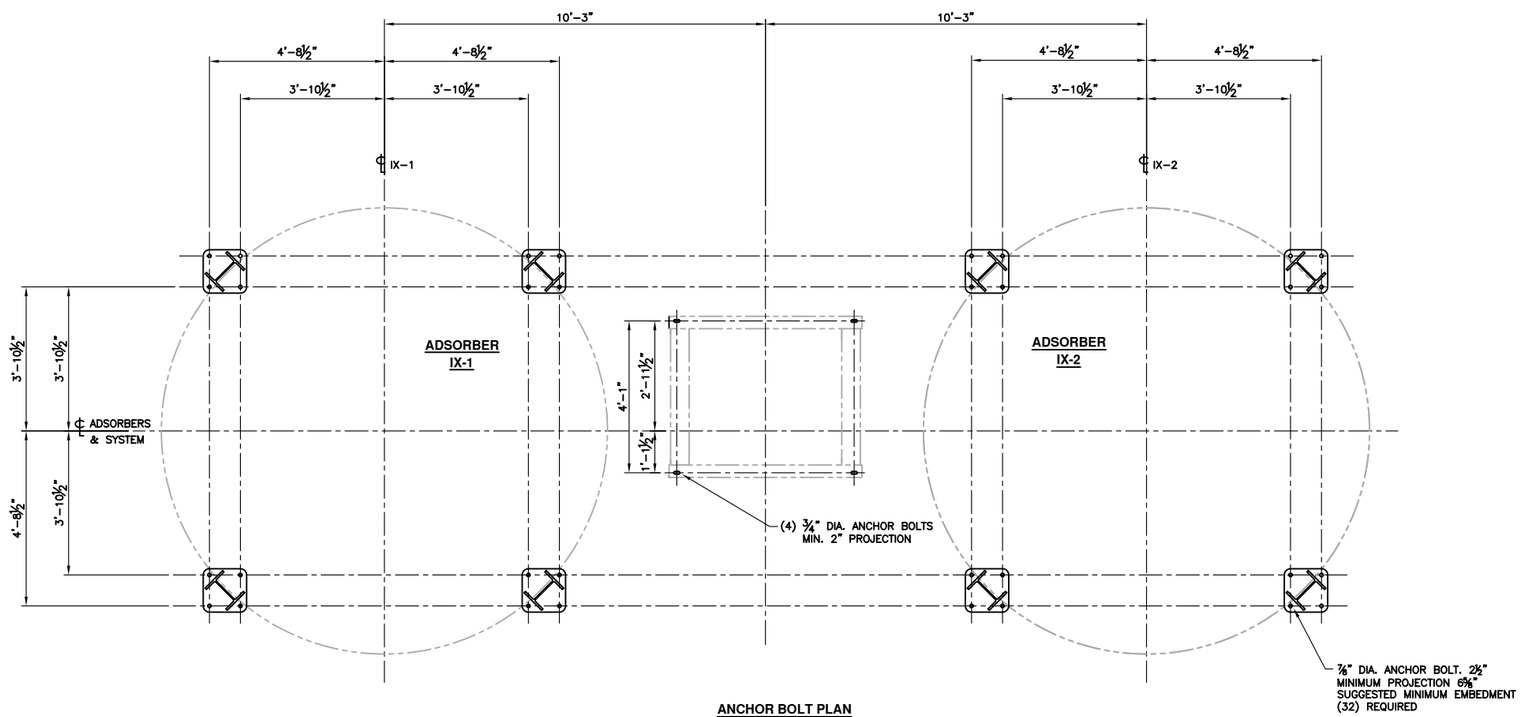

ANCHOR BOLT PLAN

ANCHOR PATTERN SHOWN IS FOR ATTACHMENT OF VESSEL BASEPLATES TO A CONCRETE SLAB IN SIESMIC ZONE 4. TWO LARGE CENTER HOLES ARE PROVIDED IN EACH BASEPLATE FOR ATTACHEMENT TO STEEL FRAMING.

REV	DESCRIPTION	APP	DATE
B	ISSUED FOR APPROVAL	RES	1/26/09

REVISIONS

TOLERANCES (unless otherwise specified)

ANGULAR	±0°30'	DECIMAL (2 PLACES)	±.010
FRACTIONAL	±1/16"	DECIMAL (3 PLACES)	±.005
DECIMAL (1 PLACE)	±.015	DECIMAL (4 PLACES)	±.0005

THIS DRAWING AND DESIGN IS THE PROPERTY OF CALGON CARBON CORPORATION AND IS NOT TO BE REPRODUCED IN WHOLE OR IN PART NOR EMPLOYED FOR ANY PURPOSE OTHER THAN SPECIFICALLY PERMITTED IN WRITING BY CALGON CARBON CORPORATION. THIS DRAWING LOANED SUBJECT TO RETURN ON DEMAND.

	NAME	DATE
DRAFTER	RES	9/25/06
DESIGNER		
CHECKER		
APPROVAL		
PROJECT No.	IX-08089.MHLL	

CALGON

CALGON CARBON CORPORATION

CLIENT: MONK HILLS WELS
PASADENA, CA

TITLE: IX RESIN SERVICE
MODEL 12
GENERAL ARRANGEMENT

DWG. Size	SHEET No.	SCALE
D	2 OF 2	NONE

DWG. No. 91075163 REV. B

V:\2008\IX-08089.MHLL\Drawings\General Arrangements\91075163 - GA IX.dwg Jan 28, 2009 - 1:04pm

Appendix H

GAC Specifications

FILTRASORB® 300
Granular Activated Carbon for Municipal Specifications

CALGON
CALGON CARBON CORPORATION

Description

FILTRASORB® 300 is a granular activated carbon developed by Calgon Carbon Corporation for the removal of taste and odor compounds, disinfection by-product precursors, and other dissolved organic compounds from potable water.

This activated carbon is made from selected grades of bituminous coal to produce a high activity, durable granular product capable of withstanding the abrasion associated with repeated backwashing, air scouring, and hydraulic transport. Activation is carefully controlled to produce an equal blend of both low energy pores as measured by iodine number and high energy pores as measured by trace capacity number for effective adsorption of a broad range of high and low molecular weight organic contaminants. The higher density of this activated carbon results in a greater adsorptive capacity per filter volume as measured by the volume iodine number. The product is also formulated to comply with all the applicable provisions of the AWWA Standard for Granular Activated Carbon, edition B604-05, the stringent extractable metals requirements of ANSI/NSF Standard 61, and the Food Chemicals Codex.

Specifications	Value
Iodine Number.	900 mg/g (min)
Moisture by weight	2% (max)
Effective size	0.8 - 1.0 mm
Uniformity Coefficient	2.1 (max)
Abrasion No.	78 (min)
Trace Capacity Number	10 mg/cc (min)
Screen Size by weight, US Sieve Series	
On 8 mesh	15% (max)
Through 30 mesh	4% (max)

Typical Property	Value
Apparent Density	0.56 g/cc
Ash by weight	7%

Features	Benefits
Bituminous-based raw material	Provides higher hardness relative to other raw materials reducing the generation of fines and product losses during backwashing.
Coal is pulverized and reagglomerated with suitable binder	Pore structure provides an equal blend of low and high energy pores for effective removal of a broad range of high and low molecular weight organic compounds. Has a high density, resulting in a greater adsorption capacity per filter volume, wets readily, and does not float, thus minimizing loss during backwash operations. Creates optimal transport paths for faster adsorption.

Bed Expansion

Based on backwashed and segregated bed

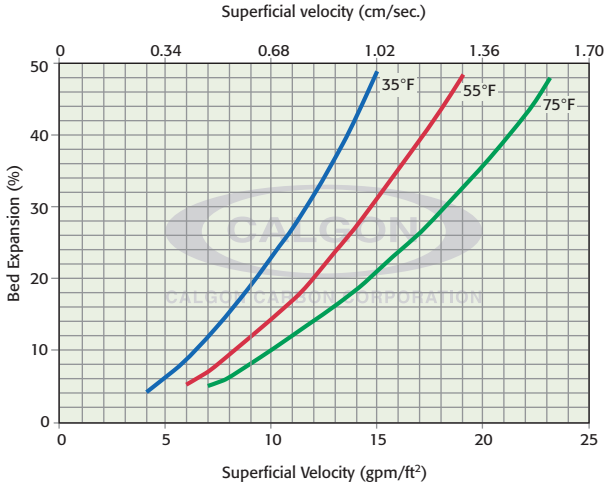

Pressure Drop

Based on backwashed and segregated bed

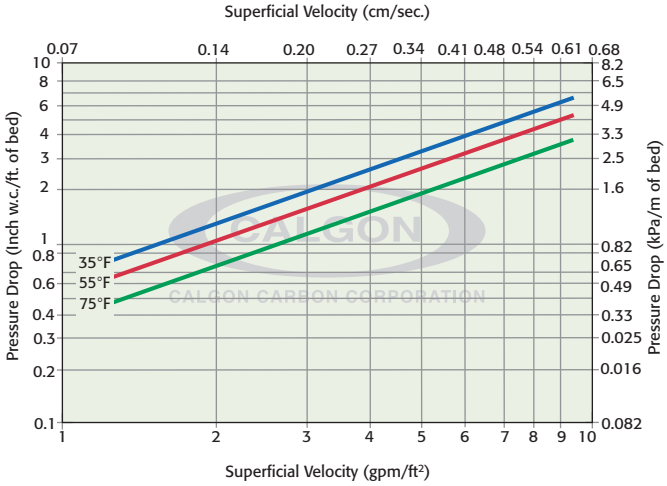

FILTRASORB® 300
Granular Activated Carbon for Municipal Specifications

CALGON
CALGON CARBON CORPORATION

Applications

FILTRASORB® 300 activated carbon can be used to treat surface and groundwater sources for the production of drinking water. This product can be used as a complete replacement for sand and anthracite media. FILTRASORB® 300 activated carbon functions as a dual purpose media, providing both filtration and adsorption. FILTRASORB® has been used successfully in drinking water applications for over 40 years.

Design Considerations

As a replacement for existing filter media, conversion to FILTRASORB® 300 granular activated carbon imposes no major changes to a plant's normal filtration operations. Calgon Carbon Corporation can also provide complete modular adsorption systems as an add-on treatment stage if required.

Safety Message

Wet activated carbon preferentially removes oxygen from air. In closed or partially closed containers and vessels, oxygen depletion may reach hazardous levels. If workers are to enter a vessel containing carbon, appropriate sampling and work procedures for potentially low oxygen spaces should be followed, including all applicable Federal and State requirements.

CALGON
CALGON CARBON CORPORATION

Making Water and Air Safer and Cleaner

Calgon Carbon Corporation
P.O. Box 717
Pittsburgh, PA USA 15230-0717
1-800-422-7266
Tel: 1-412-787-6700
Fx: 1-412-787-6713

Chemviron Carbon
European Operations of
Calgon Carbon Corporation
Zoning Industriel C de Feluy
B-7181 Feluy, Belgium
Tel: + 32 (0) 64 51 18 11
Fx: + 32 (0) 64 54 15 91

Calgon Carbon Asia PTE LTD
9 Temasek Boulevard
#08-01A Suntec Tower Two
Singapore 038989
Tel: + 65 6 221 3500
Fx: + 65 6 221 3554

Your local representative

Copyright© 2008 Calgon Carbon Corporation, all rights reserved.

Appendix I

Specifications and Drawings for the GAC Vessels

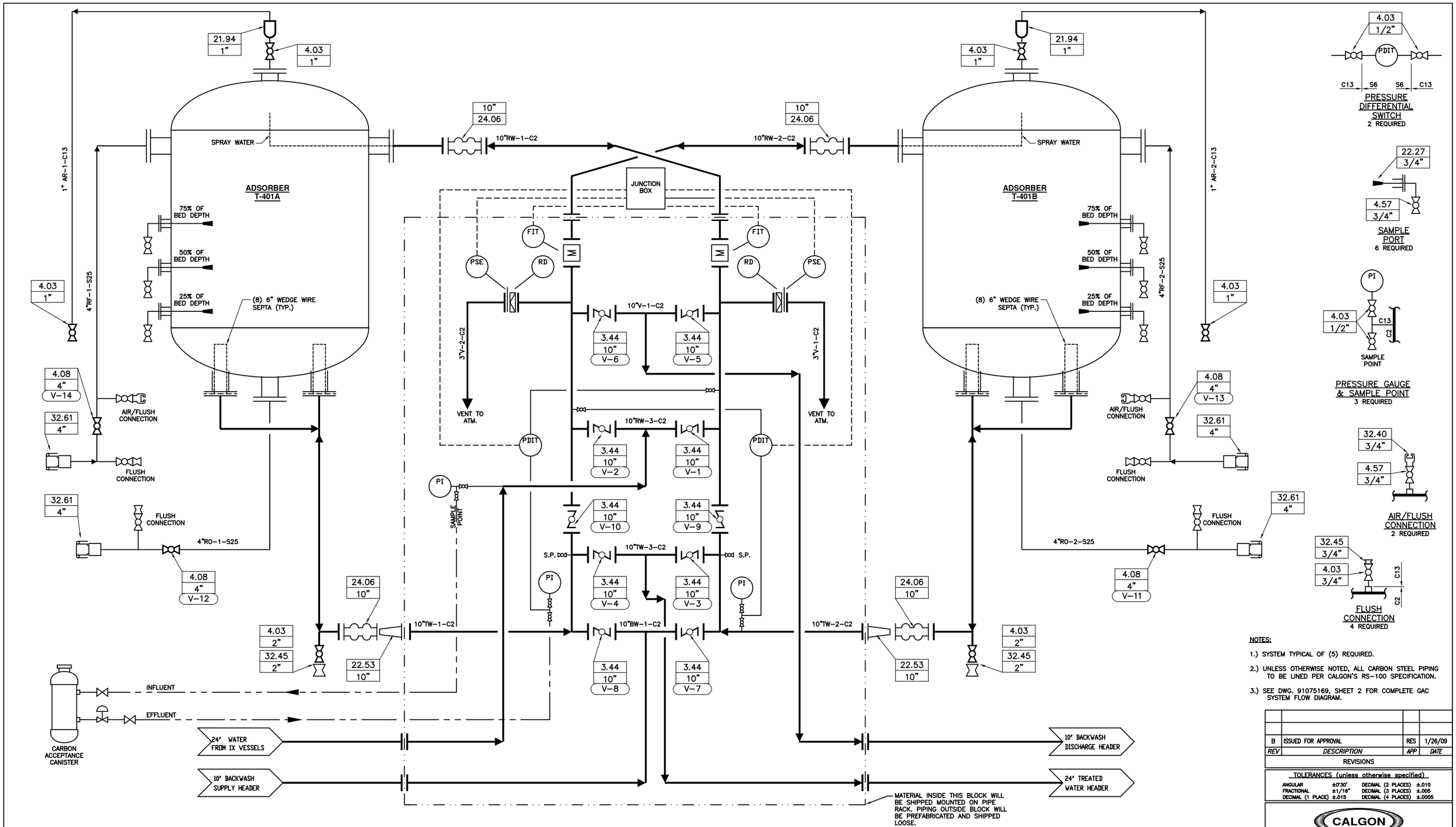

NOTES:

1.) SYSTEM TYPICAL OF (5) REQUIRED.

2.) UNLESS OTHERWISE NOTED, ALL CARBON STEEL PIPING TO BE LINED PER CALGON'S RS-100 SPECIFICATION.

3.) SEE DWG. 91075169, SHEET 2 FOR COMPLETE GAC SYSTEM FLOW DIAGRAM.

REV	DESCRIPTION	APP	DATE
B	ISSUED FOR APPROVAL	RES	1/26/09

REVISIONS

TOLERANCES (unless otherwise specified)

ANGULAR	±0°30'	DECIMAL (2 PLACES)	±.010
FRACTIONAL	±1/16"	DECIMAL (3 PLACES)	±.005
DECIMAL (1 PLACE)	±.015	DECIMAL (4 PLACES)	±.0005

MEDIA	INSTRUMENTATION	DESIGN CONDITIONS	LEGEND	ADSORBERS	
MEDIA: F-300 QUANTITY: 40,000 LB.S/1,335 CU. FT. PER VESSEL SERVICE: POTABLE	• PI 217 • RD – PSE 577 FOR 125 psig MAX. OPER. PRESS. • PSE – BS&B KBA • PDIT – ROSEMOUNT 1151	FLOW RATE – 1400 GPM INFLUENT PRESSURE – PSIG INFLUENT TEMP. – 60° F MAX. BACKFLUSH RATE – 1700 GPM MAX.	AR – AIR RELEASE BW – BACKWASH WATER FC – FLUSH CONNECTION RF – RESIN FILL RW – RAW WATER RO – RESIN OUT SP – SAMPLE POINT TW – TREATED WATER V – VENT	12'-0" O.D. x 14'-0" STRAIGHT SIDE ASME 2:1 ELLIPTICAL TOP AND BOTTOM HEADS. CARBON STEEL CONSTRUCTION. ASME SECT. VIII, DIV. 1 W/ PLASITE 4006 LINING FORCED CURED PER NSF 61 CRITERIA 125 PSIG @ 140°F DESIGN.	AIR, CARBON TRANSFER – 100 SCFM @ 30 PSIG MIN. PLANT WATER – 100 GPM @ 30 PSIG MIN. WIRING – MIN. AWG #16 TO PDS 294

THIS DRAWING AND DESIGN IS THE PROPERTY OF CALGON CARBON CORPORATION AND IS NOT TO BE REPRODUCED IN WHOLE OR IN PART NOR EMPLOYED FOR ANY PURPOSE OTHER THAN SPECIFICALLY PERMITTED IN WRITING BY CALGON CARBON CORPORATION. THIS DRAWING LOANED SUBJECT TO RETURN ON DEMAND.

	NAME	DATE
DRAFTER	JGP	07-25-2008
DESIGNER		
CHECKER		
APPROVAL		
PROJECT No.	IX-08089.MHLL	

CALGON

CALGON CARBON CORPORATION

CLIENT: MONK HILLS WELLS PASADENA, CA

TITLE: V.O.C. REMOVAL GRANULAR ACTIVATED CARBON SYSTEM FLOW DIAGRAM

DWG. Size: D | SHEET No.: 1 OF 1 | SCALE: NONE

DWG. No.: 91075171 | REV.: B

V:\2008\IX-08089.MHLL\Drawings\Process\91075171 GAC System Flow Diagram.dwg Jan 28, 2009 - 2:02pm

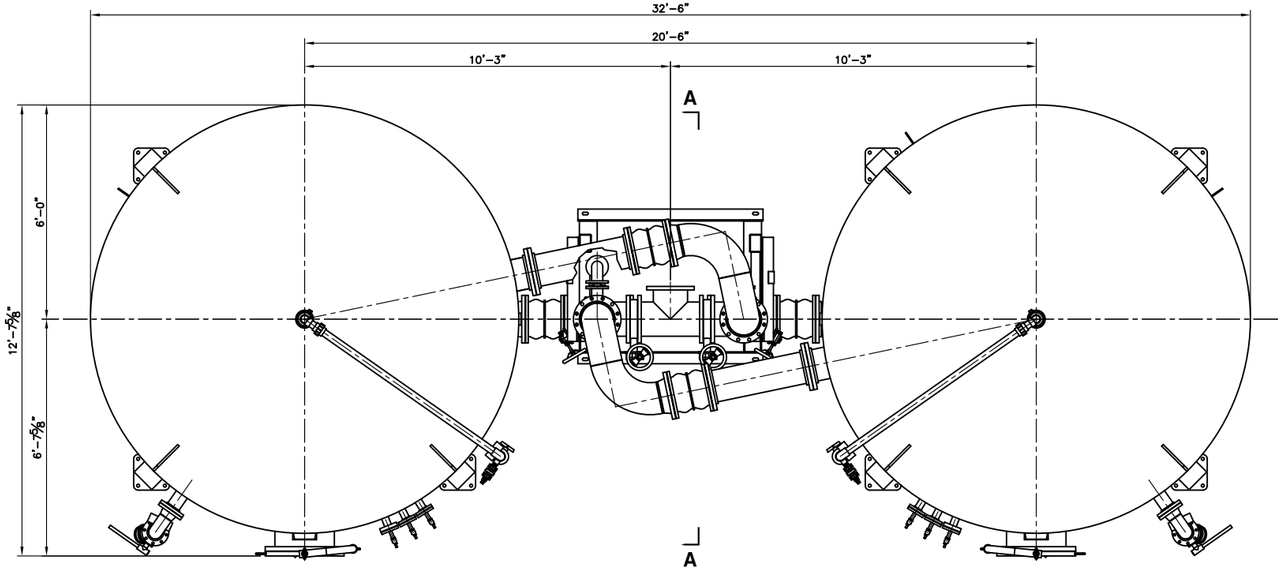

PLAN

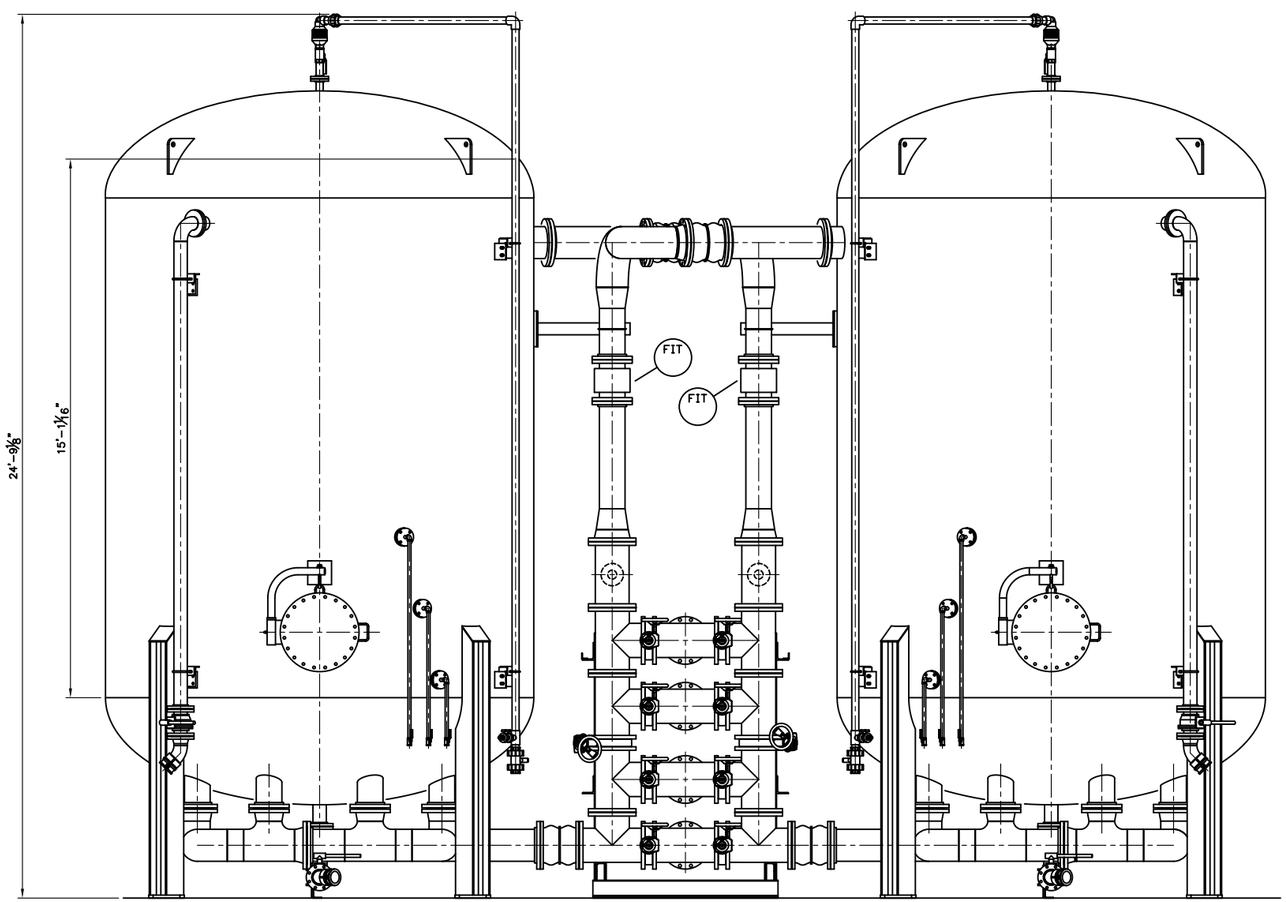

ELEVATION

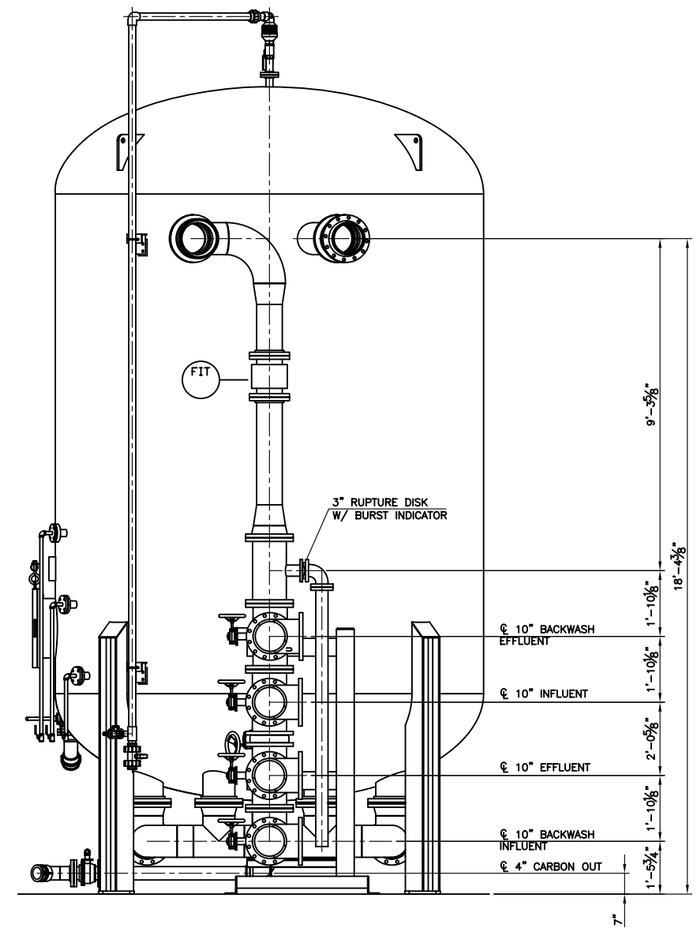

SECTION A-A

NOTES:
1. SYSTEM SHOWN IS TYPICAL OF (5) SYSTEMS TO BE SUPPLIED.
2. PAINT TO BE PER CCC SPECIFICATION RS-17 WITH POLYURETHANE TOP COAT.

REV	DESCRIPTION	APP	DATE

REVISIONS

TOLERANCES (unless otherwise specified)

ANGULAR	±0°30'	DECIMAL (2 PLACES)	±.010
FRACTIONAL	±1/16"	DECIMAL (3 PLACES)	±.005
DECIMAL (1 PLACE)	±.015	DECIMAL (4 PLACES)	±.0005

THIS DRAWING AND DESIGN IS THE PROPERTY OF CALGON CARBON CORPORATION AND IS NOT TO BE REPRODUCED IN WHOLE OR IN PART NOR EMPLOYED FOR ANY PURPOSE OTHER THAN SPECIFICALLY PERMITTED IN WRITING BY CALGON CARBON CORPORATION. THIS DRAWING LOANED SUBJECT TO RETURN ON DEMAND.

	NAME	DATE
DRAFTER	RES	9/25/06
DESIGNER		
CHECKER		
APPROVAL		
PROJECT No.	IX-08089.MHLL	

CALGON

CALGON CARBON CORPORATION

CLIENT: MONK HILLS WELS
PASADENA, CA

TITLE: GAC SERVICE
MODEL 12
GENERAL ARRANGEMENT

DWG. Size	SHEET No.	SCALE
D	1 OF 2	NONE

DWG. No. 91074164 REV. A

V:\2008\IX-08089.MHLL\Drawings\General Arrangements\91075164 - GA GAC.dwg Jan 28, 2009 - 1:03pm

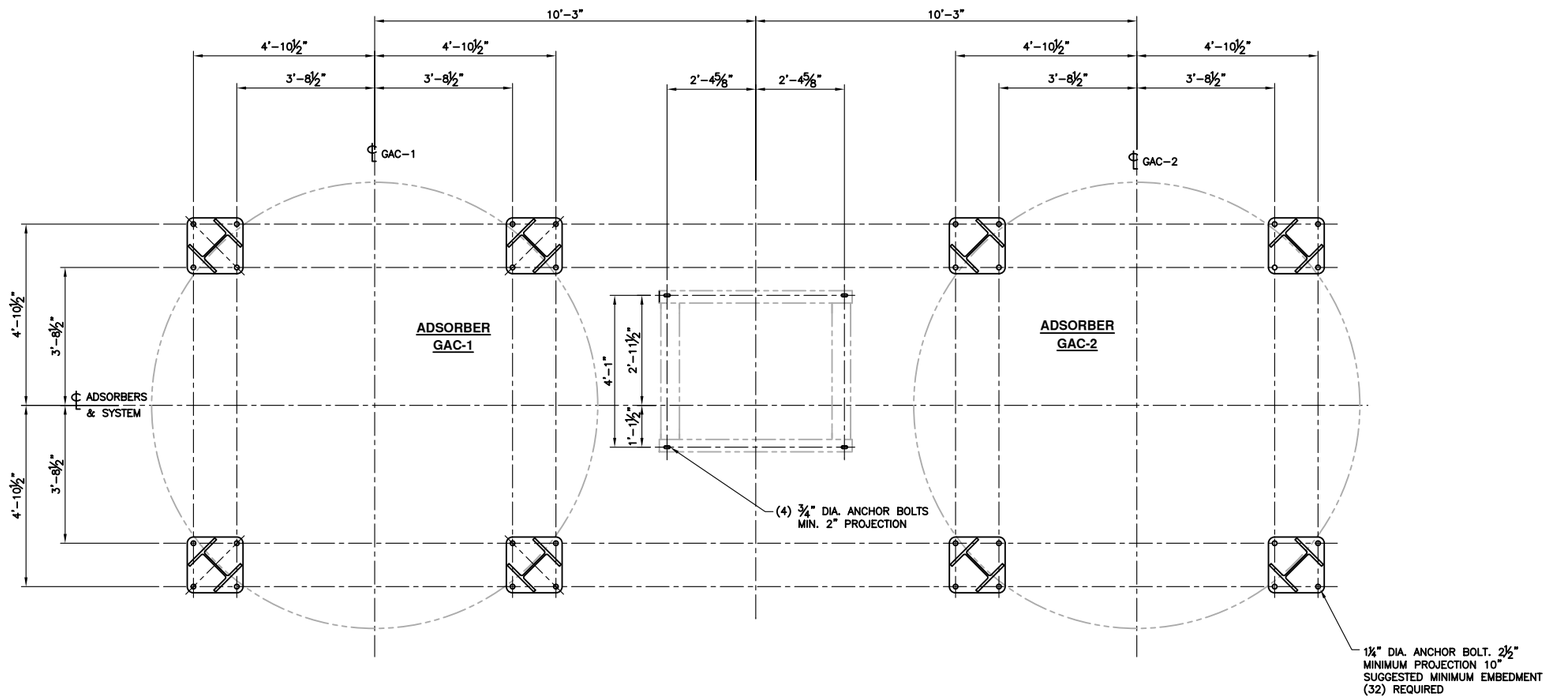

ANCHOR BOLT PLAN

ANCHOR PATTERN SHOWN IS FOR ATTACHMENT OF VESSEL BASEPLATES TO A CONCRETE SLAB IN SIESMIC ZONE 4. TWO LARGE CENTER HOLES ARE PROVIDED IN EACH BASEPLATE FOR ATTACHEMENT TO STEEL FRAMING.

REV	DESCRIPTION	APP	DATE

REVISIONS

TOLERANCES (unless otherwise specified)

ANGULAR	±0°30'	DECIMAL (2 PLACES)	±.010
FRACTIONAL	±1/16"	DECIMAL (3 PLACES)	±.005
DECIMAL (1 PLACE)	±.015	DECIMAL (4 PLACES)	±.0005

CALGON

CALGON CARBON CORPORATION

THIS DRAWING AND DESIGN IS THE PROPERTY OF CALGON CARBON CORPORATION AND IS NOT TO BE REPRODUCED IN WHOLE OR IN PART NOR EMPLOYED FOR ANY PURPOSE OTHER THAN SPECIFICALLY PERMITTED IN WRITING BY CALGON CARBON CORPORATION. THIS DRAWING LOANED SUBJECT TO RETURN ON DEMAND.

	NAME	DATE
DRAFTER	RES	9/25/06
DESIGNER		
CHECKER		
APPROVAL		
PROJECT No.	IX-08089.MHLL	

CLIENT: MONK HILLS WELS
PASADENA, CA

TITLE: GAC SERVICE
MODEL 12
GENERAL ARRANGEMENT

DWG. Size	SHEET No.	SCALE
D	2 OF 2	NONE

DWG. No. 91075164 REV. A

V:\2008\IX-08089.MHLL\Drawings\General Arrangements\91075164 - GA GAC.dwg Jan 28, 2009 - 1:03pm

Appendix J
The Draft O&M Plan for the MHTS

CALGON CARBON CORPORATION

PRELIMINARY OPERATION AND MAINTENANCE MANUAL

MODEL 12
GAC & ION EXCHANGE SYSTEMS

FOR

MONK HILL WELLS
PASADENA, CA

PREPARED BY
CALGON CARBON CORPORATION
PITTSBURGH, PA

CALGON CARBON PROJECT NUMBER: **IX-08089.MHLL**
SERVICES CONTRACT NUMBER: **19,780**

DATE OF PRINT: MARCH, 2009

THIS MANUAL IS THE PROPERTY OF CALGON CARBON CORPORATION AND IS NOT TO BE REPRODUCED IN WHOLE OR IN PART, NOR EMPLOYED FOR ANY PURPOSE OTHER THAN SPECIFICALLY PERMITTED IN WRITING BY CALGON CARBON CORPORATION.

TABLE OF CONTENTS

SECTION 1 -- SYSTEM DESCRIPTION

1.1 General System Description 1.1
1.2 Perchlorate (ClO_4) Removal System 1.1
1.3 Volatile Organic Contaminates (VOC) Removal System 1.2
1.4 Design Basis ..... Later

SECTION 2 -- INSTALLATION

2.1 Foundations 2.1
2.2 Equipment Installation 2.1
2.3 General Handling and Lifting Instructions 2.3
2.4 Recommended Unloading and Placement Procedures 2.3

SECTION 3 – ION EXCHANGE OPERATION

3.1 Pre-Operation Check-Out 3.1
3.2 IX Vessel Disinfection 3.1
3.3 Filling an Exchanger With Resin 3.1
3.4 Backwashing and Backflushing 3.2
3.4.1 Backwash/Backflush -- General 3.2
3.4.2 Backwashing an Exchanger 3.3
3.4.3 Starting System after Backwashing 3.3
3.5 Start-Up in Series Flow 3.4
3.6 Steady State Operation 3.5
3.6.1 Monitoring 3.5
3.6.2 Valve Operation 3.5
3.6.3 Exchanger Sequencing -- PV1 Lead, PV2 Lag 3.6
3.6.4 Exchanger Sequencing -- Taking Adsorber PV1 Off-Line 3.7
3.6.5 Exchanger Sequencing -- PV1 Back On-Line As the Lag Vessel 3.7
3.6.6 Exchanger Sequencing -- Taking Adsorber PV2 Off-Line 3.7
3.6.7 Exchanger Sequencing -- PV2 Back On-Line As the Lag Vessel 3.8
3.7 Shutdown 3.8
3.7.1 Short Term Shutdown 3.8
3.7.2 Extended Shutdowns 3.8
3.8 Operational Scenarios 3.9
3.9 Troubleshooting Guide 3.9

CALGON CARBON CORPORATION ♦ COPYRIGHT 2009 ♦ ALL RIGHTS RESERVED

SECTION 4 -- RESIN TRANSFER PROCEDURE

4.0 Resin Transfer Procedure - Standard Trailer 4.1
4.1 Site Requirements 4.1
4.2 Spent Resin Transfer to DOT Supersacks 4.1
4.2.1 Spent Resin Transfer 4.1
4.3 Fresh Resin Transfer From Trailer 4.3
4.3.1 Transfer Resin to Exchanger 4.3

SECTION 5 -- GAC OPERATION

5.1 Pre-Operation Check-Out 5.1
5.2 Filling An Adsorber With Carbon 5.1
5.3 Wetting (Deaerating The Carbon) 5.2
5.4 Backwashing and Backflushing 5.3
5.4.1 Backwash/Backflush -- General 5.3
5.4.2 Backwashing An Adsorber 5.4
5.4.3 Re-Starting System After Backwashing 5.5
5.5 Start-Up 5.5
5.5.1 Series Flow 5.5
5.5.2 Parallel Flow 5.6
5.6 Steady State Operation 5.8
5.6.1 Monitoring 5.8
5.6.2 Valve Operation 5.8
5.6.3 Adsorber Sequencing -- PV1 Lead, PV2 Lag 5.9
5.6.4 Adsorber Sequencing -- Taking Adsorber PV1 Off-Line 5.9
5.6.5 Adsorber Sequencing -- PV1 Back On-Line As The Lag Vessel 5.10
5.6.6 Adsorber Sequencing -- Taking Adsorber PV2 Off-Line 5.10
5.6.7 Adsorber Sequencing -- PV2 Back On-Line As The Lag Vessel 5.10
5.6.8 Adsorber Sequencing -- Parallel Operation 5.11
5.7 Shutdown 5.11
5.7.1 Short Term Shutdown 5.11
5.7.2 Extended Shutdowns 5.11
5.8 Troubleshooting Guide 5.12

CALGON CARBON CORPORATION ♦ COPYRIGHT 2009 ♦ ALL RIGHTS RESERVED

SECTION 6 -- GAC TRANSFER PROCEDURE

6.0 Standard Trailer 6.1
6.1 Site Requirements 6.1
6.2 Spent Carbon Transfer to Trailer 6.2
6.2.1 Spent Carbon Transfer 6.2
6.2.2 Drain Water From Trailer 6.3
6.3 Fresh Carbon Transfer From Trailer 6.4
6.3.1 Fill The Trailer With Water 6.4
6.3.2 Transfer Carbon To Adsorber 6.5

SECTION 7 -- CARBON GENERAL INFORMATION

7.1 Maintenance 7.1
7.2 Safety Considerations 7.2
7.2.1 Oxygen Demand Due To Activated Carbon 7.2
7.2.2 Emergency Procedures 7.3
7.2.3 Pressure Relief Warning 7.3
7.3 Record Keeping 7.3

SECTION 8 -- ACTIVATED CARBON / ADSORPTION INFORMATION

8.1 Adsorption 8.1
8.2 Activated Carbon And How It Works 8.1
8.3 Factors Affecting Adsorption 8.3
8.4 Additional Adsorption Theory 8.5
8.5 Glossary 8.6

SECTION 9 -- OPERATING INFORMATION

Figure 1 – Vessel PV-1 to PV-2 Series Flow 9.1
Figure 2 – Vessel PV-2 On-Line Vessel PV-1 Carbon Transfer 9.2
Figure 3 – Series Flow Vessel PV-2 to PV-1 ..... 9.3
Figure 4 – Vessel PV-1 On-Line Vessel PV-2 Carbon Transfer 9.4
Figure 5 – Parallel Flow Vessel PV-1 and PV-2 ..... 9.5
Figure 6 – Vessel PV-2 On-Line Vessel PV-1 Backwashing 9.6
Figure 7 – Vessel PV-1 On-Line Vessel PV-2 Backwashing 9.7
Figure 8 – Calgon Carbon Standard Trailer 9.8
Figure 9 – Calgon Carbon Triple Compartment Trailer 9.9
Carbon Acceptance Canister Instructions 9.10
Spare Parts Program 9.12
Video Agreement 9.13

CALGON CARBON CORPORATION ♦ COPYRIGHT 2009 ♦ ALL RIGHTS RESERVED

SECTION 10 – MEDIA/PRESSURE DROP INFORMATION

- Resin Sales Specification Sheet – CalRes 2109
- Material Safety Data Sheet – CalRes 2109
- Activated Carbon Product Bulletin/Specifications – Filtrasorb 300
- Material Safety Data Sheet – Filtrasorb 300
- Curve: Rate Of Wetting Versus Time For Granular Activated Carbon
- Curve: GAC Percent Bed Expansion
- Curve: IX Per Cent Bed Expansion (Later)
- Application Bulletin: Disinfection Of Granular Activated Carbon
- System Pressure Drop
- Model 12 GAC Pressure Drop Curve – Series Operation
- Model 12 GAC Pressure Drop Curve – Backwash (Later)
- Model 12 IX Pressure Drop Curve – Series Operation
- Model 12 IX Pressure Drop Curve – Backwash (Later)

SECTION 11 – ASME SECTION VIII U1A FORMS

SECTION 12 -- SPECIFICATIONS AND CATALOG CUT SHEETS

SECTION 13 -- SHIPPING SPECIFICATION

SECTION 14– DRAWINGS

CALGON CARBON CORPORATION ♦ COPYRIGHT 2009 ♦ ALL RIGHTS RESERVED

CALGON

CALGON CARBON CORPORATION

SECTION 1

SYSTEM DESCRIPTION

SECTION 1

SYSTEM DESCRIPTION

1.1 Overview

The system is designed to treat 7,000 gpm of well water for Perchlorate (ClO4), Trichloroethene (TCE), Tetrachloroethylene (PCE), 1,2-Dichloroethane (1,2-DCA), Carbon Tetrachloride (CCl4) and 1,2,3 – Trichloropropane (1,2,3-TCP).

Design Feed Water Quality to Treatment System
(Per Table 1 of RFP)

Perchlorate	Nitrate	Sulfate	Chloride	Bicarbonate	TCE	PCE	1,2-DCA	CCl_4	1,2,3 -TCP
(ppb)	(ppm)	(ppm)	(ppm)	(ppm)	(ppb)	(ppb)	(ppb)	(ppb)	(ppb)
45	24	55	53	230	3.2	0.59	0.46	2.7	0.02

Design Treated Water Quality from Treatment System
(Per Table 1 of RFP)

Perchlorate	Nitrate	Sulfate	Chloride	Bicarbonate	TCE	PCE	1,2-DCA	CCl_4	1,2,3 -TCP
(ppb)	(ppm)	(ppm)	(ppm)	(ppm)	(ppb)	(ppb)	(ppb)	(ppb)	(ppb)
<4	36	60	60	NA	<0.5	<0.5	<0.5	<0.5	<0.005

The volatile organic contaminates will require a separate treatment sub-system (carbon) than the anions (ion exchange resin) to efficiently remove them from the well water to achieve the required treatment goals.

1.2 Perchlorate (ClO_4) Removal System

The water is treated for perchlorate prior to the VOC removal system. 6,300 - 7,000 gpm of the well water flow is passed through (3) 10 micron cartridge filters in parallel to remove sediment and particulates which may be discharged from the well pumps to prevent fouling and excessive pressure drop across the treatment systems. The well water is then directed and distributed between (4) fixed bed ion exchange systems. The ion exchange systems will be CCC Model 12 units, which consist of (2) 12' diameter vessels and the necessary piping, valves and other components required to operate them in a lead/lag configuration (series flow through first one resin bed and then the other) . Each vessel will contain single-use, ion exchange resin for perchlorate removal. The resin will become saturated with perchlorate over time. Once the lead resin bed has become saturated with perchlorate, the resin is

replaced with fresh resin and the bed is placed in the lag position (with the former lag resin bed placed in the lead position). The saturated resin is disposed of.

Virgin resin beds will be backwashed with treated water (free of perchlorates) prior to being brought on-line for the first time. The backwash water will be passed through a carbon trailer prior to being discharge to the sewer. Resin vessels that are not in service for periods greater than a week will have 5 bed volumes of city water passed through per vessel per week to ensure the water in the vessel has been completely turned over.

1.3 Volatile Organic Contaminates (VOC) Removal System

The effluent water from the perchlorate removal sub-system will be distributed between (5) fixed bed absorbers units. These adsorbers systems will be CCC Model 12 systems, which consist of (2) 12' diameter vessels and the necessary piping, valves and other components required to operate them in a lead/lag configuration (series flow through first one GAC bed and then the other). Each vessel will contain Filtrasorb 300 granulated, activated carbon (GAC). This GAC will become saturated with VOCs over time. Once the lead GAC bed has become saturated with the VOCs, the GAC is replaced with fresh GAC and the bed is placed in the lag position (with the former lag GAC bed placed in the lead position). The saturated GAC is disposed of or sent offsite for thermal reactivation.

Prior to being brought online, the carbon beds should be backwashed with clean water to stratify the bed and remove carbon fines. To prevent fouling and excessive pressure drop across the GAC adsorbers overtime, provisions need to be made for the periodic backwashing of the GAC beds.

GAC beds which have sat idle for an extended period of time may need to be exposed to a caustic solution to sterilize the bed followed by an in situ neutralization.

CALGON CARBON CORPORATION ♦ COPYRIGHT 2009 ♦ ALL RIGHTS RESERVED

CALGON

CALGON CARBON CORPORATION

SECTION 2

INSTALLATION

SECTION 2

2.0 INSTALLATION

In addition to the instructions below, refer to the Shipping Specification included with this manual for instruction on shipping and handling of large adsorber systems.

2.1 FOUNDATIONS

The equipment can be set on a permanent or temporary foundation. A temporary foundation could be a steel skid or plate, paved area or concrete foundation to which the adsorber vessels can be secured. Any foundation, either temporary or permanent, must be adequate to support the operating weight of the unit. See the Calgon Carbon Corporation general arrangement drawing for the dimensions and weights of the system.

Before installation of a permanent system, the adsorber tanks should be oriented on the foundation to ensure that the inlet and outlet opening and anchor lugs are positioned properly. Anchoring can be installed either in the foundation or at time of vessel installation, provided local codes or regulations are satisfied. The outline of the adsorbers should be marked on the foundation.

2.2 EQUIPMENT INSTALLATION

A crane is required to off-load the vessels and piping skid. Lifting lugs are provided on all the vessels. A properly trained and experienced rigging crew should be employed to set the equipment. The vessels should be set on the foundation in a level position and be anchored as required by local codes and seismic regulations. Each vessel must be individually set.

1. The following instructions are typical for large modular adsorber systems. Refer to the project drawings for specific details; i.e. dimensions, weights and pipe sizes.
2. Before the equipment is shipped, a site visit is recommended to review specific site conditions that may affect delivery or installation. Special note should be made for:
   - Overhead clearances – power lines, trees, plant piping
   - Access to site – fences, trees, locations within neighborhood or plant
   - Soil conditions – Can the delivery truck get close to the installation site?
   - Foundations – Properly cured? Correct size to accept new system?

3. Receive adsorption equipment in accordance with plant site requirements. Typically, one truck is used to ship the equipment. Shipment is normally comprised of the following items:

   - (2) Adsorber Vessels; Refer to project specific drawings for exact vessel dimensions and weight.
   - (12) Prefabricated pipe spools.
   - (1) Crate of hardware; Containing bolts, gaskets, pipe supports and u-bolts, gages etc.

- (1) Valve Rack; Refer to the following table for the weight of a pipe rack.

Pipe Size	Weight
6”	2,800 lbs.
8”	3,900 lbs.
10”	6,300 lbs.

Refer to the project drawings and material list enclosed in the crate for a comprehensive account of components provided for the particular job being installed.

4. Off load the equipment from truck to the pre-prepared mounting location. Set equipment on properly formulated foundation ensuring weight loading, anchor bolt depth, smooth level surface and adequate dimension for equipment footprint. For recommended lifting procedures refer to the section titled Lifting & Handling Guidelines.

5. The following installation steps can be accomplished in utilizing a crane for one day. Refer to the installation drawing, Figure 1, for generalized details and the project drawings for more specific details.
   - Set one vessel in proper location on the foundation
   - Position valve rack at the estimated point of hook-up. Make sure that vessel and valve rack are set true and level to plan.
   - Align the effluent nozzle on the bottom head, the effluent pipe, and rubber expansion joint with the appropriate valve rack connection.
   - Bolt-up snug when alignment is satisfactory.
   - Align the influent piping to the designated valve rack connection and connect expansion joint piping with tank nozzle on the top of the vessel, and bolt-up snuggly.
   - Attach all pipe bracket supports and u-bolts as provided.
   - When it is determined that complete line up is acceptable finish bolting both effluent and influent lines.
   - Set the second vessel into position and line up second vessel with valve rack and effluent/influent piping as previously described.
   - When accomplished finish the bolt-up.
   - When completely satisfied with installation bolt vessels to foundation using predetermined anchor bolt hardware.
   - Connect (1) carbon fill, and (1) carbon discharge line to each vessel.
   - Install the vessel sample ports and connecting hardware as detailed on the project drawings.
   - Mount pressure gauges and instruments as shown on project drawings.
   - Install the Carbon Acceptance Canister.
   - If equipment is supplied with an electrical panel, run power feed to the panel and make connections per the interconnection drawing.

6. The customer should connect from the connections on the pipe rack; influent, effluent, backwash supply and backwash outlet, to the plant supply piping. Gaskets and bolts supplied by the customer.
   Client supplied effluent piping for the adsorption system should include an anti-siphon loop or adequate backpressure to ensure that the water level in the vessels covers the media during operation.

   The pressure relief discharges to the backwash outlet/vent line. The backwash outlet/vent line should have unrestricted flow to atmosphere.

7. Each vessel has underdrain nozzles pre-installed by CCC. For internal underdrains; ring type and internal cones, the septa should be checked for tightness before the manway covers are closed and secured.
8. The system is now ready for hydro testing and disinfection as required.

2.3 GENERAL HANDLING AND LIFTING INSTRUCTIONS

The recommended lift points are shown on the installation drawing; lifting lugs on vessel top head, vessel leg anchor base plates and location shown on the valve rack.

1. Always make lift attachments to the designated lift points when using chains or cables. Never lift using a vessel nozzle.
2. Operators of hoisting and moving equipment must follow proper rigging procedures at all times.
3. Always lift - **NEVER** roll or slide equipment.
4. When moving equipment, do not drop or allow hard impact. Do not allow cables, hooks, or spanner bars to swing against or slide over the vessel.
5. Never allow tools to strike or drop on equipment (especially inside or outside of vessels).
6. Never allow bare metal chains or cable to slide against the metal surface of equipment causing marring, deformation or serious defects in the metal.
7. Avoid temporarily bracing vessels or equipment with metal structures, wood is acceptable for this application. Avoid striking vessel with tools or instruments of any kind.
8. All ladders used inside vessels shall have ends protected. Ladders shall have rubber protectors to prevent damaging the lining.
9. Workmen entering a lined vessel must wear soft-soled shoes, free of grit. Workmen must follow plant and OSHA requirements for confined space entry.

2.4 RECOMMENDED UNLOADING AND PLACEMENT PROCEDURES
(Refer to Shipping Specification VS13)

1. Vessel and miscellaneous equipment unloading shall be accomplished in such a manner as to avoid damage to finished surfaces. Adequate padding may be necessary around the lifting point. Wooden chalks and crating should be carefully removed where necessary.
2. Utilize chains, nylon slings, or a spreader bar for hoisting vessels. The angle between the lifting point and the top of the equipment must always be 60° or greater. Workmen shall keep control over the vessel with guidelines. No metal rigging may come in contact with the vessel except for specifically designed lift points or lifting lugs.
3. A crane is required to off-load, move and hoist into position the vessels and piping assemblies. Lift points are provided on all pieces. A properly trained and experienced rigging crew shall be employed to set the equipment. The equipment shall be set on a solid foundation, made level as possible and anchored as required by local codes and seismic regulations. Each vessel must be individually set.
4. Piping connection points to vessels and valve rack shall be free of mechanical stress. Do not force pipe connections to these points for damage can result.
5. Follow safe anchor bolt installation practices.
6. Dirt marks shall be cleaned from the surface of all Equipment upon completion of the installation. Marred paint resulting on Vessels and all equipment pieces shall be touched up with a paint of comparable color and quality. More severe damage requires appropriate surface cleaning and preparation before primer and finishing paint are applied.

CALGON CARBON CORPORATION ♦ COPYRIGHT 2009 ♦ ALL RIGHTS RESERVED

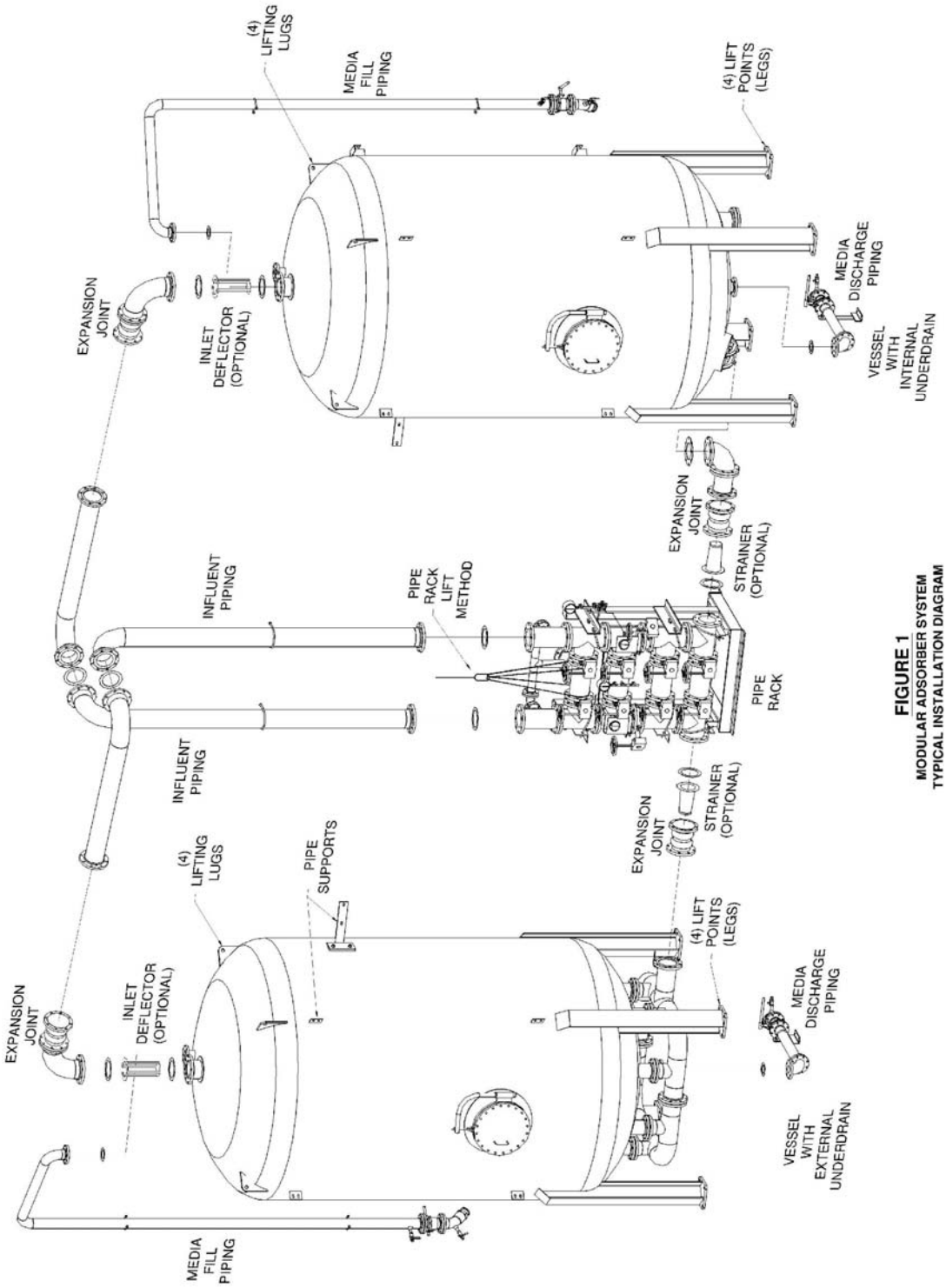

FIGURE 1
MODULAR ADSORBER SYSTEM
TYPICAL INSTALLATION DIAGRAM

CALGON

CALGON CARBON CORPORATION

SECTION 3

ION EXCHANGE OPERATION

SECTION 3

3.0 ION EXCHANGE OPERATION

3.1 PRE-OPERATION CHECK-OUT

All equipment and systems affiliated with the ion exchange system such as pumps, filters, etc. should be checked out according to the manufacturer's instructions. Specific activities to complete before operating the ion exchange equipment should include the following:

1. Check all piping connections for proper installation and tightness.
2. Ensure that all gauges and instruments are functional and installed correctly. Re-zero or re-calibrate if necessary.
3. Close all valves in the ion exchange piping system.

For potable water treatment installations, the customer will be responsible for cleaning and disinfecting the vessels and piping prior to filling the system with resin. The procedures to complete this step in the installation process are the responsibility of the customer.

3.2 IX Vessel Disinfection

Prior to a virgin resin fill on new equipment, an IX vessel should be disinfected. The disinfection should be conducted as per CCC's standard procedure. This is recommended to prevent any pollutants that may have contaminated the interior of the IX vessel. The responsibility for conducting the disinfection can be either CCC's or the customers, depending on the agreed upon terms.

3.3 FILLING AN EXCHANGER WITH RESIN

After the system has been checked, the ion exchangers are ready to be filled with resin. The resin is transferred to the exchanger via vacuum or slurry. The detailed procedures for making the transfer are given in Section 4. Unlike activated carbon, ion exchange resin is supplied in the hydrated form and therefore does not require a wetting step. However, it is recommended that prior to transfer of the resin into the exchanger, the ion exchanger is filled ~ 1/3 full of water. This allows proper settling of the resin as it is transferred into the exchanger.

CALGON CARBON CORPORATION ♦ COPYRIGHT 2007 ♦ ALL RIGHTS RESERVED

3.4 BACKWASHING AND BACKFLUSHING

3.4.1 BACKWASH/BACKFLUSH – GENERAL

Backwashing and backflushing are procedures involving running clean, contaminant-free water upflow through the exchanger. Backwashing or backflushing of a resin bed can be done after fresh resin has been transferred into an exchanger and wetted, or during operation to remove sediment from the top of the bed.

If the exchangers are to be backwashed during operation, they should be backwashed prior to startup.

The reasons for backwashing before placing fresh resin on-line are to:

1. Size segregate the resin so subsequent backwashing will return the resin to the same relative position in the bed.
2. Remove any remaining air from the bed.
3. Remove resin fines which can, in some cases, lead to excessive pressure drop and flow restriction

Backwashing is done during operation to remove:

1. Sediment from the top of the bed.
2. Resin fines that may be plugging the underdrain nozzles and air that is binding the bed

The need to backwash is indicated by an increased bed pressure drop.

Backwashing an exchanger results in expanding the resin bed, removing air, suspended solids and resin fines and classifying the resin particles. The backwash flow rate depends upon the resin particle mesh size and the water temperature (refer to the bed expansion curve in Section 10). Generally, rates in the range of 1 to 1.5 gpm/ft² (113-170 gpm) are sufficient to remove solids, remove air, and expand the bed. However, backwashable Model 12 units are designed with significant straight side height to permit 30% bed expansion, and the selected backwash rate should limit the bed expansion to a maximum of 30%. For your system, refer to the flow diagram in the Drawing section of this O&M for the backwash flow rate.

Note
This rate assumes a 68°F backwash water source.
Use the bed expansion curve in the Section 10 to determine a backwash rate if the water source is at a different temperature.

3.4.2 BACKWASHING AN EXCHANGER

In this mode, a clean external source is used as the source for the backwash water. Note that the lead exchanger is taken out of service while the backwashing procedure takes place. This sequence applies to a series operated system, with the lag exchanger remaining on-line during the backwash.

1. Isolate the exchanger to be backwashed. If exchanger PV1 is to be backwashed, refer to Section 3.6.4 for valve sequencing. If exchanger PV2 is to be backwashed, refer to Section 3.6.6 for sequencing.
2. Open the vent valve (V5 for exchanger PV1, V6 for exchanger PV2).
3. Open the backwash water inlet valve (V8 for exchanger PV1, V7 for exchanger PV2) and start the backwash pump.
4. Open backwash effluent valve (V5 for exchanger PV1, V6 for exchanger PV2).

The backwash water enters the vessel through the effluent line and flows up through the underdrain and the resin bed. The backwash water discharge from the vent line should be observed for clarity to determine the duration of backwashing. Backwashing for high pressure drop should take approximately 10 minutes. If excessive sediment and turbidity exists in the untreated water, the backwashing times may have to be increased to 15 minutes. A fresh resin fill should be backwashed to classify the resin. The time required for this step is approximately 30 minutes or until the backwash discharge is free of fines.

3.4.3 STARTING SYSTEM AFTER BACKWASHING

The valve sequence given below describes the steps taken to bring a system on-line after backwashing. The valve numbers refer to bringing exchanger PV1 back on-line in the lead position. Valve numbers applying to placing exchanger PV2 back in the lead position are in parentheses.

1. Close the backwash water inlet valve V8. (V7)
2. Close vent valve V5. (V6)
3. Open crossover valve V10. (V9)
4. Open influent valve V1. (V2)
5. Close influent valve V2. (V1)

3.5 START-UP IN SERIES FLOW

The ion exchange system is normally operated in a series mode. Valves in the influent and effluent lines are opened or closed, as required, to set the operation of the ion exchange vessels in the desired configuration. The first bed in the system is called the lead bed. The second bed is referred to as the polish or lag bed.

The following sequence of steps should be followed to bring an Ion Exchange System on-line in the series mode:

1. Place the feed pump (s) in service to supply the ion exchange module at the required flow and pressure.

2. Check that all the valves in the ion exchange system are closed.

3. Open the valve in the effluent line from the polish exchanger (V4 for exchanger PV-1, V3 for exchanger PV-2).

4. Open the valve in the cross-over line between the exchangers (V10 for PV1 in the lead position, V9 for PV-2 in the lead position).

5. Start the feed pump and open the valve in the pump discharge line.

6. Slowly open the valve in the influent line to the lead exchanger (V1 for exchanger PV-1, V2 for exchanger PV-2) and allow the pressure to increase to the operating level. V1 and V2 should be opened slowly. The valve should be opened such that the flow to the exchanger is increased 100 gpm per minute until the desired flowrate is achieved.

7. Open the 3/4" valve located on the side wall of each vessel to bleed off any air that is trapped underneath the internal cone.

At this point, flow should be established downflow through both vessels and they will be on-line in series.

Set the flow rate to the system at the desired value after flow is established to the unit. The flow control meters and control instrumentation will be provided by the customer as required for the system.

CALGON CARBON CORPORATION ♦ COPYRIGHT 2007 ♦ ALL RIGHTS RESERVED

In order to obtain full utilization of the resin and prevent air entrapment and channeling in the bed, the water level must remain above the resin bed. To prevent the bed from draining due to gravity or loss of influent supply, a vacuum break (anti-siphon) loop or backpressure should be included by the customer in the effluent piping. This start-up sequence assumes that an anti-siphon loop is present in the effluent piping. If no anti-siphon loop or backpressure is present, start the system by starting the pump and opening the valves in the opposite order of the sequence given previously (i.e., open the influent valve first, followed by the cross-over valves and effluent valve).

3.6 STEADY STATE OPERATION

Once flow is established to both vessels and the flow rate is set, no further adjustments are made during normal operation. The operator should establish a routine to check the exchangers and to collect operating data. This data can be used to establish a maintenance schedule or to determine when fresh resin is needed. Inlet flow rates should not fall below 400 gpm per IX train. The differential pressure across the resin bed should not exceed 20 psi, nor should the delivery pressure exceed 125 psi. Lower than 400 gpm can result in flow channeling, which could lead to under utilization of the resin. Differential pressures greater than 20 psi could lead to physical damage to the resin beads, while delivery pressure greater than 125 psi will cause the vessels rupture disks to fail.

3.6.1 MONITORING

Sample connections are provided on the influent and effluent lines from each vessel to take periodic samples for analysis.

Pressure gauges are provided to determine the pressure drop across each resin bed. Taking periodic pressure readings will provide the operator with historic data for troubleshooting purposes. In the event that operating conditions change, the operator has the capability of taking corrective action.

3.6.2 VALVE OPERATION

All valves should be operated in a slow and even motion. Abrupt opening and closing of the valves can shock the system. Valves should be opened / closed such that the flow is increased / decreased 100 gpm per minute. Since complete shut-off of flow while a pump is operating could cause damage to the pump, the valves should be operated in the proper sequence in order to always maintain flow through the system. If the vessels are identified as PV1 and PV2 then the corresponding valve positions during ion exchange are given as follows:

PROCESS VALVE NUMBER	SERIES PV1 TO PV2 (FIGURE 1)	PV2 SINGLE OPERATION (FIGURE 2)	SERIES PV2 TO PV1 (FIGURE 3)	PV1 SINGLE OPERATION (FIGURE 4)	PARALLEL OPERATION (FIGURE 5)
V-1	Open	Closed	Closed	Open	Open
V-2	Closed	Open	Open	Closed	Open
V-3	Open	Open	Closed	Closed	Open
V-4	Closed	Closed	Open	Open	Open
V-5	Closed	Closed	Closed	Closed	Closed
V-6	Closed	Closed	Closed	Closed	Closed
V-7	Closed	Closed	Closed	Closed	Closed
V-8	Closed	Closed	Closed	Closed	Closed
V-9	Closed	Closed	Open	Closed	Closed
V-10	Open	Closed	Closed	Closed	Closed

Single stage operation occurs for short time periods, such as during resin transfer or during other routine maintenance on one of the exchanger vessels.

***Note**: Flow Sequence Changes (As Described In The Following Sections) Should Be Performed Only When Resin Change-outs Or Other Vessel Maintenance Is Required*.

3.6.3 EXCHANGER SEQUENCING: PV-1 LEAD, PV-2 LAG

This sequence should be used to start up the system in series mode from PV-1 to PV-2. Refer to Section 3.4 for additional details.

Starting valve position: All valves closed.

- Open valve V3
- Open valve V10
- Open valve V1

At this point, flow should be established from PV-1 to PV-2.

3.6.4 EXCHANGER SEQUENCING: TAKING EXCHANGER PV-1 OFF-LINE

When exchanger PV-1 is taken off-line for resin transfer, all of the process flow should be sent through exchanger PV-2.

Starting valve position: Series flow from PV-1 to PV-2.

- Open valve V2
- Close valve V10
- Close valve V1

Flow should now be established through exchanger PV2 with exchanger PV-1 off-line for resin transfer.

3.6.5 Exchanger Sequencing: PV-1 Back On-Line As Lag Vessel

After exchanger PV-1 is filled with fresh resin, it should be placed on-line in the polish position with exchanger PV-2 moved to the lead position.

Starting valve position: Single stage flow to PV-2.

- Open valve V9
- Open valve V4
- Close valve V3

Flow should now be established from exchanger PV-2 into exchanger PV-1.

3.6.6 EXCHANGER SEQUENCING: TAKING EXCHANGER PV-2 OFF-LINE

When exchanger PV-2 is taken off-line for resin transfer, all of the process flow should be sent through exchanger PV-1.

Starting valve position: Series flow from PV-2 to PV-1.

- Open valve V1
- Close valve V9
- Close valve V2

Flow should now be established through exchanger PV-1 with exchanger PV-2 off-line for resin transfer.

CALGON CARBON CORPORATION ♦ COPYRIGHT 2007 ♦ ALL RIGHTS RESERVED

3.6.7 EXCHANGER SEQUENCING: PV-2 BACK ON-LINE AS LAG VESSEL

After exchanger PV-2 is filled with fresh resin, it should be placed on-line in the polish position, with exchanger PV-1 moved to the lead position.

Starting valve position: Single stage flow to PV-1.

- Open valve V10
- Open valve V3
- Close valve V4

Flow should now be established from exchanger PV-1 into exchanger PV-2.

3.7 SHUTDOWN

3.7.1 SHORT-TERM SHUTDOWN

For short duration shutdowns lasting less than one week, little needs to be done. Close all valves in the exchanger piping system and open the vent line valves on each vessel. The feed pumps should be shut down and the valves closed in the lines to and from the pumps. Any drain valves in the pump casing should be opened for the duration of the shutdown. Freeze protection measures such as draining lines at the low points should be taken when there is a chance of freezing. Freeze protection measures are the responsibility of the client.

3.7.2 EXTENDED SHUTDOWNS

For extended shutdowns, in addition to the steps in Section 3.8.1, the exchangers should be drained of all water and filled with clean, non chlorinated, treated water. Water in vessel should be replaced every week. Run water through the vessel at a minimum flowrate of 400 gpm for 5 minutes. Bring the exchangers back on-line in the downflow mode, monitor the effluent for perchlorate concentration and monitor the pressure drop.

3.8 OPERATIONAL SCENARIOS

Refer to NASA's technical memorandum "Proposed Utility Water Treatment Procedures for the City of Pasadena Monk Hill Treatment System" and Pasadena Water and Power's document "MHTS Well Purging and Vessel Backwash Sequencing for Utility Waters" for the correct procedures concerning well sequencing during the operating year.

3.9 TROUBLESHOOTING GUIDE

PROBLEM		PROBABLE CAUSE		REMEDY
High pressure drop across exchangers.	1.	Bed not flooded. Bed is air bound.	1.	Open vent valve or resin inlet valve to release pressure. Add water downflow to fill vessel. Establish constant forward flow, then close valve.
	2.	High feed pump pressure.	2.	Throttle feed pump.
	3.	High suspended solids loading.	3.	Test feed for suspended solids. Install influent filter.
	4.	Improper valve settings.	4.	Check valve sequence.
	5.	Resin in effluent retainer.	5.	Shut down system. Clean out retainer and effluent line. Remove resin from exchanger. Inspect vessel using side manway and repair damaged underdrain in exchanger.
Resin in the effluent.	1.	Internal mechanical (i.e. underdrain) failure.	1.	Determine which exchanger is causing the problem, then remove resin and make repairs. In addition, inspect resin retainer in effluent line and replace if necessary.
Leaking flange.	1.	Loose bolts.	1.	Tighten bolts.

3.8 TROUBLESHOOTING GUIDE (CONTINUED)

PROBLEM		PROBABLE CAUSE		REMEDY
Excessive flow out vent line.	1.	Broken rupture disk.	1.	Check the following conditions before replacing disk: 1) Check downstream valving to make sure that the system is not plugged off. 2) Check feed pump pressure to make sure it is not too high. 3) Check process valve sequence. 4) Check that excessive pressure build-up did not occur in closed vessels during extended shutdowns. Once the potential source of over-pressurization is removed, replace rupture disk.
Sudden high contaminant concentration in effluent.	1.	Resin heel from improper transfer.	1.	Wait until contaminant flushes out. Review transfer procedures.
	2.	Leaking valve.	2.	Repair/replace valve.
	3.	Mass transfer zone has extended into effluent.	3.	Replace resin.

3.8 TROUBLESHOOTING GUIDE (CONTINUED)

PROBLEM		PROBABLE CAUSE		REMEDY
Premature breakthrough of perchlorate in the effluent.	1.	Influent concentration change.	1.	Confirm by analyzing effluent sample(s) before changing resin.
	2.	Air in the influent stream.	2.	Open vent valve and fill bed upflow with water as required.
	3.	Leaking valves.	3.	Check operation of valves in influent and effluent lines.
	4.	Incorrect valve sequence.	4.	Sequence the flow through the system properly.
Resin heel in empty vessel.	1.	Insufficient rinse water.	1.	Provide additional rinse water flow.
	2.	Mechanical failure.	2.	Check vessel internal parts and make repairs.
	3.	Foreign material on the resin.	3.	Rinse vessel to remove resin.

CALGON CARBON CORPORATION ♦ COPYRIGHT 2007 ♦ ALL RIGHTS RESERVED

CALGON

CALGON CARBON CORPORATION

SECTION 4

RESIN TRANSFER PROCEDURE

SECTION 4

4.0 RESIN TRANSFER PROCEDURE - STANDARD TRAILER

The procedures that are detailed in this section of the manual are for Calgon Carbon's standard resin trailer. Resin is delivered on a flat-bed trailer in 1 m3 supersacks. The maximum number of supersacks which can be delivered on a single trailer is 22 sacks for a total of 22 m3 / 800 ft3.

4.1 SITE REQUIREMENTS

A flat paved area is needed to support the Calgon Carbon service trailer which may weigh up to 100,000 pounds. The overhead clearance required for the ion exchanger system is 13 feet.
The utility requirements are required by each exchanger during resin changeout.

4.2 SPENT RESIN TRANSFER TO DOT SUPER SACKS

Spent resin transfer from the exchanger to the DOT Super sacks is accomplished using vacuum. The vacuum system is equipped with a hopper which will extend out at which point a DOT super sack will be place underneath it. The super sack will be supported via forklift and straps. When the super sack is full of spent resin it will be place in a pre-designated location on a pallet. Once all spent resin is out of the exchanger, placed into DOT super sacks, and on pallets, the spent resin transfer is complete.

4.2.1 SPENT RESIN TRANSFER

A. Prepare for Spent Resin Transfer:

1. Isolate the exchanger needing service via closing all appropriate valves.

2. Dewater the exchanger that needs to be serviced. Two ways to accomplish this follow:

   Gravity flow via existing effluent piping.

   Connect air fitting and pressurize the exchanger to push water through existing effluent piping.

3. Once the exchanger is fully dewatered, relieve the pressure from the exchanger via 4” vacuum fill line.

4. Once all pressure is relieved from the exchanger, connect the 4” flex hose from the spent resin discharge line to the vacuum system.

B. Transfer Spent Resin

1. Power up the vacuum system.

2. Place a DOT supersack under the vacuum hopper with forklift and straps supporting it in place.

3. Open the 4” resin discharge line at the bottom of the exchanger.

4. The resin will flow from the Model 10 to the hopper. The hopper will fill with resin until it is full. It then discards to the supersack. Two hoppers will fill a supersack. The spent resin transfer will take about 3-4 hours to complete.

5. Once all spent resin has been vaced out of the Model 10, shut down the vac system and open the side manway to visually inspection the exchanger internal.

6. Restart the vac system and using a 1” water line, rinse the exchanger of any residual resin left inside. Alternatively, the effluent water from the on-line exchanger can be used if a tap is available from any of the exchangers.

C. End Transfer

1. Secure the side manway.

2. Remove 4” transfer hose from the bottom discharge line.

3. Open the exchanger vent valve (V5 or V6) to further aid the venting.

4. Close the exchanger resin outlet valve (V12 for exchanger PV1, V11 for exchanger PV2).

CALGON CARBON CORPORATION ♦ COPYRIGHT 2009 ♦ ALL RIGHTS RESERVED

4.3 FRESH RESIN TRANSFER FROM SUPERSACKS

Fresh resin is transferred again using vacuum. Each supersack is first dumped into an open top holding tank. The transfer hose from the holding tank to the exchanger resin transfer line is connected. After putting a water cushion in the exchanger, the vacuum hose is attached to the piping manifold at a special 45o pipe which replaces the backwash connection

4.3.1 TRANSFER RESIN TO EXCHANGER

A. Prepare for Transfer

1. Open the exchanger vent valve (V-14 to vent PV-1 or V-13 to vent PV-2) and the exchanger cone vent valve.

2. Slowly open both backwash valves (V-8 for PV-1 and V-7 for PV-2) to allow treated water to flow from the exchanger currently on-line to the exchanger to be filled with resin. This water cushion allows the resin bed to settle during transfer and prevent channeling during startup. This also helps to protect the underdrain system and vessel lining during resin transfer. If the amount of water cannot be measured, fill the vessel until water flows from the air bleed nozzle located at the point where the internal cone meets the vessel sidewall. After water flows from this point, continue to fill the vessel for twice the period of time required for water to exit the cone vent valve.

3. Once the water cushion has been added, close all valves on the exchanger.

4. Connect the 4” flexible hose to the exchanger fill line.

5. Connect another section of 4” flexible hose from the 4” male adapter on the piping rack to the vac system.

B. Transfer Fresh Resin

1. Open the exchanger resin fill line valve (V14 for exchanger PV-1, V13 for exchanger PV-2).

2. Start the vac system.

3. Lift the supersack above the holding tank using the forklift.

CALGON CARBON CORPORATION ♦ COPYRIGHT 2009 ♦ ALL RIGHTS RESERVED

4. Carefully cut the bottom of the supersack, allowing the resin to flow from the supersack into the holding tank.

5. When the supersack has emptied, lower the emptied sack, remove it from the forks, and pick up the next supersack.

6. Repeat steps 3, 4, and 5 until the vessel has a sufficient amount of resin

C. End Transfer

1. Shut down vacuum system.

2. Close the vacuum vent line and remove the flex hose.

3. Exchanger is now ready for more water and resin backwash.

CALGON CARBON CORPORATION ♦ COPYRIGHT 2009 ♦ ALL RIGHTS RESERVED

CALGON

CALGON CARBON CORPORATION

SECTION 5

GAC OPERATION

SECTION 5

5.0 OPERATION

5.1 PRE-OPERATION CHECK-OUT

All equipment and systems affiliated with the granular carbon adsorption system such as pumps, filters, etc. should be checked out according to the manufacturer's instructions. Specific activities to complete before operating the adsorption equipment should include the following:

1. Check all piping connections for proper installation and tightness.
2. Ensure that all gauges and instruments are functional and installed correctly. Re-zero or re-calibrate if necessary.
5. Close all valves in the adsorber piping system.
4. Install the carbon acceptance canister (if provided) after checking to ensure it is filled with carbon.

For potable water treatment installations, the client will be responsible for cleaning and disinfecting the vessels and piping prior to filling the system with carbon. The procedures to complete this step in the installation process are the responsibility of the client.

5.2 FILLING AN ADSORBER WITH CARBON

After the system has been checked, the adsorbers are ready to be filled with granular activated carbon. The carbon is transferred to the adsorbers as a water slurry from Calgon Carbon trailers. The detailed procedures for making the transfer are given in Section 4.

The trailer driver connects the necessary hoses and operates all the valves on the trailer. A plant operator should be available to operate the valves on the adsorber system.

After all the carbon is transferred from the trailer, the driver disconnects the hoses and closes the valves on the trailer. The plant operator closes the valves in the vent and carbon fill lines on the adsorber. The adsorber is now ready to be backwashed or backflushed.

CALGON CARBON CORPORATION ♦ COPYRIGHT 2009 ♦ ALL RIGHTS RESERVED

5.3 WETTING (DEAERATING THE CARBON)

In a typical bed of virgin carbon, the pore volume is approximately 40% of the bed volume. Carbon which is shipped dry will contain air in these pores. Therefore, the carbon must be properly wetted prior to being placed on stream. If this is not done, the air within these pores will displace into the void spaces between the carbon particles during operation and cause high pressure drop and channeling in the adsorbers. These problems can cause premature breakthrough of contaminants. Air will not migrate out of the bed during normal downflow operation.

The time required for wetting is a function of liquid temperature and viscosity. Generally, a minimum wetting period of 24 hours is required using water at ambient temperatures, although a period of up to 72 hours is preferred for complete wetting. After wetting, backwashable adsorbers should be backwashed to remove air and segregate the carbon by size.

As an alternative, the Calgon Carbon Service trailer containing fresh carbon may be filled with water and allowed to stand for several hours. When the fresh carbon is transferred to the adsorber, the adsorber should be backwashed to eliminate any remaining air.

After the carbon has been wetted, the adsorber should be drained and then backfilled until water flows out the system vent line. The adsorber should be filled up-flow at 2 gpm/ft^2 maximum. For a Model 12 System this is 225 gpm, maximum.

If the unit must be placed on-stream before the carbon has been wetted, the adsorbers should be drained and backfilled when the pressure drop becomes prohibitive or after two days of operation, whichever occurs first.

For process applications, the same procedure is required. If the process liquid cannot be diluted with water and the carbon must be wetted with the process liquid there will be a significant heat of adsorption. In this case, Calgon Carbon should be contacted for specific instructions on the method to be used for wetting.

CALGON CARBON CORPORATION ♦ COPYRIGHT 2009 ♦ ALL RIGHTS RESERVED

5.4 BACKWASHING AND BACKFLUSHING

5.4.1 BACKWASH/BACKFLUSH -- GENERAL

Backwashing and backflushing are procedures involving running clean, contaminant-free water upflow through the adsorber. Backwashing or backflushing of a carbon bed can be done after fresh carbon has been transferred into an adsorber and wetted, or during operation to remove sediment from the top of the bed.

If the adsorbers are to be backwashed during operation, they should be backwashed prior to startup. The reasons for backwashing before placing fresh carbon on-line are to:

1. Size segregate the carbon so subsequent backwashing will return the carbon to the same relative position in the bed.
2. Remove any remaining air from the bed.
3. Remove carbon fines which can, in some cases, lead to excessive pressure drop and flow restriction.

Backwashing is done during operation to remove:

1. Sediment from the top of the bed.
2. Carbon fines that may be plugging the underdrain nozzles.
3. Air that is binding the bed. The need to backwash is indicated by an increased bed pressure drop.

Backwashing an adsorber results in expanding the carbon bed, removing air, suspended solids and carbon fines and classifying the carbon particles. The backwash flow rate depends upon the carbon particle mesh size and the water temperature (refer to the bed expansion curve in Section 8). Model 12 units are designed with significant straight side height to permit 30% bed expansion, and the selected backwash rate should limit the bed expansion to a maximum of 25%.

For your system, refer to Section 1.1 for the design backwash water flow rate. Note that this rate assumes a 55˚F backwash water source. Use the bed expansion curve in Section 8 to determine a backwash rate if the water source is at a different temperature.

In a system that is not designed for backwashing, an operation termed backflushing can be used to remove fines from the upper portion of the bed. This operation will not remove fines from the lower portion of the bed because it does not expand the bed. Expansion of the bed allows the fines at the bottom of the bed to move to the top. However, fines do not always cause high pressure drop, and their removal is not always necessary.

The backflushing rate is 2 to 3 gpm/ft^2 and this is not significant enough to expand the carbon bed. For the Model 10 adsorber this is a flow rate from 225 gpm to 340 gpm. Flow rates of less than 225 gpm will not expand the bed; therefore, size segregation of the bed will not occur. The time required for backflushing is 30 to 45 minutes.

Normally when backwashing or backflushing, a clean external water source is used. The stream should be compatible with the system and free of suspended solids and organic contaminants which might affect adsorption. If necessary, effluent from the adsorber system may be used as the water source. In this case a tank with storage capacity for 15 minutes of backwash water (20,000 gallons) will be necessary.

When normal downflow operation is started after backwashing, the initial 5 to 15 minutes of effluent flow will be dark due to a small quantity of fines. Under normal operating conditions, this condition will clear up.

5.4.2 BACKWASHING AN ADSORBER (FIGURES 6 AND 7 IN SECTION 8)

In this mode, a clean external source is used as the source for the backwash water. Note that the lead adsorber is taken out of service while the backwashing procedure takes place. It is recommended that the entire system be taken off-line to retain all process conditions. However, for continuous flow, the lag adsorber can remain on-line while the lead bed is being backwashed.

For a system operating in parallel, only the vessel needing backwashed should be taken off-line when backwashing is required.

1. Isolate the adsorber to be backwashed. If adsorber PV1 is to be backwashed, refer to Section 5.6.4 for valve sequencing. If adsorber PV2 is to be backwashed, refer to Section 5.6.6 for sequencing. If entire system is taken off-line, make sure source is turned off (i.e., pump) and all valves at system are closed.
2. Open the vent valve (V5 for adsorber PV1, V6 for adsorber PV2).

3. Open the backwash water inlet valve (V8 for adsorber PV1, V7 for adsorber PV2) and start the backwash pump. Backwash flow should be increased to design flow gradually, avoiding water hammer.

The backwash water enters the vessel through the effluent line and flows up through the underdrain and the carbon bed. The backwash water discharge from the vent line should be observed for clarity to determine the duration of backwashing. Backwashing for high pressure drop should take approximately 10 minutes. If excessive sediment and turbidity exists in the untreated water, the backwashing times may have to be increased to 15 minutes. A fresh carbon fill should be backwashed to classify the carbon. The time required for this step is approximately 15 minutes or until the backwash discharge is free of fines.

5.4.3 RE-STARTING SYSTEM AFTER BACKWASHING

The valve sequence given below describes the steps taken to bring a system on-line after backwashing. The valve numbers refer to bringing adsorber PV1 back on-line in the lead position. Valve numbers applying to placing adsorber PV2 back in the lead position are in parentheses.

1. Close the backwash water inlet valve V8. (V7)
2. Close vent valve V5. (V6)
5. Open cross-over valve V10. (V9)
4. Open influent valve V1. (V2)
5. Close influent valve V2. (V1)

5.5 START-UP

5.5.1 SERIES FLOW

The adsorber system is normally operated in a series mode. Valves in the influent and effluent lines are opened or closed, as required, to set the operation of the carbon vessels in the desired configuration. The first bed in the system is called the lead bed. The second bed is referred to as the polish or lag bed.

The following sequence of steps should be followed to bring an adsorption system on-line in the series mode:

1. Check that all the valves in the adsorption system are closed.

2. Open the valve in the effluent line from the polish adsorber (V4 for adsorber PV1, V3 for adsorber PV2).
5. Open the valve in the cross-over line between the adsorbers (V10 for PV1 in the lead position, V9 for PV2 in the lead position).
4. Start the feed pump and open the valve in the pump discharge line.
5. Slowly open the valve in the influent line to the lead adsorber (V1 for adsorber PV1, V2 for adsorber PV2) and allow the pressure to increase to the operating level.
6. Open the 3/4" valve located on the side wall of each vessel to bleed off any air that is trapped underneath the internal cone.

At this point, flow should be established downflow through both vessels and they will be on-line in series.

Set the flow rate to the system at the desired value after flow is established to the unit. The flow control meters and control instrumentation will be provided by the client as required for the system.

In order to obtain full utilization of the carbon and prevent air entrapment and channeling in the bed, the water level must remain above the carbon bed. To prevent the bed from draining due to gravity or loss of influent supply, a vacuum break (anti-siphon) loop or backpressure should be included by the client in the effluent piping. This start-up sequence assumes that an anti-siphon loop is present in the effluent piping. If no anti-siphon loop or backpressure is present, start the system by starting the pump and opening the valves in the opposite order of the sequence given previously (i.e., open the influent valve first, followed by the cross-over valves and effluent valve).

After the system is operating at steady state, water flow to the Carbon Acceptance Canister (CAC) can be started. The GAC in the canister must first be wetted, refer to section 5.3 for wetting instructions and section 8 for information on the carbon acceptance canister.

5.5.2 PARALLEL FLOW

The following sequence of steps should be followed to bring an adsorption system on-line in the parallel mode:

1. Check that all the valves in the adsorption system are closed.
2. Open the valves in the effluent lines from the adsorbers (V3 and V4).

5. Start the feed pump and open the valve in the pump discharge line.
4. Slowly open the valve in the influent line to one adsorber (either V1 or V2) and allow the pressure to increase to the operating level.
5. Slowly open the valve in the influent line to the other adsorber (either V1 or V2) and allow the pressure to increase to the operating level.
6. Open the 3/4" valve located on the side wall of each vessel to bleed off any air that is trapped underneath the internal cone.

At this point, flow should be established downflow through both vessels and they will be on-line in parallel.

Set the flow rate to the system at the desired value after flow is established to the unit. The flow control meters and control instrumentation will be provided by the client as required for the system.

In order to obtain full utilization of the carbon and prevent air entrapment and channeling in the bed, the water level must remain above the carbon bed. To prevent the bed from draining due to gravity or loss of influent supply, a vacuum break (anti-siphon) loop or backpressure should be included by the client in the effluent piping. This start-up sequence assumes that an anti-siphon loop is present in the effluent piping. If no anti-siphon loop or backpressure is present, start the system by starting the pump and opening the valves in the opposite order of the sequence given previously (i.e., open the influent valves first, followed by the effluent valves).

For parallel operation, flow is established to each vessel by opening the valves as indicated previously. Changing the flow to one vessel may result in a flow change to the other vessel on the skid. This occurs because the vessels share a common influent and effluent line. Flow meters can be installed in the individual influent lines to each vessel to balance the flow to each unit if required.

After the system is operating at steady state, water flow to the Carbon Acceptance Canister (CAC) can be started. The GAC in the canister must first be wetted, refer to section 5.3 for wetting instructions and section 8 for information on the carbon acceptance canister.

5.6 STEADY STATE OPERATION

Once flow is established to both vessels and the flow rate is set, no further adjustments are made during normal operation. The operator should establish a routine to check the adsorbers and to collect operating data. This data can be used to establish a maintenance schedule, to determine when backwashing/backflushing is necessary, or to determine when fresh carbon is needed.

5.6.1 MONITORING

Sample connections are provided on the influent and effluent lines from each vessel to take periodic samples for analysis.

Pressure gauges are provided to determine the pressure drop across each carbon bed. Taking periodic pressure readings will provide the operator with historic data for troubleshooting purposes. In the event that operating conditions change, the operator has the capability of taking corrective action.

5.6.2 VALVE OPERATION

All valves should be operated in a slow and even motion. Abrupt opening and closing of the valves can shock the system. Since complete shut-off of flow while a pump is operating could cause damage to the pump, the valves should be operated in the proper sequence in order to always maintain flow through the system. If the vessels are identified as PV1 and PV2 then the corresponding valve positions during adsorption are given as follows:

PROCESS VALVE NUMBER	SERIES PV1 TO PV2 (FIGURE 1)	PV2 SINGLE OPERATION (FIGURE 2)	SERIES PV2 TO PV1 (FIGURE 3)	PV1 SINGLE OPERATION (FIGURE 4)	PARALLEL OPERATION (FIGURE 5)
V-1	Open	Closed	Closed	Open	Open
V-2	Closed	Open	Open	Closed	Open
V-3	Open	Open	Closed	Closed	Open
V-4	Closed	Closed	Open	Open	Open
V-5	Closed	Closed	Closed	Closed	Closed
V-6	Closed	Closed	Closed	Closed	Closed
V-7	Closed	Closed	Closed	Closed	Closed
V-8	Closed	Closed	Closed	Closed	Closed
V-9	Closed	Closed	Open	Closed	Closed
V-10	Open	Closed	Closed	Closed	Closed

Refer to Section 8 for the figures referenced in this table.

Single stage operation occurs for short time periods, such as during carbon transfer or backwashing, or during other routine maintenance on one of the adsorber vessels.

NOTE: FLOW SEQUENCE CHANGES (AS DESCRIBED IN THE FOLLOWING SECTIONS) SHOULD BE PERFORMED ONLY WHEN CARBON CHANGEOUTS, BACKWASHING, OR OTHER VESSEL MAINTENANCE IS REQUIRED.

5.6.3 ADSORBER SEQUENCING: PV1 LEAD, PV2 LAG

This sequence should be used to start up the system in series mode from PV1 to PV2. Refer to Section 5.5.1 for additional details.

Starting valve position: All valves closed.

- Open valve V3
- Open valve V10
- Open valve V1

At this point, flow should be established from PV1 to PV2.

5.6.4 ADSORBER SEQUENCING: TAKING ADSORBER PV1 OFF-LINE

When adsorber PV1 is taken off-line for carbon transfer or backwashing, all of the process flow should be sent through adsorber PV2.

Starting valve position: Series flow from PV1 to PV2.

- Open valve V2
- Close valve V10
- Close valve V1

Flow should now be established through adsorber PV2 with adsorber PV1 off-line for carbon transfer or backwashing.

5.6.5 ADSORBER SEQUENCING: PV1 BACK ON-LINE AS LAG VESSEL

After adsorber PV1 is filled with fresh carbon, it should be placed on-line in the polish position, with adsorber PV2 moved to the lead position.

Starting valve position: Single stage flow to PV2.

- Open valve V9
- Open valve V4
- Close valve V3

Flow should now be established from adsorber PV2 into adsorber PV1.

5.6.6 ADSORBER SEQUENCING: TAKING ADSORBER PV2 OFF-LINE

When adsorber PV2 is taken off-line for carbon transfer or backwashing, all of the process flow should be sent through adsorber PV1.

Starting valve position: Series flow from PV2 to PV1.

- Open valve V1
- Close valve V9
- Close valve V2

Flow should now be established through adsorber PV1 with adsorber PV2 off-line for carbon transfer or backwashing.

5.6.7 ADSORBER SEQUENCING: PV2 BACK ON-LINE AS LAG VESSEL

After adsorber PV2 is filled with fresh carbon, it should be placed on-line in the polish position, with adsorber PV1 moved to the lead position.

Starting valve position: Single stage flow to PV1.

- Open valve V10
- Open valve V3
- Close valve V4

Flow should now be established from adsorber PV1 into adsorber PV2.

CALGON CARBON CORPORATION ♦ COPYRIGHT 2009 ♦ ALL RIGHTS RESERVED

5.6.8 ADSORBER SEQUENCING: PARALLEL OPERATION

The following sequence should be used to start up the system in parallel mode. Refer to Section 5.5.2 for details.

Starting valve position: All valves closed.

- Open valves V3 and V4
- Open valves V1 and V2

Flow should now be established through the system in parallel. When carbon transfer or backwashing is required, the system should be shut down until the operation is complete.

5.7 SHUTDOWN

5.7.1 SHORT TERM SHUTDOWN

For short duration shutdowns lasting less than one or two weeks, little needs to be done. Close all valves in the adsorber piping system, and open the vent line valves on each vessel. The feed pumps should be shut down and the valves closed in the lines to and from the pumps. Any drain valves in the pump casing should be opened for the duration of the shutdown. Freeze protection measures such as draining lines at the low points should be taken when there is a chance of freezing. Freeze protection measures are usually the responsibility of the client.

5.7.2 EXTENDED SHUTDOWNS

For extended shutdowns, in addition to the steps in Section 5.7.1, the adsorbers should be drained of all water.

When the adsorbers are started up again, the carbon beds may require disinfection. If disinfection is required, the procedures to disinfect a carbon bed can be found in Section 8 of this manual. Once the disinfection is complete, backwashable adsorbers should be backwashed prior to start-up.

After disinfection, bring the adsorber back on-line in the downflow mode, monitor the effluent for coliform count and monitor the pressure drop.

CALGON CARBON CORPORATION ♦ COPYRIGHT 2009 ♦ ALL RIGHTS RESERVED

5.8 TROUBLESHOOTING GUIDE

PROBLEM		PROBABLE CAUSE		REMEDY
High pressure drop across adsorber.	1.	Bed not flooded. Bed is air bound.	1.	Open vent valve or carbon inlet valve to release pressure. Add water upflow to fill vessel. Establish constant forward flow, then close valve.
	2.	High feed pump pressure.	2.	Throttle feed pump.
	5.	High suspended solids loading or carbon fines around the nozzles.	5.	Test feed for suspended solids. Install influent filter. Backwash/backflush the adsorber.
	4.	Improper valve settings.	4.	Check valve sequence.
	5.	Carbon in effluent strainer.	5.	Shut down system. Clean out retainer and effluent line. Remove carbon from adsorber. Inspect vessel using side manway and repair damaged underdrain in adsorber.
Carbon in the effluent.	1.	Internal mechanical (i.e. underdrain) failure.	1.	Determine which adsorber is causing the problem, then remove carbon and make repairs. In addition, inspect carbon retainer in effluent line and replace if necessary.
Leaking flange.	1.	Loose bolts.	1.	Tighten bolts.

CALGON CARBON CORPORATION ♦ COPYRIGHT 2009 ♦ ALL RIGHTS RESERVED

5.8 TROUBLESHOOTING GUIDE

PROBLEM		PROBABLE CAUSE		REMEDY
Excessive flow out vent line.	1.	Broken rupture disk.	1.	Check the following conditions before replacing disk: 1) Check downstream valving to make sure that the system is not plugged off. 2) Check feed pump pressure to make sure it is not too high. 3) Check process valve sequence. 4) Check that excessive pressure build-up did not occur in closed vessels during extended shutdowns. Once the potential source of overpressurization is removed, replace rupture disk.
Sudden high contaminant concentration in effluent.	1.	Carbon heel from improper transfer.	1.	Wait until contaminant flushes out. Review transfer procedures.
	2.	Leaking valve.	2.	Repair/replace valve.
	5.	Mass transfer zone has extended into effluent.	5.	Replace carbon.

5.8 TROUBLESHOOTING GUIDE

PROBLEM		PROBABLE CAUSE		REMEDY
Premature breakthrough of organics in the effluent.	1.	Influent concentration change.	1.	Confirm by analyzing effluent sample(s) before changing carbon.
	2.	Air in the influent stream.	2.	Open vent valve and fill bed upflow with water as required.
	5.	Background TOC or colloids present.	5.	Change carbon.
	4.	Leaking valves.	4.	Check operation of valves in influent and effluent lines.
	5.	Incorrect valve sequence.	5.	Sequence the flow through the system properly.
Carbon heel in empty vessel.	1.	Insufficient rinse water.	1.	Provide additional rinse water flow.
	2.	Mechanical failure.	2.	Check vessel internal parts and make repairs.
	5.	Foreign material on the carbon.	5.	Rinse vessel to remove carbon.

CALGON

CALGON CARBON CORPORATION

SECTION 6

GAC TRANSFER PROCEDURE

SECTION 6

6.0 CARBON TRANSFER PROCEDURE -- STANDARD TRAILER

The procedures that are detailed in this section of the manual are for Calgon Carbon's standard carbon trailer. Carbon may be delivered in any of two types of trailers; the standard (single compartment) trailer, or the multi compartment trailer.

The multi compartment trailer (Figure 9) is built to hold 10,000 pounds of carbon in each end section and 20,000 pounds in its center section. The multi compartment trailer arrives at the site with fresh carbon in the end sections. First, spent carbon is transferred to the center section of the trailer and then the fresh carbon is transferred from the end compartments to the adsorber.

In cold weather conditions, steam may be used to thaw the trailer and transfer lines if necessary. Contact Calgon Carbon for trailer steaming procedures if required.

6.1 SITE REQUIREMENTS

A flat paved area is needed to support the Calgon Carbon service trailer which may weigh up to 100,000 pounds. The overhead clearance required for the adsorption system is 13 to 14 feet. Diagrams of the trailers with on-board piping are shown in Figures 8 and 9.

The utility and piping requirements to connect to the adsorber and trailer are as follows:

Adsorber

Plant Air Line	3/4" Universal air connection 100 scfm at 30 psig min. (Attaches to 3/4" flush connection on carbon fill line above carbon inlet valve)
Plant Water Line	100 gpm (max) at 30 psig min. (Attach at drain connection using a 2" female Kamlock, or through backwash inlet using an 8" 150 lb. flanged connection)

Trailer (See Figure 8)

Plant Air Line	3/4" Universal air connection (for both industrial and food grade trailer) 100 scfm regulated to 15 psig max.

Plant Water Line	4" Kamlock connection (female for industrial trailer, male for food grade trailer) 100 gpm regulated to 15 psig max. (Connect to Trailer Carbon Fill or Discharge Line)

6.2 SPENT CARBON TRANSFER TO TRAILER

Spent carbon transfer from the adsorber to the trailer is accomplished by pressurizing the adsorber with plant air. When the transfer is complete, the spent carbon in the trailer is drained of water. Prior to disconnecting any lines, the air supply must be shut off, and the adsorber and all transfer lines must be vented.

6.2.1 Spent Carbon Transfer

A. Prepare for Spent Carbon Transfer:

1. Close all adsorber valves.
2. Connect the adsorber carbon outlet line to the trailer carbon fill line using 4" flexible hose.
3. Open the center manway of the trailer or trailer vent valve T1 for venting.
6. Open valve T2 in the trailer carbon fill line.
5. Check that the adsorber is full of water.
6. To aid the initial phase of transferring spent carbon, fill the transfer line with water. To do this, use a 3/4" water hose to fill the transfer line with water at the adsorber carbon outlet valve's flush-out connection.

B. Transfer Spent Carbon

1. Open the 3/4" air line valve slowly and pressurize the adsorber to 25 to 30 psig.
2. Open the 4" adsorber carbon outlet valve (V12 for adsorber PV1, V11 for adsorber PV2) and transfer the spent carbon to the trailer.
3. As the trailer starts to fill with carbon slurry, open the trailer septa valves T8, T9, and T10 to drain off excess motive water.

The transfer should take 20 to 30 minutes per 20,000 lbs of carbon. The transfer will end with a loss of pressure in the adsorber and the sound of air in the transfer line.

A small heel of carbon may remain in the adsorber. This material will have to be removed. Close the carbon outlet valve on the adsorber and add plant water to the adsorber for 2-3 minutes (through the drain connection or backwash inlet). Leave the 3/4" air line open. When the adsorber pressure reaches 25 psig, open the adsorber carbon outlet valve (V12 for adsorber PV1, V11 for adsorber PV2) and transfer the remaining amount of carbon into the trailer.

C. End Transfer

1. Close the plant air line valve.
2. Vent the tank and lines through the trailer vent valve T1.
3. Open the adsorber vent valve (V5 or V6) to further aid the venting.
6. Close the adsorber carbon outlet valve (V12 for adsorber PV1, V11 for adsorber PV2).
5. Using a 3/4" water hose at the adsorber carbon discharge line flush-out connection, flush out the transfer line for a few minutes to remove all traces of carbon. Bleed the water hose and remove it.

6.2.2 Drain Water From Trailer

A. Prepare for Draining Water

1. Close all valves on the trailer. Close the trailer manway.
2. Connect the plant air line to the 3/4" connection on trailer carbon fill line using the air line hose.
3. Connect the trailer carbon discharge/drain line to the drain line in the trench by means of a 4" flexible hose.

B. Draining Trailer

1. Pressurize the trailer to 15 psig by slowly opening plant air line valve T4 on the trailer.
2. Open 2" trailer septa valves T8, T9, and T10.

By pressurizing the trailer, water will be drained in less time than if drained by gravity.

C. End Draining

1. When the carbon is completely drained, close the air line valve T4 on the trailer.
2. Vent trailer slowly through trailer vent valve T1.
3. When venting is complete, close all valves on the trailer and disconnect all hoses.

The trailer is now full of drained spent carbon and is ready for return to Calgon Carbon for reactivation.

6.3 FRESH CARBON TRANSFER FROM TRAILER

Fresh carbon is transferred in a slurry using plant air pressure. The trailer is first filled with water to create the slurry. The carbon slurry hose on the trailer is connected to the adsorber fill line and the trailer carbon discharge line. After putting a water cushion in the adsorber, the trailer is pressurized and the carbon slurry is transferred to the empty adsorber. Prior to disconnecting any lines, the air supply must be shut off, and the trailer and all transfer lines must be vented.

Under no circumstances should the standard and triple compartment trailers be connected to a pressure source exceeding 15 psig.

6.3.1 Fill The Trailer With Water

If the carbon is wetted prior to delivery, about 4000 gallons of water will be required. If the carbon is dry, about 5000 gallons of water will be required. The trailer may be filled either upflow or downflow.

A. Filling Operation

1. Connect water line to the trailer (carbon fill line if filling downflow, carbon discharge line if filling upflow) using a 4" flexible hose.
2. Open one top manway to vent trailer during filling.
3. Open trailer vent line valve T1.
6. Open trailer water line valve (valve T2 if filling downflow, valves T8, T9, and/or T10 if filling upflow).
5. Open plant water line valve slowly and fill the trailer.

The trailer will be filled with approximately 4000 to 5000 gallons of water. The trailer filling shall be visually determined by observing the water level through the manway or by metering the desired amount.

B. End Filling Operation

1. Close plant water line valve.
2. Close trailer water line valve (T2 for downflow, T8, T9, and T10 for upflow), manways, and trailer vent valve T1.
3. Disconnect hose.

6.3.2 Transfer Carbon To Adsorber

A. Prepare for Transfer

Place about 3000 gallons of water in the adsorber. This water cushion helps to protect the underdrain system and vessel lining. If the amount of water cannot be measured, fill the vessel until water flows from the air bleed nozzle located at the point where the internal cone meets the vessel sidewall. After water flows from this point, continue to fill the vessel for several minutes to allow the water cushion to rise several inches above the internal cone.

1. Connect the adsorber fill line to the trailer carbon discharge/drain line using 4" flexible hose.
2. Connect the 3/4" plant air line to the trailer carbon fill line using the air line hose.
3. Close all valves on the adsorber.
6. Open the adsorber vent valve (V5 or V6).
5. To aid the initial phase of transferring fresh carbon, fill the transfer line with water. To do this, use a 3/4" water hose to fill the transfer line with water, at the carbon inlet valve's flush-out connection.

B. Transfer Fresh Carbon

1. Pressurize the trailer to 15 psig by slowly opening the plant air line valve and then slowly opening valve T4 in the trailer carbon fill line.
2. Open the adsorber fill line valve (V14 for adsorber PV1, V13 for adsorber PV2).

3. The Calgon Carbon trailer driver will open the trailer carbon outlet valves T5, T6, and T7 to empty the respective hoppers.
6. If a water cushion is utilized, open an adsorber drain valve shortly after starting the transfer. This is done to reduce the amount of water that overflows at the end of the transfer. The disposal of the excess motive water is provided by the customer.

C. End Transfer

1. Close the plant air valve and vent the trailer through the adsorber vent valve.
2. Close the adsorber drain valve if it was utilized during the transfer.
3. Slowly open trailer vent valve T1 for additional venting.
6. When completely vented, close the adsorber fill line valve (V14 for adsorber PV1, V13 for adsorber PV2), disconnect the hoses, and close the trailer valves.
5. Refer to Sections 3.3 and 3.6.2 for instructions on wetting and backwashing/backflushing the adsorber.
6. After the adsorber has been backwashed/backflushed, shut off the plant water and close the vent valve on the adsorber.

CALGON

CALGON CARBON CORPORATION

Section 7

CARBON GENERAL INFORMATION

SECTION 7

7.0 GENERAL INFORMATION

7.1 MAINTENANCE

As preventative maintenance, periodic inspection of the vessel internal parts should be made to ensure that the underdrain, vessel lining, and nozzles are in good condition. As a minimum, each adsorber should be inspected once per year or during carbon transfers if the on-line period exceeds one year. Any nozzles showing signs of fatigue or surface area restriction due to plugging of the nozzle slots should be replaced. Nozzles should be physically checked to ensure that they are tightly secured.

Systems with high backwash frequencies and rigorous backwash requirements should be inspected more frequently. The vessels must be fully emptied to allow inspection of the interior of the vessel. Follow the safety guidelines listed in the following sections when entering enclosed vessels. It is recommended that Calgon Carbon Field Service personnel be present during internal vessel inspections.

Pressure gauges have been installed to determine the pressure drop across each carbon bed. Taking periodic pressure readings will give the operator the capability of monitoring the pressure drop across the carbon vessels over time. If a pressure increase is observed, then corrective action can be taken before the pressure drop becomes a problem.

Differential pressure switches with indicating gauges are installed on each vessel to monitor the pressure drop across the vessel. The system should be operated to not exceed a differential pressure of 20 psi. If the differential pressure exceeds this value, the vessel should be backflushed. The backflush water flow rate should also be controlled to maintain the differential pressure at less than 20 psi.

To protect the vessel from high pressure, a safety device is provided to relieve pressure at the design rating of the vessels

In order to prevent carbon from entering the effluent stream, a carbon retainer screen is installed in the expansion joint located in the effluent line from each adsorber. In the event of an underdrain nozzle failure, the strainer will fill with carbon and the pressure drop will increase to a point where the system flow is reduced. If this should occur, the system should be operated in single vessel mode (see Figure 2 or Figure 4 in the Section 8) until the damaged underdrain in the other vessel is repaired.

7.2 SAFETY CONSIDERATIONS

7.2.1 Oxygen Demand Due To Activated Carbon

Studies have shown that low oxygen content exists in vessels containing wet drained granular activated carbon. The laboratory experiments conducted since that time also have revealed that commercial activated carbons in a wet or moist condition will lower the oxygen content of an isolated space.

Preliminary indications of this research are:

1) The phenomenon occurs with all types of wet activated carbon.
2) The rate of oxygen uptake naturally varies with the degree of exposure of the wet carbon to the air. Thus, it is relatively rapid in a drained bed.
3) There is some indication of a limit to the carbon's capacity for oxygen, but until more is known, it would be prudent to assume that all carbons (fresh, used, reactivated) will also exhibit this characteristic. Similarly, although these tests were run with water, it should be assumed that the phenomenon will occur in other liquid and vapor systems.

Based on the properties of wet activated carbon, a confined space entry procedure should be established for any facility using carbon in confined vessels.

All confined spaces, including those containing activated carbon, should be presumed to be hazardous. Appropriate safety measures should always be taken before entering, as well as when workers are in a confined space. OSHA regulations applicable to respiratory protection in oxygen deficient atmospheres should be strictly adhered to.

CALGON CARBON CORPORATION ♦ COPYRIGHT 2009 ♦ ALL RIGHTS RESERVED

7.2.2 Emergency Procedures

In the event a malfunction which causes a shutdown of an adsorber should occur, the flow can either be switched to the second adsorber in the system or the flow can be stopped.

If a major leak or similar problem develops, flow to the adsorber should be stopped immediately and steps taken to correct the problem. Proper safety procedures should be observed at all times to prevent damage to the equipment or injury to personnel.

7.2.3 Pressure Relief Warning

⚠ WARNING

TO AVOID VESSEL DAMAGE AND ENDANGERMENT OF OPERATING PERSONNEL, DO NOT BLOCK THE PRESSURE RELIEF DEVICE FROM VENTING TO ATMOSPHERE.

7.3 RECORD KEEPING

Normally, operating data is taken for: 1) flow rates, 2) which beds are in service, 3) pressure drop across each unit, and 4) necessary analytical work for Influent and effluent to each adsorber. This may include: pH, TOC level, BOD, COD, toxicity, organic contaminant levels, and inorganic levels.

CALGON

CALGON CARBON CORPORATION

Section 8

ACTIVATED CARBON / ADSORPTION INFORMATION

SECTION 8

8.0 ACTIVATED CARBON / ADSORPTION INFORMATION

8.1 ADSORPTION

There are two types of adsorption: chemical and physical.

Chemical adsorption is a chemical reaction between a molecule in a solution or vapor with the surface of an adsorbent such as activated carbon. The chemical reaction is usually irreversible. An example of chemical adsorption is chlorine removal from water. The chemical reaction of chlorine with carbon and water forms Cl- and CO3= ions.

Physical adsorption is usually explained in terms of surface structure (or energy per unit volume) of the solid. While molecules in the interior of any solid material are subject to equal forces in all directions, the molecules on the material's surface are subjected to unbalanced forces. This results in an imbalance with inward forces toward the solids. Molecules that are either gaseous or liquid then become attracted (adsorbed) to the solid's surface.

The attractive forces, known as London Dispersion Forces, are the same forces responsible for surface tension and condensation of vapors to liquid. These forces are a type of Van der Waals force and range from very weak to moderately strong. Physical adsorption is reversible and changing the process variables in a system can cause molecules to be desorbed.

An important aspect to any adsorbent is the amount of pore volume it contains per unit volume or per net weight. Examples of adsorbents are activated carbon, silica gel, activated gel, alumina, and zeolite.

8.2 ACTIVATED CARBON AND HOW IT WORKS

Any organic material with high carbon content (coal, wood, peat, coconut shells, etc.) can be used as the raw material for making activated carbons of various activities and properties. When making high quality granular activated carbon from coal, the raw material is ground and a binder is added to give the end product suitable hardness. The mixture is then re-compacted and crushed to give it the desired particle size. The carbon is then activated by thermally decomposing and removing carbon from the

structure in a reducing atmosphere at about 1800°F. Furnace temperature and the furnace atmosphere are controlled to produce the desired adsorption properties in the product.

The resultant product has an incredibly large internal pore volume per unit particle volume and a network of submicroscopic pores where the adsorption takes place. About 40% of the particle volume is used to contain adsorbates. One pound of activated carbon contains an effective total area of over 100 acres.

Activated carbon normally removes adsorbates (contaminants or desired products) from a solution (solute) through physical adsorption. The adsorbate would have to differ from the solute. For example, in aqueous solutions the solute should be more neutral or non-polar and have a higher molecular weight.

Many factors affect carbon adsorption in liquids, such as pH, flow rate, temperature, solubility, concentration of adsorbate, type and number of different adsorbates, viscosity, and the level of adsorbate removal required.

In any stream, there are four steps that occur in order for adsorption to take place. First, the adsorbate molecule must migrate through the bulk of solution toward the carbon particle. This is known as bulk diffusion. Second, the adsorbate penetrates the surface film to reach the exterior surface of the carbon. This is known as film diffusion. Third, the adsorbate diffuses through the transport or large pores. This is known as pore diffusion. Fourth, the adsorbate is adsorbed deep into the micropore structure of the activated carbon. In most water applications, the rate limiting step is the pore diffusion step.

In a typical fixed bed carbon system, the liquid flows down through an adsorber. Initially, the adsorbate is adsorbed onto the top most portion of the carbon. The rate of adsorption will determine the depth of carbon (mass transfer zone) that is utilized to remove the adsorbates. The varying concentration in the mass transfer zone is known as the wavefront.

Eventually, the wavefront moves through the bed and contamination breaks through into the effluent from the bed. This is known as the breakpoint. In a single or parallel adsorber system, the contaminants are usually monitored until the effluent approaches the allowable limit. The adsorber is then taken off-line and the spent carbon is removed. The adsorber is then refilled with fresh carbon and brought back on-line. In a series mode, the mass transfer zone in the first or lead bed is allowed to pass through the adsorber into the second bed. Usually, when adsorbing multiple components, the first two or three compounds that are being monitored in the effluent from the lead bed are allowed to approach their influent levels, at which point the adsorber is taken off-line.

8.3 FACTORS AFFECTING ADSORPTION

Concentration: With each adsorbate, a high concentration will result in a higher adsorption capacity for that adsorbate on the carbon. For example, if an adsorbate has a one percent loading at 1 mg/l, it might have a three percent loading at 10 mg/l. However, the volume of carbon required to treat a fixed volume of solution will go up if the concentration goes up.

When the concentration of the feedstream changes dramatically, such as when a spill occurs upstream of a potable water plant intake, undesirable effects may occur. Concentrations at the intake of the plant may go up 100 to 1000 times the normal influent concentration. The activated carbon would adsorb the contamination with a higher capacity, if adsorptive capacity was available.

However, upon passage of the spill past the intake, the activated carbon may desorb some of the high level contamination to fresh carbon downstream of the mass transfer zone or into the effluent. When upsets occur, a conservative approximation is to assume that additional carbon is exhausted by the excess contaminant at the original loading rate for the normal influent level.

Another example is when the contaminant concentration in the influent decreases for a period of time. In this instance the adsorbate will start to desorb. The rate of desorption is slower than the rate of adsorption. Therefore, a conservative estimate of the overall effect is that a fixed volume at the reduced influent level will exhaust as much carbon as if the influent concentration was consistently high.

A steady feed concentration will help minimize the amount of carbon that is used in an application. A steady feed would usually be considered to be +/-25% of the average concentration. However, the carbon bed will act to average out upsets and variations, except when the bed is nearly exhausted.

Flow Rate: In many applications, the flow rate to the adsorber is varied because the flow demand changes. As the flow changes, so does the mass transfer zone (MTZ). These changes are approximated by a directly proportional relationship between MTZ length and flow rate. For example, if the MTZ is 1 foot at 250 gpm, it would be 2 feet at 500 gpm. If the flow rate is increased dramatically, the MTZ is further lengthened because some desorption may take place, resulting in less efficient operation. For the optimum carbon usage, the flow rate should be steady (if possible).

In a series configuration, increasing the flow rate usually has a minimal impact. In a parallel mode, this impact is more substantial since the carbon is usually taken off line on the basis of the effluent quality. since the MTZ is lengthened the on-stream time will be shortened.

CALGON CARBON CORPORATION ♦ COPYRIGHT 2009 ♦ ALL RIGHTS RESERVED

Viscosity: As viscosity increases in a system, the time to adsorb lengthens, and thus the MTZ lengthens. In a process application the temperature of the feedstream may be raised to offset increases in viscosity, but if the temperature is raised too high degradation of product may occur or the adsorption capacity of the carbon may be reduced. In water applications, viscosity has minimal impact because it is relatively low.

Temperature: In liquid phase systems, the adsorptive capacity is usually lowered at higher temperatures because the solubility is increased.

Feedstream pH: The pH of the feedstream can impact adsorption efficiency. This impact may be substantial since the pH affects the ionization of the adsorbate. Usually, the more ionic adsorbates have less adsorption capacity. Therefore, organic acids adsorb better at lower pH levels, while organic bases adsorb better at higher pH levels.

Water Characteristics: On each start-up of fresh carbon, the pH of the effluent stream may rise. This occurs because species like sulfates, nitrates and chlorine adsorb and displace alkaline species. The pH will return to normal, depending on water characteristics, after 250 to 350 bed volumes have been treated. If this is a problem, then either acid should be added to the effluent, or the carbon should be allowed to stand in a sodium sulfate solution for 10 to 12 hours.

The carbon has a capacity for sodium sulfate of 1% by weight. Therefore, the water in contact with the carbon should contain a quantity of sodium sulfate at least equal to 2% by weight of the carbon. In a 20,000 pound adsorber this would be 400 pounds of Na2SO4 in 5,000 gallons of water.

Solubility: The water solubility of a particular compound is a very good indicator of its adsorptivity. Generally, the more soluble a compound is, the more difficult it is to be adsorbed. Also, a more water soluble compound has a longer MTZ.

Suspended Solids: Suspended solids should usually be taken out of the feedstream before the carbon adsorbers. Suspended solids (>10 microns) will usually be filtered out within the first 6" of carbon and the pressure drop across the carbon will increase. If the pressure drop increases too much, the unit should be backwashed or backflushed. Normally, feed streams containing suspended solids of more than 50 ppm are pre-filtered.

If the suspended solids are finer than 10 microns, the solids will usually not be filtered out by the carbon. The solids would then pass through the carbon into the effluent. This condition is very undesirable because the solids often contain dissolved or attached adsorbate and premature breakthrough can appear to occur. For materials to adsorb they must be in solution, so they can diffuse into the pore structure.

Immiscible Oils and Greases: Immiscible oils and greases have to be separated from the feedstream before the carbon adsorbers. If they are not removed, they may coat the carbon particles with a fine film. The adsorbates will not be able to pass through this film, and the carbon will not be effectively utilized. Oils and grease can also behave as a suspended, immiscible solid.

Heat of Adsorption: Heat is often given off when molecules are adsorbed. The amount of heat is conservatively estimated at two (2) times the heat of vaporization. In a process stream where the solvent is an organic liquid, a heat-up potential exists if the carbon has not been previously wetted and deaerated properly. Refer to Section 3.3 of this manual for wetting procedures.

Water has too low a heat of adsorption to cause a problem for aqueous solutions.

Competitive Adsorption: In most carbon applications (process, wastewater, groundwater, and potable water), more than one adsorbing compound is in the feedstream. Some of these compounds must be adsorbed while others may be permitted to pass through the carbon bed.

Unfortunately, the activated carbon cannot tell which of the molecules must be adsorbed. All of the components in the feedstream will compete for adsorption space, making the removal of target components less efficient. Therefore, competitive adsorption can cause premature breakthrough of the target component.

8.4 ADDITIONAL ADSORPTION THEORY

Desorption/Displacement: Desorption is the opposite of adsorption and may occur for many reasons. Changes in the feedstream components, temperature, pH, and feedstream concentration may promote desorption. In order to minimize desorption and optimize carbon usage, the feedstream should be stable (if possible). The rate at which desorption takes place is usually much slower than the adsorption rate.

If a more strongly adsorbed organic enters the feed it will desorb the target adsorbate. This forces the target adsorbate to re-adsorb deeper in the carbon bed, and eventually breakthrough will occur.

Roll-Over in Competitive Adsorption: When an adsorber system runs beyond breakthrough, the more weakly adsorbed components originally in the feedstream can be desorbed into the effluent. The resulting concentrations may exceed the inlet concentrations. This phenomenon is known as roll-over. In a properly operated column system, roll-over of key components will not be observed in the effluent.

Effect of Bacteria: Higher pressure drops can be a result of bacteria growth in some wastewater applications. This is due to bacteria slime and exhaust gasses from the bacteria. If backwashing does not get rid of the pressure drop problem, then either NaOH washing or higher temperatures will control bacteria growth. Usually, sodium hydroxide washing is used in lined vessels. Do not use biocides, chlorine, or other additives, since they will adsorb and reduce carbon life without affecting the bacteria.

Refer to Section 8 for sodium hydroxide washing procedures.

8.5 GLOSSARY

The following terms are commonly used to describe adsorption theory, activated carbon, and adsorption systems.

ABRASION NUMBER -- A test performed on a particulate material to define the resistance of the particles to degrade on handling. It is calculated by contacting a sample with steel balls in a Ro-Tap machine and determining the ratio of the final to the original mean particle diameter.

ACTIVATED CARBON -- A carbonaceous material that is a crude form of graphite with a random and amorphous structure. The structure is highly porous, over a broad range of pore sizes, from visible to molecular cracks and crevices.

ACID WASHED ACTIVATED CARBON -- Activated carbon which has been washed with an acid solution for the purpose of dissolving the iron from the carbon. Acid washed carbons are usually used in systems/processes operating at low pH.

ADSORBATE -- Any substance that is or can be adsorbed on the adsorbent.

ADSORBENT -- Any solid having the ability to concentrate significant quantities of other substances on its surface. Activated carbon is an adsorbent.

ADSORBER -- A vessel designed to hold granular activated carbon.

ADSORPTION -- A phenomenon where an adsorbate is physically attracted to the surface of the adsorbent.

ADSORPTION ISOTHERM -- A graphic depiction of the capacity of an adsorbent to adsorb a specific adsorbate. The measurements of capacity are performed at constant temperature using either varying amounts of the adsorbate or adsorbent.

ADSORPTION PORES -- The finest pores in the carbon structure. Pores which have adsorption capacity.

AGGLOMERATED -- Material that has formed into a solid mass.

AIR SCOURING -- A process that uses pressurized air to break-up any agglomerations in a carbon bed. Air is blown into the bottom of the bed before the bed is backwashed. Air scouring capability must be incorporated into the system design during the design phase.

APPARENT DENSITY -- A physical property that is defined as the mass per unit volume of a granular material under specified conditions. The apparent density includes the carbon skeleton volume plus the pore and void volumes.

ASH -- The noncombustible mineral matter that is contained in activated carbon and is the residue that remains after the combustion of a carbonaceous material. The measurement of ash is performed under specified conditions and is normally defined on a weight percent basis.

BACKWASH -- An operating method used to remove suspended solids from a carbon bed. Water is pumped into the bottom of the adsorber, flows upward through the carbon bed, and exits through the backwash outlet. The upward flow expands the bed and removes carbon fines, entrained air and suspended solids. The percent bed expansion (up to 50%) and time required for backwashing are a function of the backwash rate and water temperature.

BACKFLUSH -- A process similar to backwashing, but the flow rate is not high enough to expand the bed more than five percent.

CARBON HEEL -- Any quantity of spent carbon not removed from an adsorber before recharging the vessel with fresh carbon.

CARBON TETRACHLORIDE ACTIVITY -- A measurement of the increase in weight of a sample of activated carbon after air saturated with carbon tetrachloride is passed through the sample. The test is performed at a given temperature and the results are reported as weight percent.

CARBON TRAILER -- A bulk trailer used to transport 20,000 pound (or less) loads of granular carbon to/from the customer's plant site.

CALGON CARBON CORPORATION ♦ COPYRIGHT 2009 ♦ ALL RIGHTS RESERVED

CHEMISORPTION -- A chemical process that binds an adsorbate to the surface of an adsorbent by forces whose energy levels approximate those of a chemical bond.

COLOR BODIES -- Complex molecules which impart color (usually undesirable) to a solution. Carbon adsorption is often used for color removal applications.

COUNTER-CURRENT OPERATION -- A mode of operation where the flow of liquid is opposite the movement of the adsorbent. This method of operation produces the lowest carbon usage rate or highest efficiency.

CRITICAL BED DEPTH -- The distance between the fresh carbon and the spent carbon for a bed of activated carbon. In other words, it is the portion of the bed which is partially spent and the zone where adsorption takes place. The critical bed depth is measured in feet. For a single column system, this is the amount of carbon that is not completely utilized when the effluent objective is reached and the carbon is taken off-stream.

DEAERATION (WETTING) -- The process of removing air (gases) from a carbon bed and the carbon pores. The volume of air in activated carbon is in the void space and pore volume, which typically accounts for 80% of the total volume in a carbon bed (the carbon skeleton accounts for the other 20%).

DESORPTION -- The opposite of adsorption. A phenomenon where an adsorbed substance leaves the surface of the adsorbent.

EDUCTOR -- A device to motivate a slurry of activated carbon and water slurry through hoses and pipes. An eductor has no moving parts and utilizes pressurized water as the motive force.

FRESH CARBON--New carbon that is placed into an adsorber. Fresh carbon can be either virgin carbon or newly reactivated carbon.

HARDNESS NUMBER -- A measurement of the resistance of a granular carbon to the degradation action of steel balls in a Ro-Tap machine. This number is calculated by using the weight of granular carbon retained on a particular sieve after the carbon has been in vigorous contact with the steel balls.

HEAT OF ADSORPTION -- The heat given off when molecules are adsorbed.

IODINE NUMBER -- The measurement of the amount of iodine adsorbed by one gram of carbon. The concentration of iodine is 0.02N. The iodine number is reported as milligrams of iodine.

LAG ADSORBER -- The second bed of carbon through which the liquid passes in a series operated adsorption system. The lag vessel contains carbon that is partially spent when the carbon in the lead adsorber is completely spent.

CALGON CARBON CORPORATION ♦ COPYRIGHT 2009 ♦ ALL RIGHTS RESERVED

LEAD ADSORBER -- The first bed of carbon through which the liquid passes in a series operated adsorption system. The lead vessel contains carbon that is the first to become spent.

MASS TRANSFER ZONE -- The adsorption gradient that exists in the carbon bed. It corresponds to the gradual transition of the carbon from spent to fresh.

MESH SIZE -- The measurement of the particle size of granular activated carbons determined by the U.S. Sieve Series. Particle size distribution within a mesh series is typically given in the specification of the particular Calgon Carbon carbon.

MOLASSES NUMBER -- A ratio of the optical densities of a molasses solution treated with a standard activated carbon compared to a molasses solution treated with the activated carbon in question.

MOISTURE -- The measurement of the amount of water adsorbed on activated carbon. Moisture is reported as percent. For Calgon Carbon's coal based products the moisture specification is less than 2% as packed.

PARALLEL FLOW -- The mode of operation when two or more adsorbers are operated so that the influent flow is distributed equally to each adsorber.

PARTICLE DENSITY -- A measurement of the weight per unit volume of granular activated carbon as determined by the displacement of mercury. Particle density is typically reported as g/cc. The particle density includes the carbon skeleton volume plus the pore volume.

POLISH ADSORBER -- See Lag Adsorber.

PORE VOLUME -- A measurement of the volume of pores in a unit weight of carbon. The pore volume is determined by obtaining the difference in the volumetric displacement of carbon in mercury and helium at standard conditions.

PRESSURE RELIEF DEVICE -- A device such as a rupture disk or a pressure relief valve which prevents a vessel from exceeding its design pressure.

REAL DENSITY -- A measurement of the weight per unit volume of the skeleton only of a carbon granule. This measurement excludes the pore volume and the inter-particle void space. This property is determined by helium displacement and is approximately 2.1 g/cc for coal-based carbons.

REACTIVATED CARBON (REACT CARBON) -- Granular carbon that has been thermally reactivated for re-use as fresh carbon in adsorption systems.

REACTIVATION -- A process to remove adsorbates from spent granular activated carbons using vaporization and oxidation at temperatures greater than 1000NF. Reactivated carbon can be reused. Depending on the application the performance of the reactivated

carbon can be less than, equal to, or better than virgin carbon. This is a type of carbon regeneration.

SERIES FLOW (LEAD-LAG OPERATION) -- A mode of operation where two or more adsorbers are operated so that each adsorber treats the entire influent flow, one after the other. When the carbon in the lead bed is spent, the carbon is replaced with fresh carbon and this adsorber is placed in the lag (polish) position.

SPECIFIC HEAT -- A physical property that is defined as the ratio of the quantity of heat required to raise the temperature of a compound through a particular temperature interval compared to the corresponding heat quantity for water. For Calgon Carbon carbons this value is approximately 0.20 cal/g/°C at temperatures less than 200°C.

SPENT CARBON -- Carbon that has adsorbed organic contaminants and must be removed from the system so that the effluent quality specifications are not exceeded.

SURFACE AREA -- A measurement of the total surface area available for adsorption inside the pores of activated carbon. Surface area is determined by the Brunauer, Emmett, and Teller method (BET Method), which uses the adsorption of nitrogen at liquid nitrogen temperature. Surface area is usually expressed in square meters per gram of carbon. The surface area of Calgon Carbon carbons ranges from 700 to 1200 square meters per gram.

TRANSFER TANK -- A storage tank designed to hold a charge of spent carbon. The purpose of the tank is to save on freight as only one truck is needed to deliver fresh carbon and return the spent carbon for reactivation.

TRANSPORT PORES -- Pores larger than the largest adsorption pores. These pores function as a diffusion path to transport adsorbates. Adsorption does not occur in these pores even at saturated conditions.

UNDERDRAIN -- A device located inside the adsorber to collect the fluid being treated. The underdrain permits the fluid to flow into the piping network while retaining the granular carbon in the vessel**.**

VENT -- A pipe line from an adsorber or transfer tank to an unrestricted sewer or the atmosphere.

VIRGIN CARBON -- Fresh granular activated carbon that has not been used.

VOIDS -- The space (volume) between the carbon granules. For Calgon Carbon carbons the typical range is 37% to 43% by volume.

WATER CUSHION -- The water added to an adsorber or transfer tank before charging the vessel with carbon. This is done to protect the underdrain, nozzles and lining.

WAVE FRONT -- See Mass Transfer Zone

CALGON

CALGON CARBON CORPORATION

Section 9

OPERATING INFORMATION

SECTION 9

OPERATING INFORMATION

FIGURE 1 VESSEL PV-1 TO PV-2 SERIES FLOW

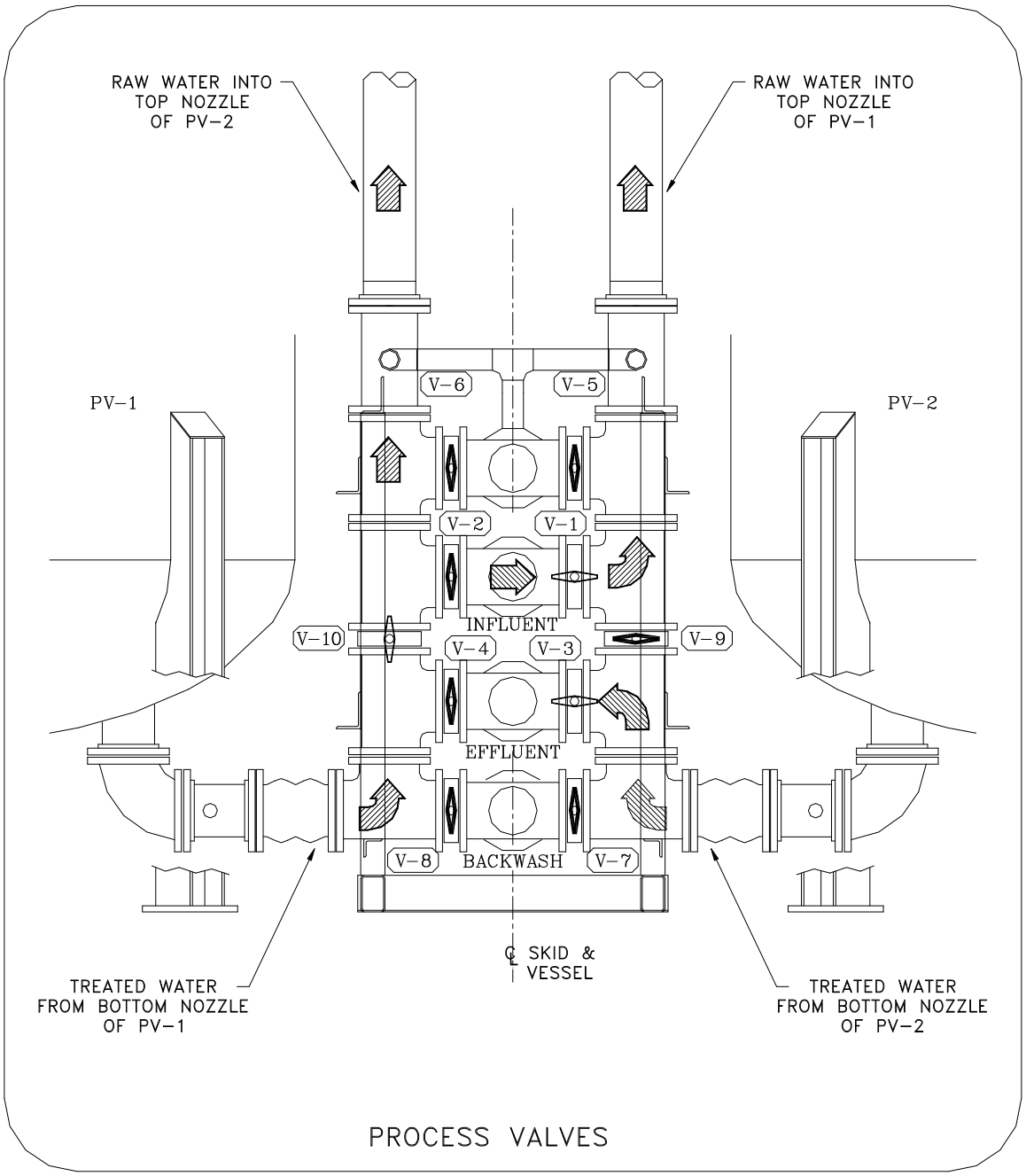

FIGURE 2 VESSEL PV-2 ON-LINE VESSEL PV-1 CARBON TRANSFER

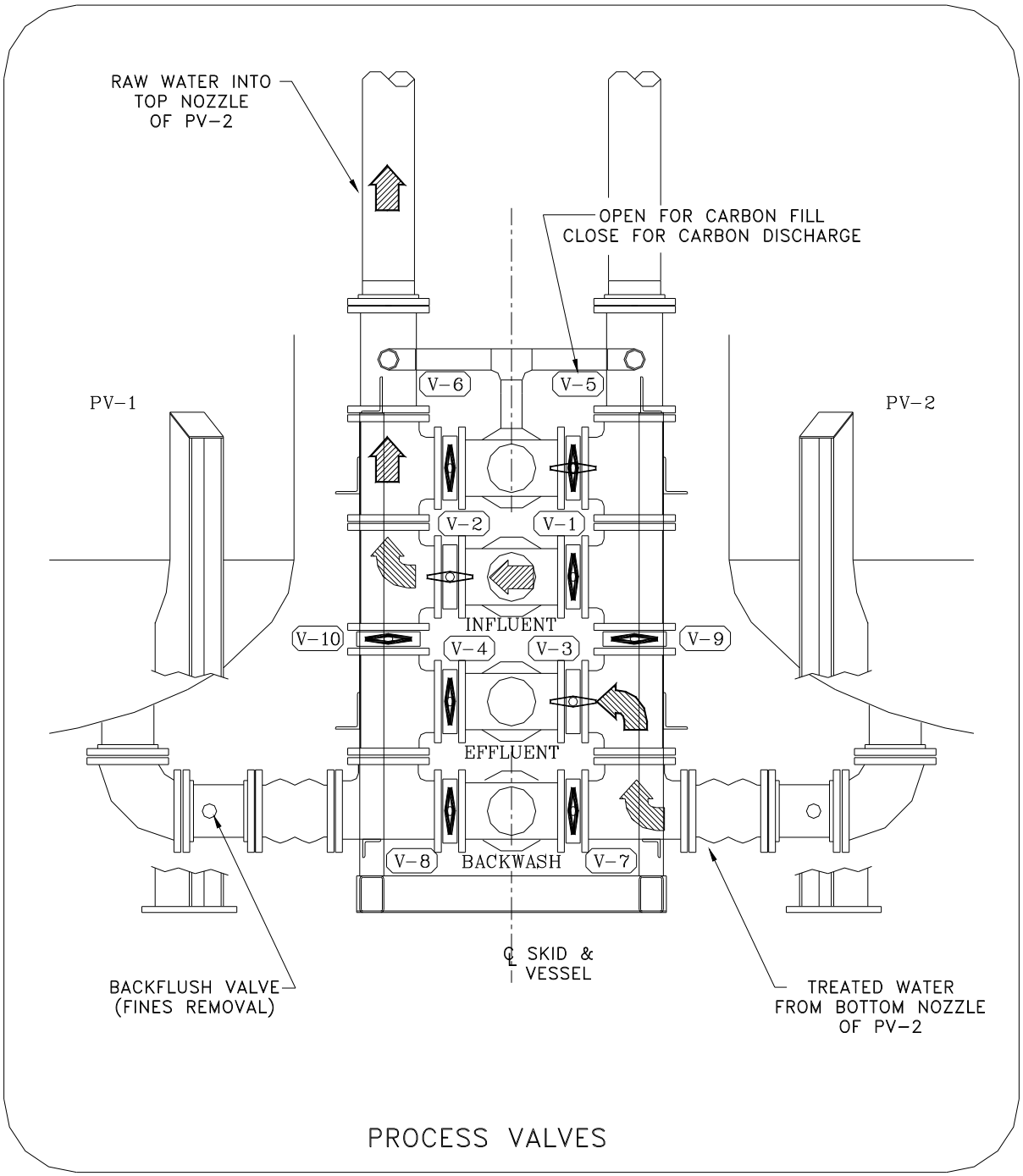

FIGURE 3 SERIES FLOW VESSEL PV-2 TO PV-1

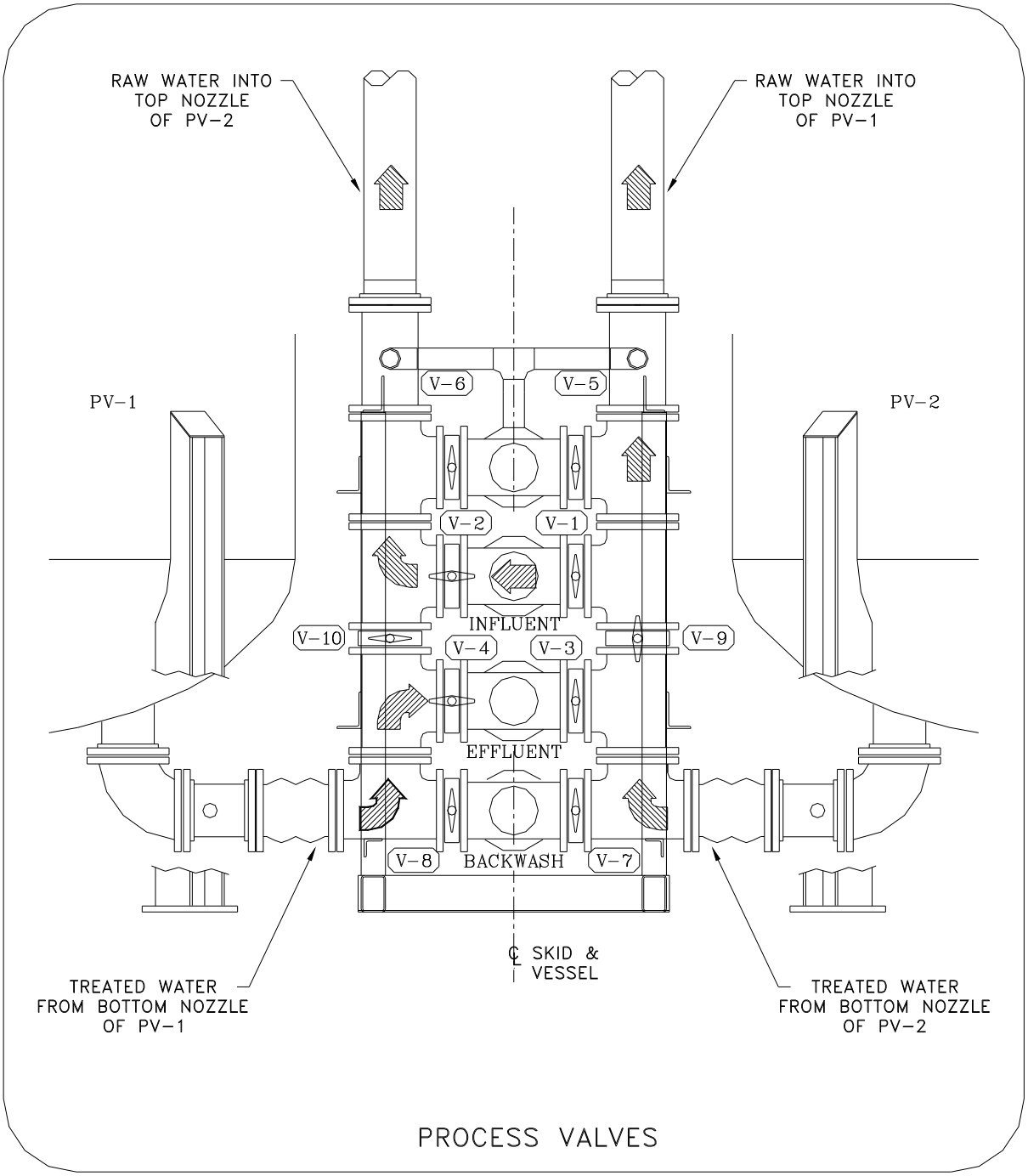

FIGURE 4 VESSEL PV-1 ON-LINE VESSEL PV-2 CARBON TRANSFER

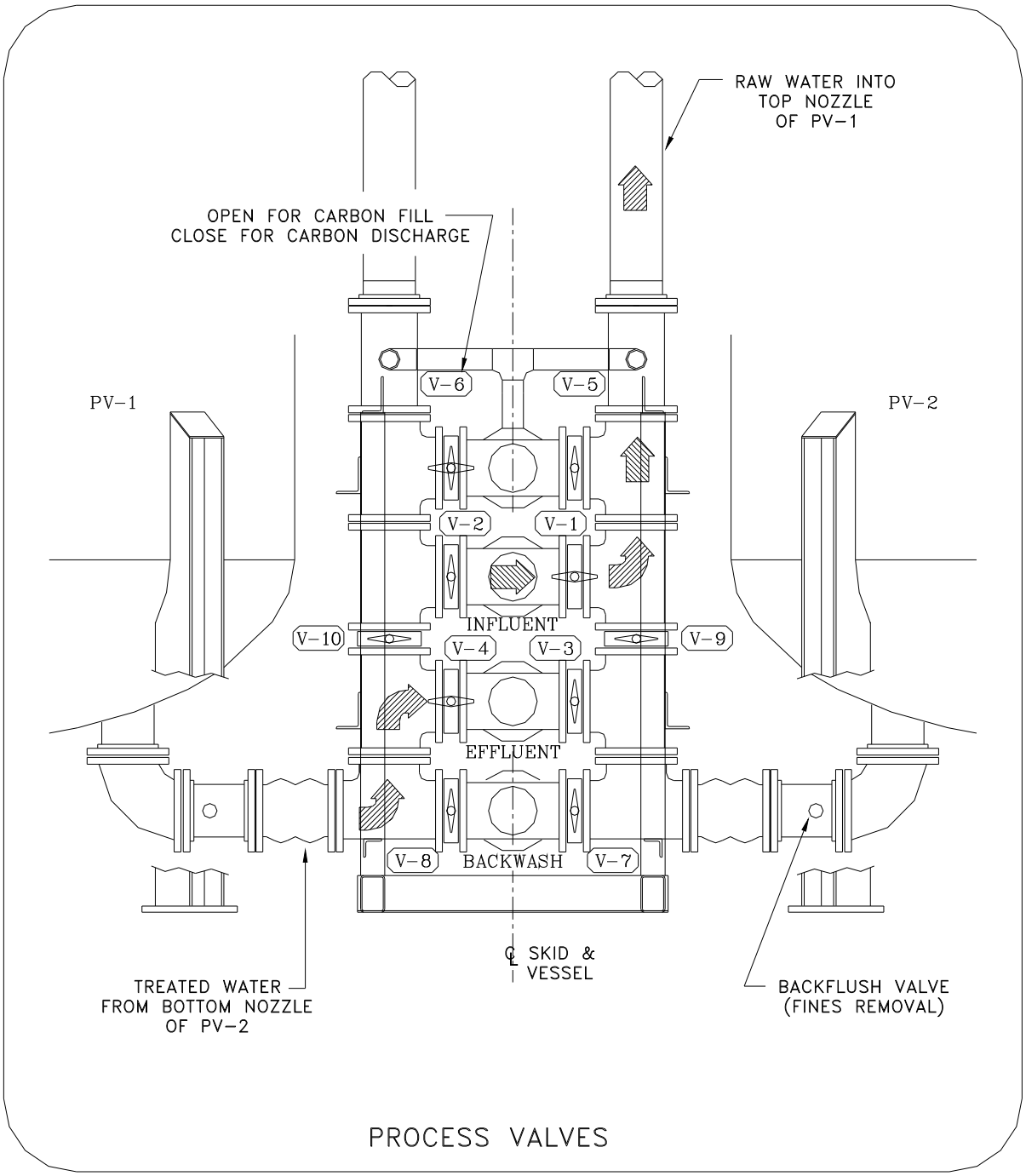

FIGURE 5 PARALLEL FLOW VESSEL PV-1 AND PV-2

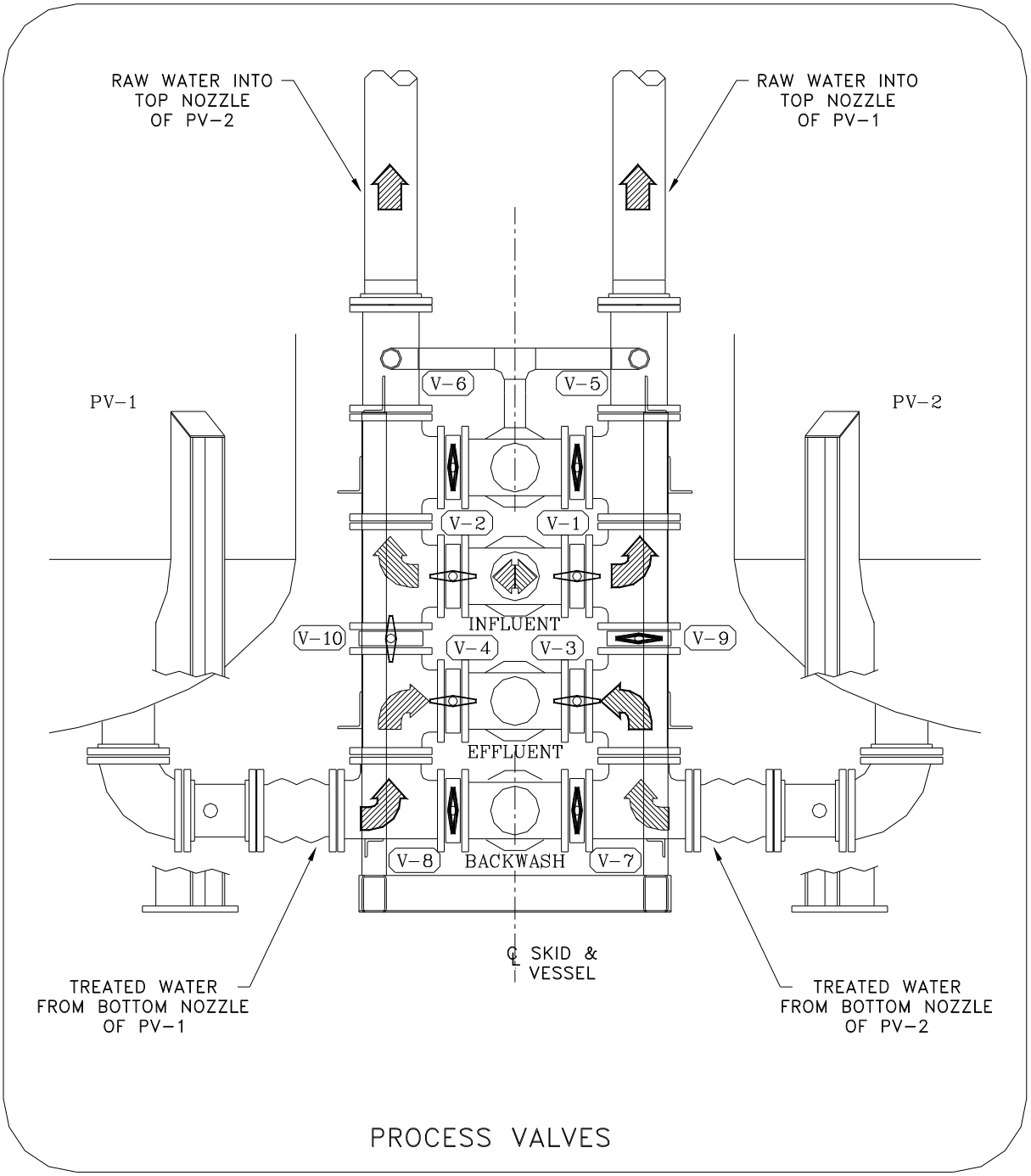

FIGURE 6 VESSEL PV-2 ON-LINE VESSEL PV-1 BACKWASHING

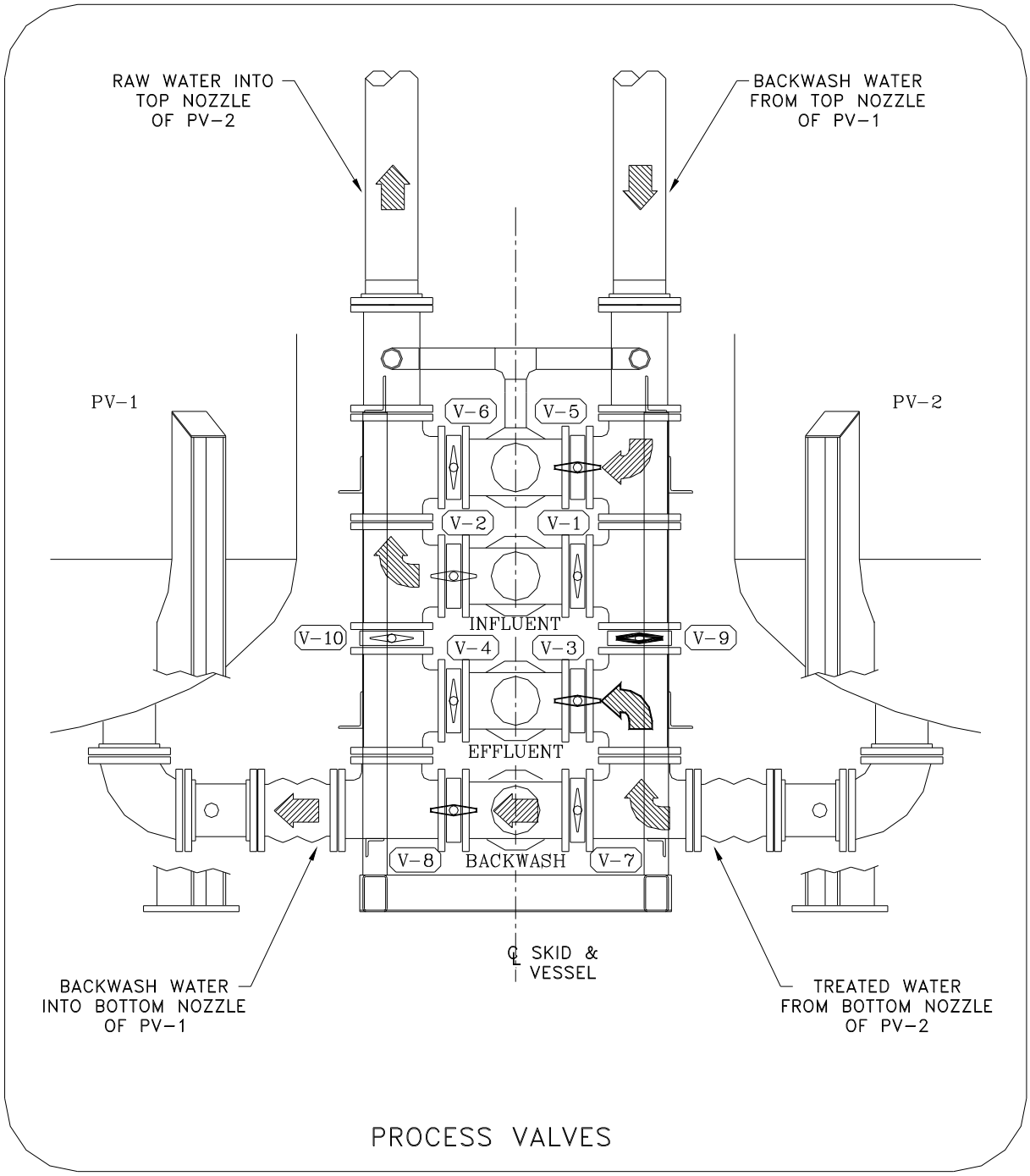

FIGURE 7 VESSEL PV-1 ON-LINE VESSEL PV-2 BACKWASHING

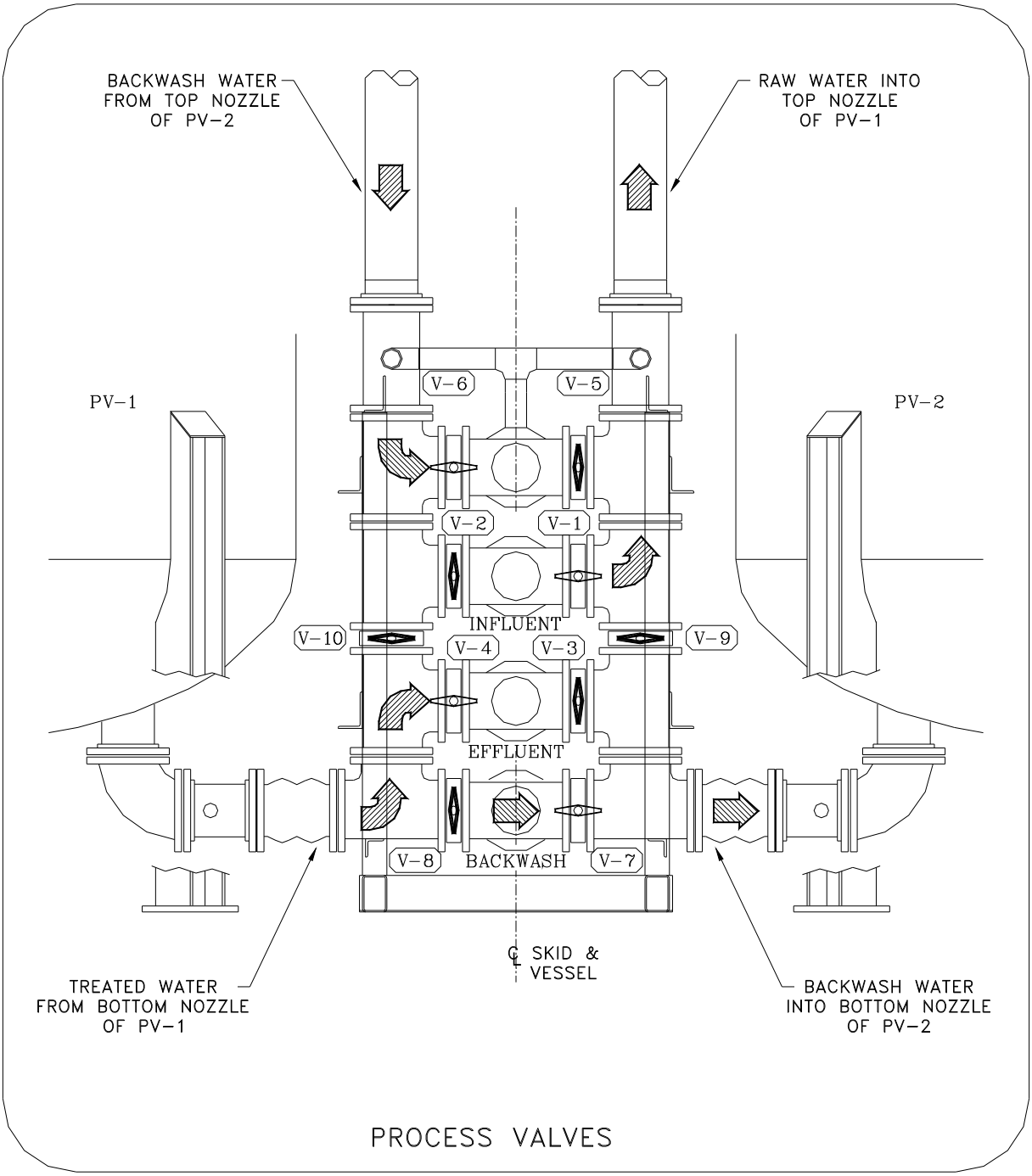

FIGURE 8 STANDARD TRAILER

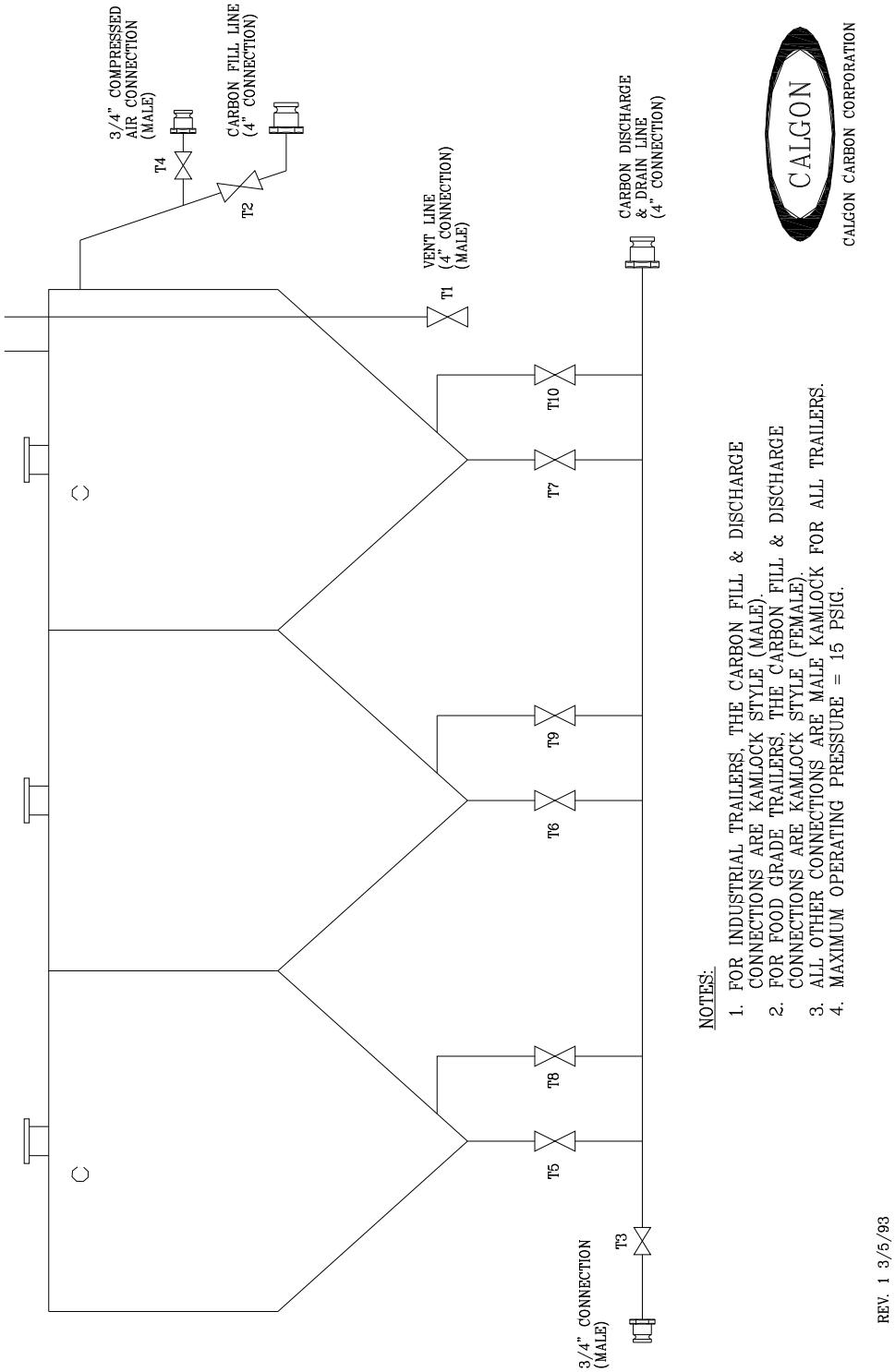

FIGURE 9 TRIPLE COMPARTMENT TRAILER

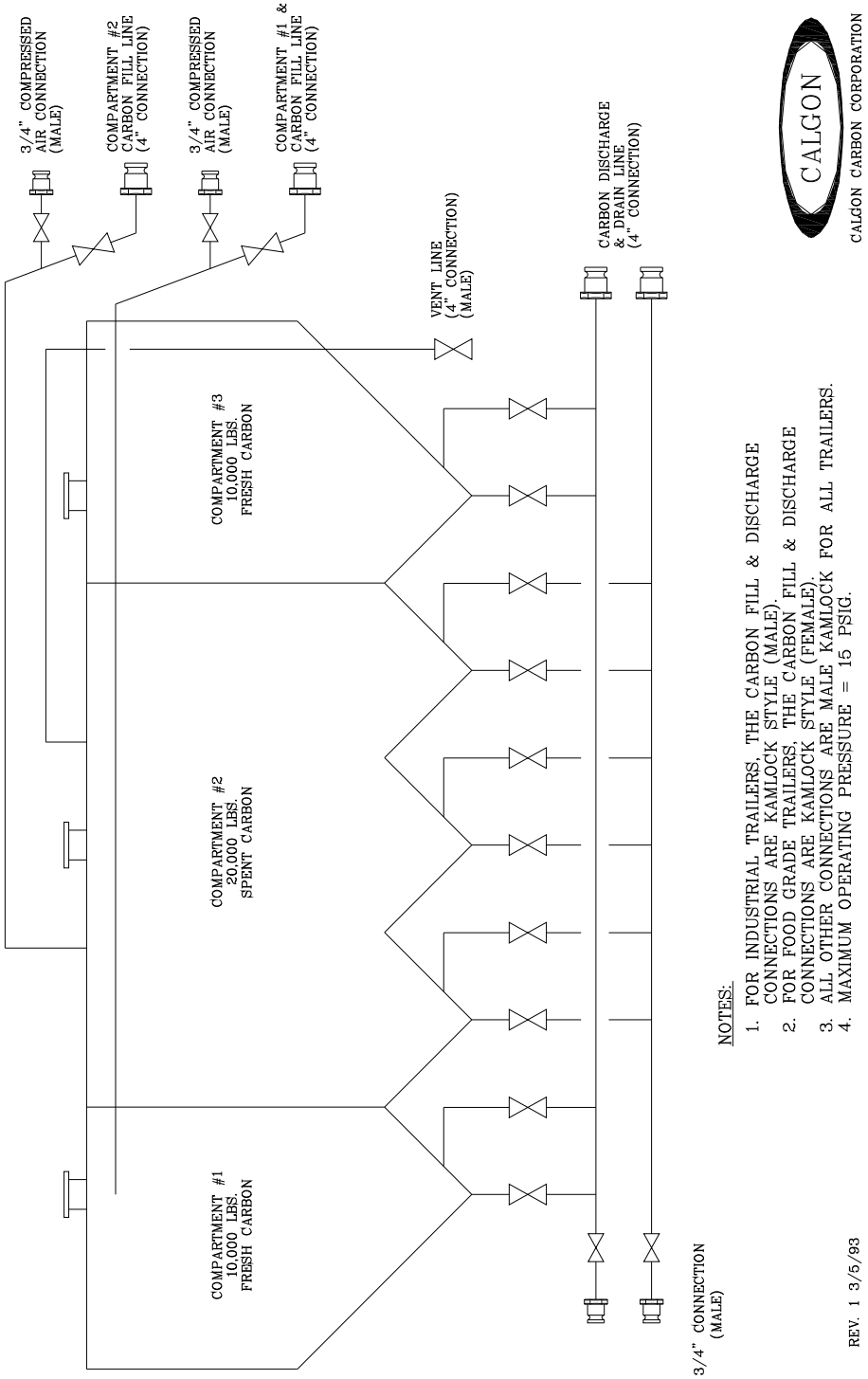

CARBON ACCEPTANCE CANISTER (CAC) INSTRUCTIONS

1. Connect the carbon acceptance canister (CAC) as shown on the drawing below. Start the adsorption system according to the operating manual. All valves in the influent and effluent lines to the CAC should be closed.

2. Open the top 2" plug on the CAC. Slowly fill the CAC with clean, hot water. If hot water is not available, ambient temperature water will be acceptable. Capacity of the CAC is approximately one (1) gallon.

3. For optimum performance, the water needs to be adsorbed into the carbon. To achieve this, allow the CAC to stand full with water for approximately 24 hours. After the water has been adsorbed, replace the plug in the top of the CAC.

4. Open both valves in the CAC effluent line. One valve, C-3, is located near the adsorption system's main effluent header and the other valve, C-4, is located near the CAC.

5. Disconnect the tubing on the CAC influent line at the isolation valve C-1 located on the system's main influent header.

6. Slowly open the CAC influent valve, C-2, to allow clean effluent water to back flow through the CAC to purge the lines and backflush the CAC. Allow about 5 gallons of clean water to flow through the CAC.

7. Close the valve, C-2, in the CAC influent line to stop the flow. Reconnect the tubing to the CAC influent isolation valve, C-1.

8. Slowly open both of the valves in the CAC influent line to allow untreated water to flow through the CAC.

9. If the carbon adsorption system is to be backwashed or shutdown, close the influent valve, C-2, and the effluent valve, C-3, on the CAC, and open the top plug in the canister to vent the CAC. Once the adsorption system is placed back into service, tighten the plug and open the CAC influent and effluent valves.

10. The CAC should be left in service according to the following guidelines:

    a. If the adsorption system is operating in parallel mode, the CAC should be left on-line for about 1/10 th of the anticipated bed life.
    b. If the adsorption system is operating is series mode, the CAC should be left on-line for about 1/5 th of the anticipated bed life.

11. After the CAC has been on-line for the recommended time period, it needs to be returned for carbon acceptance testing. The CAC is taken out of service by closing all of the valves in both the CAC influent and effluent lines. After the valves are closed, disconnect the effluent tubing connector at the CAC. Open the top plug to vent the CAC. Slowly open the CAC effluent valve, C-3, and drain the water from the CAC to a suitable container. Ensure that all necessary safety precautions are taken depending on the hazardous nature of the process liquid. Open the CAC influent valve C-2 and carefully disconnect the tubing from the influent isolation valve, C-1, on the system header. Allow the liquid in the influent tubing to drain through the CAC and into the container.

CALGON CARBON CORPORATION ♦ COPYRIGHT 2009 ♦ ALL RIGHTS RESERVED

12. Close the CAC influent valve C-2 and effluent valve C-3. Replace the top plug and remove the CAC from the adsorption system. Ship the CAC with the influent and effluent valves attached and closed. This is required to ensure that no water leaks from the CAC during shipment.

Ship the CAC to: Calgon Carbon Corporation
500 Calgon Carbon Drive
Pittsburgh, PA 15205
Attention: Carbon Acceptance

Contact the Calgon Carbon Sales Office in your area for additional information.

UNIT SPECIFICATIONS

Max. Operating Pressure:	125 psig
Body and Septa:	PVC
Valves	PPL
Tubing	PPL
Flow Control Valve	Nickel Plated Brass

CARBON ACCEPTANCE CANISTER

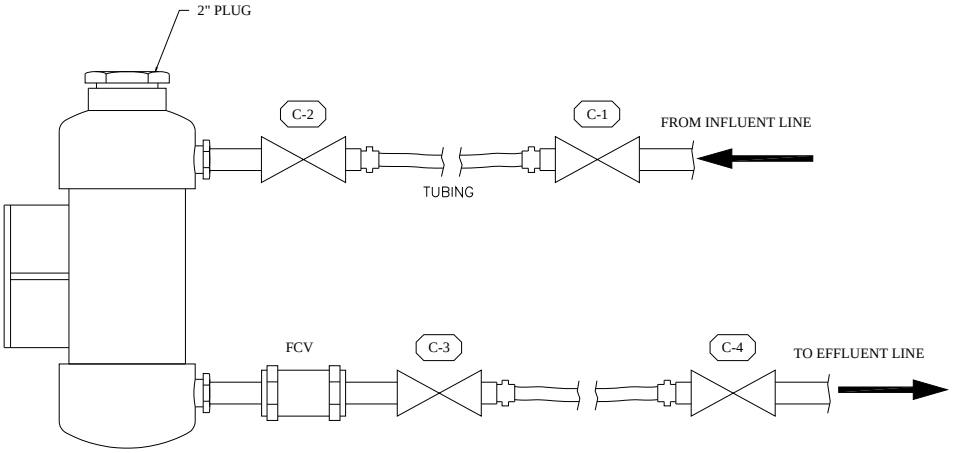

C-1 - CAC INFLUENT BLOCK VALVE
C-2 - CAC INFLUENT VALVE
C-3 - CAC EFFLUENT VALVE
C-4 - CAC EFFLUENT BLOCK VALVE
FCV - FLOW CONTROL VALVE (1 GPM)

CALGON CARBON CORPORATION

CALGON CARBON CORPORATION

SPARE PARTS PROGRAM

INTRODUCTION: Calgon Carbon Corporation has developed a standard product line of engineered treatment systems for air and water applications. Much of the fabrication and assembly of these systems is done at Calgon Carbon's own facility; therefore most of the system parts and components are maintained in inventory. As a service to clients to provide a source of specified parts in a timely manner, these parts and components are available for purchase. Prices a valid for one year from the date on the list, after this time, the prices may be subject to revision.

ORDER ENTRY: The purchase order for spare parts should be entered using the spare parts order form provided. This form should be sent to:

Calgon Carbon Corporation
Order Service Department
P.O. Box 717
Pittsburgh, PA 15230-0717

Orders can also be placed via fax to 1-412-787-6323
Verbal orders can be placed by calling the Order Services Department at 1-800-4CARBON (1-800-422-7266).

SHIPPING: Order shipping options are either Rush (next day delivery by UPS) or Normal (one week delivery by UPS). Other shipping directions should be requested at the time of ordering. Shipping charges will be added to the total price of the order.

SALES TAX: Sales tax will be added to the invoice unless a sales tax exemption certificate is provided with the order.

PAYMENT: An invoice will be sent to the billing address upon shipment of the order. Payment terms are net 30 days after shipment.

WARRANTY: Calgon Carbon Corporation warrants that the equipment sold hereunder shall be free of defects in material and workmanship for a period of one (1) year from the date of shipment. This warranty does not apply to problems associated with normal wear and tear, improper maintenance, negligence, misuse, abuse or failure to operate the equipment in strict accordance with the operating and maintenance plan provided. For those items provided by, but not directly manufactured by Calgon Carbon, the manufacturer's warranty shall apply, provided warranty coverage exceeds that which is provided by Calgon Carbon. All other warranties, either expressed or implied, are hereby disclaimed, including, but not limited to, the warranty of merchantability and fitness for the particular purpose.

LIMITATIONS OF LIABILITY: The purchaser's exclusive remedy for any cause of action arising out of this transaction, including but not limited to breach of warranty, negligence and /or indemnification, is expressly limited to the maximum of the purchase price of the equipment sold hereunder. All claims of whatsoever nature shall be deemed waived unless made in writing within forty-five (45) days of the occurrence giving rise to the claim. In no event shall Calgon Carbon for any reason or pursuant to any provision of the warranty be liable for the incidental or consequential damages, or damages in excess of the purchase price of the equipment supplied, loss of profit, or fines imposed by Government agencies.

NOTE: TO CUSTOMERS INTERESTED IN VIDEOTAPING CALGON CARBON CORPORATION REPRESENTATIVES DURING OPERATOR TRAINING SESSIONS, CARBON TRANSFERS, SYSTEM INSPECTIONS, OR OTHER SITE ACTIVITIES PRIOR WRITTEN PERMISSION FROM CALGON CARBON CORPORATION IS REQUIRED BEFORE VIDEOTAPING MAY COMMENCE.

VIDEO AGREEMENT

This agreement is made this ___ day of _____, 20___, by and between Calgon Carbon Corporation, hereinafter referred to as "CCC", a Delaware corporation and _____, (hereinafter referred to as "Owner-Operator").

In consideration for allowing Owner to videotape "CCC" personnel performing maintenance or service, or demonstrating the operation of _____ (the equipment) the Owner-Operator and "CCC" agree as follows:

1. **The video tape is used at Owner-Operator's own risk and is not intended nor is it to be used as a substitute for safe operating procedure in accord with industry standard, training, safety instruction or the operation and maintenance manuals. CCC ASSUMES NO LIABILITY FOR THE COMPLETENESS OR ACCURACY OF THE VIDEO TAPE. ANY CLAIM FOR INJURY OR PROPERTY DAMAGE WHICH ARISES OUT OF OR IN CONNECTION WITH THE USE OF THE VIDEO TAPE BY THE OWNER-OPERATOR, ITS EMPLOYEES, OR AGENTS IS THE SOLE RESPONSIBILITY OF THE OWNER-OPERATOR.**

2. **OWNER-OPERATOR AGREES TO HOLD CCC HARMLESS AND PAY ALL LEGAL EXPENSESAND JUDGEMENTS INCLUDING PUNITIVE DAMAGES, RESULTING FROM LITIGATION WHERE THE TAPE IS ENTERED INTO EVIDENCE.**

3. **This tape is for the Owner-Operators own use, and the Owner agrees to not sell or transfer the tape to any other party.**

4. **CCC must receive a copy of the tape and reserves the right to final edit the tape a Owner-Operator's expense.**

5. **Owner-Operator must affix the label CCC provides to ALL the tapes and read the following statement on the tape both at the beginning and end of the taped presentation.**

THIS IS NOT A CCC TRAINING OF SAFETY INSTRUCTION TAPE. FOR SAFETY OR TRAINING INSTRUCTIONS YOU MUST CONSULT THE OPERATION AND MAINTENANCE MANUAL AND/OR CCC PERSONNEL, AND FOLLOW SAFE OPERATING PROCEDURE IN ACCORD WITH INDUSTRY STANDARDS

Notwithstanding the reasonableness of the agreements herein, in the event that a court of competent jurisdiction determines that any part of the agreement set forth in paragraphs 1, 2, 3, 4, and 5 be held invalid or unenforceable, the provisions of this video agreement shall be deemed severable, and the remaining parts shall be valid and enforceable as though the invalid and unenforceable parts had not been included in the agreement.

When this agreement is accepted and signed by the Owner-Operator and accepted by CCC the video taping may start. It is understood that Owner-Operator's camera operator will not hinder or distract CCC personnel during their work.

Accepted by: _____	***Accepted by:*** _____
(Owner-Operator)	
_____	_____
(Signature)	***(Signature)***
_____	_____
(Position)	***(Position)***

By signing this, the signer is verifying they have authorization to make such agreements binding on the Owner-Operator.

CALGON

CALGON CARBON CORPORATION

Section 10

MEDIA / PRESSURE DROP INFORMATION

SALES SPECIFICATION SHEET

CalRes™ 2109

Anion Exchange Resin

Resin Type:	Strong Base Anion
Structure:	Macroporous
Functional Group:	N-Tributyl Amine
Ionic Form:	Chloride

Test	Specification Min	Max	Calgon Carbon Test Method
Wet Volume Capacity, Cl Form, meq/mL	0.60		ASTM D 2187 Method M Mod.
Water Retention Capacity, Cl Form, %	50	65	ASTM D 2187 Method B Mod.
Bulk Density, g/L	0.68	0.72	CCC Internal Method
Particle Density, g/mL	1.05	1.15	CCC Internal Method
Whole Bead, %	90		CCC Internal Method
US Sieve Series, %			ASTM D 2187 Method D Mod.
+ 16		3	
- 50		5	

Manufacturing Point of Origin:	Product must be manufactured in the United States of America or EU.
Min. Required Approvals:	ANSI/NSF-61 by NSF, WQA, UL or other accredited laboratory California Department of Health Services Approval / Acceptance

This product is Made to Order.

Calgon Carbon Corporation's ion exchange products are continuously being improved and changes may have taken place since this publication went to press.

CALGON CARBON CORPORATION

P. O. Box 717
Pittsburgh, PA 15230

MATERIAL SAFETY DATA SHEET

IDENTITY: CalRes™ 2109	DATE: 08/17/2006
PRODUCT ID #:	IDENTITY (As used in Label and list): CalRes™ 2109 Anion Exchange Resins

SECTION I – MANUFACTURER'S NAME AND CONTACT INFORMATION

MANUFACTURED BY: CALGON CARBON CORPORATION P.O. Box 717 Pittsburgh, PA 15230 – 0717	EMERGENCY PHONE NUMBER: (412) 787 – 6700
Date Prepared: 08/17/2006	Prepared by: Peter Ritchey

SECTION II - COMPOSITION/INFORMATION ON INGREDIENTS

INGREDIENTS	% (BY WEIGHT)	CAS#
Styrene, divinylbenze polymer, chloromethylated, tributylamine-functionalized	45 – 65	116565-72-1
Water	35 – 55	007732-18-5

This document is prepared pursuant to the OSHA Hazard Communication Standard (29 CFR 1910.1200). In addition, other substances not 'hazardous' per this OSHA standard may be listed. Where proprietary ingredient is shown, the identity may be made available as provided in this standard.

SECTION III – PHYSICAL / CHEMICAL PROPERTIES

Boiling Point	N/A	Density	43 lb/ft^3	Solubility in Water	Negligible
Vapor Pressure (mm Hg)	N/A	Evaporation Rate (Butyl Acetate = 1)	N/A	Melting Point	N/A
Vapor Density (Air = 1)	N/A	Appearance & Odor	White to tan spherical beads with low to no odor		

SECTION IV – FIRE AND EXPLOSION HAZARD DATA

Flash Point:	N/A	Method Used:	N/A			
Flammability Limits:	LFL	N/A	UFL	N/A		
Extinguishing Media:		Water, Dry Chemical, or carbon dioxide fire extinguishers.				
Special Fire Fighting Procedures:		Wear positive pressure, self-contained breathing apparatus (SCBA) and protective fire-fighting clothing (including fire fighting helmet, coat, trousers, boots, and gloves). If protective equipment is not available, fight fire from a protected location or safe distance.				
Combustion Products:		Combustion products may include and are not limited to: Alkylbenzenes, vinylbenzenes, naphthalene, benzaldehydes, phenol, carbon dioxide, water, organic amines, chlorine, nitrogen oxides, ammonia, methyl chloride.				

CALGON CARBON CORPORATION

SECTION V – REACTIVITY DATA

Stability: Stable	Conditions to Avoid: Avoid temperatures over 230 °C.
Incompatibility (Conditions to Avoid):	Oxidizing materials such as nitric acid will attack organic resin under certain conditions degrading the resin, potentially to the point of explosive reaction.
Hazardous Decomposition or Byproducts:	See combustion products in Section IV.
Hazardous Polymerization:	Will not occur.

SECTION VI – HEALTH HAZARD DATA

Effects and Hazards	
Eye Contact:	Solid or dust may cause irritation or corneal damage due to mechanical action.
Skin Contact	The product is not a skin irritant.
Skin Absorption:	Skin absorption is unlikely due to physical properties.
Inhalation:	Vapors unlikely due to physical properties. Dust inhalation could be problematic during resin transfers.
Ingestion:	Single dose oral LD50 has not been determined. Single dose oral toxicity is believed to be low. No hazards anticipated from ingestion.
Emergency and First Aid Procedures:	Eye contact – flush with copious quantities of water. If irritation persists, consult a physician. Skin contact – wash with soap and water.

SECTION VII – HANDLING PRECAUTIONS

Material Release or Spillage:	Sweep up all material immediately in refuse container or repackage. Resin beads cause the floor to become a slip hazard.
Waste Disposal Method:	Dispose of in accordance with federal, state, and local regulations.
Storing Requirements:	Keep supersacks and drums / plastic bags sealed to prevent drying or moisture loss from resin. Store below 50 °C (122 °F) and above 0 °C (32 °F).

SECTION VIII – CONTROL MEASURES

Ventilation:	Local ventilation is recommended.
Respiratory Protection:	A NIOSH-approved particulate respirator is recommended if excessive dust is generated.
Skin Protection:	Protective gloves recommended for minimize dust exposure.
Eye Protection:	Safety glasses or goggles recommended (ANSI Z87.1).

CALGON CARBON CORPORATION

SECTION IV – REGULATORY INFORMATION

SARA Hazard Category:	Non-hazardous
OSHA:	Nonhazardous according to definitions of health hazard and physical hazard provided in the Hazard Communication Standard (29 CFR 1910.1200)
WHMIS Classification:	Does not meet any hazardous classification.

SECTION V – OTHER REGULATORY INFORMATION

While this information and recommendations set forth herein are believed to be accurate as of the date hereof, Calgon Carbon Corporation makes no warranty with respect and disclaims all liability from reliance thereon.

END OF MATERIAL SAFETY DATA SHEET

FILTRASORB® 300
Granular Activated Carbon for Municipal Specifications

CALGON
CALGON CARBON CORPORATION

Description

FILTRASORB® 300 is a granular activated carbon developed by Calgon Carbon Corporation for the removal of taste and odor compounds, disinfection by-product precursors, and other dissolved organic compounds from potable water.

This activated carbon is made from selected grades of bituminous coal to produce a high activity, durable granular product capable of withstanding the abrasion associated with repeated backwashing, air scouring, and hydraulic transport. Activation is carefully controlled to produce an equal blend of both low energy pores as measured by iodine number and high energy pores as measured by trace capacity number for effective adsorption of a broad range of high and low molecular weight organic contaminants. The higher density of this activated carbon results in a greater adsorptive capacity per filter volume as measured by the volume iodine number. The product is also formulated to comply with all the applicable provisions of the AWWA Standard for Granular Activated Carbon, edition B604-05, the stringent extractable metals requirements of ANSI/NSF Standard 61, and the Food Chemicals Codex.

Specifications	Value
Iodine Number.	900 mg/g (min)
Moisture by weight	2% (max)
Effective size	0.8 - 1.0 mm
Uniformity Coefficient	2.1 (max)
Abrasion No.	78 (min)
Trace Capacity Number	10 mg/cc (min)
Screen Size by weight, US Sieve Series	
On 8 mesh	15% (max)
Through 30 mesh	4% (max)

Typical Property	Value
Apparent Density	0.56 g/cc
Ash by weight	7%

Features	Benefits
Bituminous-based raw material	Provides higher hardness relative to other raw materials reducing the generation of fines and product losses during backwashing.
Coal is pulverized and reagglomerated with suitable binder	Pore structure provides an equal blend of low and high energy pores for effective removal of a broad range of high and low molecular weight organic compounds. Has a high density, resulting in a greater adsorption capacity per filter volume, wets readily, and does not float, thus minimizing loss during backwash operations. Creates optimal transport paths for faster adsorption.

Bed Expansion

Based on backwashed and segregated bed

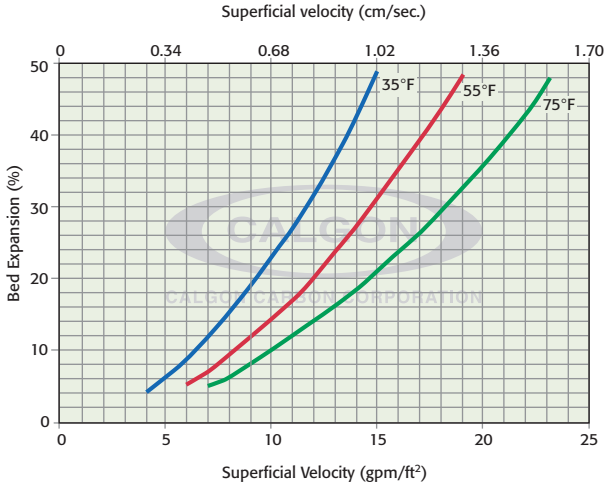

Pressure Drop

Based on backwashed and segregated bed

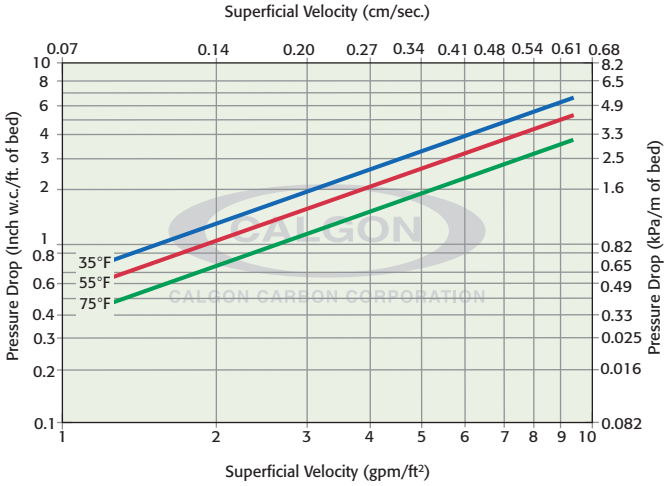

FILTRASORB® 300
Granular Activated Carbon for Municipal Specifications

CALGON
CALGON CARBON CORPORATION

Applications

FILTRASORB® 300 activated carbon can be used to treat surface and groundwater sources for the production of drinking water. This product can be used as a complete replacement for sand and anthracite media. FILTRASORB® 300 activated carbon functions as a dual purpose media, providing both filtration and adsorption. FILTRASORB® has been used successfully in drinking water applications for over 40 years.

Design Considerations

As a replacement for existing filter media, conversion to FILTRASORB® 300 granular activated carbon imposes no major changes to a plant's normal filtration operations. Calgon Carbon Corporation can also provide complete modular adsorption systems as an add-on treatment stage if required.

Safety Message

Wet activated carbon preferentially removes oxygen from air. In closed or partially closed containers and vessels, oxygen depletion may reach hazardous levels. If workers are to enter a vessel containing carbon, appropriate sampling and work procedures for potentially low oxygen spaces should be followed, including all applicable Federal and State requirements.

CALGON
CALGON CARBON CORPORATION

Making Water and Air Safer and Cleaner

Calgon Carbon Corporation
P.O. Box 717
Pittsburgh, PA USA 15230-0717
1-800-422-7266
Tel: 1-412-787-6700
Fx: 1-412-787-6713

Chemviron Carbon
European Operations of
Calgon Carbon Corporation
Zoning Industriel C de Feluy
B-7181 Feluy, Belgium
Tel: + 32 (0) 64 51 18 11
Fx: + 32 (0) 64 54 15 91

Calgon Carbon Asia PTE LTD
9 Temasek Boulevard
#08-01A Suntec Tower Two
Singapore 038989
Tel: + 65 6 221 3500
Fx: + 65 6 221 3554

Your local representative

Copyright© 2008 Calgon Carbon Corporation, all rights reserved.

Material Safety Data Sheet

U.S. Department of Labor
Occupational Safety and Health Administration
This form is consistent with ANSI standard for preparation of MSDS's in accordance with OSHA's Hazard Communication Standard, 29 CFR 1910.1200.

Product Type: **FILTRASORB 300**	
Product Code: 1975	**Profile No:** 1
Effective Date: March 31, 2008	**Supersedes: XXXXX**

SECTION I - PRODUCT AND COMPANY INFORMATION

Company Identification (USA)	**Calgon Carbon Corporation** P.O. Box 717 Pittsburgh, PA 15230-0717	
Telephone Number(s)	Information	412-787-6700
	Emergency	412-787-6700
Company Identification (Europe)	**Chemviron Carbon** Zoning Industriel de Feluy B-7181 Feluy, Belgium	
Telephone Number(s)	Information	32 64 51 18 11
	Emergency	32 64 51 18 11
Date Prepared January 26, 2009	Signature of Preparer (optional)	

SECTION II – COMPOSITION /INFORMATION ON INGREDIENTS

Nonhazardous components are listed at 3% or greater; acute hazards are listed when present at 1% or greater and chronic hazards are listed when present at 0.01% or greater. This is not intended to be a complete compositional disclosure.

Ingredient / Component	CAS No	% by Wt
Activated Carbon (Coal based)	7440-44-0	100

SECTION III – HAZARD(S) IDENTIFICATION

Emergency Overview: Black particulate solid, pellet or powder. Contact may cause eye irritation. Dust may be slightly irritating to eyes and respiratory tract. Avoid generation of dust during handling.

CAUTION: Wet activated carbon removes oxygen from air causing a severe hazard to workers in enclosed or confined space. Before entering such an area, sampling and work procedures for low oxygen levels should be taken to ensure ample oxygen availability, observing all local, state and federal regulations

OSHA Regulatory Status		Not regulated	
HMIS Ratings	Health	0	4 = Extreme/Severe 3 = High/Serious 2 = Moderate 1 = Slight 0 = Minimum W = Water Reactive OX = Oxidizer
(NFPA)	Flammability	1	
	Reactivity	0	
	Special		
Protective Equipment	Safety glasses with side shields or goggles, gloves, long sleeve shirt or lab coat, long pants recommended.		
Health Effects	See Section IV		
Environmental Effects	See Section XII		

Section IV – First-Aid Measures

Route of exposure	
Eyes	Dust may cause mild irritation, possibly reddening.
Skin	Dust may cause mild irritation, possibly reddening.
Inhalation	Dust may cause mild irritation to the upper respiratory tract.
Ingestion	Dust may cause mild irritation to digestive track resulting in nausea or diarrhea.
Signs/Symptoms of Exposure	Dust may cause irritation and redness of eyes, irritation of skin and respiratory system.
Emergency and First Aid Procedures	For eye contact, immediately flush with copious amounts of water for at least 15 minutes, lifting both the upper and lower lids occasionally; seek medical attention. For skin contact, wash with soap and water; seek medical attention. For inhalation, Remove to fresh air and rest as needed; seek medical attention for any breathing difficulty. For ingestion, drink plenty of water; seek medical attention.
Medical Conditions Generally Aggravated by Exposure	People with pre-existing skin conditions or eye problems or impaired respiratory function may be more susceptible to the potential effects of the dust.

SECTION V – FIRE FIGHTING MEASURES

Suitable Extinguishing Media	Use an extinguishing media suitable for the surrounding fire.
Unsuitable Extinguishing Media	None known
Specific Hazards	As with most organic solids, fire is possible at elevated temperatures or by contact with an ignition source. Activated carbon is difficult to ignite and tends to burn slowly (smolder) without producing smoke or flame. Carbon monoxide and carbon dioxide gas may be generated if combusted. Contact with strong oxidizers such as ozone or liquid oxygen may cause rapid combustion.
Protective Equipment and Procedures	Wear NIOSH approved self-contained breathing apparatus suitable for the surrounding fire.

SECTION VI – ACCIDENTAL RELEASE MEASURES

Personal Precautions	Wear protective equipment, keep unnecessary personnel away, ventilate area of spill.
Environmental Precautions	The material is not soluble but can cause a particulate emission if discharged to waterways; therefore, dike all entrances to sewers and drains to avoid introducing the material into the waterways.
Containment & Clean-up	Dike all entrances to sewers and drains. Vacuum or shovel spilled material and place in closed container for disposal. Remove product to appropriate storage area until it can be properly disposed of in accordance with local, state and federal regulations. Avoid dust formation. See section XIII
Other information	NA

SECTION VII – HANDLING AND STORAGE

Handling	Avoid prolonged contact with eyes and skin. Keep away from ignition sources. Use in well ventilated areas. Protect containers from physical damage. Wash hands after handling.
Storage	Store in cool, dry, ventilated area and in closed containers. Keep away from oxidizers, heat or flames. Store away from ignition sources.

SECTION VIII – EXPOSURE CONTROLS/PERSONAL PROTECTION

Component	OSHA PEL	ACGIH TLV	Other limits
Activated Carbon	5 mg/M^3 Resp	5 mg/M^3 Resp	

Exposure Guidelines	Wet activated carbon removes oxygen from air posing a hazard to workers in enclosed or confined space. Before entering such an area, sample the air to assure sufficient oxygen supply. Use work procedures for low oxygen levels, observing all local, state and federal regulations.
Engineering Controls	No special ventilation requirements. Good general ventilation should be adequate. Mechanical ventilation is recommended for enclosed or confined spaces
Personal Protective Equipment	Use of NIOSH approved particulate filter is recommended if dust is generated in handling. The usual precautionary measures for handling chemicals should be followed, i.e. gloves, safety glasses w/side shields or goggles, long sleeve shirt or lab coat, dust respirator if dusty. Other protective clothing/equipment as appropriate.
General Hygiene	The usual precautionary measures for handling chemicals should be followed: i.e. Keep away from food and beverage; remove contaminated clothing immediately; wash hands before breaks or eating; avoid contact with eyes and skin.

SECTION IX – PHYSICAL AND CHEMICAL PROPERTIES

Boiling Point	NA	**Melting Point**	NA
Vapor Pressure (mm Hg.)	0	**Evaporation Rate**	NA
Vapor Density (AIR = 1)	solid	**Flash Point**	NA
Specific Gravity	0.4 to 0.7	**UEL**	NA
		LEL	NA
Flammability Limits	Ignition Temperature > 220º C		
Odor	None		
Solubility in Water	Product is not soluble.		
Appearance	Black granular or powder material		

SECTION X – STABILITY AND REACTIVITY

STABILITY	**UNSTABLE**		**CONDITIONS TO AVOID:** None
	STABLE	**XX**	
HAZARDOUS REACTION	**MAY OCCUR**		**CONDITIONS TO AVOID:** None
	WILL NOT OCCUR	**XX**	
Caution: High concentrations of organics in air will cause temperature rise due to heat of adsorption. At very high concentration levels this may cause a bed fire. High concentrations of Ketones and Aldehydes may cause a bed temperature rise due to adsorption and oxidation.			
Incompatible Materials			Alkali Metals and Strong Oxidizers such as ozone, oxygen, permanganate, chlorine.
Hazardous Decomposition Products			Carbon monoxide and carbon dioxide gas may be generated during combustion of this material.

SECTION XI – Toxicological information

Acute Effects		
Toxicity Studies	Oral LD_{50}	Not Determined on the finished product.
	Dermal LD_{50}	Not Determined on the finished product.
Inhalation	See section IV	
Ingestion	See section IV	
Eye Irritation	See section IV	
Skin Irritation	See section IV	
Sensitization	Not Determined on the finished product.	
Target Organ (s) or System		Eyes, Skin and Upper Respiratory System
Signs and symptoms of Exposure		Irritation and redness of eyes, irritation of skin and respiratory system may result from exposure to carbon dust. See Sections III and IV
Chronic Effects		
Carcinogenicity	Not Determined on the finished product.	
Mutagenicity	Not Determined on the finished product.	
Reproductive Effects	Not Determined on the finished product.	
Developmental Factors	Not Determined on the finished product.	

SECTION XII – ECOLOGICAL INFORMATION

Ecotoxicity	Not Determined on the finished product.
Persistence/degradability	Not Determined on the finished product.
Bioaccumulation/Accumulation	Not Determined on the finished product.
Mobility in Environmental Media	Not Determined on the finished product.
Other Adverse Effects	Not Determined on the finished product.

SECTION XIII – DISPOSAL CONSIDERATIONS

Vacuum or shovel material into a closed container. Storage and disposal should be in accordance with applicable local, state and federal laws and regulations. Local regulations may be more stringent than state or federal requirements.

SECTION XIV – TRANSPORT INFORMATION

This information as presented below only applies to the material as shipped. The identification based on characteristic(s) or listing may not apply if the material has been used or otherwise contaminated. It is the responsibility of the waste generator to determine the toxicity and physical properties of the material generated to determine the proper waste identification and disposal methods in compliance with applicable regulations.

Land	DOT Regulations	Proper Shipping Description	FILTRASORB 300 (Steam Activated Carbon)
	Canadian WHMIS	Hazard Class	NA See note below
		UN/NA	UN 1362
Water	IMO / IMDG	Proper Shipping Description:	FILTRASORB 300 (Steam Activated Carbon)
		Hazard Class	NA See note below
		UN/NA	UN 1362
Air	IACO / IATA	Proper Shipping Description	FILTRASORB 300 (Steam Activated Carbon)
		Hazard Class	NA See note below
		UN/NA	UN 1362
		Information reported for product/size: 0.5 Kg	

This product has been tested according to the *United Nations Transport of Dangerous Goods* test protocol for a "self-heating substance". It has been specifically determined that this product does not meet the definition of a self heating substance or any other hazard class, and therefore is not a hazardous material. Please note that this information is applicable only for the Activated Carbon Product identified in this document.

SECTION XV – REGULATORY INFORMATION

SARA Title III 302	Product is not subject to SARA Title III, section 302 regulation.	
SARA Title III 313	Product is not subject to SARA Title III, section 313 regulation.	
TSCA	Product is listed	
California Proposition 65	Product is not listed	
Canadian classification	**WHMIS**	Product is listed.
	DSL #	Product is listed.
EEC Council Directives relating to the classification, packaging, and labeling of dangerous substances and preparations.		
Risk and Safety Phrases	R36: Irritating to the eyes, R37: Irritating to the respiratory system, R38: Irritating to the skin,	

SECTION XVI – OTHER INFORMATION

Intended Use	The material is generally used for treatment of gases and liquids
The information contained in this document applies to this specific material as supplied. It may not be valid for this material if it is used in combination with any other materials. It is the user's responsibility to determine the suitability and completeness of this information for their particular use.	
While the information and recommendations set forth herein are believed to be accurate as of the date hereof, Calgon Carbon Corporation makes no warranty with respect to same and disclaims all liability for reliance there on.	

References:

NA not applicable

Legend:

ACGIH	- American Conference of Governmental Industrial Hygienists
ANSI	- American National Standards Institute
ATSDR	- Agency for Toxic Substances and Disease Registry
C	- Ceiling (limit value)
CAS #	- Chemical Abstracts Service Registry Number
CERCLA	- Comprehensive Environmental Response, Compensation, and Liability Act
CEPA	- Canadian Environmental Protection Act
CFR	- Code of Federal Regulations
DOT	- Department of Transportation
DSL	- Domestic Substances List
EINECS	- European Inventory of Existing Commercial Chemical Substances
ERAP	- Emergency Response Assistance Plan
IATA	- International Air Transportation Association
IARC	- International Agency for Research on Cancer
ICAO	- International Civil Aviation Organization
IDLH	- Immediately Dangerous to Life and Health
IMO	- International Maritime Organization
IMDG	- International Maritime Dangerous Goods
LC_{50}	- The concentration of material in air expected to kill 50% of a group of test animals
LD_{50}	- Lethal Dose expected to kill 50% of a group of test animals
NFPA	- National Fire Protection Association
NIOSH	- National Institute for Occupational Safety and Health
NTP	- National Toxicology Program
OSHA	- Occupational Safety and Health Association
PEL	- Permissible Exposure Limit
RCRA	- Resource conservation and Recovery Act
RQ	- Reportable Quantity
SARA	- Superfund Amendments and Reauthorization Act
STEL	- Short Term Exposure Limit
TDG	- Transportation of Dangerous Goods Act/Regulation
TLV	- Threshold Limit Value
TSCA	- Toxic Substances Control Act
TWA	- Time Weighted Average
WHMIS	- Workplace Hazardous Material Information System

* * * END OF MATERIAL SAFETY DATA SHEET * * *

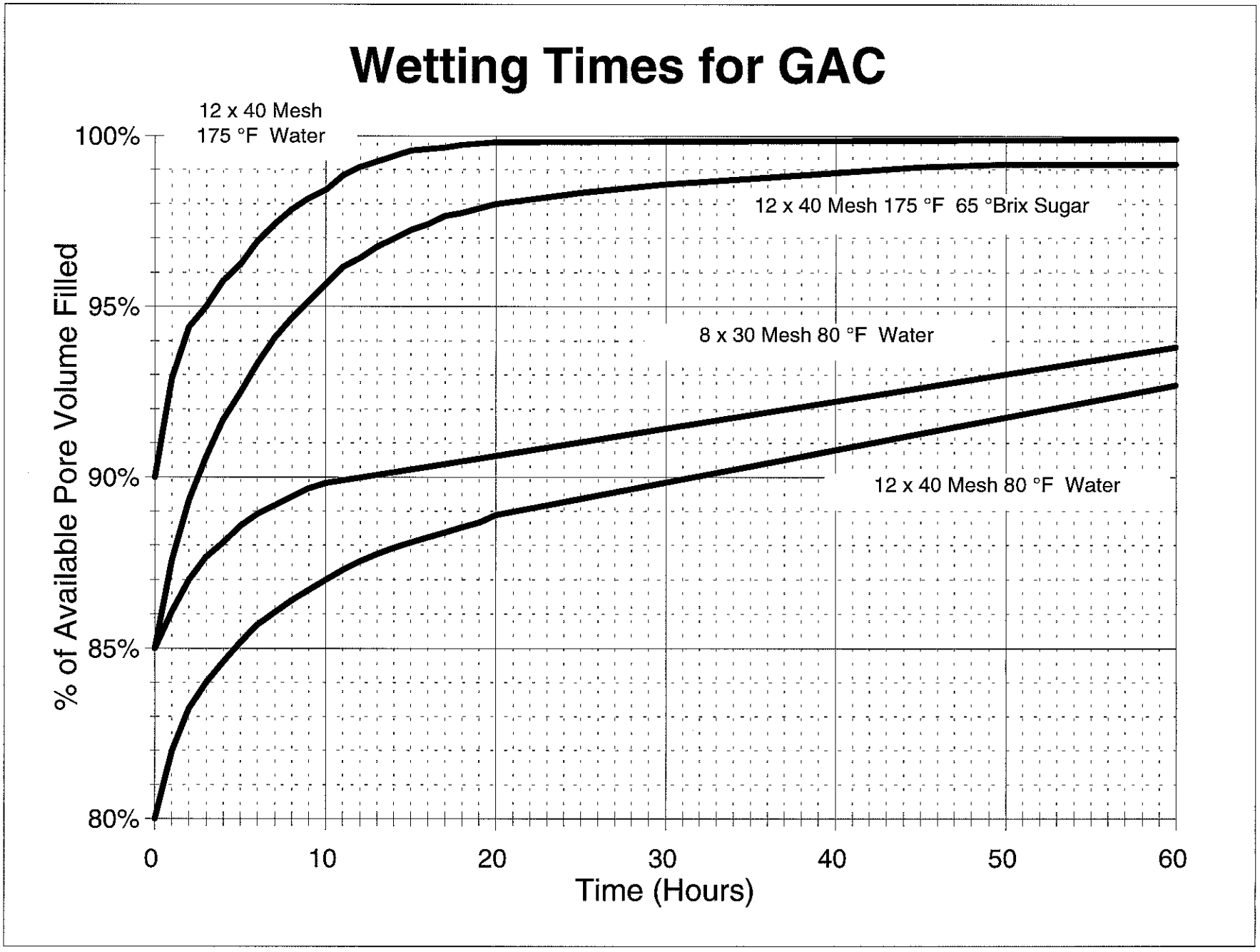
Wetting Times for GAC
12 x 40 Mesh
175 °F Water
12 x 40 Mesh 175 °F 65 °Brix Sugar
8 x 30 Mesh 80 °F Water
12 x 40 Mesh 80 °F Water
100%
95%
90%
85%
80%
% of Available Pore Volume Filled
0
10
20
30
40
50
60
Time (Hours)

FILTRASORB 300 - BED EXPANSION

BACKWASHED & SEGREGATED BED

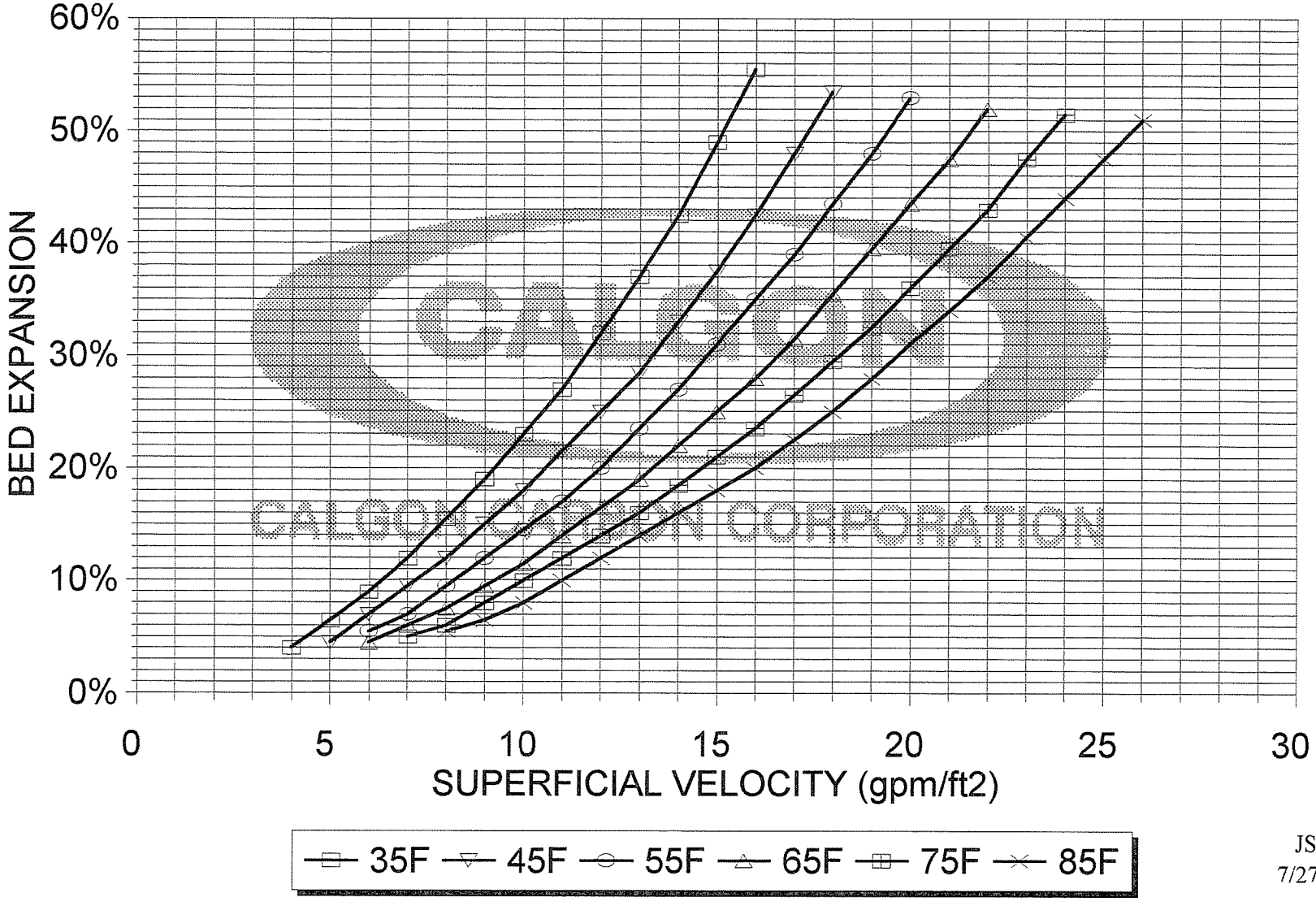

JSR
7/27/94

Disinfection Of Granular Activated Carbon

CALGON
CALGON CARBON CORPORATION

Introduction

There are situations where it becomes necessary to disinfect granular activated carbon (GAC) beds due to the presence of bacteria. The bacteria are usually present because of oxygen depletion in wastewater and potable water applications, and low temperatures (>140ºF) in food-related applications (sugars, etc.). The procedure described below is intended for in situ disinfection of carbon in an adsorber containing 20,000 pounds of GAC. By adjusting the amount of sodium hydroxide, larger or smaller carbon beds can be disinfected with this procedure.

Caution Due to the hazardous nature of sodium hydroxide (NaOH) and hydrochloric acid (HCl), appropriate protective clothing such as a face shield, goggles, gloves and impervious clothing must be worn when handling these chemicals. For specific instructions, refer to your plant procedures and/or material safety data sheets for these chemicals. Materials of construction must be compatible with NaOH and HCl.

Disinfection

1. Take the adsorber off line and make sure that a line on top of the adsorber is open to serve as a vent.
2. Drain the water from the adsorber through the adsorber effluent line.
3. Pump 5% sodium hydroxide into the adsorber through the effluent line. For Calgon Carbon's backwashable Model 10 and Model 12 adsorbers, the required volumes are 7,000 and 6,000 gallons, respectively. See step 9a for an alternate procedure.
4. Stop pumping when the NaOH solution overflows through the vent line.
5. Allow the carbon to soak in the sodium hydroxide for at least four hours.
6. Drain NaOH solution from the adsorber through the adsorber effluent line.

Neutralization

7. Wash the carbon by adding contaminant-free or clean water through the effluent line for 7-10 hours at a flow of 1.3-3 gpm/ft^2 in order to wash out the residual sodium hydroxide and neutralize the carbon. The disinfection is then complete.

8a. An alternate, faster procedure for neutralizing the carbon includes acid treatment. After the sodium hydroxide solution is drained from the adsorber, pump 5 gallons of reagent grade hydrochloric acid (37% HCl) into the adsorber through the effluent line.

8b. Fill the adsorber with clean water by backfilling through the effluent line at 3-5 gpm/ft^2 so as to thoroughly mix the content of the adsorber. Shut off the backfill water when it begins to overflow through the vent line.

8c. Allow the carbon to soak for 60 minutes, then drain the adsorber. Check the pH of the water, which should be in the range of 8 to 10.

8d. Wash the carbon by adding clean water through the effluent line at a rate of 1.3-3 gpm/ft^2 until the pH of the effluent water matches the influent water or within desired pH range. Disinfection is then complete.

Alternate Disinfection Procedure

9a. After step 2, add ~ 1,000 gallons of clear water through the effluent line.

9b. After completing step 9a, pump the contents of two 55-gallon drums of 50% sodium hydroxide into the adsorber through the effluent line.

9c. Fill the adsorber with clean water by backfilling through the effluent line at 3-5 gpm/ft^2 so as to thoroughly mix the contents of the adsorber.

9d. Shut off the backfill water when it begins to overflow through the vent line. Check the pH of the water exiting the vent line. It should be 13 or higher.

10. Go to step 5.

Safety Message

Wet activated carbon preferentially removes oxygen from air. In closed or partially closed containers and vessels, oxygen depletion may reach hazardous levels. If workers are to enter a vessel containing carbon, appropriate sampling and work procedures for potentially low oxygen spaces should be followed, including all applicable Federal and State requirements.

CALGON
CALGON CARBON CORPORATION

Making Water and Air Safer and Cleaner

Calgon Carbon Corporation
P.O. Box 717
Pittsburgh, PA USA 15230-0717
1-800-422-7266
Tel: 412-787-6700
Fx: 412-787-6713

Chemviron Carbon
European Operations of
Calgon Carbon Corporation
Zoning Industriel C de Feluy
B-7181 Feluy, Belgium
Tel: + 32 (0) 64 51 18 11
Fx: + 32 (0) 64 54 15 91

Calgon Carbon Asia
65 Chulia Street
#37-03 OCBC Centre
Singapore 049513
Tel: +65 6 221 3500
Fx: +65 6 221 3554

Your local representative

Copyright© 2005 Calgon Carbon Corporation, all rights reserved.

System
Pressure Drop

Project: IX-08089.MHLL
Revision: 0
Title: System Pressure Drop @ 60° F

	Filters Clean	Filters Dirty	See Note(s)
	psi	psi	
Total Pressure Drop @ 7,000 gpm	55.83	75.83	
Inlet Filters	5	25	1
(4) Model 12 Resin Systems @ 1,750 gpm	25.91	25.91	2,3
(5) Model 12 Carbon Systems @ 1,400 gpm	19.92	19.92	2
Header Piping (See Sheet 2)	5	5	4

Notes:
1) The inlet filter cartridges should be changed when the total pressure drop across them becomes 25 psid. If they are changed prior to this then the design pressure drop can be reduced.
2) This includes one (1) witch hat strainer in the 10" effluent line of each vessel.
3) Using 494 cubic feet of resin.
4) From the points where the 24" influent/effluent goes underground on the treatment pad.

Pressure Drop Curve for Monk Hills (One) Model 12 System, Series Flow with 40,000 lbs F300 Carbon, backwashed at 60 deg. F

CALGON
CALGON CARBON CORPORATION

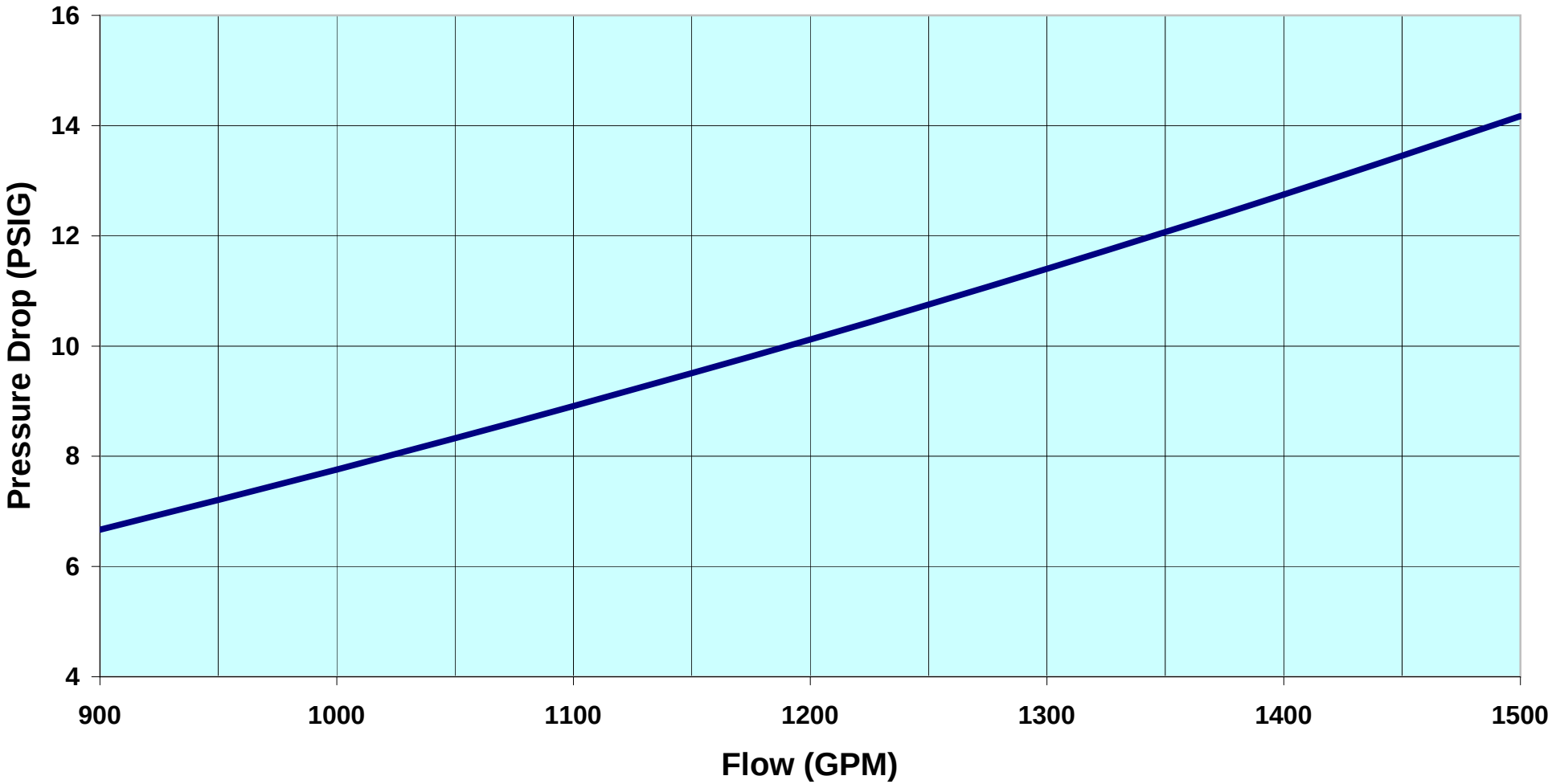

MHS 01/21/2009

Pressure Drop Curve for Monk Hills (One) Model 12 System, Series Flow with CalRes 2109, at 60 deg. F (Resin Volume Above Top of Septa)

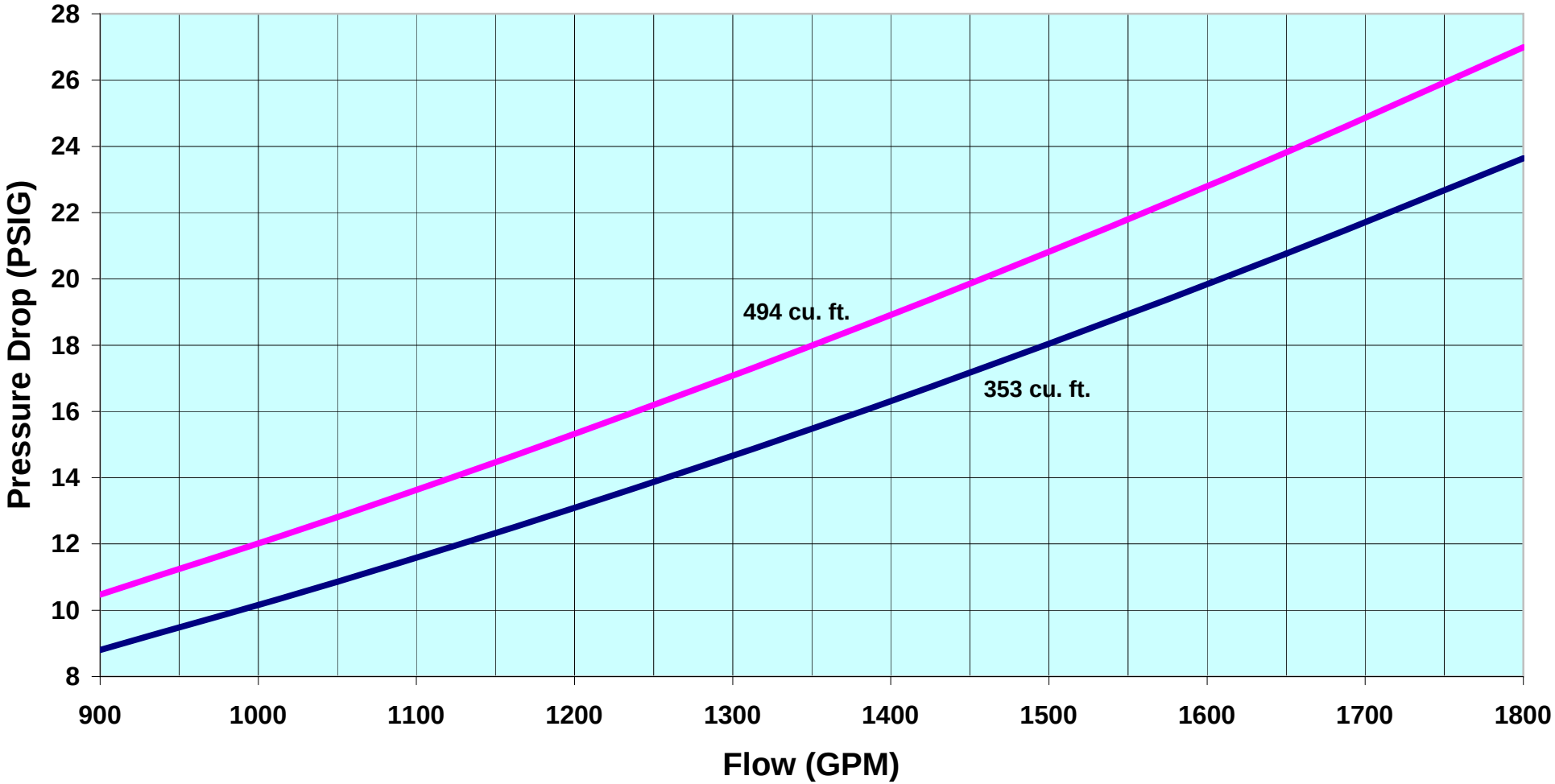

MHS 01/21/2009

CALGON

CALGON CARBON CORPORATION

Section 11

ASME SECTION VIII U1A FORMS

CALGON

CALGON CARBON CORPORATION

Section 12

SPECIFICATIONS AND CATALOG CUTSHEETS

CALGON CARBON CORPORATION	CARBON STEEL PIPE MATERIAL SPECIFICATION	SPEC NO:
	CARBON STEEL PIPE WITH STEEL FITTINGS	C02

MATERIAL:
Carbon steel pipe with steel fittings

RATING:
125 PSIG @ 350 DEG. F, 200 PSIG @ 150 DEG. F, Includes corrosion allowance of 0.050" min.

CONSTRUCTION:
Screwed for 1 1/2" and smaller, welded and/or flanged for 2" and larger.

PIPE:
Carbon steel, ASTM A53, Grade B: Threaded, schedule 80, seamless, 1 1/2" and smaller, plain end, schedule 40, seamless, 2" to 10", Plain end, 3/8" wall, seamless, 12" and above.

FITTINGS:
3000 lb ANSI B16.11, forged steel, threaded ends, 1 1/2" and smaller. Schedule 40, ANSI B16.9, ASTM A234, Grade WPB, carbon steel, butt welding ends, 2"-12". 3/8" wall, ANSI B16.9, ASTM A234, Grade WPB, carbon steel, butt welding ends, 14" to 24", or 125# flanged cast iron elbows and tees, ASTM A126, Class B with 125# ANSI B16.1 drilling with dimensions per ANSI A21.10 (AWWA C110). Location of tapped holes for drains shall be in accordance with ANSI B16.1. Use thread-o-lets on branch connections 1-1/2" and smaller, use stub-in or reducing tee connections for 2" and above.

UNIONS:
3000 lb forged steel, ASTM A105, Grade 2, integral steel seat, ground joint, threaded ends.

FLANGES:
150 lb ANSI B16.5, ASTM A105 forged carbon steel, slip-on, weld neck, or MSS lap joint/stub end for 2" and larger, threaded 1 1/2" and smaller. Where bolting to flat face cast iron flanges, flanges shall be furnished with a flat face. Others shall be raised face.

ORIFICE FLANGES:
Instrument item.

BOLTING:
See Fastener Specification F03 for Bolts, and F20 for Studs.

Issue Date: 12/01/89 Revision Date: 06/11/99

Approved by Matthew R. McGowan on 04/04/2000

CALGON CARBON CORPORATION	CARBON STEEL PIPE MATERIAL SPECIFICATION	SPEC NO:
	GALVANIZED CARBON STEEL PIPE	C13

MATERIAL: Galvanized carbon steel pipe with galvanized iron or steel fittings.

RATING: 300 PSIG @ -20 to 150 DEG. F
150 PSIG @ 350 DEG. F Includes corrosion allowance of 0.050" minimum.

CONSTRUCTION: Screwed 3" and smaller
No bending permitted

PIPE: Galvanized carbon steel, ASTM A120:
Threaded, schedule 40, butt welded seam 2" and smaller.
Threaded schedule 40, butt welded seam or seamless, 2 1/2" and 3".

FITTINGS: 150 lb., ANSI B16.3, ASTM A197, galvanized malleable iron, banded, threaded ends.

UNIONS: 150 LB., ASTM A197, galvanized malleable iron, integral iron seat, ground joint, threaded ends.

FLANGES: 150 lb., ANSI B16.5, ASTM A105, Grade 1, galvanized forged carbon steel, threaded.

Where bolting to flat face cast iron flanges, steel flanges shall be furnished with a flat face. Others shall be raised face

ORIFICE FLANGES: Instrument item.

BOLTING: See attached Fastener Specification F03.

Issue Date: 12/01/89 Revision Date: 04/10/92

Approved by Joseph P. McMahon on 07/24/98

CALGON CARBON CORPORATION	FASTENER MATERIAL SPECIFICATION	SPEC NO:
		F03

MATERIAL:
Hex Bolt, low or medium carbon steel, ASTM A307 Grade B.
1/4" through 4" Proof load 55,000 psi.
1/4" through 4" Tensile strength: 60,000 psi minimum, 100,000 psi maximum.
Zinc plated.
Threads to be UNC unless specified UNF bolts to include (1) heavy hex nut, ASTM A563, Grade A.

Issue Date: 01/01/89 Revision Date: 07/16/2001

Approved by Matthew R. McGowan on 07/16/2001

CALGON CALGON CARBON CORPORATION	FASTENER MATERIAL SPECIFICATION	SPEC NO:
		F20

MATERIAL: Stud bolts, alloy steel, ANSI B18.2, ASTM A193, Grade B7, with two heavy semi-finished hexagon 2H nuts per bolt, Zinc plated.

Issue Date: 07/10/91 Revision Date: 05/28/92

Approved by Matthew R. McGowan on 07/12/2001

CALGON CALGON CARBON CORPORATION	GASKET MATERIAL SPECIFICATION	SPEC NO:
	1/8" EPDM RUBBER	G-45

MATERIAL:	EPDM, Color: Black, 1/8" thick.
RATING:	Durometer (Shore A +/- 5): 60
MANUFACTURER:	Garlock or equal.
SIZES:	Pipe gasket flange dimension per ANSI B16.21
MODELS:	Garlock- 8314 or equal.

SERVICE CONDITIONS:
Temperature: -40 thru 300 degrees F. Pressure: 250 psig

Issue Date: 03/12/2008 Revision Date: 03/12/2008

Approved by Joseph P. McMahon on 03/12/2008

CALGON CALGON CARBON CORPORATION	LINED PIPE MATERIAL SPECIFICATION	SPEC NO:
	PLASTIC LINED STEEL PIPE WITH PLASTIC LINED FLANGED FITTINGS	L01

MATERIAL: Plastic lined steel pipe with plastic lined flanged fittings.

RATING: 150 PSIG @ minus 20 DEG. to plus 225 DEG. F.

CONSTRUCTION: Flanged 1" to 8", Dow Chemical Company's MORAF PPL brand piping system using polypropylene resin lined steel pipe and lined cast iron flanged fittings. Each spool piece and fitting to be furnished with ends of plastic liner formed over flanged ends to form a molded raised face.

PIPE: Schedule 40, ANSI B36.10, ASTM A53, steel pipe with lining.

FITTINGS: 125 lb., ANSI B16.1, ASTM A126, Class A, cast iron flanged with lining.

FLANGES: 125 lb., ANSI B16.1, ASTM A126, Class A, cast iron, threaded, flat face with smooth finish, drilled and chamfered.

BOLTING: See attached Fastener Specification F03.

FIELD FABRICATION: For piping not shop fabricated Contractor must have special tools and equipment to cut the lined pipe and form the molded raised face on the job. See Dow's Form 178-103 "Field Installation of Dow Plastic Lined Piping Products" for necessary equipment and instructions.

LINING: Thermally stabilized polypropylene resin.

Issue Date: 12/01/89 Revision Date:

Approved by Joseph P. McMahon on 07/24/98

CALGON CALGON CARBON CORPORATION	STAINLESS STEEL PIPE MATERIAL SPECIFICATION	SPEC NO:
	INSTRUMENT PIPING, HEAT TRACING, ETC.	S06

MATERIAL: Stainless steel tubing and flareless compression fittings, and stainless steel pipe and fittings.

RATING: 150 PSIG @ 365 DEG. F.
300 PSIG @ 100 DEG. F.

CONSTRUCTION: For tubing systems 1" and smaller. Pipe and screwed pipe fittings to be used for take-off connections on larger pipe, manifolding, connections to screwed instruments, equipment, etc. Tubing to be used for all other piping in the system.

PIPE NIPPLES: ASTM A312, Type 316, seamless, Schedule 80S, ANSI B36.19, annealed and pickled.

PIPE FITTINGS: Type 316 stainless steel screwed fittings, dimensions per ANSI B16.3, forged, wrought or cast material rated 150 lb. Camco Fittings Co., or equal.

TUBING: Type 316 stainless steel seamless tubing, 0.035" wall thickness, annealed and pickled, hardness 70-74 Rockwell "B", 1/4 O.D.

TUBE FITTINGS: Type 316 stainless steel, flareless compression fittings, Crawford Fitting Company "Swagelok", or equal.

Issue Date: 01/01/89 Revision Date:

Approved by Joseph P. McMahon on 07/24/98

	STAINLESS STEEL PIPE MATERIAL SPECIFICATION	SPEC NO:
CALGON CARBON CORPORATION	TYPE 316 STAINLESS STEEL PIPE AND FITTINGS	S15

MATERIAL: Type 316 stainless steel pipe and fittings.

RATING: 150 PSIG @ 365 DEG. F.
300 PSIG @ 100 DEG.F.

CONSTRUCTION: Screwed for 3" and smaller

PIPE: Threaded, Schedule 40S, ASTM A312, Type316, welded, ANSI B36.19, annealed and pickled.

FITTINGS: Type 316 stainless steel screwed fittings, general dimensions to conform to ANSI B16.3 for malleable iron screwed fittings. Forged, wrought or cast material rated 150 Lb. @ 365 DEG.F., Camco Fittings Co., or equal.

FLANGES: Type 316 stainless steel, threaded, MSS-SP-51, 150 Lb. flat face, serrated finish.

ORIFICE FLANGES: Instrument Item.

BOLTING: See attached Fastener Specification F03.

GASKETS: See attached Gasket Specification G02.

Issue Date: 12/01/89 Revision Date: 06/20/2001

Approved by Gerald Kirner on 06/21/2001

CALGON CARBON CORPORATION	STAINLESS STEEL PIPE MATERIAL SPECIFICATION	SPEC NO:
	TYPE 304L STAINLESS STEEL	S25

MATERIAL: Type 304L stainless steel.

RATING: 150 PSIG @ 500 DEG. F.

CONSTRUCTION: Flanged and welded for 2" and larger.
Threaded for 1 1/2" and smaller.

PIPE: Plain end, stainless steel pipe ASTM A-312, Grade TP 304L, welded, annealed and pickled. Pipe dimensions to conform with Schedule 10S, ANSI B36.19. For 1 1/2" and smaller, use SCH. 40.

FITTINGS: ASTM A-403, Grade WP 304L stainless steel, ANSI B16.9 butt weld, Schedule 10S ANSI wall thickness, for 2" and larger. For 1 1/2" and smaller use screwed fittings, Type 304L, dimensions per ANSI B16.3, forged, wrought or cast material rated 150 lb.

FLANGES: ASTM A-182 Grade F304 forged stainless steel,
150# ANSI B16.5, raised face slip-on or weld neck type. Where bolting to flat face flanges on instruments or equipment, flanges shall be furnished with a flat face.

ORIFICE FLANGES: Instrument Item.

BOLTING: See attached Fastener Specification F03.

GASKETS: See attached Gasket Specification G10 for 1/16", or G11 for 1/8".

Issue Date: 03/28/95 Revision Date:

Approved by Joseph P. McMahon on 07/24/98

	BUTTERFLY VALVES MATERIAL SPECIFICATION	SPEC NO:
CALGON CARBON CORPORATION	ONE-PIECE CAST IRON BUTTERFLY VALVE	3.44

MATERIAL: One-piece cast iron wafer style body, epdm or buna-n seat material, gasket type seal, torque plug connection, 416 stainless steel stem (or of greater corrosion resistance), bronze or aluminum bronze disc material, bronze upper and lower bushings. Lever operator for valve sizes 2" through 6", weatherproof worm gear wheel operator for sizes 8" through 12" (handwheel diameter shall not exceed 9"). Valves shall comply with section 5: Inspection Testing and Rejection of AWWA specification C-504-87 with one exception; test pressure shall be 200 psig.

RATING: 200 psig @ 180 Deg. F.

CONSTRUCTION: Shaft: 1 piece, through shaft construction.

MANUFACTURER: Centerline, Pratt, Xomox, Crane, Apollo, Sure-Seal, or equal.

SIZES: 2" through 12"

MODELS: Centerline Series 200, Pratt Series 396, Xomox Series 700, Crane Series 42, Apollo Series 141, Sure-Seal Series 600 or equal.

Issue Date: 10/29/92 Revision Date: 04/04/2007

Approved by Joseph P. McMahon on 04/05/2007

Spec. 3.44

CENTER LINE®

Resilient Seated Butterfly Valves

CRANE®

THE VALVE EXPERTS

Spec. 3.44

Center Line has been a market leader in quarter-turn valves for more than 40 years, and we have earned a reputation as a supplier of superior valves at competitive prices. Our goal is to exceed industry requirements and customer expectations.

We are committed to offering products that meet a wide range of applications and requirements. We continually improve our product line by introducing new products and enhancing existing designs, providing our customers with the best products on the market.

Our complete line of resilient seated butterfly valves provides you with the reliability you need, backed by the guarantee that comes with using valves designed and produced in company-owned manufacturing facilities.

Center Line Resilient Seated Butterfly Valves Product Features

- Qualified for both gaseous and liquid service
- Positive shut-off bi-directionally
- Phenolic backed cartridge seat
- Three-position PTFE bushing standard
- Locking handle standard
- End of line service optional
- Ease of automation
- Field repairable
- Complete size range: 2 through 48 inches

Typical Applications

- HVAC
- Chemical/ Petrochemical Processing
- Food and Beverage
- Power and Utilities
- Pulp and Paper

NOTE: In keeping with our policy of continuing improvement, we reserve the right to institute changes in design, material, dimensions, or specifications without notice and without incurring any obligation to make such changes and modifications on product previously or subsequently sold.

Spec. 3.44

Quality is designed into Series 200, 225, and 250 butterfly valves from Center Line. These valves feature a phenolic-backed cartridge seat and precision-machined parts to assure years of dependable operation.

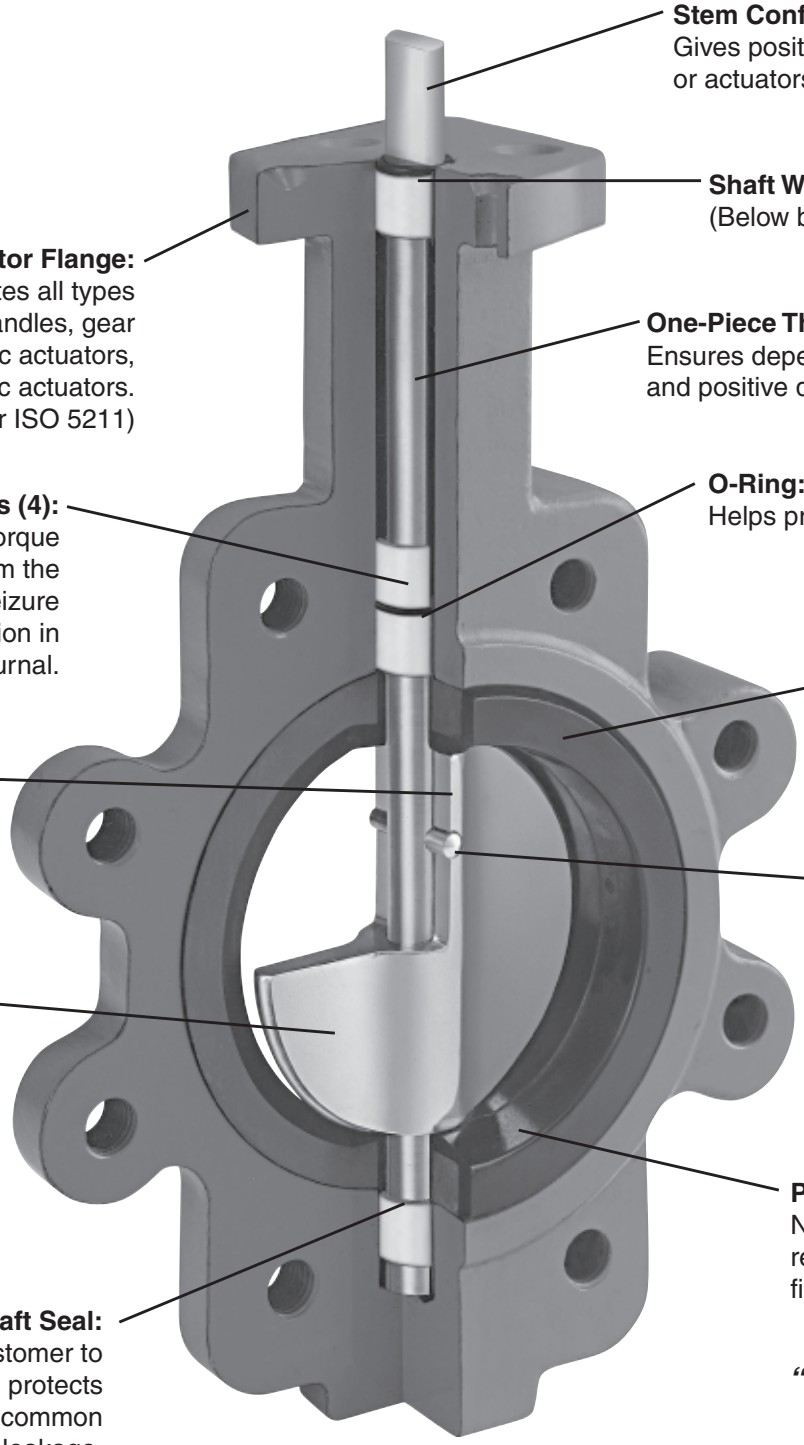

Stem Configuration:
Gives positive attachment for handles or actuators. (Double “D”, 2"-24")

Shaft Weather Seal:
(Below bushing on some models.)

Actuator Flange:
Accommodates all types of actuators: handles, gear operators, electric actuators, and pneumatic actuators. (2"-24" per ISO 5211)

One-Piece Thru Shaft:
Ensures dependability and positive disc positioning.

Bushings (4):
Stem bushing reduces torque and isolates the stem from the valve body, preventing seizure of the stem due to corrosion in the stem journal.

O-Ring:
Helps prevent stem leakage.

Seat Face:
Negates need for flange gaskets.

Smooth Finished Disc Flats:
These “mate” with seat flats to give a highly efficient seal; prevents leakage into shaft areas.

Precision Taper Pin (two pins on Series 225 and 250):
Ensure positive, vibration proof, shaft to disc connection. Field replaceable.

Precision Profile Disc:
Provides bubble-tight shut-off and assures minimum torque and longer seat life.

Phenolic Backed Seat:
Non-collapsible, stretch resistant, blow out proof, field replaceable.

Supported Shaft Seal:
Bonding of elastomer to phenolic backing ring protects against distortion, a common cause of shaft leakage.

“Representative Cutaway”

Spec. 3.44

- Available in sizes 2" to 48".
- Available in Wafer or Lug style body (2" to 30").
- Full flange style body for 36" to 48" valves.
- Wafer body features four alignment holes.
- Pressure ratings for tight shut-off at temperatures up to the maximum limit of the seat material:
  - 2" to 12" — 200 psi, 125 psi for PTFE seat.
  - 14" to 48" — 150 psi.
- Ideal for on-off or throttling services.
- Available with handles (2" to 12"), manual gear operators (2" to 48"), and electric or pneumatic actuators (2" to 48").
- Refer to Crane automation bulletin for details of pneumatic and electric actuators.
- Designed to comply with MSS SP-67.
- Compatible with ASME 125/150 flanges.
- Valves 2" to 20" meet the intent and have passed the AWWA C-504-87 Section 5 proof of design tests.
- Type approval certification from ABS for marine applications (2" to 14").
- Bi-directional dead-end capability to 200 psi (2" to 12") and 150 psi (14" to 24") is standard on lug valves.
- Operators mounted perpendicular to pipe.
- For bolting information, consult the Center Line Installation and Maintenance Manual.
- Vacuum Service Rating: zero leakage at 24" of mercury.
- Commercial cleaning available for non-silicone and O_2 service.

Valve Seating Torques (In-Lbs.) 2" to 30"

Valve Size	Standard Disc Differential Pressure								Undercut Diff. Press.	
	50 PSI ΔP Bushing		100 PSI ΔP Bushing		150 PSI ΔP Bushing		200 PSI ΔP Bushing		75 PSI ΔP Bushing	
	Bronze	PTFE	Bronze	PTFE	Bronze	PTFE	Bronze	PTFE	Bronze	PTFE
2"	106	100	117	106	129	111	140	117	-	-
2 1/2"	152	150	166	163	181	176	195	189	-	-
3"	213	207	230	220	248	232	265	244	-	-
4"	321	290	386	323	450	357	515	390	-	-
5"	481	423	598	481	715	540	832	598	-	-
6"	692	599	878	691	1,063	783	1,248	875	-	-
8"	1,326	1,060	1,716	1,183	2,106	1,307	2,496	1,430	1,124	819
10"	2,239	1,671	3,010	1,872	3,780	2,074	4,550	2,275	1,363	909
12"	3,959	2,568	4,953	2,795	5,948	3,023	6,942	3,250	2,457	1,445
14"	4,881	2,640	6,226	3,070	7,570	3,500	-	-	4,400	2,300
16"	7,020	4,260	8,580	4,880	10,140	5,500	-	-	5,900	3,600
18"	10,105	6,287	12,202	7,243	14,300	8,200	-	-	8,300	5,500
20"	13,923	8,360	16,582	9,180	19,240	10,000	-	-	11,100	6,700
24"	23,617	15,427	26,953	16,813	30,290	18,200	-	-	17,300	12,100
30"	39,721	27,313	43,391	29,407	47,060	31,500	-	-	27,300	21,100

Valve Seating Torques (In-Lbs.) 28" to 48" Double Flanged

Valve Size	Standard Disc Differential Pressure		
	50 PSI Wet / Dry	100 PSI Wet / Dry	150 PSI Wet / Dry
28"	23,718	26,639	28,957
30"	28,320	30,860	33,338
32"	32,418	35,073	38,126
36"	40,622	43,480	46,524
40"	68,924	74,048	78,995
42"	69,747	74,632	79,862
48"	96,598	103,837	111,112

All torques shown in these charts were derived from test data using water at 60°F. For torques using dry gases, multiply these numbers by 2.0. For torques involving other media, please consult the factory.

There is no safety factor included in the numbers shown on these charts. For actuator sizing, Crane recommends that these values be multiplied by 1.5 for single valve applications, or 2.0 for 3-way ("tee") applications.

For PTFE seats multiply the numbers shown by 2.0.

Under certain conditions, hydrodynamic torque can meet or exceed seating and unseating torques. When designing valve systems, hydrodynamic torque must be considered to help assure correct selection for the application.

T: 936-588-8380 • F: 936-588-8381 • www.cranevalve.com

Spec. 3.44

Seat Temperature Ratings

Material	Temperature Ratings °F
Buna-N	+10 to 180
Abrasive Resistant Buna-N	+10 to 180
Neoprene	+20 to 200
EPDM (2"- 16")	-30 to 275
EPDM (18" & Above)	-30 to 225
EPDM, Food Grade (2" - 12")	-30 to 225
Hypalon	0 to 275
Viton	+10 to 275
High Temp. Viton	+10 to 400
PTFE over Buna-N (125 psi, 2" - 12")	+40 to 250
PTFE over Buna-N (75 psi, 2" -12")	+40 to 275

Although elastomers have an effective operating temperature range, when used in valves, these ranges may have to be modified. The temperature ranges shown in the table have been adjusted accordingly.

For Low Temperature: While the seat materials selected for use in Center Line butterfly valves are capable of withstanding lower temperatures without damage, the durometer of the elastomer is changed. This "hardening" of the seat may increase the operating torque beyond the structural limits of the stem and/or the disc to stem configuration.

For High Temperature: When using High Temperature Viton, the operating pressure of the valve is reduced above 275°F.

C_V Values – Valve Sizing Coefficients (US-GPM @ 1ΔP) 2" to 48"

Size	10°	20°	30°	40°	50°	60°	70°	80°	90°
2"	0.06	3	7	15	27	44	70	105	115
2 1/2"	0.10	6	12	25	45	75	119	178	196
3"	0.20	9	18	39	70	116	183	275	302
4"	0.30	17	36	78	139	230	364	546	600
5"	0.50	29	61	133	237	392	620	930	1022
6"	0.80	45	95	205	366	605	958	1437	1579
8"	2	89	188	408	727	1202	1903	2854	3136
10"	3	151	320	694	1237	2047	3240	4859	5340
12"	4	234	495	1072	1911	3162	5005	7507	8250
14"	6	338	715	1549	2761	4568	7230	10844	11917
16"	8	464	983	2130	3797	6282	9942	14913	16388
18"	11	615	1302	2822	5028	8320	13168	19752	21705
20"	14	791	1647	3628	6465	10698	16931	25396	27908
24"	22	1222	2587	5605	9989	16528	26157	39236	43116
28"	36	1813	3639	6636	10000	14949	22769	34898	49500
30"	37	2080	4406	9546	17010	28147	44545	66818	73426
32"	45	2387	4791	8736	13788	20613	31395	48117	38250
36"	260	3050	6730	12740	20220	32500	52500	79600	87500
40"	84	4183	8395	15307	24159	36166	55084	84425	119750
42"	350	4095	9040	17108	27150	43640	70500	106890	117500
48"	455	5365	11840	22400	30600	51200	92300	140000	154000

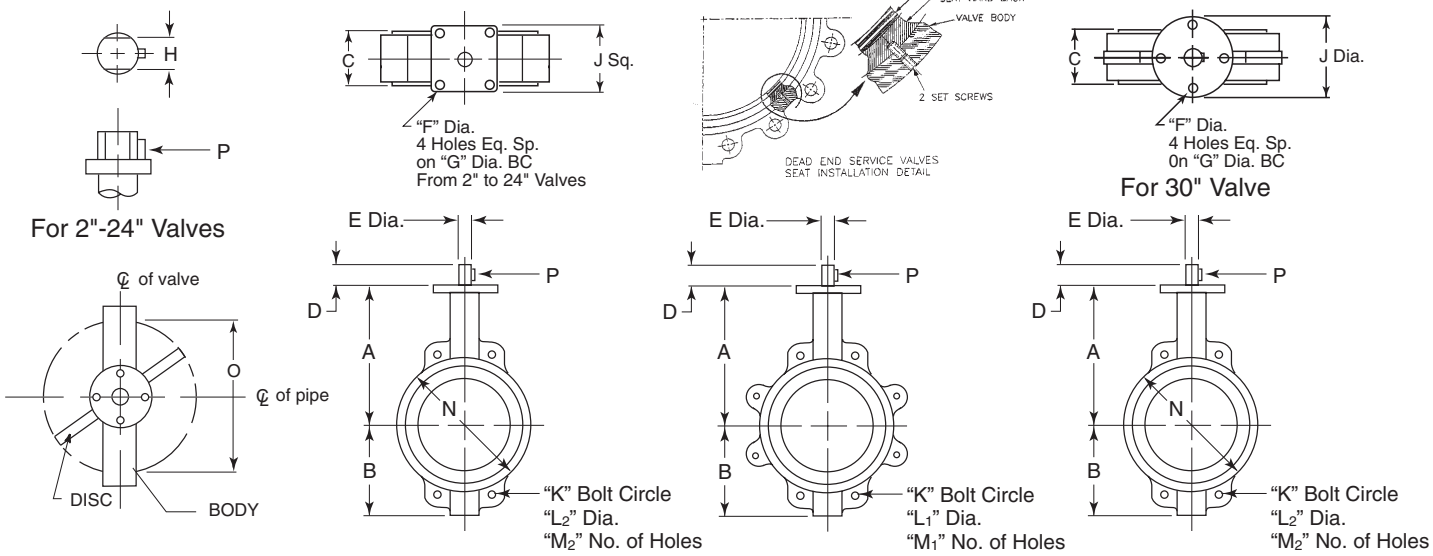

Dimensions 2" - 30"

Inches / mm	A	B	C	D	E	F	G	H	J	K	L_1	L_2	M_1	M_2	N	O	P
2"	6 3/8	3 1/4	1 3/4	1 1/4	1/2	3/8	2.76	0.39	2 3/4	4 3/4	5/8-11	11/16	4	4	4.	1.26	Wooduff #3
50	161.93	82.55	44.45	31.75	12.70	9.53	70	10	69.85	120.65		17.46			101.60	32.0	
2 1/2"	6 7/8	3 3/4	1 7/8	1 1/4	1/2	3/8	2.76	0.39	2 3/4	5 1/2	5/8-11	11/16	4	4	4 3/4	1.83	Wooduff #3
65	174.63	95.25	47.63	31.75	12.70	9.53	70	10	69.85	139.70		17.46			120.65	46.5	
3"	7 1/8	4	1 7/8	1 1/4	1/2	3/8	2.76	0.39	2 3/4	6	5/8-11	11/16	4	4	5 1/8	2.54	Wooduff #3
75	180.98	101.60	47.63	31.75	12.70	9.53	70	10	69.85	152.40		17.46			130.18	64.5	
4"	7 7/8	4 7/8	2 1/8	1 1/4	5/8	3/8	2.76	0.47	2 3/4	7 1/2	5/8-11	11/16	8	4	6 3/4	3.54	Wooduff #9
100	200.03	123.83	53.98	31.75	15.88	9.53	70	12	69.85	190.50		17.46			171.45	89.9	
5"	8 3/8	5 3/8	2 1/4	1 1/4	3/4	3/8	2.76	0.55	2 3/4	8 1/2	3/4-10	13/16	8	4	7 3/4	4.36	Wooduff #9
125	212.73	136.53	57.15	31.75	19.05	9.53	70	14	69.85	215.90		20.64			196.85	110.7	
6"	8 7/8	5 7/8	2 1/4	1 1/4	3/4	3/8	2.76	0.55	2 3/4	9 1/2	3/4-10	13/16	8	4	8 5/8	5.72	Wooduff #9
150	225.43	149.23	57.15	31.75	19.05	9.53	70	14	69.85	241.30		20.64			219.08	145.3	
8"	10 1/4	7 3/4	2 1/2	1 3/4	7/8	7/16	4.02	0.67	3 3/4	11 3/4	3/4-10	13/16	8	4	10 9/16	7.6	Wooduff #9
200	260.35	196.86	63.50	44.45	22.23	11.11	102	17	95.33	298.45		20.64			268.29	193.0	
10"	11 1/2	8 1/4	2 3/4	1 3/4	1 1/8	7/16	4.02	0.87	3 3/4	14 1/4	7/8-9	15/16	12	4	13 1/16	9.5	Wooduff #15
250	292.10	209.55	69.85	44.45	28.58	11.11	102	22	95.33	361.95		23.81			331.79	241.3	
12"	13 1/4	9 3/4	3 1/8	1 3/4	1 1/4	7/16	4.02	0.95	3 3/4	17	7/8-9	15/16	12	4	16 1/8	11.45	Wooduff #15
300	336.55	247.65	79.38	44.45	31.75	11.11	102	24	95.33	431.80		23.81			409.58	290.8	
14"	14 1/2	11	3 1/8	1 3/4	1 1/4	7/16	4.02	0.95	3 3/4	18 3/4	1-8	1 1/16	12	4	17 1/8	12.78	Wooduff #15
350	368.30	279.40	79.38	44.45	31.75	11.11	102	24	95.33	476.25		26.99			434.98	324.6	
16"	15 3/4	12	3 1/2	2	1 5/16	7/8	6.50	1.06	6 1/2	21 1/4	1-8	1 1/16	16	4	20	14.97	5/16" Sq. x 1 3/4"
400	400.05	304.80	88.90	50.80	33.34	22.23	165	27	165.10	539.75		26.99			508.00	380.2	
18"	16 5/8	15	4 1/4	2	1 1/2	7/8	6.50	1.06	6 1/2	22 3/4	1 1/8 - 7	1 1/4	16	4	21 3/8	16.83	3/8" Sq. x 1 1/2"
450	422.28	381.00	107.95	50.80	38.10	22.23	165	27	165.10	577.85		31.75			542.93	427.5	.
20"	18 7/8	14 5/8	5 1/4	2 1/2	1 5/8	7/8	6.50	1.26	6 1/2	25	1 1/8 - 7	1 1/4	20	4	23 5/16	18.67	3/8" Sq. x 1 3/4"
500	479.43	371.48	133.35	63.50	41.28	22.23	165	32	165.10	635.00		31.75			592.14	474.2	
24"	22 1/8	18	6 1/8	2 3/4	2	7/8	6.50	1.42	6 1/2	29 1/2	1 1/4 - 7	1 1/4	20	4	27 7/8	22.62	1/2" Sq. x 2 1/4"
600	561.98	457.20	155.58	69.85	50.80	22.23	165	36	165.10	749.30		31.75			708.03	574.5	
30"	25 1/2	24 1/4	6 3/4	3 1/4	2 1/2	7/8	8 1/2	N/A	11 1/4	36	1 1/4 - 7	1 1/4	28	4	34 3/8	28.6	5/8" Sq. x 2 5/8"
750	647.70	615.95	171.45	82.55	63.50	22.23	215.90		285.75	914.40		31.75			873.13	726.4	

L_1 and M_1 refer to Lug style valves, L_2 and M_2 refer to Wafer Style. "C" dimension is listed with elastomer in the relaxed condition. Approximately 1/8" total compression is required for proper sealing with pipe flanges. Valves are designed for installation between ASME B16.1 Class 125 (Iron) and B16.5 Class 150 (Steel) flanges. Gaskets are not needed, and should not be used since the seat face seals against the mating flange. If the valve is to be installed in plastic or fiberglass flanges, flange rings, or Van Stone style flanges, consult your Center Line agent or the factory for additional information. Center Line recommends that a blind flange be used on end of line applications.

Consult factory for dimension to 2 1/2" and 5" PTFE seated valves. "O" dimension is the valve clearance dimension.

Spec. 3.44

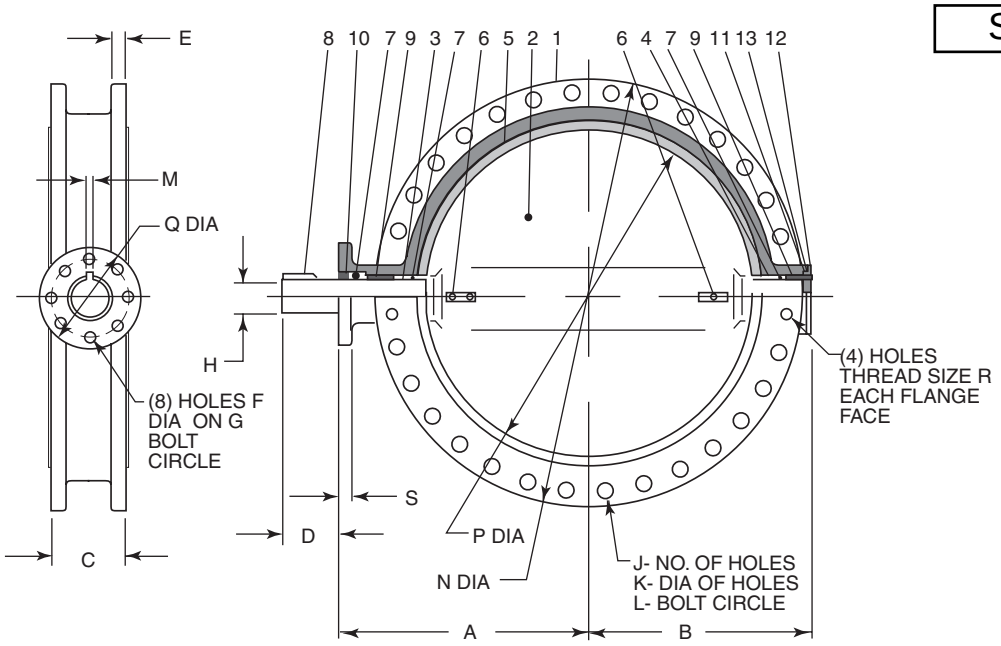

*Dimensions 28" - 48" Double Flanged

		A	B	C	D	E	F	G	H	J	K	L	M	N	P	Q	R	S
28	in	20.8	25	6.6	3.3	2.2	0.7	10	2.5	24	1.4	34.5	0.7 Sq.	37.1	27.8	11.8	1.25 - 7	1.3
	mm	520	624	165	85	54	18	254	63.4	24	35	863.4	18 Sq.	927.1	695	300	–	33
30	in	26.4	22.4	6.7	3.4	2.2	0.7	10	2.5	24	1.4	36.6	0.7 Sq.	39.4	29.8	11.8	1.25 - 7	1.1
	mm	660	560	167	86	54	18	254	63.4	24	35	914.4	18 Sq.	984	744	300	–	28
32	in	23.6	26.9	7.6	3.3	2.4	0.7	10	2.5	24	1.6	39.1	0.8 Sq.	42.4	31.8	11.8	1.5 - 6	1.3
	mm	591	672	190	85	60.3	18	254	63.4	24	41.3	977.9	20 Sq.	1060.4	795	300	–	33
36	in	28.8	25.8	8.1	4.6	2.4	0.7	10	3	28	1.6	43.4	0.8 Sq.	47	34.0	11.8	1.5 - 6	1.3
	mm	720	656	203	118	60.3	18	254	75	28	41.3	1085.8	20 Sq.	1169	864.7	300	–	33
40	in	28.8	32	8.7	5.1	2.4	0.7	10	3.3	32	1.6	48	0.9 Sq.	51.6	38.6	11.8	1.5 - 6	1.5
	mm	721	800	218	130	60.3	18	254	85	32	41.3	1200.1	22 Sq.	1289	965	300	–	38
42	in	34.3	30.6	10	5.9	2.6	0.7	10	3.3	32	1.6	49.4	0.9 Sq.	53	40.5	11.8	1.5 - 6	1.4
	mm	858	777.2	251	150	66	18	254	85	32	41.3	1257.3	22 Sq.	1346	1030	300	–	35
48	in	37.6	34	10.9	5.9	2.8	0.9	11.7	4.1	40	1.6	56	1.1 Sq.	59.5	45.7	13.8	1.5 - 6	1.5
	mm	941	864	276.4	150	70	22	298	105	40	41.3	1422.4	28 Sq.	1511	1160	350	–	38

* Please note that dimensions apply to standard product only. For custom/domestic product dimensions, please consult factory.

Weights 2" - 48" – lbs (kg)

	2"	2 1/2"	3"	4"	5"	6"	8"	10"	12"	14"	16"	18"	20"	24"	28"	30"	32"	36"	40"	42"	48"
Wafer	6 (2.7)	7 (3.2)	10 (4.5)	13 (5.9)	18 (8.2)	20 (9.1)	32 (14.5)	42 (19.1)	70 (31.7)	95 (43.1)	117 (53.1)	165 (74.8)	275 (124.7)	440 (199.6)	–	740 (335.7)	–	1660 (754)	–	2145 (975)	3023 (1374)
Lug	7 (3.2)	8 (3.6)	14 (6.4)	26 (11.8)	28 (12.7)	31 (14.1)	49 (22.2)	72 (32.7)	105 (47.6)	155 (70.3)	195 (88.5)	230 (104.3)	396 (179.6)	610 (276.7)	–	1050 (476.3)	–	–	–	–	–
Flanged	– –	– –	– –	– –	– –	– –	– –	– –	– –	– –	– –	– –	– –	– –	1173 (533)	1173 (533)	1525 (693)	1949 (886)	2141 (973)	2495 (1134)	3711 (1687)

NOTE: TECHNICAL DATA SUBJECT TO CHANGE WITHOUT NOTICE.

Spec. 3.44

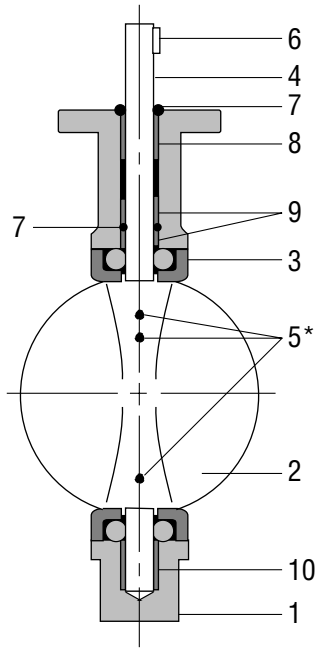

Sizes 2"-30"
*Quantity of 3 pins required for sizes 30" and above

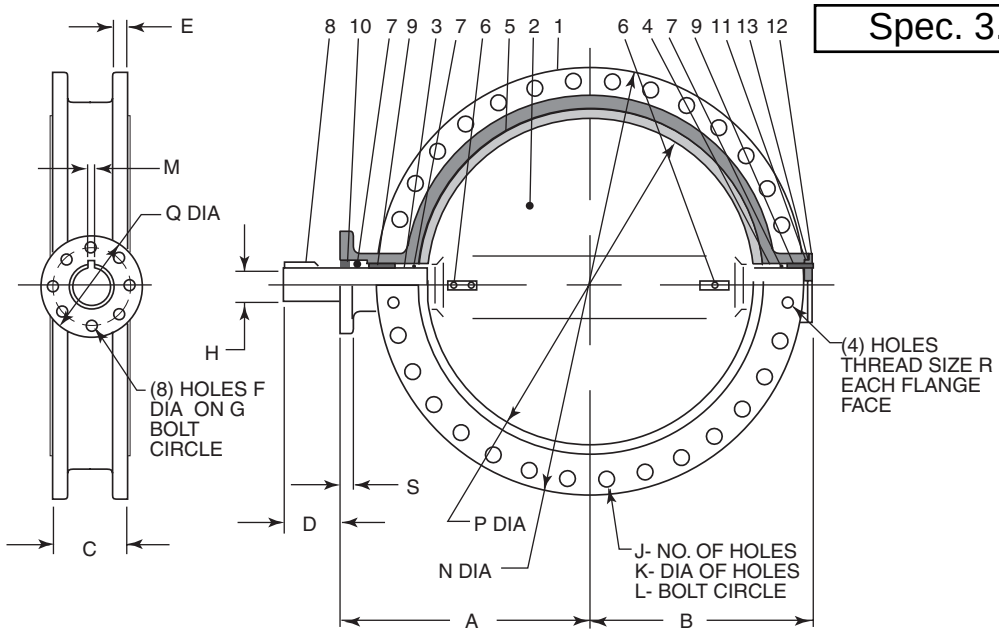

Sizes 36"-48"

Bill of Materials 2" - 30"

Item	Description	Materials	Optional Materials
1	Body	Cast Iron	Ductile Iron
2	Disc	Ductile Iron†	Aluminum Bronze, 316 SS, Monel
3	Seat	Buna-N or EPDM	Neoprene, Hypalon, Viton, PTFE, FDA, Abrasion Resistant
4	Shaft	416 Stainless Steel	316 Stainless Steel, Monel
5	Taper Pin	300 Series Stainless	Monel
6	Key	Carbon Steel	No Option Available
7	O-Ring	Buna-N	No Option Available
8	Bushing	PTFE	Luberized Bronze
9	Bushing	PTFE	Luberized Bronze
10	Bushing	PTFE	Luberized Bronze

†ENP plated for 2"-12" valves

Bill of Materials 36" - 48"

Item	Description	Materials	Optional Materials
1	Body	Ductile Iron	No Option Available
2	Disc	Ductile Iron	Aluminum Bronze, 316 Stainless Steel, Monel
3	Upper Shaft	416 Stainless Steel	316 Stainless Steel, Monel
4	Lower Shaft	416 Stainless Steel	316 Stainless Steel, Monel
5	Seat	Buna-N or EPDM	Hypalon, Viton
6	Taper Pin	300 Series Stainless	Monel
7	O-Ring	Buna-N	No Option Available
8	Key	Carbon Steel	No Option Available
9	Bushing	Luberized Bronze	No Option Available
10	Bushing	Luberized Bronze	No Option Available
11	Thrust Washer	Luberized Bronze	No Option Available
12	End Plate	Ductile	No Option Available
13	O-Ring	Buna-N	No Option Available

T: 936-588-8380 • F: 936-588-8381 • www.cranevalve.com

Spec. 3.44

Gear operators can be used for on/off and throttling control of Center Line resilient seated butterfly valves. All models are weatherproof and usable for above ground or buried service. For manual operation of valves, gear operators are required for valves 14" and larger and are recommended for valves 8" and larger.

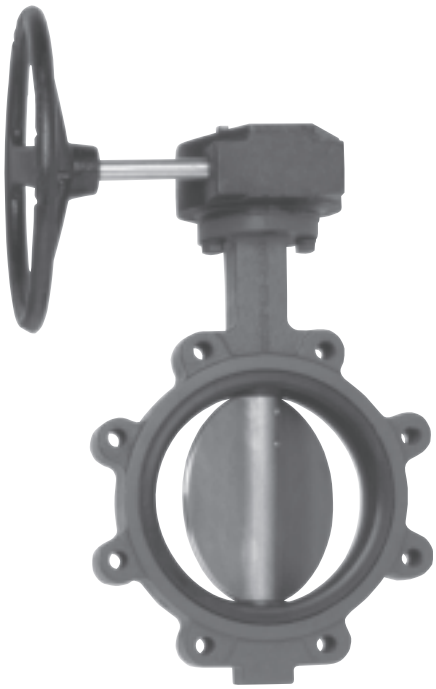

Features

Gear operators from Center Line are 90° manual actuators, and they come with a handwheel, chainwheel, or square nut input device. The durable housing completely encloses the worm gear (on the input shaft) and the segment gear (on the output). Adjustable stops are standard and factory set when installed at the factory. Fully adjustable memory stops are available as an option. A position indicator is standard on all models for above ground service. An optional version is available for buried service applications. Contact customer service for more information.

Specifications

Operation Handwheel or chainwheel (12" standard, others available) or 2" square nut. Input shaft extension available.

Mounting Available with bolt patterns and bore/keyway for direct mount to all 2" through 30" Center Line resilient seated butterfly valves. Dual bolt patterns accommodate different pad designs.

Dimensions and Weights

Valve Size		Oper.	A	A1	C	E	F	G	H	∅1	J	∅K	M	D	P	Q	∅	∅D2	∅3	Wt.
2–6	in.	XJ30	12.56	9.52	10.72	2.52	14.80	2.36	6.00	0.76	1.36	0.24	1.66	3.68	3.36	7.06	12.00	6.08	1.52	27.1
50–150	mm		314.00	238.00	268.00	63.00	37.00	59.00	150.00	19.00	34.00	6.00	41.50	92.00	84.00	176.50	300.00	152.00	38.00	12.3
8–14	in.	XJ50	12.28	9.04	10.60	3.12	1.54	2.74	5.12	0.76	1.36	0.24	1.53	5.60	3.36	7.90	12.00	6.48	1.52	31.7
200–350	mm		307.00	226.00	265.00	78.00	38.50	68.50	128.00	19.00	34.00	6.00	38.20	140.00	84.00	197.50	300.00	162.00	38.00	14.4
16–18	in.	XJ80	16.28	11.08	13.76	4.80	1.60	4.08	5.60	1.00	1.36	0.32	2.28	7.88	5.00	11.60	18.00	10.40	2.00	77.4
400–450	mm		407.00	277.00	344.00	120.00	40.00	102.00	140.00	25.00	34.00	8.00	57.00	197.00	125.00	290.00	450.00	260.00	50.00	35.2

Valve Size		Oper.	A	B	C	D	E	F	∅	∅1	∅2	Wt.
20	in.	XJ300	7.40	6.40	4.40	18.90	4.60	2.50	18.00	0.98	0.32	121.0
500	mm		185.00	160.00	110.00	473.00	115.00	63.00	450.00	25.00	8.00	55.0
24	in.	XJ300	7.40	6.40	5.00	20.00	4.80	2.50	18.00	0.98	0.32	132.0
600	mm		185.00	160.00	125.00	500.00	120.00	63.00	450.00	25.00	8.00	60.0
30	in.	BA800	10.60	6.60	6.40	21.80	5.12	3.12	18.00	0.98	0.32	198.0
750	mm		265.00	165.00	160.00	545.00	128.00	78.00	450.00	25.00	8.00	90.0
32	in.	3D-60	9.72	6.92	6.48	21.20	6.56	3.52	17.40	0.98	0.32	292.6
800	mm		243.00	173.00	162.00	530.00	164.00	88.00	435.00	25.00	8.00	133.0
36	in.	3D-120	11.12	8.04	7.84	21.44	10.32	5.04	17.40	0.98	0.32	424.6
900	mm	1200	278.00	201.00	196.00	611.00	258.00	126.00	435.00	25.00	8.00	193.0
42	in.	3D-120	16.72	10.20	9.60	25.56	12.40	5.04	17.40	0.98	0.32	792.0
1050	mm	1500	418.00	255.00	240.00	611.00	310.00	126.00	435.00	25.00	8.00	360.0
48	in.	3D-120	16.72	10.20	9.60	25.56	12.40	5.04	17.40	0.98	0.32	792.0
1200	mm	1500	418.00	255.00	240.00	639.00	310.00	126.00	435.00	25.00	8.00	360.0

XJ30–50–80

Spec. 3.44

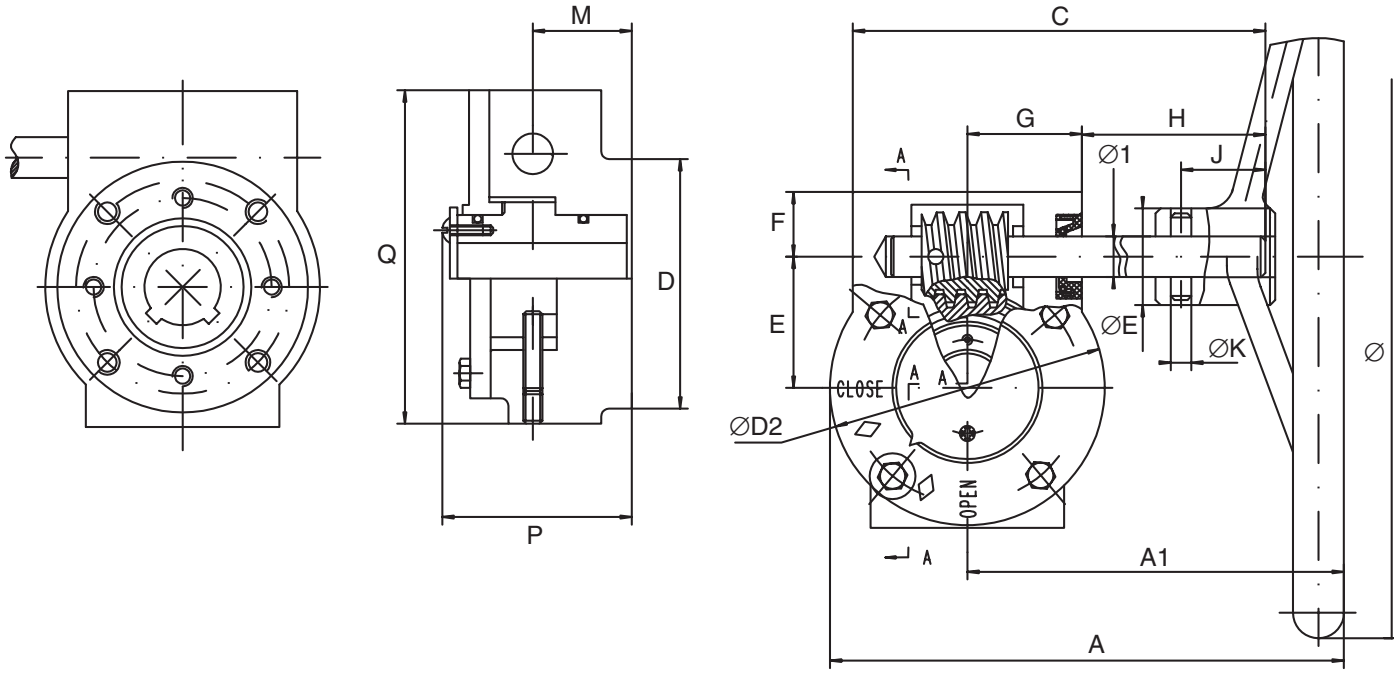

XJ300–BA800–3D-60–3D-120

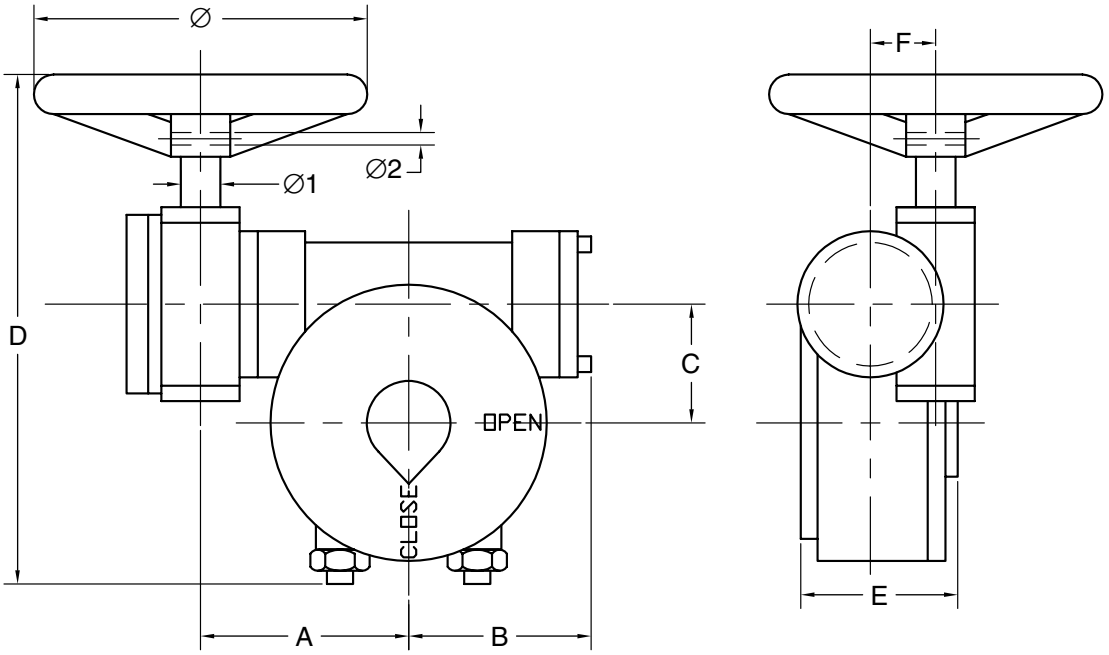

Spec. 3.44

Gear Operator Drilling Patterns

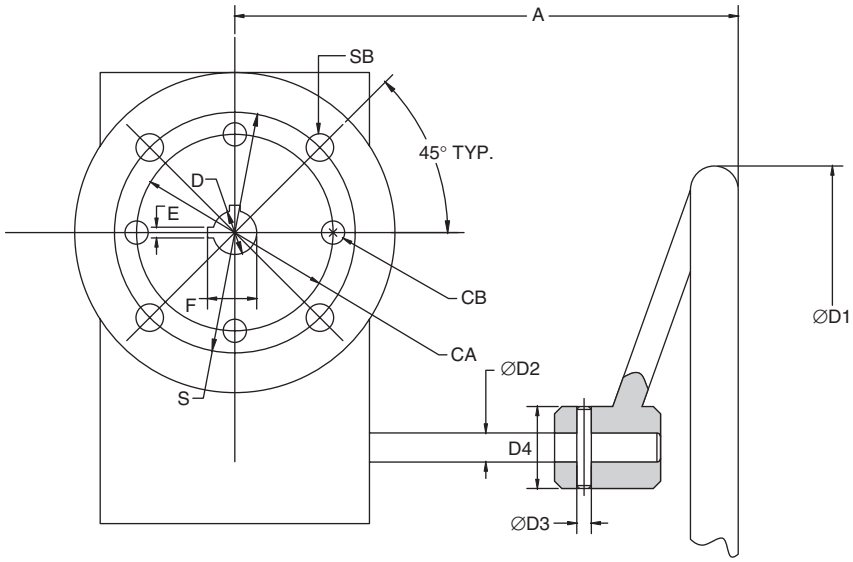

Dimensions

Valve Size	Operator Model	CA	CB	SA	SB	D	D1	D2	D3	D4	A	E	F
2 in.	XJ30	2.25		2.76		0.50	11.81	0.75	0.24	1.50	9.37	0.13	0.56
50 mm		57.15	M6-1	70.00	M8-1.25	12.70	300.00	19.00	6.00	38.00	238.00	3.18	14.30
3 in.	XJ30	2.25		2.76		0.50	11.81	0.75	0.24	1.50	9.37	0.13	0.56
75 mm		57.15	M6-1	70.00	M8-1.25	12.70	300.00	19.00	6.00	38.00	238.00	3.18	14.30
4 in.	XJ30	2.75		2.76		0.63	11.81	0.75	0.24	1.50	9.37	0.13	0.72
100 mm		69.85	M8-1.25	70.00	M8-1.25	15.90	300.00	19.00	6.00	38.00	238.00	3.18	18.30
5 in.	XJ30	2.75		2.76		0.75	11.81	0.75	0.24	1.50	9.37	0.13	0.84
125 mm		69.85	M8-1.25	70.00	M8-1.25	19.05	300.00	19.00	6.00	38.00	238.00	3.18	21.40
6 in.	XJ30	2.75		2.76		0.75	11.81	0.75	0.24	1.50	9.37	0.13	0.84
150 mm		69.85	M8-1.25	70.00	M8-1.25	19.05	300.00	19.00	6.00	38.00	238.00	3.18	21.40
8 in.	XJ50	3.50		4.02		0.87	11.81	0.75	0.24	1.50	8.89	0.19	0.97
200 mm		88.90	M12-1.75	102.00	M10-1.5	22.20	300.00	19.00	6.00	38.00	226.00	4.76	24.50
10 in.	XJ50	3.50		4.02		1.13	11.81	0.75	0.24	1.50	8.89	0.25	1.25
250 mm		88.90	M12-1.75	102.00	M10-1.5	28.60	300.00	19.00	6.00	38.00	226.00	6.35	31.80
12 in.	XJ50	4.25		4.02		1.25	11.81	0.75	0.24	1.50	8.89	0.25	1.39
300 mm		107.95	M12-1.75	102.00	M10-1.5	31.80	300.00	19.00	6.00	38.00	226.00	6.35	35.00
14 in.	XJ50	4.25		4.02		1.25	11.81	0.75	0.24	1.50	8.89	0.25	1.39
350 mm		107.95	M12-1.75	102.00	M10-1.5	31.80	300.00	19.00	6.00	38.00	226.00	6.35	35.00
16 in.	XJ80	6.25		6.50		1.31	18.00	0.98	0.32	1.99	10.90	0.31	1.49
400 mm		158.75	M18-2.5	165.00	M20-2.5	33.30	450.00	25.00	8.00	50.00	277.00	7.90	37.30
18 in.	XJ80	6.25		6.50		1.50	18.00	0.98	0.32	1.99	10.90	0.38	1.69
450 mm	(42/44)	158.75	M18-2.5	165.00	M20-2.5	38.10	450.00	25.00	8.00	50.00	277.00	9.53	42.80
18 in.	XJ300	6.25		6.50		1.63	18.00	0.98	0.32	1.99	12.64	0.38	1.81
450 mm	(21/23)	158.75	M18-2.5	165.00	M20-2.5	41.30	450.00	25.00	8.00	50.00	321.00	9.53	46.00
20 in.		6.25		6.50		1.63	18.00	0.98	0.32	1.99	12.64	0.38	1.81
500 mm	XJ300	158.75	M18-2.5	165.00	M20-2.5	41.30	450.00	25.00	8.00	50.00	321.00	9.53	46.00
24 in.	XJ300	8.50		6.50		2.00	18.00	0.98	0.32	1.99	13.19	0.50	2.24
600 mm	(42/44)	215.90	M20-2.5	165.00	M20-2.5	50.80	450.00	25.00	8.00	50.00	335.00	12.70	56.80
24 in.	XJ300	8.50		6.50		2.00	18.00	0.98	0.32	1.99	13.19	0.50	2.24
600 mm	(21/23)	215.90	M20-2.5	165.00	M20-2.5	50.80	450.00	25.00	8.00	50.00	335.00	12.70	56.80

Series 200

1	1	2	3	4	5	6	7	8	9	—	10

1. Size	Code
2"	02
2.5"	25
3"	03
to	
48"	48

2. Series/Style	Code
Wafer (2"-30")	A
Lug (2"-30")	B
Lug/Deadend (2"-30")	C
Flange (36"-48")	D

3. Body	Code
Epoxy Coated CI (A536) (2"-12")	S
Epoxy Coated DI (A536) (2"-12")	V
Cast Iron (2"-30")	1
Ductile Iron (A536)	2
Ductile Iron (A395)	G

4. Pressure	Code
200 PSI (2"-12")	0
75 PSI Undercut	3
150 PSI (14"-42")	6
125 PSI (PTFE seat) (2"-12")	8

5. Disc	Code
Ductile Iron-ENP (2"-12")	2
316 SS	4
Ductile Iron (14"-42")	5
Aluminum Bronze (2"-42")	6
Monel 400	7

6. Shaft	Code
416 SS	1
316 SS*	4
Monel 400	7
17-4 PH	9

*Standard with 316SS Disc only

7. Bushing	Code
Bronze	0
PTFE	3

8. Seat/Liner	Code
Buna-N	1
Abrasion Resistant Buna-N	2
Black Neoprene	3
EPDM	5
Viton (275° F)	6
Hypalon	7
Perox. Cured Buna-N	8
PTFE/Buna-N**	L
Viton (400° F)	P
EPDM (FDA)	V
White Buna-N (FDA)	W
Potable water EPDM	D
White Buna-N	B

** 2½" & 5" PTFE/Buna-N not available

9. Actuator	Code
Handle	2
Infinite/Lockable (2"-6")	3
Infinite (8")	4
Gear Operator	5
Double Acting	6
Fail Close (SR)	7
Fail Open (SR)	8
Electric	9
Gear Operating/Balancing	G
Buried Gear/2" Nut	C
Chain Wheel	U
None	X

10. Special Features	Code
Custom Product	D

*Standard with 316SS Disc only

The nomograph on the opposite page gives the relationships of valve size, flow, velocity, and pressure drop for various disc positions.

Sample Calculation, Liquid (see dark green line on chart)

Given:

Water (1.0 specific gravity) at 60°F is flowing through a 6-inch valve at a rate of 1000 gpm.

Find:

Line velocity (ft./sec.) and pressure drop when valve is in full-open (disc at 90°) position.

Solution:

From the 6-inch valve size at lower left of nomograph, go diagonally up to the intersecting horizontal line for 1000 gpm. From that point, proceed directly down to determine line velocity as 11 ft./sec.

For pressure drop, return to the 1000 gpm intersection and continue up vertically to "90° disc open" intersecting diagonal line. From this point, go horizontally to the left to determine pressure drop as 0.5 psi.

Sample Calculation, Gas (see light green line on chart)

Given:

Gas (0.8 lb/cu. ft. density) is flowing through an 8-inch valve at a rate of 1500 cu. ft./min.

Find:

Line velocity (ft./min.) and pressure drop when valve is in full-open (disc at 90°) position.

Solution:

From 8-inch valve size at lower left of nomograph, go diagonally up to the intersecting horizontal line for 1500 cu. ft./min. From that point, proceed directly down to the bottom line of the nomograph to determine line velocity as 4000 ft./min.

For pressure drop, return to the 1500 cu. ft./min. intersection and continue up vertically to "90° disc open" intersecting diagonal line. From this point, go horizontally to the left to determine pressure drop as 17 psi. Now, convert pressure drop to gas by dividing gas density by liquid density and multiplying by 17.

$$\frac{0.8}{62.34} \times 17.0 = 0.22 \text{ psi}$$

General Notes

1. Liquid flow data is based on pressure drop and flow rate with viscosity similar to water at 60° F using flow coefficient.
2. Velocities for liquids with densities similar to water should be less than 16 ft./sec.
3. Nomograph flow rate for gases is in cubic feet per minute (CFM) at flowing conditions. To convert flow rate from standard cubic feet per minute to CFM, use the following formula:

$$\text{CFM} = \frac{(\text{SCFM} \times 14.7) \times (460 + °\text{F})}{(\text{line pressure, psia}) \times 520}$$

4. Gas density in lbs./cu. ft. equals:

$$\frac{\left(\begin{matrix}270 \times \\ \text{line pressure, psia}\end{matrix}\right) \times \left(\begin{matrix}\text{specific gravity of} \\ \text{gas (relative to air)}\end{matrix}\right)}{460 + °\text{F}}$$

Size	Cv at Full-Open
2"	115
2 1/2"	196
3"	302
4"	600
5"	1022
6"	1579
8"	3136
10"	5340
12"	8250
14"	11917
16"	16388
18"	21705
20"	27908
24"	43116
30"	73426

Definitions

C_V = Flow coefficient for valves; expresses flow rate in gallons per minute of 60°F water with 1.0 psi pressure drop across valve.

C_V = $Q\sqrt{\dfrac{P}{62.4\,\Delta P}}$

K = resistance coefficient.

K = $d\sqrt{\dfrac{29.9}{C_V}}$

P = weight density of fluid, in pounds per cubic foot.

d = internal diameter of Schedule 40 pipe, in inches.

Q = rate of flow, in gallons per minute.

ΔP = differential pressure, in pounds per square inch gauge.

Spec. 3.44

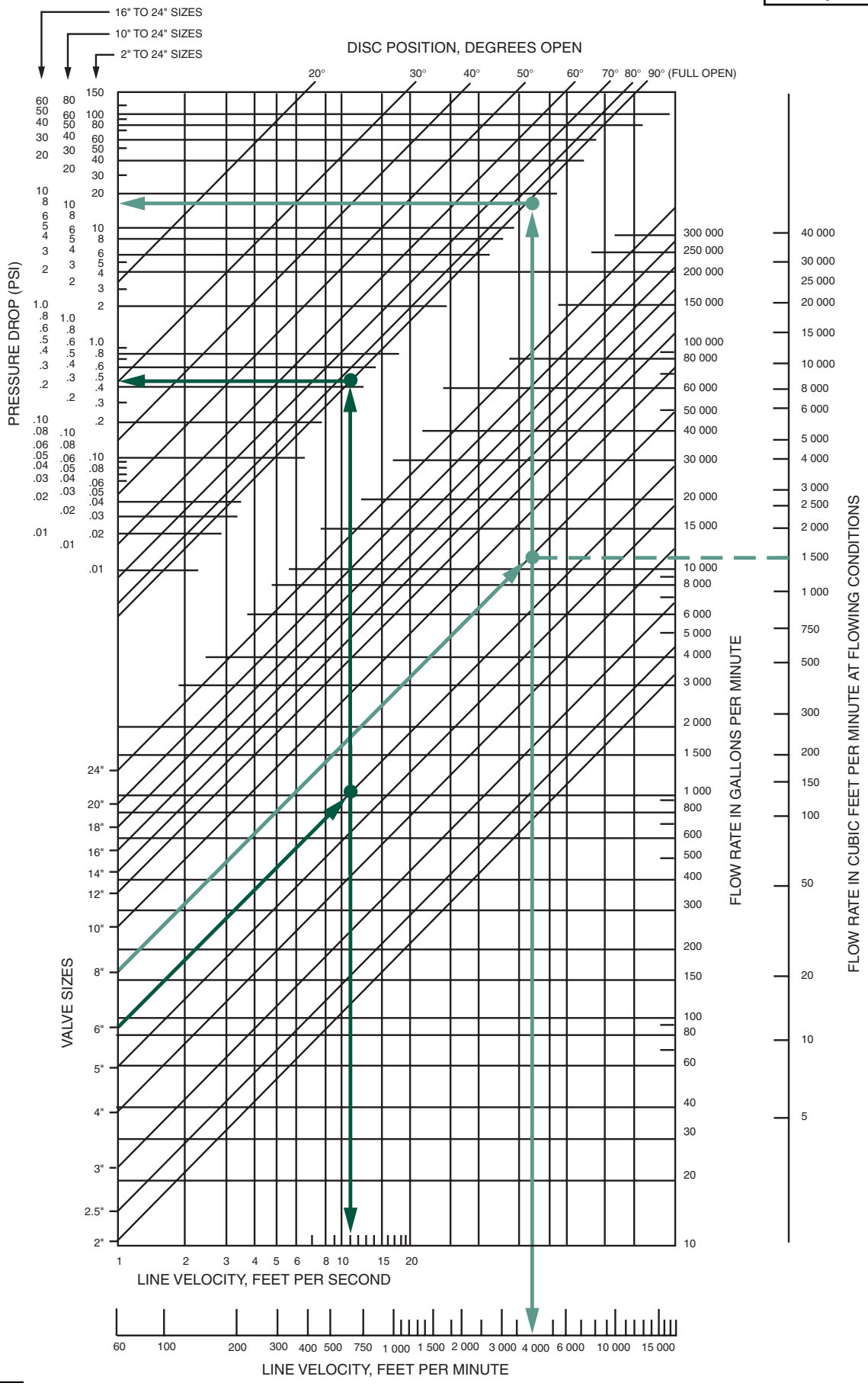
16" TO 24" SIZES
10" TO 24" SIZES
2" TO 24" SIZES
DISC POSITION, DEGREES OPEN
20° 30° 40° 50° 60° 70° 80° 90° (FULL OPEN)
PRESSURE DROP (PSI)
VALVE SIZES
24" 20" 18" 16" 14" 12" 10" 8" 6" 5" 4" 3" 2.5" 2"
FLOW RATE IN GALLONS PER MINUTE
FLOW RATE IN CUBIC FEET PER MINUTE AT FLOWING CONDITIONS
LINE VELOCITY, FEET PER SECOND
1 2 3 4 5 6 8 10 15 20
LINE VELOCITY, FEET PER MINUTE
60 100 200 300 400 500 750 1 000 1 500 2 000 3 000 4 000 6 000 10 000 15 000

Spec. 3.44

Center Line®

Global Headquarters
9200 New Trails Drive
The Woodlands, Texas 77381-5219
Tel: 281-298-5463
Fax: 281-292-1749

Thomastown, Australia Operations
322 Settlement Road
Thomastown, VIC 3074
Tel: +61-39-465-2755
Fax: +61-39-466-1365

Sydney, Australia Operations
146-154 Dunheved Circuit
St. Mary's, N.S.W. 2760
Sydney, Australia
Tel: +61-29-623-0234
Fax: +61-29-673-3870

W. Sussex UK Operations
Gerrard House, Worthing Road
East Preston, Littlehampton
West Sussex, BN16 1AW
Tel: +441-903-779111
Fax: +441-903-779222

Ningjin Operations
No. 8 Youyi Street Ningjin County
Hebei Province, China 055550
Tel: +86-319-580-6651
Fax: +86-319-580-8661

www.cranevalve.com

Crane Valves North America

Thinking Globally

CENTER LINE®
Resilient Seated Butterfly and Check Valves
Pneumatic and Electric Actuators

FLOWSEAL®
High Performance Butterfly Valves

DUO-CHEK®
High Performance Wafer Check Valves

NOZ-CHEK®
Severe Service Check Valves

PACIFIC
High Pressure and Severe Service Valves
Quarter Turn Severe Service Plug Valves

CRANE
Cast Steel, Bronze and Iron Valves

JENKINS
Bronze, Iron and Cast Steel Valves

ALOYCO
Corrosion Resistant Gate, Globe and Check Valves

CRANE NUCLEAR, INC.
Valves Designed for Nuclear Service
Diagnostic Valve Repair, Equipment and Services

CRANE SERVICE CENTERS
Certified OEM Valve Repair Services

Crane, Center Line, Flowseal, Duo-Chek, Noz-Chek, Pacific, Jenkins, and Aloyco are trademarks of Crane Co.
© 2005

CALGON CARBON CORPORATION	BALL VALVES MATERIAL SPECIFICATION	SPEC NO:
	FORGED BRONZE, BRASS, OR BARSTOCK BRASS BODY REGULAR PORT BALL VALVE	4.03

MATERIAL: Bronze or forged brass or barstock brass body regular port ball valve, blow-out proof stem, ball and seat retainer design to permit valve to be dead ended in either flow direction, bronze or brass ball and stem, PTFE seats and seals (furnish glass fiber reinforced PTFE seats and graphited stem seal if required to meet pressure and temperature rating), wrench handle operated, threaded ends.

RATING: 500 PSIG @ 100 DEG. F.
150 PSIG @ 366 DEG. F.

MANUFACTURER: Grinnell, Powell, Worcester, Clayton Mark-Pacific Valve, Jamesbury, Conbraco Industries, Rockwood, Milwaukee or equal.

SIZES: 1/4" thru 2"

MODELS: Grinnell figure 171N,
Powell "CRESCENT" figure 421OR,
Worcester "WOVCO" 600, Figure No. 5811R,
Clayton Mark-Pacific Valve Figure No. BR-880-I-T,
Jamesbury Figure 351,
Conbraco Industries "APOLLO" 70-100 Series,
Rockwood Figure 105S,
Milwaukee BA-100

GENERAL REQUIREMENTS:

PROPRIETARY AND CONFIDENTIAL
THIS DOCUMENT AND DESIGN DETAILS ARE THE PROPERTY OF CALGON CARBON CORPORATION AND ARE NOT TO BE REPRODUCED IN WHOLE OR PART, NOR EMPLOYED FOR ANY PURPOSE OTHER THAN SPECIFICALLY PERMITTED IN WRITING BY CALGON CARBON CORPORATION. THIS DOCUMENT IS LOANED AND SUBJECT TO RETURN ON DEMAND.

Issue Date: 01/01/89 Revision Date: 08/14/2003

Approved by Gerald Kirner on 08/14/2003

FORGED BRASS BALL VALVE MODEL NO VRN 5000
STANDARD PORT THREADED ENDS

Spec. 4.03

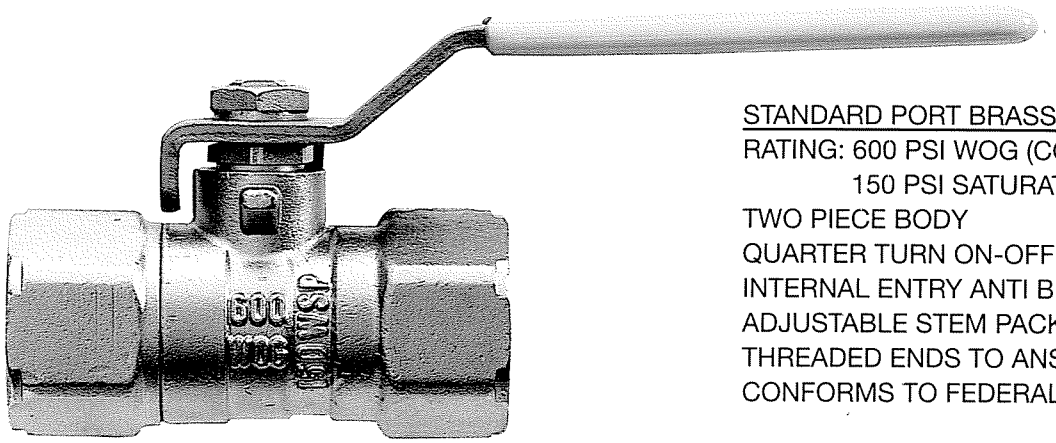

STANDARD PORT BRASS BALL VALVES
RATING: 600 PSI WOG (COLD- NON SHOCK)
150 PSI SATURATED STEAM
TWO PIECE BODY
QUARTER TURN ON-OFF
INTERNAL ENTRY ANTI BLOW-OUT STEM
ADJUSTABLE STEM PACKING GLAND
THREADED ENDS TO ANSI B 2.I
CONFORMS TO FEDERAL SPEC WWV-35B

SIZE	PART NUMBER	A	B	C	D	E	F	CV *	WT LBS
1/4"	50500 A	.29	1.74	.87	.66	2.62	1.25	7.3	.18
3/8"	50500 B	.29	1.80	.95	.82	2.62	1.25	6.9	.22
1/2"	50500 C	.39	2.38	1.19	.98	3.75	1.60	10	.41
3/4"	50500 D	.55	2.52	1.26	1.22	3.75	1.62	20	.55
1"	50500 E	.75	3.00	1.50	1.53	4.50	2.05	32	1.00
1" 1/4	50500 F	.95	3.38	1.69	1.89	4.50	2.16	48	1.84
1" 1/2	50500 G	1.18	3.70	1.85	2.12	6.00	2.87	80	2.07
2"	50500 H	1.50	4.36	2.18	2.63	6.00	2.87	135	3.10

CV *= GALLONS OF WATER PER MINUTE THROUGH THE VALVE WITH A I PSI PRESSURE DROP

RATING 500WOG

2" 1/2	50500 J	1.85	5.35	2.68	3.38	6.90	3.60	310	6.03
3"	50500 K	2.44	6.14	3.07	3.94	8.50	4.00	420	9.58

RATING 250WOG

4"	50500 L	3.00	7.00	3.50	5.00	9.25	5.00	810	15.60

UL LISTED
1/4" - 2" SIZE

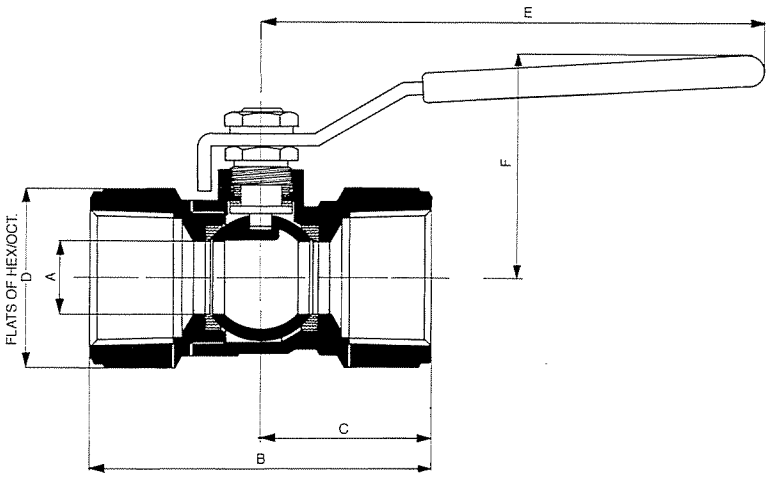

CALGON CALGON CARBON CORPORATION	BALL VALVES MATERIAL SPECIFICATION	SPEC NO:
	STAINLESS STEEL AND ENTRY FULL BORE BALL VALVE	4.08

MATERIAL: Stainless steel and entry full bore ball valve 1/2" thru 4" size (Reduced Port for 6" & 8" Acceptable) with blow-out proof stem and seat retainer design to permit valve to be dead ended in either flow direction. Valve has lockable feature to lock the valve in either the open or shut position. Type 316 stainless steel body, ball and stem, TFE seats and seals, wrench operated, 150 lb. ANSI B16.5 flanged ends, raised face, 1/2" thru 4" size Face-to-face dimensions to conform to ANSI B16.10 for steel gate valves. Screwed body inserts not acceptable. Gear Operator for 6" and 8" size valves. No asbestos allowed.

RATING: 275 PSIG @ 100 DEG. F. or 110 PSIG @ 353 DEG. F.

MANUFACTURER: Modentic VL-11, Sharpe Valve #50116-R, or equal

SIZES: 1/2" thru 8"

MODELS: Modentic Figure No. VL-11-150 , Figure No. BV-150, or equal.

Issue Date: 01/01/89 Revision Date: 09/15/99

Approved by Joseph P. McMahon on 07/17/2001

Spec. 4.08

SHARPE® VALVES

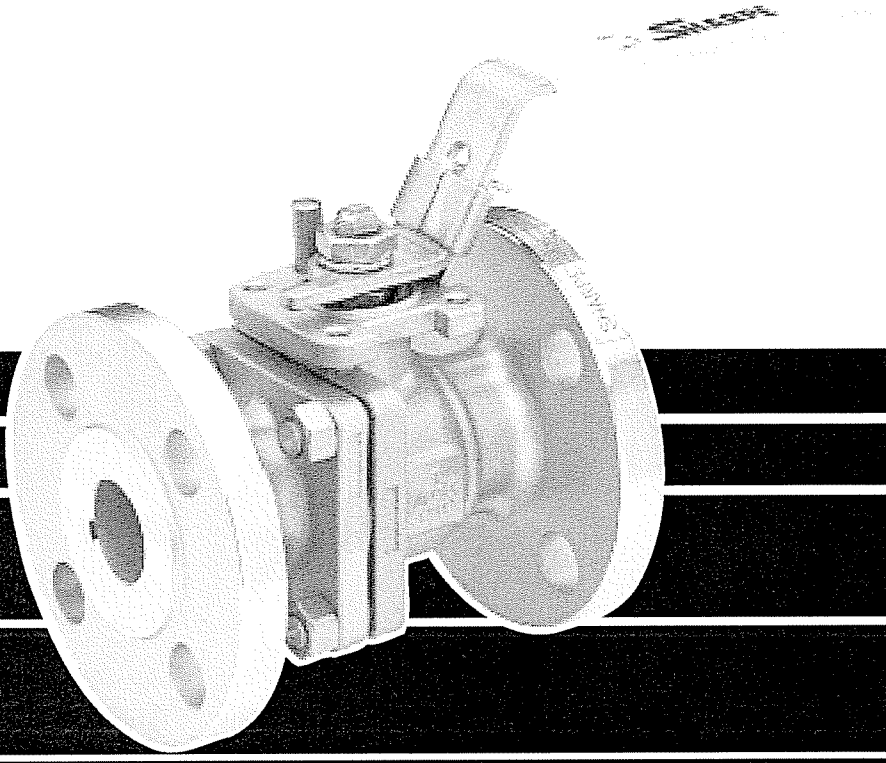

FLANGED FULL PORT BALL VALVE SERIES 50 / CLASS 150

1/2" - 4"

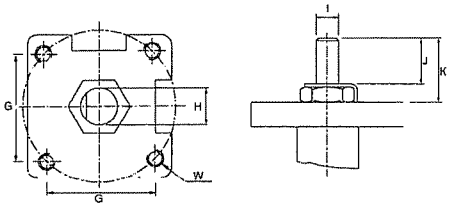

6" - 8"

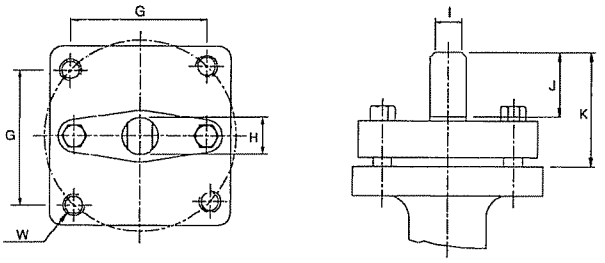

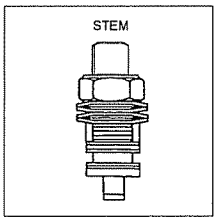

1/2" - 4"
STEM ARRANGEMENT
FOR ACTUATORS

SEAT PRESSURE/TEMPERATURE RATING SERIES 50

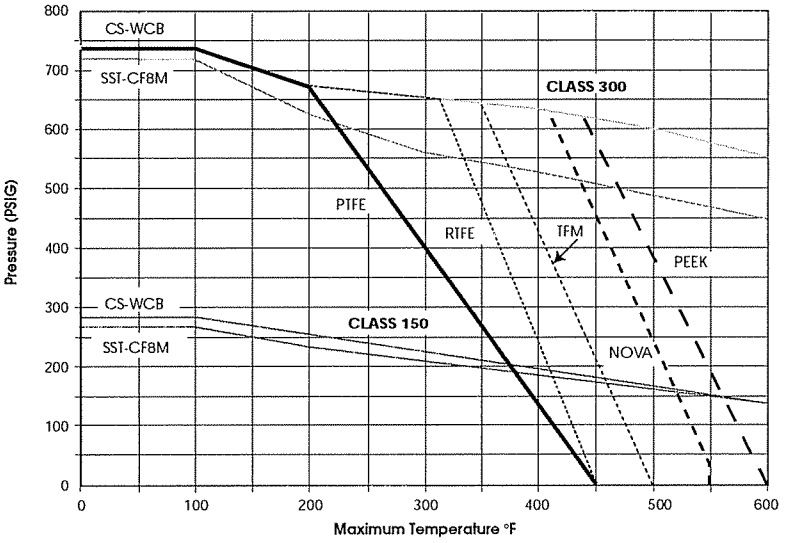

HOW TO ORDER

VALVE SIZE	VALVE SERIES	CLASS	ALLOY	SEATS	OPTIONS
1/2" 3/4" 1" 1-1/2" 2" 2-1/2" 3" 4" 6" 8"	50	150# = 11	2 = Alloy 20 4 = Carbon Steel 6 = Stainless Steel 5 = Hastelloy C 3 = Monel	T = TFE R = RTFE N = NOVA P = Peek M = TFM™*	X = Oxygen Service OH = Oval Handle F = Fugitive Emissions Certified ANSI 593 00 01 E = Extended Stem L = Lockable Extended Stem D = Leak detection Stem GO = Gear Operator 7 = 17- 4PH Stem A = Nace

3/4" 50 11 6 T X

SHARPE® VALVES
A DIVISION OF Sharon Piping & Equip. Inc.

Toll-Free 1-877-7SHARPE
E-Mail:sharpediv@aol.com
www.sharpevalves.com

504 West Wrightwood Ave.
Elmhurst , IL 60126

Due to continuous development of our product range we reserve the right to change the dimensions and information contained in the leaflet as required.
TFM is a registered trademark of Dyneon, LLC.

SERIES 50
VALVE PARTS AND IDENTIFICATION

CLASS 150
BLOW OUT PROOF STEM
LOCKING DEVICE

APPLICABLE STANDARDS	
Wall Thickness	ASME B 16.34
Face to Face Dimensions	ASME B 16.10
Flange Dimensions	ASME B 16.5
Pressure Tests	ASME B 16.34 API 598 (Optional)
Basic Design	ASME B16.34

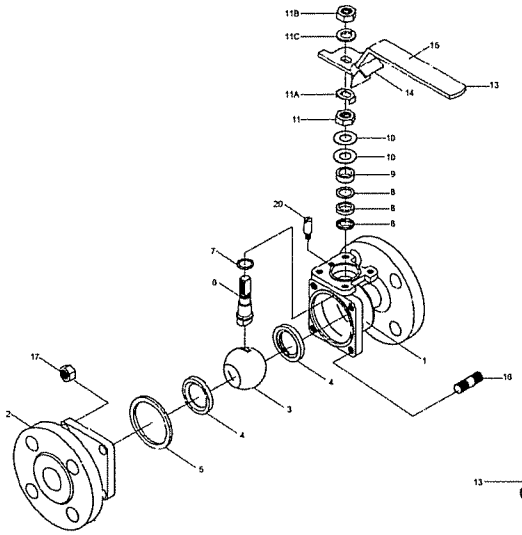

1/2" - 2"

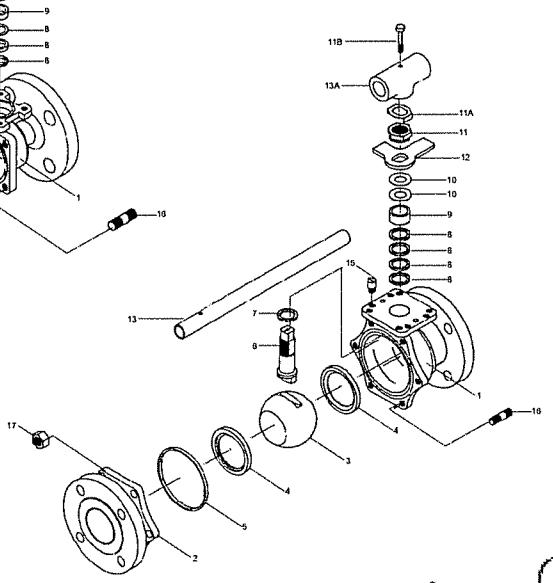

2-1/2" - 4"

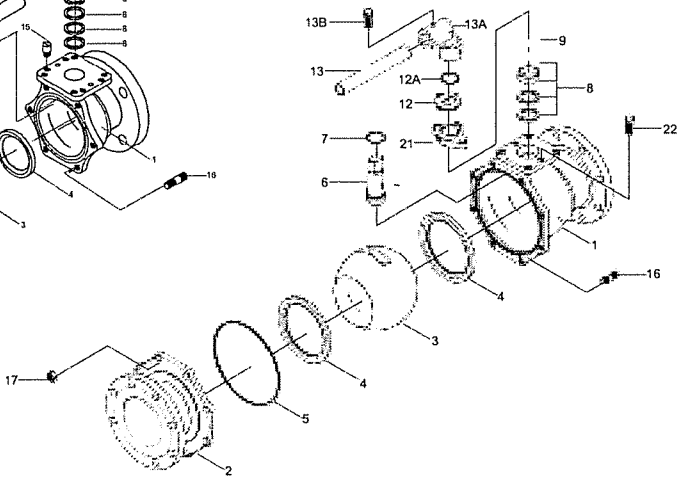

6" - 8"

PART NO.	PART	QTY.	MATERIAL
1	Body	1	316 Stainless Steel ASTM A351 CF8M Alloy 20 ASTM A351 CN7M Carbon Steel ASTM A216 WCB Hastelloy C ASTM A494 GR CW-12MW Monel ASTM A494 GR M35-1
2	End Connector	1	316 Stainless Steel ASTM A351 CF8M Alloy 20 ASTM A351 CN7M Carbon Steel ASTM A216 WCB Hastelloy C ASTM A494 GR CW-12MW Monel ASTM A494 GR M35-1
3	Ball	1	316 Stainless Steel Alloy 20 Hastelloy C
4	Seat	2	TFM(Super TFE) TFE Reinforced TFE NOVA PEEK
5	Body Seal	1	TFE
6	Stem	1	316 Stainless Steel Alloy 20 Hastelloy C 17-4PH (Option)
7	Thrust Bearing	2	Reinforced TFE
8	Stem Packing	3/4	Reinforced TFE
9	Gland Packing	1	304 Stainless Steel
10	Belleville Washer (1/2"-4")	2/4	304 Stainless Steel
11	Packing Nut (1/2"-4")	1	304 Stainless Steel
11A	Lock Tab	1	Stainless Steel
11B	Handle Nut	1	304 Stainless Steel
11C	Lock Washer	1	304 Stainless Steel (1/2"-2")

PART NO.	PART	QTY.	MATERIAL
12	Stopper	1	304 Stainless Steel
12A	Snap Ring	1	Stainless Steel (6"-8")
13	Handle	1	304 Stainless Steel (1/2"-2") Galvanized Steel (2-1/2"-4") Ductile Iron (6"-8")
13A	Wrench Block	1	Stainless Steel
13B	Hex Head Bolt	1	304 Stainless Steel
14	Locking Device (1/2"-2")	1	304 Stainless Steel
15	Sleeve	1	Vinyl
16	Body Stud	SEE* N	A193 B8 (SST) A193 B7 (CS)
17	Nut	SEE* N	A194 8 (SST) A194 2H (CS)
20	Stop Pin (1/2"-2") (2-1/2"-4")	1 2	304 Stainless Steel 304 Stainless Steel
21	Gland Flange (6"-8")	1	304 Stainless Steel
22	Gland Bolts (6"-8")	2	304 Stainless Steel

*See Dimensions

1/2" - 2"

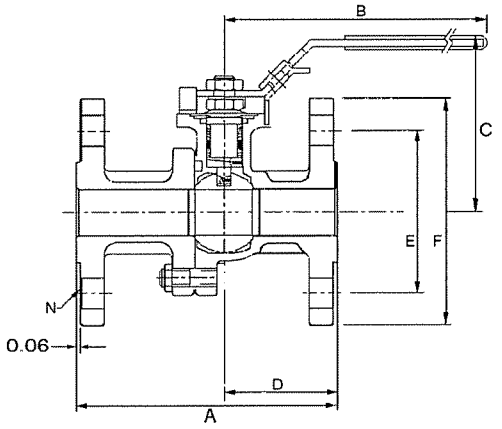

2-1/2" - 4"

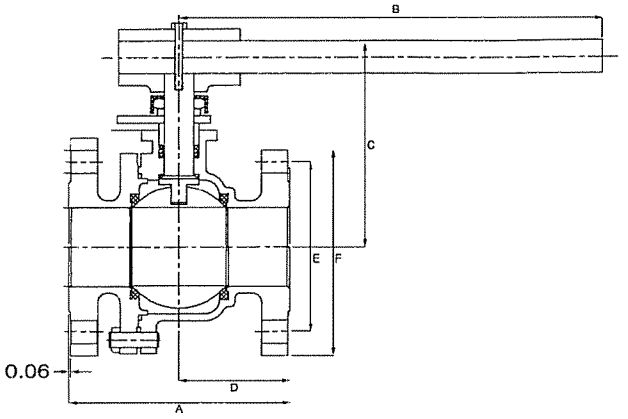

6" - 8"

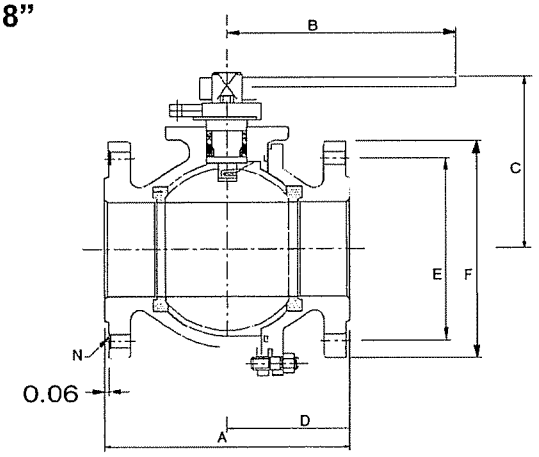

CV DATA	
1/2"	26
3/4"	50
1"	94
1-1/2"	260
2"	480
2-1/2"	750
3"	1300
4"	2300
6"	5400
8"	10000

PORT	
1/2"	0.59
3/4"	0.78
1"	1.00
1-1/2"	1.50
2"	2.00
2-1/2"	2.55
3"	3.00
4"	4.00
6"	6.00
8"	7.88

WEIGHT (lbs.)	
1/2"	4
3/4"	6
1"	8
1-1/2"	15
2"	20
2-1/2"	36
3"	45
4"	75
6"	135
8"	290

SIZE	A	B	C	D	E	F	N	G	H	I	J	K	W
1/2"	4.25	4.75	3.60	1.80	2.38	3.50	4	1.39	3/8-24 UNF	.22	.28	.63	M5
3/4"	4.62	4.75	3.75	2.00	2.75	3.85	4	1.39	3/8-24 UNF	.22	.28	.63	M5
1"	5.00	6.22	3.75	2.12	3.13	4.25	4	1.39	7/16-20 UNF	.30	.30	.90	M6
1-1/2"	6.50	9.00	4.50	2.76	3.56	5.00	4	1.94	9/16-18 UNF	.35	.42	1.18	M8
2"	7.00	9.00	4.80	3.08	4.75	6.00	4	1.94	9/16-18 UNF	.35	.42	1.18	M8
2-1/2"	7.50	13.75	6.70	3.09	5.50	7.00	4	2.84	M20	.55	.55	1.83	M10
3"	8.00	13.75	7.00	3.74	6.00	7.48	4	2.84	1-14 UNS	.745	.66	1.83	M10
4"	9.00	13.75	7.70	4.46	7.50	9.01	8	2.84	1-14 UNS	.745	.66	1.83	M10
6"	15.50	38.97	11.22	7.61	9.50	10.98	8	3.89	1.02	1.64	1.46	3.00	M12
8"	18.00	38.97	11.57	8.34	11.75	13.50	8	4.59	1.02	1.64	1.46	3.00	M12

CALGON CARBON CORPORATION	BALL VALVES MATERIAL SPECIFICATION	SPEC NO:
	STAINLESS STEEL END ENTRY REGULAR PORT BALL VALVE	4.57

MATERIAL: Stainless steel end entry regular port ball valve with blowout proof stem and seat retainer design to permit valve to be dead ended in either flow direction. ASTM A-296, Grade CF8M Type 316 stainless steel body, ball and stem, TFE seats and seals, wrench operated, threaded ends. Screwed body inserts or tail pieces not acceptable.

RATING: 80 PSIG @ 400 DEG. F. or 1500 PSIG @ 150 DEG. F.

MANUFACTURER: Modentic, Sharpe Valve #54576, Jamesbury, or equal.

SIZES: 1/4" thru 2"

MODELS: Modentic Figure No. V-008, Jamesbury Bulletin 210, Trueline - N600LL, or equal

Issue Date: 01/01/89 Revision Date: 09/15/99

Approved by Joseph P. McMahon on 07/17/2001

Spec. 4.57

SHARPE® VALVES

SERIES 5457
THREADED STANDARD PORT BALL VALVE

Spec. 4.57

SHARPE® VALVES

PRESSURE TEMPERATURE RATINGS

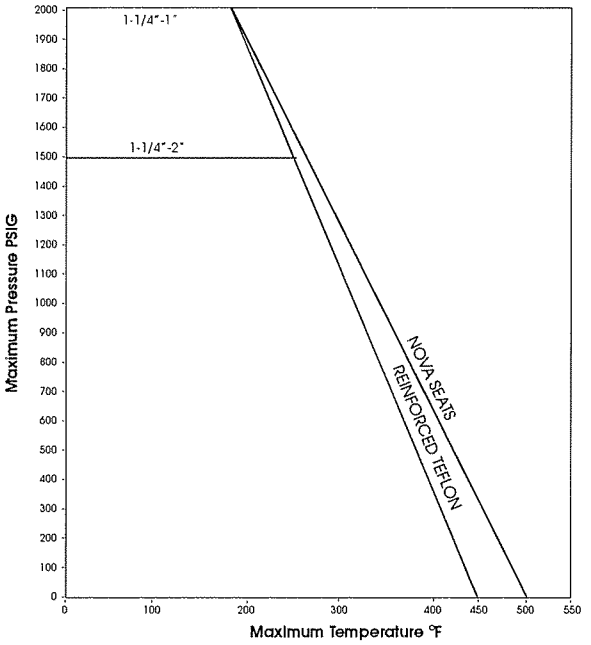

HOW TO ORDER

VALVE SIZE	VALVE SERIES	BODY & ENDS	SEAT & SEAL
1/4" 3/8" 1/2" 3/4" 1" 1-1/4" 1-1/2" 2"	5457	4 = Carbon Steel 6 = Stainless Steel	RT Seats PTFE Seals as Standard N = Nova Seats/ Graphoil Seal

3/4" **5457** **4** **N**

Sharon PIPING & EQPT., INC.

Toll-Free 1-877-7SHARPE
Web Site: www.sharpevalves.com

1260 Garnet Drive
Northlake, Illinois 60164 U.S.A

Due to continuous development of our product range we reserve the right to change the dimensions and information contained in the leaflet as required.

SERIES 5457
VALVE PARTS AND IDENTIFICATION

Spec. 4.57

ASTM-A216
ASTM-A351
1/4" - 1" 2000 lb. WOG
1-1/4" - 2" 1500 lb. WOG
LOCKING DEVICE
ACTUATOR MOUNTING PAD
STANDARD PORT
BLOWOUT PROOF STEM
STEAM RATINGS: (SATURATED)
WITH REINFORCED TEFLON
SEATS 150 WSP
WITH NOVA SEATS 250 WSP

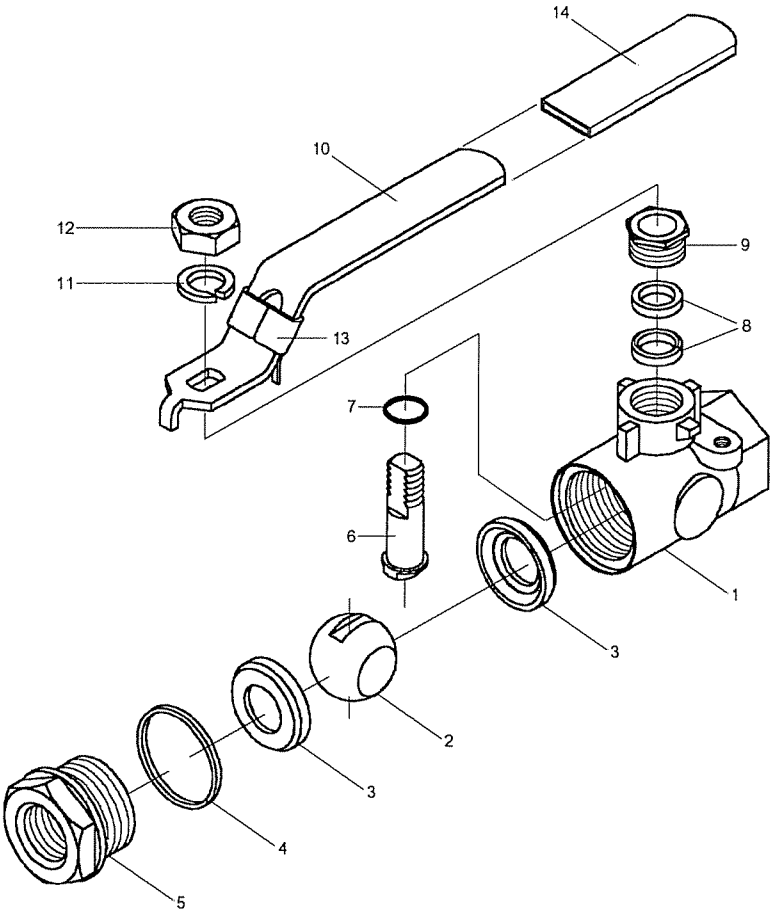

PART NO.	PART	QTY.	MATERIAL
1	Body	1	ASTM-A216 WCB ASTM-A351 CF8M
2	Ball	1	316 Stainless Steel
3	Seat	2	RPTFE / NOVA
4	Body Seal	1	PTFE / Graphite
5	End Plug	1	ASTM-A216 WCB ASTM-A351 CF8M
6	Stem	1	316 Stainless Steel
7	Thrust Washer	1	PTFE
8	Stem Packing	2	PTFE / Grapholl
9	Packing Nut	1	Stainless Steel - 316
10	Handle	1	Stainless Steel - 304
11	Lock Washer	1	Stainless Steel - 304
12	Handle Nut	1	Stainless Steel - 304
13	Locking Device	1	Stainless Steel - 304
14	Handle Sleeve	1	Plastic

SERIES 5457
VALVE DIMENSIONS

1/4" - 1"

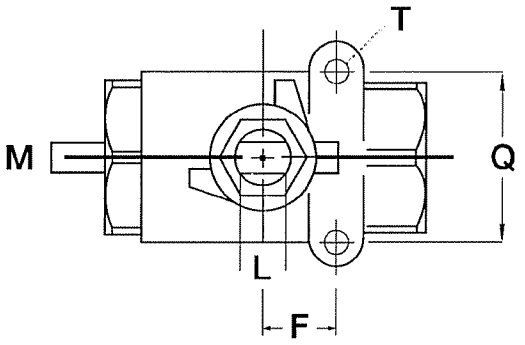

1-1/4" - 2"

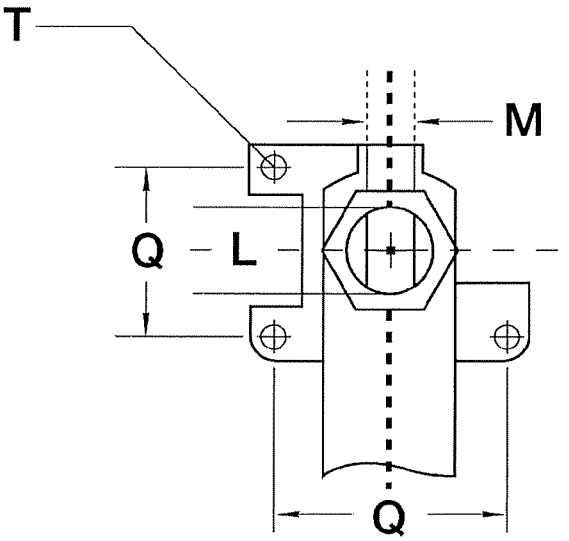

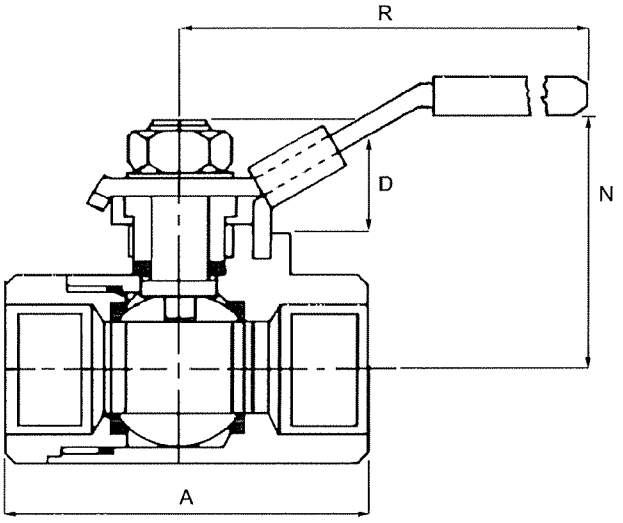

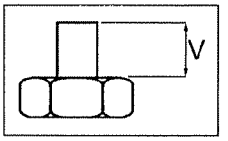

1/4" - 2"
STEM ARRANGEMENT
FOR SERIES 5457

SIZE	A	D	N	R	Q	F	M	L	T	V	PORT SIZE	APPROX. WEIGHT
1/4"	2.25	0.95	1.75	4.00	1.10	0.45	0.22	0.30	10 - 24	0.30	0.50	0.60
3/8"	2.25	0.95	1.75	4.00	1.10	0.45	0.22	0.30	10 - 24	0.30	0.50	0.60
1/2"	2.32	1.12	2.00	4.00	1.10	0.45	0.22	0.30	10 - 24	0.32	0.50	0.55
3/4"	3.12	1.20	2.20	5.00	1.35	0.85	0.25	0.42	10 - 24	0.35	0.70	1.10
1"	3.37	1.20	2.45	5.00	1.35	0.85	0.25	0.42	10 - 24	0.35	0.88	1.50
1-1/4"	4.10	1.06	3.40	5.75	1.40*	—	0.37	0.61	1/4 - 20	0.50	1.00	2.75
1-1/2"	4.35	1.10	3.40	5.75	1.40*	—	0.37	0.61	1/4 - 20	0.50	1.25	3.50
2"	5.40	1.10	3.75	5.75	1.40*	—	0.37	0.61	1/4 - 20	0.50	1.50	5.25

CV* DATA

1/4"	6
3/8"	6
1/2"	9
3/4"	24
1"	35
1-1/4"	47
1-1/2"	81
2"	105

***CV:** The volume of water in gal./min. that will pass through a given valve with a pressure drop of 1 PSI.

CALGON CARBON CORPORATION	STEAM TRAPS, DRAINERS, AIR ELIMINATORS MATERIAL SPECIFICATION	SPEC NO:
	AUTOMATIC AIR VENT AND VACUUM BREAKER	21.94

MATERIAL:
Automatic Air Vent and Vacuum Breaker. Cast iron body with stainless steel float, brass and stainless steel trim, female NPT threaded inlet and outlet.

MANUFACTURER:
Multiplex Manufacturing Company, 600 Fowler Ave., Berwick, Pa. 18603, or equal.

SIZES:

SIZES	MODEL NO.	ORIFICE DIAMETER	WORKING PRESSURE
1"	U-10	3/16"	0-125 PSIG
1"	U-10	5/32"	0-200 PSIG
1"	U-10	1/8"	0-250 PSIG
1"	U-10	3/32"	0-300 PSIG
2"	U-20	1/4"	0-165 PSIG
2"	U-20	3/16"	0-250 PSIG
2"	U-20	1/8"	0-300 PSIG
3"	U-30	1/8"	0-300 PSIG
4"	U-40	1/8"	0-300 PSIG

MODELS: Crispin Universal Air Valve, or equal.

Issue Date: 01/01/89 Revision Date: 06/25/90

Approved by Matthew R. McGowan on 07/24/2000

COMBINATION AIR VALVE

Spec. 21.94

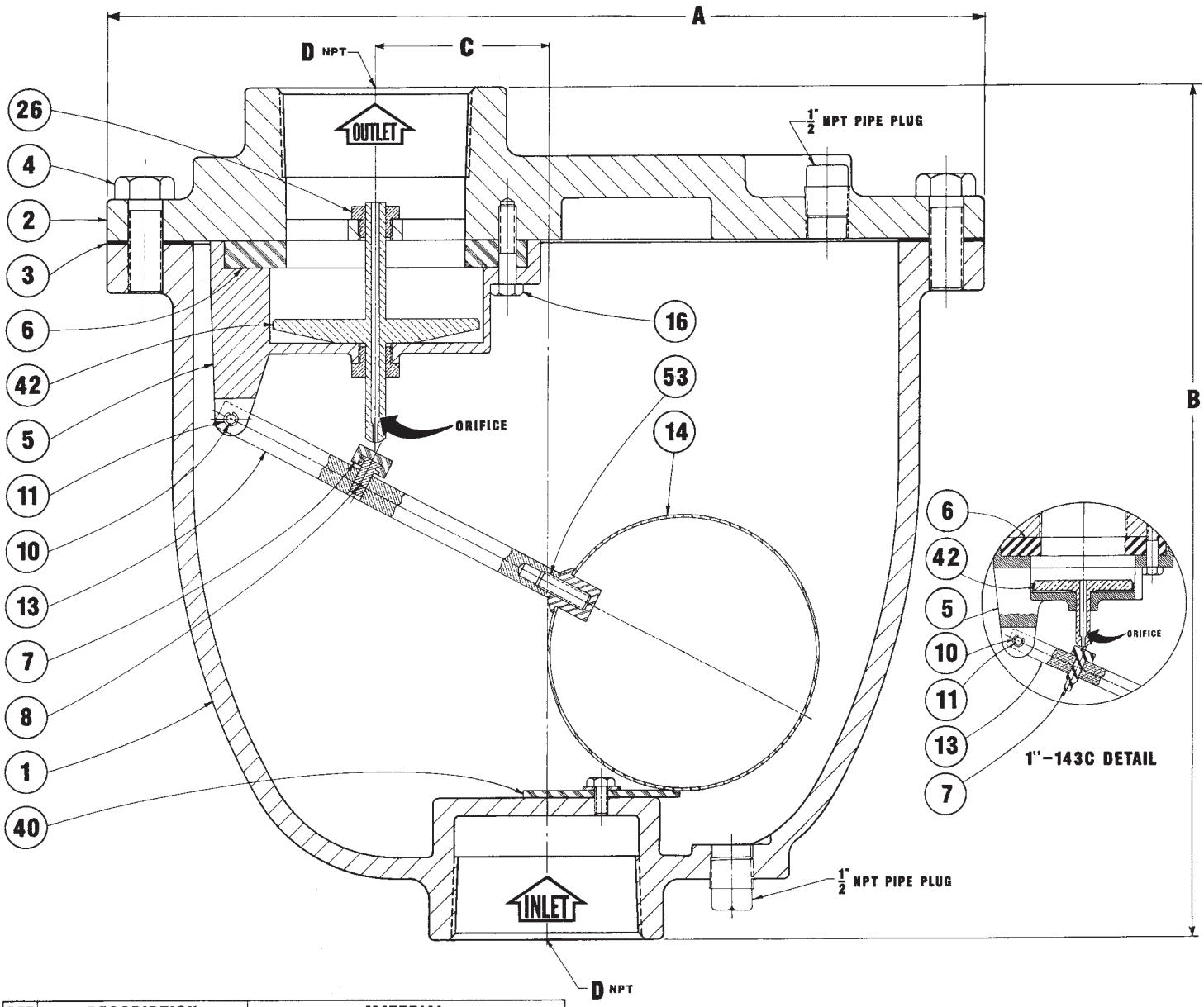

DET	DESCRIPTION	MATERIAL
1	BODY	CAST IRON ASTM A126 GR. B
2	COVER	CAST IRON ASTM A126 GR. B
3	COVER GASKET	LEXIDE (non-asbestos)
4	COVER BOLTS	STEEL ASTM A307 GR. B
5	LEVERAGE FRAME [1]	CAST IRON ASTM A126 GR. B
6	SEAT	BUNA-N
7	NEEDLE	BUNA-N
8	NEEDLE PIN [2]	STAINLESS STEEL ASTM A581 T416 H.T.
10	LEVER PIN	STAINLESS STEEL ASTM A581 T303
11	RETAINING RING	STAINLESS STEEL PH15-7Mo
13	FLOAT LEVER	BRASS ASTM B16
14	FLOAT	STAINLESS STEEL ASTM A240 T304
16	LEVERAGE FRAME SCREW	STAINLESS STEEL 18-8
26	GUIDE BUSHING	BRASS ASTM B16
40	BUMPER ASSEMBLY	BUNA-N
42	PLUG	BRASS ASTM B124
53	FLOAT RETAINING SCREW	STAINLESS STEEL 18-8

1 STANDARD MATERIAL ON SIZE 1" AND 2" IS DELRIN ASTM D2133 AND GUIDE BUSHING IS NOT REQUIRED ON THE FRAME.
2 NEEDLE PIN IS NOT REQUIRED ON SIZES 1" AND 2".

AVAILABLE WITH 125 LB. OR 250 LB. FLANGE INLET
SPECIFY WORKING PRESSURE_____PSI
DESIGN FOR 300 PSI MAX. NON-SHOCK SERVICE

SIZES	MODEL No	A	B	C	D	WIDTH	LARGE ORIFICE	SMALL ORIFICE	APPROX. WT., LB.
1"	143C	11	10	$2\frac{1}{2}$	1	7	1	$\frac{5}{64}$	35
2"	145C	14	$12\frac{3}{16}$	3	2	8	2	$\frac{3}{32}$	75
3"	147C	16	$15\frac{7}{16}$	$3\frac{1}{8}$	3	10	3	$\frac{3}{32}$	100
4"	149C	18	$17\frac{1}{16}$	$3\frac{3}{4}$	4	11	4	$\frac{3}{32}$	170

CERTIFIED BY: _____

DATE: _____

DATE		DRWG. NO.
09-01-03	APCO Willamette VALVE AND PRIMER CORPORATION	S-140C

SPECIFICATIONS OTHER SIDE

September 1, 2003

Spec. 21.94

SPECIFICATIONS

SERIES 140C COMBINATION AIR VALVES

Combination Air Valve (single body, double orifice) allows large volumes of air to escape out the larger diameter air vacuum orifice when filling a pipeline and closes water tight when the liquid enters the valve. During large orifice closure, the smaller diameter air release orifice will open to allow small pockets of air to escape automatically and independently of the large orifice.

The large air & vacuum orifice shall also allow large volumes of air to enter through the orifice during pipeline drainage to break the vacuum. The body inlet must be baffled to protect the lower float from direct contact of the rushing air and water to prevent premature valve shut-off. The top large orifice plug must be protected in similar manner for the same purpose.

The Buna-N seat must be fastened to the valve cover without distortion, for drop tight shut-off. The float shall be heavy stainless steel, hermetically sealed, designed to withstand a minimum of 1000 psi (static). The top plug shall be center guided thru hex bushings for positive shut-off.

Valve exterior to be painted Universal Primer for high resistance to corrosion.

The cross sectional area of the discharge orifice must be equal to the cross sectional area of the valve inlet size.

All materials of construction shall be certified in writing to conform to A.S.T.M. specifications as follows:

Body & Cover	Cast iron	ASTM A126 Gr.B
Float*	Stainless Steel	ASTM A240 T304
Needle & Seat	Buna-N	
Plug	Brass	ASTM B124
Leverage Frame [1”&2”]	Delrin	ASTM D4181
[3”&4”]	Cast iron	ASTM A126 Gr. B

*** Float design may vary on certain sizes**

Note: Other materials available.

Valve to be APCO Series 140C Combination Air Valve, as maunufactured by Valve & Primer Corporation, Schaumburg, Illinois, U.S.A.

APCO Willamette
VALVE AND PRIMER CORPORATION

1420 S. Wright BLVD. Schaumburg, IL 60193-4599
847-524-9000 FAX 847-524-9007 800-323-6969
WEBSITE: www.apcovalves.com EMAIL: factory@apcovalves.com

	STRAINERS MATERIAL SPECIFICATION	SPEC NO:
CALGON CALGON CARBON CORPORATION	SAMPLE PORT SEPTUM, TYPE 316 STAINLESS STEEL	22.27

MATERIAL: Sample port septum, Type 316 stainless steel, 0.060" wedge wire with 0.012" slot openings. Septum to be 1".O.D. x 1-1/2" long with 3/4" MNPT end fitting 1" long, TOL 2-3/4".

MANUFACTURER: Johnson Division - UOP Co., Orthos or approved equal.

Issue Date: 04/06/90 Revision Date: 07/14/93

Approved by Matthew R. McGowan on 06/11/99

Spec. 22.27

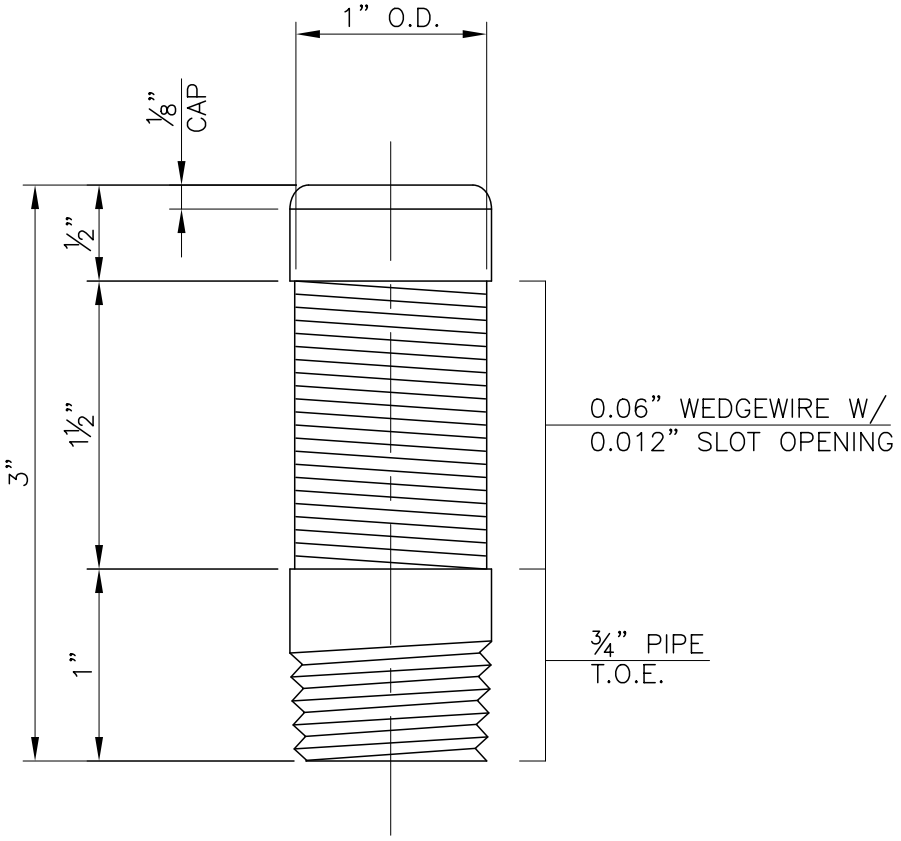

MATERIAL: 316 STAINLESS STEEL

REV	DESCRIPTION	APP	DATE
0			10-3-07

REVISIONS

THIS DRAWING AND DESIGN IS THE PROPERTY OF CALGON CARBON CORPORATION AND IS NOT TO BE REPRODUCED IN WHOLE OR IN PART NOR EMPLOYED FOR ANY PURPOSE OTHER THAN SPECIFICALLY PERMITTED IN WRITING BY CALGON CARBON CORPORATION. THIS DRAWING LOANED SUBJECT TO RETURN ON DEMAND.

	NAME	DATE
DRAFTER	JFS	5-12-05
DESIGNER		
CHECKER		
APPROVAL		
PROJECT No.	STANDARD	

CALGON

CALGON CARBON CORPORATION

CLIENT

TITLE

SAMPLE PORT
SEPTA DETAIL
CCC SPEC.: 22.27

DWG. Size	SHEET No.	SCALE
A	1 OF 1	NONE

DWG. No. 90-07-0014 REV. 0

V:\Products\Septa\90070014 Spec 22.27.dwg Oct 09, 2007 - 8:24am

	STRAINERS MATERIAL SPECIFICATION	SPEC NO:
CALGON CALGON CARBON CORPORATION	BASKET STRAINER, TYPE 316 STAINLESS STEEL	22.53

MATERIAL: Perforated basket strainer (Carbon Retainer) for 150 lb. Raised Face Flanges, type 316 stainless steel construction. Basket is to be Fabricated from 14 Gage 316 stainless steel with 1/8" holes drilled on 3/16" centers and covered with 40 mesh 316 stainless steel screen, this will then be covered by a 4 mesh 316 stainless steel support screen (0.063" wire diameter).

RATING: Support Screen is to be designed for 125 PSIG if plugged in forward or reverse flow.

MANUFACTURER: Mack Iron Works Company, or equal.

SIZES: 2" thru 12"

MODELS: Mack Iron Works Company Series PB-R/FF, Style PBL or equal.

Issue Date: 01/01/90 Revision Date: 08/23/90

Approved by Matthew R. McGowan on 06/16/99

CALGON CALGON CARBON CORPORATION	EXPANSION JOINTS MATERIAL SPECIFICATION	SPEC NO:
	RUBBER EXPANSION JOINT, DOUBLE ARCH TYPE	24.06

MATERIAL: Rubber expansion joint, double arch type, molded neoprene reinforced with multiple plies of nylon. Joint allows 4 way movement and 30 DEG. angular misalignment. Has loose steel backing flanges to be galvanized or zinc plated, 150 # drilling. No gaskets required. Control unit assemblies for pressures specified as 135 psi or greater.

RATING: 225 psi @ 170 DEG. F.

MANUFACTURER: Dynex, Inc., Proco Products, Inc., or Approved Equal.

SIZES: 1" thru 12"

MODELS: Dynex Series 702, Proco Products, Inc., Model 242-A-NN-4, with "blue" I.D. label or Approved Equal.

Issue Date: 01/01/89 Revision Date: 08/30/99

Approved by Matthew R. McGowan on 08/30/99

PROCO™

Spec. 24.06

SERIES

240/242

molded expansion joints

PROCO Series 240 and Series 242 Non-Metallic Expansion Joints are designed for tough demanding industrial applications as found in: Air Conditioning-Heating and Ventilating Systems, Chemical-Petrochemical and Industrial Process Piping Systems, Power Generating Systems, Marine Services, Pulp & Paper Systems, Water-Waste-water-Sewage and Pollution Control Systems. Installed next to mechanical equipment or between the anchor points of a piping system, specify the PROCO Series 240 or 242 to: (1) Absorb Pipe/Movement/Stress, (2) Reduce System Noise, (3) Isolate Vibration, (4) Compensate Alignment/Offset, (5) Eliminate Electrolysis, (6) Protect Against Start-Up/Surge Forces. Our history in the manufacturing of expansion joint products dates back to 1930. When you need an engineered rubber solution to a piping system problem, call PROCO.

Spherical Shapes-Stronger-More Efficient. Featuring an engineered molded style single or twin sphere designed bellows, the PROCO Series 240 and Series 242 are inherently stronger than the conventional hand-built Spool Type arch. Internal pressure within a sphere is exerted in all directions, distributing forces evenly over a larger area The spherical design "flowing-arch" reduces turbulence, sediment buildup, thrust area and the effects of thrust on the piping system equipment when compared to the "high-arch" design of hand-built standard products.

Greater Movements Are Available with the PROCO Series 240 and Series 242 when compared to the movements of conventional hand-built products. Axial compression, elongation, deflection and angular movements in the system are more readily absorbed by spherical types. These products are more forgiving and can be compressed or extended to install in non-standard openings, caused by equipment shifting or settling (Pre-compressing/extending the expansion joints for installation, may result in reduced pressure, vacuum and movement capabilities of the expansion joints. See Tables 2 and 3.)

Easy Installation With Alignable Metallic Flanges. The floating metallic flanges freely rotate on the bellows, compensating for mating flange misalignment, thus speeding up installation time (see Figures 1, 2, 3 & 4). Gaskets are also not required with the Series 240 or Series 242, provided the expansion joints are mated against a flat face flange as required in the installation instructions.

Less System Strain With Thin Wall Design. Manufactured by high pressure molding of elastomer and high-tensile fabric reinforcement, the Series 240 and Series 242 have a thinner wall section and lighter weight when compared to conventional hand-built products. Lower spring forces are therefore required, reducing piping/flange/equipment stress-strain-damage. PROCO Styles 240-C and 240-A are acceptable for use with plastic piping systems where even lower deflection forces are required.

Specifications Met. The PROCO Series 240 and Series 242 are designed to meet or exceed the pressure, movement and dimensional rating of the Spool Type arch as shown in the Rubber Expansion Joint Division, Fluid Sealing Association "Technical Handbook - Sixth Edition" Tables IV & V.

Table 1: Available Styles • Materials

For Specific Elastomer Recommendations, See: **PROCO™ "Chemical To Elastomer Guide"**

240-A	240-C	240-AV,D,E,M	242-A,B,C	PROCO™ Material Code [1]	Cover Elastomer [2]	Tube Elastomer	Maximum Operating Temp. °F	Identifying Color Band/Label
		X	X	/BB	Chlorobutyl	Chlorobutyl	250°	Black
	X	X	X	/EE	EPDM	EPDM	250°	Red
	X			/EE-9	EPDM	EPDM	265°	Red
	X			/ET-9 [3]	EPDM	Teflon®	265°	Red
	X			/HH	Hypalon®	Hypalon®	230°	Green
		X	X	/NH	Neoprene	Hypalon®	230°	Green
	X			/NJ	Neoprene	FDA-Nitrile	230°	White
		X	X	/NN	Neoprene	Neoprene	230°	Blue
X	X	X	X	/NP	Neoprene	Nitrile	230°	Yellow
X	X			/NT [3]	Neoprene	Teflon®	230°	

NOTES: Hypalon® is a registered trademark of DuPont Dow Elastomers. Teflon® is a registered trademark of the DuPont Company.

1. All elastomers include nylon reinforcing, except EE-9 which is steel cord.
   All materials meet or exceed the Rubber Expansion Joint Division, Fluid Sealing Association-REJ Division requirements for Standard Class I and II. EE-9 also meets Special Class II. For more information see The FSA Technical Handbook, Table 1.
   Materials NN, NP and NH meet all requirements of U.S.C.G.
   EPDM Materials good for up to 300°F for pressures 15 PSI or less.
2. Expansion joint "cover" (outside) can be Hypalon® painted on special order.
3. Products with Teflon® "tube" (inside) are not to be used for vacuum service.

Absorbs Vibration-Noise-Shock. The PROCO quiet operating Series 240 and Series 242 are a replacement for "sound transmitting" metallic expansion joints. Sound loses energy traveling axially through the elastomer bellows. Water hammer pumping impulses and water-borne noises are cushioned and absorbed by the molded lightweight thin-wall structure. Install the Series 240 or Series 242 in a system to enable isolated equipment to move freely on its vibration mountings; or to reduce vibration transmission when the piping section beyond the expansion joint is anchored or sufficiently rigid.

Flange Materials/Drilling. All PROCO Spherical 240 and 242 connectors are furnished complete with plated carbon steel flanges for corrosion protection. Series 240 and 242 Neoprene connectors — 12" and below — are tapped to ANSI 125/150# drilling. All other connectors come with standard drilled holes to the ANSI 125/150# standards (see Table 7 and Figures 3 & 4). Stainless steel flanges and other drilling standards such as: ANSI 250/300#, BS-10, DIN NP-10 and DIN NP-16 are also available from stock and are listed on Table 7. JIS-5K and JIS-10K are also available upon request.

Chemical Service Capability At Minimal Cost. Expensive, exotic metal expansion joints for chemical service can be replaced with the PROCO Series 240 or Series 242. Molded with low cost chemical resistant elastomers such as Neoprene, Nitrile, Hypalon®, EPDM and Chlorobutyl insures an expansion joint is compatible with the fluid being pumped or piped. (See Table 1 below). Use the PROCO "Chemical/Rubber Guide" to specify an elastomer recommendation compatible for your requirement.

Wide Service Range With Low Cost. Engineered to operate up to 300 PSIG and 265°F, the PROCO Series 240 and Series 242 can be specified for a wide range of piping requirements. Compared to conventional hand-built Spool Type arch, you will invest less money when specifying the mass-produced, consistent high quality, molded single or twin sphere expansion joints.

Large Inventories Mean Same-Day Shipment. PROCO maintains the largest inventory of spherical expansion joints in the Americas. Every size listed is in stock in several elastomers and comes with a choice of drilling patterns. Shipment is based on customer need. PROCO can ship same day as order placement. In fact, when it comes to rubber expansion joints, **if PROCO doesn't have your requirement…nobody does!**

Information • Ordering • Pricing • Delivery. Day or night, weekends and holidays … the PROCO phones are monitored 24 hours around the clock. When you have a question, you can call us.

Toll-Free Phone	800 / 344-3246 USA/CANADA
International Calls	209 / 943-6088
Fax	209 / 943-0242
E-mail	sales@procoproducts.com
Website	www.procoproducts.com

Weekday office hours are 5:30 a.m. to 5:15 p.m. (Pacific Time)

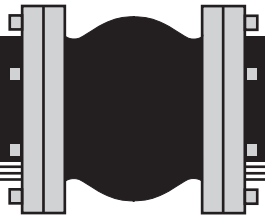

Protecting Piping And Equipment Systems From Stress/Motion

© PROCO PRODUCTS, INC.

Rev. 03 2/04

series 242 twin sphere expansion joints

Table 3: Sizes • Movements • Pressures • Flange Standards • Weights

Spec. 24.06

NOMINAL PIPE Size I.D.	Neutral Length	PROCO Style Number [1]	242 Movement Capability: From Neutral Position [2]					Pressure [4]		Standard Flange Bolting Dimensions					Weight in lbs [8]	
			Axial Compression Inches	Axial Extension Inches	Lateral Deflection Inches	Angular Deflection Degrees	Thrust [3] Factor	Positive [5] PSIG	Vacuum [6] Inches of Hg	Flange O.D. Inches	Bolt Circle Inches	Number of Holes	Size of Holes Inches	Bolt Hole [7] Thread	Exp. Joint & Flanges	Control Unit Set (2 Rod)
1	10.00	242-C	2.000	1.188	1.750	45	4.43	225	26	4.25	3.13	4	0.500	—	5.2	3.6
1.25	**7.0** 7.0 10.00	**242-A** 242-HA 242-C	2.000	1.188	1.750	45	6.34	225 300 225	26	4.63	3.5	4	0.500 0.500 0.500	1/2-13 UNC — —	5.3 6.5 6.2	3.5 3.5 3.6
1.5	6.00 6.00 **7.00** 7.00 10.00	242-B 242-HB **242-A** 242-HA 242-C	2.000	1.188	1.750	45	6.49	225 300 225 300 225	26	5.0	3.88	4	0.500 0.500 0.500 0.500 0.500	— — 1/2-11 UNC — —	6.1 7.6 6.8 8.3 7.7	4.6 4.6 4.8 4.8 5.1
2	6.00 6.00 **7.00** 7.00 10.00	242-B 242-HB **242-A** 242-HA 242-C	2.000	1.188	1.750	45	7.07	225 300 225 300 235	26	6.0	4.75	4	0.625 0.625 0.625 0.625 0.625	— — 5/8-11 UNC — —	9.0 10.5 9.0 10.5 10.2	6.6 6.6 7.0 7.0 7.3
2.5	6.00 6.00 **7.00** 7.00 10.00	242-B 242-HB **242-A** 242-HA 242-C	2.000	1.188	1.750	43	11.05	225 300 225 300 225	26	7.0	5.5	4	0.625 0.625 0.625 0.625 0.625	— — 5/8-11 UNC — —	12.9 15.3 13.3 15.8 14.5	7.6 7.6 8.0 8.0 8.4
3	**7.00** 7.00 9.00 10.00 12.00	**242-A** 242-HA 242-B 242-C 242-C	2.000	1.188	1.750	38	13.36	225 300 225 225 300	26	7.5	6.0	4	0.625 0.625 0.625 0.625 0.625	5/8-11 UNC — — — —	14.3 18.2 15.2 15.8 16.0	8.6 8.6 9.0 9.1 9.9
3.5	10.00	242-C	2.000	1.188	1.750	34	18.67	225	26	8.5	7.0	8	0.625	—	20.6	8.1
4	**9.00** 9.00 10.00 12.00	**242-A** 242-HA 242-C 242-C	2.000	1.375	1.562	34	22.69	225 300 225 225	26	9.0	7.5	8	0.625 0.750 0.750 0.750	5/8-11 UNC — — 3/4-10 UNC	20.3 26.4 21.3 22.0	8.0 8.0 8.2 8.2
5	**9.00** 9.00 10.00 12.00	**242-A** 242-HA 242-C 242-C	2.000	1.375	1.562	29	30.02	225 300 225 225	26	10.0	8.5	8	0.750 0.750 0.750 0.750	— — — —	24.5 31.4 25.5 26.0	8.3 8.3 9.1 9.1
6	**9.00** 9.00 10.00 12.00 14.00	**242-A** 242-HA 242-C 242-C 242-C	2.000	1.375	1.562	25	41.28	225 300 225 225 225	26	11.0	9.5	8	0.750 0.750 0.750 0.750 0.750	3/4-10 UNC — — — —	29.5 38.6 30.5 31.0 32.0	11.7 11.7 11.9 12.0 12.0
8	9.00 9.00 10.00 12.00 **13.00** 13.00 14.00	242-B 242-HB 242-C 242-C **242-A** 242-HA 242-C	2.375	1.375	1.375	19	63.62	225 300 225 225 225 300 225	26	13.5	11.75	8	0.750 0.750 0.750 0.750 0.750 0.750 0.750	— — — — 3/4-10 UNC — —	42.3 55.4 43.4 44.0 43.8 57.5 46.0	14.5 14.5 15.0 15.2 15.4 15.4 16.0
10	12.00 12.00 **13.00** 13.00 14.00	242-B 242-HB **242-A** 242-HA 242-C	2.375	1.375	1.375	15	103.87	225 275 225 275 225	26	16.0	14.25	12	0.875 0.875 0.875 0.875 0.875	— — 7/8-9 UNC — —	64.1 86.5 65.5 88.4 66.7	23.5 23.5 24.5 24.5 24.5
12	12.00 12.00 **13.00** 13.00 14.00	242-B 242-HB **242-A** 242-HA 242-C	2.375	1.375	1.375	13	137.89	225 275 225 275 225	26	19.0	17.00	12	0.875 0.875 0.875 0.875 0.875	— — 7/8-9 UNC — —	94.0 110.0 95.0 110.0 99.1	30.0 30.0 31.0 31.0 31.0
14	12.00 **13.75** 13.75	242-C **242-A** 242-HA	1.750	1.118	1.118	9	182.65	150 150 200	26	19.0	18.75	12	1.000 1.000 1.000	— — —	110.0 112.0 144.0	30.5 32.0 32.0
16	12.00 12.00 **13.75** 13.75	242-C 242-HC **242-A** 242-HA	1.750	1.118	1.118	8	240.53	125 175 125 175	26	23.5	21.25	16	1.000 1.000 1.000 1.000	— — — —	124.0 160.0 132.0 170.2	28.8 28.8 30.8 30.8
18	12.00 **13.75** 13.75	242-C **242-A** 242-HA	1.750	1.118	1.118	7	298.65	125 125 175	26	25.0	22.75	16	1.125 1.125 1.125	— — —	138.0 146.0 181.2	35.1 36.1 36.1
20	12.00 **13.75** 13.75	242-C **242-A** 242-HA	1.750	1.118	1.118	7	363.05	125 125 175	26	27.5	25.0	20	1.125 1.125 1.125	— — —	172.0 182.0 182.0	35.0 35.5 35.5
22	12.00	242-C	1.750	1.118	1.118	6	433.74	115	26	29.5	27.25	20	1.125	—	181.0	35.5
24	12.00 **13.75** 13.75	242-C **242-A** 242-HA	1.750	1.118	1.118	5	510.70	110 110 160	26	32.5	29.5	20	1.125 — 1.125	— — —	190.0 220.0 266.2	47.0 48.0 48.0
26	12.00	242-C	1.750	1.118	1.118	5	593.96	110	26	34.25	31.75	24	1.125	—	243.0	52.0
30	12.00	242-C	1.750	1.118	1.118	4	779.31	110	26	38.75	36.0	28	1.125	—	270.0	62.0

Standard PROCO Style 242-A Expansion Joints shown in Bold Type are considered Standards and inventoried in large quantities.

NOTES:
1. "HA", "HB", and "HC" denote Heavy Weight Construction.
2. Movements stated are non-concurrent.
3. To determine End Thrust: Multiply Thrust Factor by Operating Pressure of System. This is End Thrust in pounds.
4. Pressure rating is based on 170°F operating temperature. The pressure rating is reduced slightly at higher temperatures.
5. Pressures shown are maximum "operating pressure." Test pressure is 1.5 times "operating pressure." Burst pressure is approximately 4 times "operating pressure."
6. Vacuum rating is based on neutral installed length, without external load. Products should not be installed "extended" on vacuum applications.
7. Style 240-AV/NN (Neoprene elastomer only) expansion joints 1.25" I.D. – 12.0" I.D. come with tapped holes in lieu of drilled holes.
8. All expansion joints are furnished complete with flanges. Control units are required on applications where movements could exceed rated capabilities.

Installation Note:
Install at the neutral length dimension as shown in Tables 2 & 3.Make sure the mating flanges are **FLAT-FACE TYPE.** When attaching beaded end flanged expansion joints to raised face flanges, the use of ring gaskets are required to prevent metal flange faces from cutting rubber bead during installation. ***Care must be taken when pushing the joint into the breech between the mating flanges so as not to roll the leading edge of the joint out of its flange groove.***

Precompression Note:
Joint must be precompressed approximately 1/8" to 3/16" in order to obtain a correct installed face-to-face dimension.

Water Environment Federation® Preserving & Enhancing the Global Water Environment MEMBER
FLUID SEALING ASSOCIATION FSA
ISD INDEPENDENT SEALING DISTRIBUTORS
NAHAD NATIONAL ASSOCIATION OF HOSE AND ACCESSORIES DISTRIBUTORS

Table 4: Control Units/Unanchored

Control Units must be installed when pressures (test • design • surge • operating) exceed rating below:

Pipe Size	Series 240 P.S.I.G.	Series 242 P.S.I.G.
1" thru 4"	180	135
5" thru 10"	135	135
12" thru 14"	90	90
16" thru 24"	45	45
26" thru 30"	35	35

Table 5: Control Units

Control Rod Plate O.D. [1] (in)	Control Rod Plate Thickness (in)	Rod Diameter [2] (in)	Nominal Pipe Size (in)	Maximum Surge or Test Pressure of System/PSIG [3] — Number of Rods Required: 2	3	4
8.375	0.375	0.625	1	949	—	—
8.750	0.375	0.625	1.25	830	—	—
9.125	0.375	0.625	1.5	510	—	—
10.125	0.375	0.625	2	661	—	—
11.125	0.375	1.000	2.5	529	—	—
11.625	0.375	1.000	3	441	—	—
12.625	0.375	1.000	3.5	365	547	729
13.125	0.375	1.000	4	311	467	622
14.125	0.500	1.000	5	235	353	470
15.125	0.500	1.000	6	186	278	371
19.125	0.500	1.000	8	163	244	326
21.625	0.750	1.000	10	163	244	325
24.625	0.750	1.000	12	160	240	320
26.625	0.750	1.000	14	112	167	223
30.125	0.750	1.250	16	113	170	227
31.625	0.750	1.250	18	94	141	187
34.125	0.750	1.250	20	79	118	158
36.125	1.000	1.250	22	85	128	171
38.625	1.000	1.250	24	74	110	147
40.825	1.000	1.250	26	62	93	124
44.125	1.250	1.500	28	65	98	130
46.375	1.250	1.500	30	70	105	141

NOTES:
1. Control Rod Plate O.D. installed dimension is based on a **maximum** O.D. PROCO would supply. (See Figures 3 & 4)
2. Control Rod diameter is based on a **maximum** diameter PROCO would use to design a Control Rod.
3. Rod pressure ratings are based on metal conforming to F.S.A. standards and dimensions.

Table 6: Special Construction Pressures

Pipe Size	Series 240 & 242 Heavyweight P.S.I.G.
1" thru 8"	300
10" thru 12"	275
14"	200
16" thru 20"	175
22" thru 30"	160

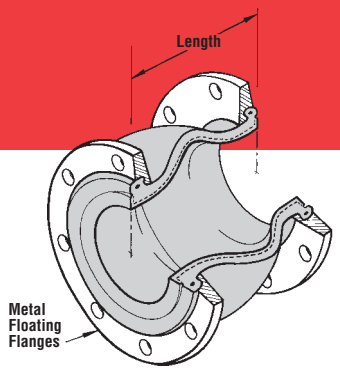

Figure 1.
Style 240
Single Sphere Connector

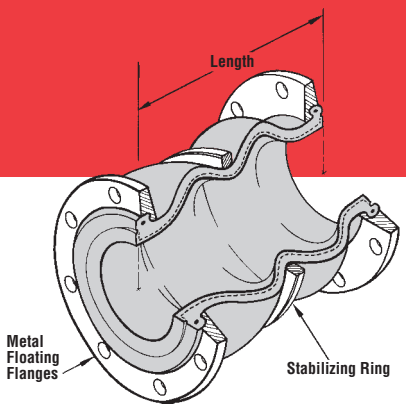

Figure 2.
Style 242
Twin Sphere Connector

Style 240 Single Sphere Connector

Figure 3.

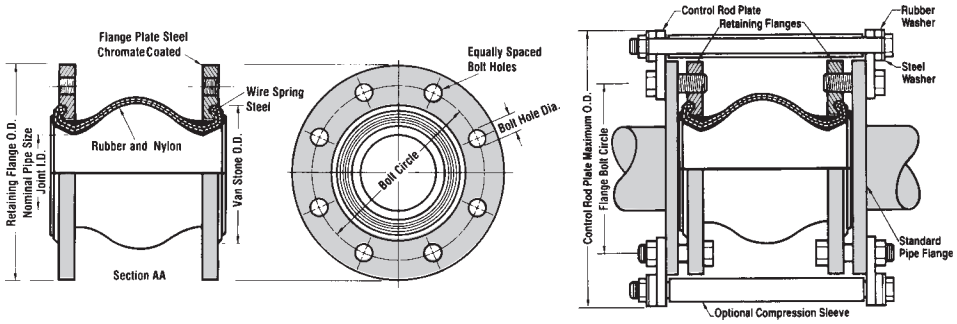

Style 242 Twin Sphere Connector

Figure 4.

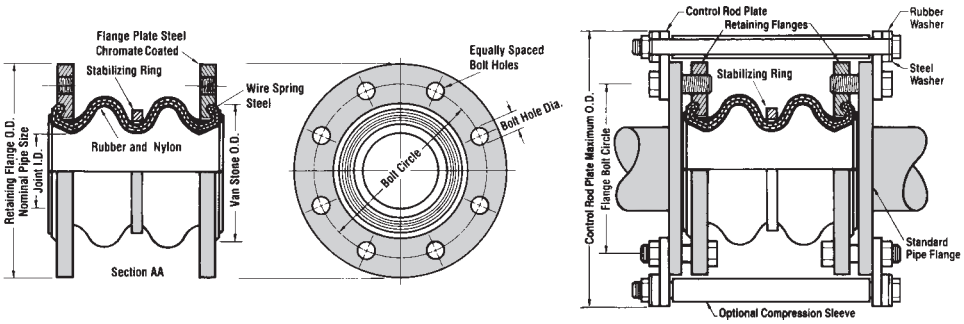

Control Rod/Unit Applications. Control unit assemblies are designed to absorb static pressure thrust developed at the expansion joint. When used in this manner, control unit assemblies are an additional safety factor, minimizing possible failure of the expansion joint or damage to equipment. (See Tables 4 & 5).

1. **Anchored Systems:** Control unit assemblies are not required in piping systems that are anchored on both sides of the expansion joint, provided piping movements are within the rated movements as shown in Tables 2 & 3.
2. **Unanchored Systems:** Control unit assemblies are always required in unanchored systems. Additionally, control unit assemblies must be used when maximum pressure exceeds the limits shown in Table 4 & 5, or the movement exceeds the rated movements as shown in Tables 2 & 3.
3. **Spring-Mounted Equipment:** Control unit assemblies are always recommended for spring-mounted equipment. Additionally, control unit assemblies must be used when maximum pressure exceeds the limits shown in Tables 4 & 5, or the movement exceeds the rated movements as shown in Tables 2 & 3.

Special Applications. Certain Style 240 (Single Sphere) and 242 (Twin Sphere) expansion joints are available in High-Pressure Designs. For specific pressures, see Table 6. Style designations are listed as 240-HW (sizes stocked in Table 2) and 242-HA, 242-HB & 242-HC (sizes stocked in Table 3.) The High-Pressure Design is recommended when the connector is to be installed into ANSI 250/300# piping systems.

drilling for series 240 and series 242 expansion joints

Table 7: Flange Drilling

NOMINAL PIPE SIZE	American 125/150# Conforms to ANSI B16.1 and B16.5						American 250/300# Conforms to ANSI B16.1 and B16.5					British Standard 10:1962 Conforms to BS 10 Table E					Metric Series Conforms to I.S.O. 2084-1974 Table NP10 Holes to I.S.O. /R-273					Metric Series Conforms to I.S.O. 2084-1974 Table NP16 Holes to I.S.O. /R-273				
Inch/ mm	Flange Thickness	Flange O.D.	Bolt Circle	No. of Holes	Drilled Hole Size	Threaded Hole Size	Flange Thickness	Flange O.D.	Bolt Circle	No. of Holes	Hole Size	Flange Thickness	Flange O.D.	Bolt Circle	No. of Holes	Hole Size	Flange Thickness	Flange O.D.	Bolt Circle	No. of Holes	Hole Size	Flange Thickness	Flange O.D.	Bolt Circle	No. of Holes	Hole Size
1 25	0.55 14.0	4.25 108.0	3.13 79.4	4 4	0.62 15.9	1/2 - 13 UNC	0.63 16.0	4.88 124.0	3.5 88.9	4 4	0.75 19.1	0.59 15.0	4.5 114.0	3.25 82.6	4 4	0.62 15.9	0.63 16.0	4.53 115.0	3.35 85.0	4 4	0.55 14.0	0.63 16.0	4.53 115.0	3.35 85.0	4 4	0.55 14.0
1.25 32	0.55 14.0	4.63 118.0	3.5 88.9	4 4	0.62 15.9	1/2 - 13 UNC	0.63 16.0	5.25 133.0	3.88 98.4	4 4	0.75 19.1	0.59 15.0	4.75 121.0	3.44 87.3	4 4	0.62 15.9	0.63 16.0	5.51 140.0	3.94 85.0	4 4	0.71 18.0	0.63 16.0	5.51 140.0	3.94 100.0	4 4	0.71 18.0
1.5 40	0.55 14.0	5.0 127.0	3.88 98.4	4 4	0.62 15.9	1/2 - 13 UNC	0.63 16.0	6.12 156.0	4.50 114.3	4 4	0.88 22.2	0.59 15.0	5.25 133.0	3.88 98.4	4 4	0.62 15.9	0.63 16.0	5.91 150.0	4.33 110.0	4 4	0.71 18.0	0.63 16.0	5.91 150.0	4.33 110.0	4 4	0.71 18.0
2 50	0.63 16.0	6.0 152.0	4.75 120.7	4 4	0.75 19.1	5/8 - 11 UNC	0.71 18.0	6.50 165.0	5.00 127.0	8 8	0.75 19.1	0.63 16.0	6.0 152.01	4.5 114.3	4 4	0.75 19.1	0.71 18.0	6.50 165.0	4.92 125.0	4 4	0.71 18.0	0.71 18.0	6.50 165.0	4.92 125.0	4 4	0.71 18.0
2.5 65	0.71 18.0	7.0 178.0	5.5 139.7	4 4	0.75 19.1	5/8 - 11 UNC	0.71 18.0	7.5 191.0	5.88 149.2	8 8	0.88 22.2	0.71 18.0	6.5 165.0	5.0 127.0	4 4	0.75 19.1	0.71 18.0	7.25 185.0	5.71 145.0	4 4	0.71 18.0	0.71 18.0	7.28 185.0	5.71 145.0	4 4	0.71 18.0
3 80	0.71 18.0	7.5 191.0	6.0 152.4	4 4	0.75 19.1	5/8 - 11 UNC	0.79 20.0	8.25 210.0	6.62 168.2	8 8	0.88 22.2	0.71 18.0	7.25 184.0	5.75 146.1	4 4	0.75 19.1	0.79 20.0	7.87 200.0	6.3 160.0	8 8	0.71 18.0	0.79 20.0	7.87 200.0	6.30 160.0	8 8	0.71 18.0
3.5 90	0.71 18.0	8.5 216.0	7.0 177.8	8 8	0.75 19.1	5/8 - 11 UNC	0.79 20.0	9.0 229.0	7.25 184.2	8 8	0.88 22.2	0.71 18.0	8.0 203.0	6.5 165.1	8 8	0.75 19.1	— —	— —	— —	— —	— —	— —	— —	— —	— —	— —
4 100	0.71 18.0	9.0 229.0	7.5 190.5	8 8	0.75 19.1	5/8 - 11 UNC	0.79 20.0	10.0 254.0	7.88 200.0	8 8	0.88 22.2	0.71 18.0	8.5 216.0	7.0 177.8	8 8	0.75 19.1	0.79 20.0	8.66 220.0	7.09 180.0	8 8	0.71 18.0	0.79 20.0	8.66 220.0	7.09 180.0	8 8	0.71 18.0
5 125	0.79 20.0	10.0 254.0	8.5 215.9	8 8	0.88 22.2	3/4 - 10 UNC	0.87 22.0	11.0 279.0	9.25 235.0	8 8	0.88 22.2	0.79 20.0	10.0 254.0	8.25 209.6	8 8	0.75 19.1	0.87 22.0	9.84 250.0	8.27 210.0	8 8	0.71 18.0	0.87 22.0	9.84 250.0	8.27 210.0	8 8	0.71 18.0
6 150	0.87 22.0	11.0 279.0	9.5 241.3	8 8	0.88 22.2	3/4 - 10 UNC	0.87 22.2	12.5 318.0	10.62 269.9	12 12	0.88 22.2	0.87 22.2	11.0 279.0	9.25 235.0	8 8	0.88 22.2	0.87 22.0	11.22 285.0	9.45 240.0	8 8	0.87 22.0	0.87 22.0	11.22 285.0	9.45 240.0	8 8	0.87 22.0
8 200	0.87 22.0	13.5 343.0	11.75 298.5	8 8	0.88 22.2	3/4 - 10 UNC	0.95 24.0	15.0 381.0	13.0 330.2	12 12	1.00 25.4	0.87 22.2	13.25 337.0	11.5 292.1	8 8	0.88 22.2	0.87 22.0	13.39 340.0	11.61 295.0	8 8	0.87 22.0	0.87 22.0	13.39 340.0	11.61 295.0	12 12	0.87 22.0
10 250	0.95 24.0	16.0 406.0	14.25 362.0	12 12	1.00 25.4	7/8 - 9 UNC	1.02 26.0	17.5 445.0	15.25 387.4	16 16	1.13 28.6	0.95 24.0	116.0 406.0	14.0 355.6	12 12	0.88 22.2	1.02 26.0	15.55 395.0	13.78 350.0	12 12	0.87 22.0	1.02 26.0	15.94 405.0	13.98 355.0	12 12	1.02 26.0
12 300	0.95 24.0	19.0 483.0	17.0 431.8	12 12	1.00 25.4	7/8 - 9 UNC	1.02 26.0	20.5 521.0	17.75 450.9	16 16	1.25 31.8	0.95 24.0	18.0 457.0	16.0 406.4	12 12	1.00 25.4	1.02 26.0	17.52 445.0	15.75 400.0	12 12	0.87 22.0	1.02 26.0	18.11 460.0	16.14 410.0	12 12	1.02 26.0
14 350	1.02 26.0	21.0 533.0	18.75 476.3	12 12	1.13 28.6	1 - 8 UNC	1.10 28.0	23.0 584.0	20.25 514.4	20 20	1.25 31.8	1.02 26.0	20.75 527.0	18.5 469.9	12 12	1.00 25.4	1.10 28.0	19.88 505.0	18.11 460.0	16 16	0.87 22.0	1.10 28.0	20.47 520.0	18.50 470.0	16 16	1.02 26.0
16 400	1.10 28.0	23.5 597.0	21.25 539.8	16 16	1.13 28.6	1 - 8 UNC	1.18 30.0	25.5 648.0	22.5 571.5	20 20	1.38 34.9	1.10 28.0	22.75 578.0	20.5 520.7	12 12	1.00 25.4	1.18 30.0	22.24 565.0	20.28 515.0	16 16	1.02 26.0	1.18 30.0	22.83 580.0	20.67 525.0	16 16	1.18 30.0
18 450	1.18 30.0	25.0 635.0	22.75 577.9	16 16	1.25 31.8	1 1/8 - 7 UNC	1.18 30.0	28.0 711.0	24.75 628.7	24 24	1.38 34.9	1.18 30.0	25.25 641.0	23.0 584.2	16 16	1.00 25.4	1.18 30.0	24.21 615.0	22.24 565.0	20 20	1.02 26.0	1.18 30.0	25.20 640.0	23.03 585.0	20 20	1.18 30.0
20 500	1.18 30.0	27.5 699.0	25.0 635.0	20 20	1.25 31.8	1 1/8 - 7 UNC	1.18 30.0	30.5 775.0	27.0 685.8	24 24	1.38 34.9	1.18 30.0	27.75 705.0	25.25 641.4	16 16	1.00 25.4	1.18 30.0	26.38 670.0	24.41 620.0	20 20	1.02 26.0	1.18 30.0	28.15 715.0	25.59 650.0	20 20	1.30 33.0
22 550	1.18 30.0	29.5 749.0	27.25 692.2	20 20	1.38 34.9	1 1/4 - 7 UNC	1.18 30.0	33.0 838.0	29.5 743.0	24 24	1.38 34.9	1.18 30.0	30.0 762.0	27.5 698.5	16 16	1.13 28.6	1.18 30.0	28.74 730.0	26.57 675.0	20 20	1.18 30.0	1.18 30.0	30.51 775.0	27.95 710.0	20 20	1.30 33.0
24 600	1.18 30.00	32.06 813.0	29.5 749.3	20 20	1.38 34.9	1 1/4 - 7 UNC	1.18 30.0	36.0 914.0	32.0 812.8	24 24	1.62 41.3	1.18 30.0	32.5 826.0	29.75 755.7	16 16	1.25 31.8	1.18 30.0	30.71 780.0	28.54 725.0	20 20	1.18 30.0	1.18 30.0	33.07 840.0	30.31 770.0	20 20	1.42 36.0
26 650	1.26 32.0	34.25 870.0	31.75 806.5	24 24	1.38 34.9	1 1/4 - 7 UNC	1.26 32.0	38.25 972.0	34.5 876.0	28 28	1.75 44.5	— —	— —	— —	— —	— —	1.26 32.0	32.87 835.0	30.71 780.0	24 24	1.18 30.0	1.26 32.0	33.86 860.0	31.10 790.0	24 24	1.42 36.0
30 750	1.26 32.0	38.75 984.0	36.0 914.4	28 28	1.38 34.9	1 1/4 - 7 UNC	1.26 32.0	43.0 1092.0	39.25 997.0	28 28	2.00 50.8	1.26 32.0	39.25 997.0	36.5 927.1	20 20	1.38 34.9	1.26 32.0	37.99 965.0	35.43 900.0	24 24	1.30 33.0	1.26 32.0	38.19 970.0	35.43 900.0	24 24	1.42 36.0

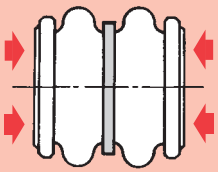

Axial Compression

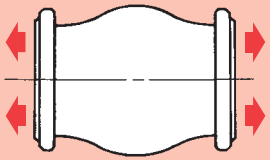

Axial Elongation

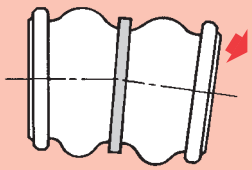

Angular Movement
Bending About the Centerline

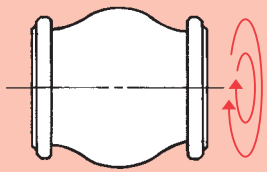

Torsional Movement
Rotation About the Centerline (twist)

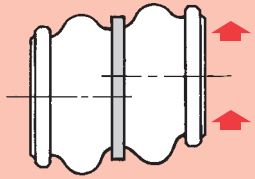

Lateral Movement
Shear or Perpendicular to Centerline

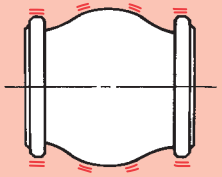

Absorbing Vibration

PROCO™ Series 240 and 242 are Designed to Absorb Different Movements Concurrently

The largest inventory in North America!

Spec. 24.06

PROCO™ PRODUCTS, INC.

PROCO has a vast array of Style/Elastomer configurations. We have an inventory to 72" diameter and can ship your requirement the same business day. With an average of over 20 years experience in the expansion joint industry, our sales staff can answer any of your questions and help to solve your problems.

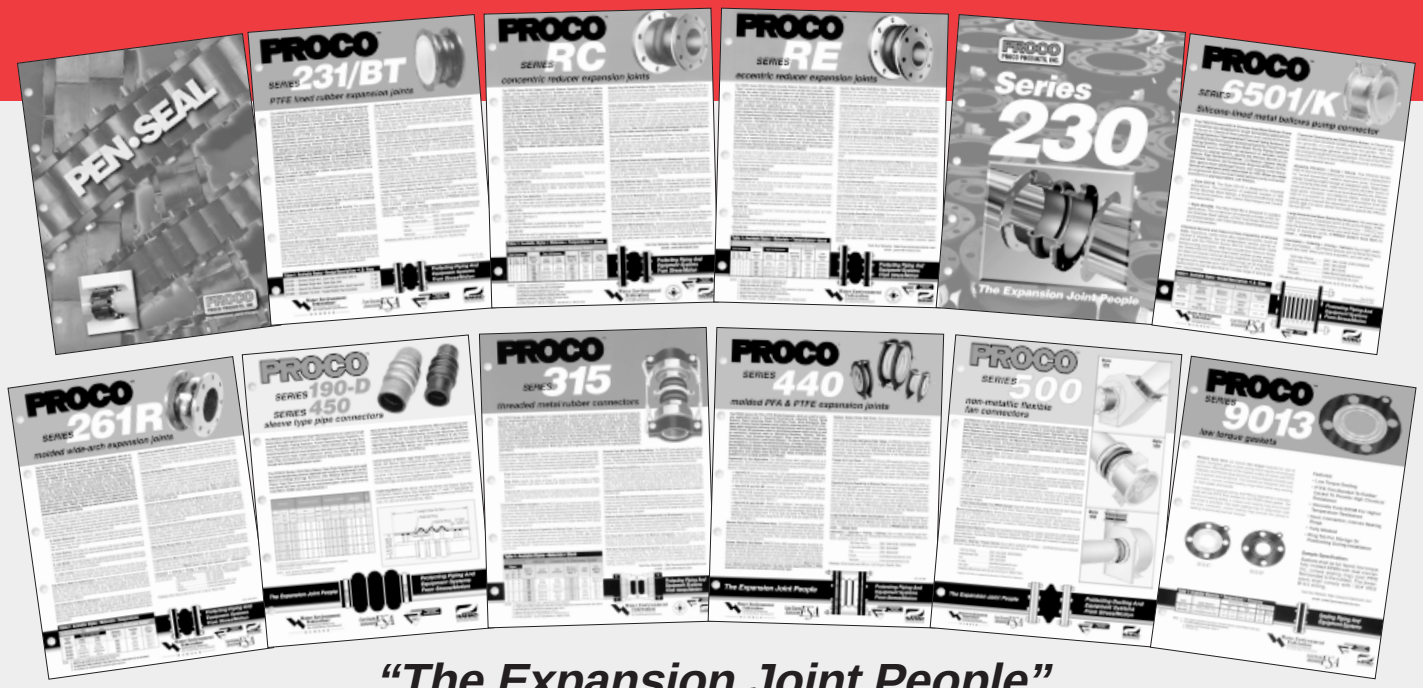

"The Expansion Joint People"

Demand the best — insist on PROCO™.

- **Same-day shipping**
- **Knowledgeable sales staff that has an average of 20 years experience with expansion joints**
- **Daily UPS® pick-up**
- **Preselected freight carriers to minimize "interline transfer"**
- **Emergency service for nights, weekends, and even holidays**
- **Complete expansion joint product line**
- **Largest inventory in North America with warehouses in**
  Stockton, CA
  Houston, TX
  Atlanta, GA

Same Day Shipment From Order Placement

PROCO
PROCO PRODUCTS, INC.

2431 North Wigwam Dr. (95205)
P.O. Box 590 • Stockton, CA
95201-0590 • USA

TOLL-FREE PHONE: (800) 344-3246 NATIONWIDE AND CANADA
FACSIMILE: (209) 943-0242
(209) 943-6088 INTERNATIONAL
email: sales@procoproducts.com
website: http://www.procoproducts.com

DISTRIBUTED BY:

Warning: Expansion joints may operate in pipelines or equipment carrying fluids and/or gases at elevated temperatures and pressures. Normal precautions should be taken to make sure these parts are installed correctly and inspected regularly. Precautions should be taken to protect personnel in the event of leakage or splash. Note: Piping must be properly aligned and anchored to prevent damage to an expansion joint. Movement must not exceed specified ratings and control units are always recommended to prevent damage in the event other anchoring in the system fails. Properties applications shown throughout this data sheet are typical. This information does not constitute a warranty or representation and we assume no legal responsibility or obligation with respect thereto and the use to which such information may be put. Your specific application should not be undertaken without independent study and evaluation for suitability.

CALGON CARBON CORPORATION	HOSE FITTINGS MATERIAL SPECIFICATION	SPEC NO:
	UNIVERSAL HOSE COUPLING - MALLEABLE IRON	32.40

MATERIAL: Universal Hose Coupling, Malleable iron, male pipe thread on one end with other end for connecting to universal coupling.

RATING: 90 psig @ 140 DEG. F.

MANUFACTURER: Chicago Pneumatic, or equal.

SIZES:
1/4" - C-36844Y
3/8" - C-36843Y
1/2" - C-36842Y
3/4" - C-36841Y
1" - C-36840Y

NOTE: Above model number includes one standard type rubber gasket No. C-101158Y for air service. For water service use neoprene gasket No. C-101160Y.

Issue Date: Revision Date:

Approved by Joseph P. McMahon on 10/30/98

HOSE END

Ductile Iron (machined serrations)

hose size	part number	list each
3/8	UH-38	7.98
1/2	UH-2	4.99
5/8	UH-58	7.61
3/4	UH-3	5.15
1	UH-4	6.88

Brass (machined serrations)

3/8	UHB-38	–
1/2	UHB-2	12.60
5/8	UHB-58	–
3/4	UHB-3	14.49
1	UHB-4	18.59

316 Stainless (machined serrations)

1/2	UHSS-2	43.47
3/4	UHSS-3	36.71
1	UHSS-4	40.57

FEMALE NPT

Ductile Iron

npt size	part number	list each
3/8	UF-38	6.88
1/2	UF-2	6.30
3/4	UF-3	5.93
1	UF-4	7.72

Brass

3/8	UFB-38	–
1/2	UFB-2	–
3/4	UFB-3	–
1	UFB-4	–

316 Stainless

1/2	UFSS-2	44.71
3/4	UFSS-3	38.75
1	UFSS-4	41.73

MALE NPT

Ductile Iron

npt size	part number	list each
3/8	UM-38	6.88
1/2	UM-2	5.72
3/4	UM-3	6.09
1	UM-4	6.83

Brass

3/8	UMB-38	–
1/2	UMB-2	–
3/4	UMB-3	–
1	UMB-4	–

316 Stainless

1/2	UMSS-2	44.71
3/4	UMSS-3	38.75
1	UMSS-4	41.73

BLANK END

Ductile Iron

size	part number	list each
All	UB	9.82

Brass

All	UBB	–

THREE WAY

Ductile Iron

size	part number	list each
All	UTW	17.85

Brass

All	UTWB	–

UNIVERSAL WASHER

Nitrile

size	part number	list each
All	UG	0.53

Never use Universal Washers in UniversaLock Couplings

SAFETY CLIP

size	part number	list each
All	SC	0.26

TWO-BOLT UNIVERSAL CLAMP

Ductile Iron

hose o.d. min to max	part no.	list each
3/4 to 15/16	UC-2	5.78
1 to 1-1/4	UC-3	5.83
1-1/4 to 1-17/32	UC-4	10.08

DISTRIBUTOR AUTHORIZATION

Safety is of paramount concern to everyone. Due to the volatile nature of compressed air, and in accordance with our ISO 9000 quality system, we reserve the right to restrict sales of our UniversaLock® Couplings to only those distributors authorized by Campbell Fittings.

Please contact our customer service department for more information.

HOSE END

Ductile Iron (machined serrations)

hose size	part number	list each
1/2	ULH-2	19.10
3/4	ULH-3	19.10
1	ULH-4	19.10

MALE END

Ductile Iron

npt size	part number	list each
1/2	ULM-2	19.10
3/4	ULM-3	19.10
1	ULM-4	19.10

FEMALE END

Ductile Iron

npt size	part number	list each
1/2	ULF-2	19.10
3/4	ULF-3	19.10

UNIVERSALOCK WASHER

Nitrile

size	part number	list each
All	ULW	2.13

Never use UniversaLock Washers in standard Universal Couplings

CALGON CARBON CORPORATION	HOSE FITTINGS MATERIAL SPECIFICATION	SPEC NO:
	QUICK DISCONNECT ADAPTER - NYLON	32.45

MATERIAL: Quick Disconnect Adapter, nylon, male NPT on one end with other end for connecting to quick disconnect coupler.

RATING: 70 psig to 175 psig @ 0 DEG. F. to 150 DEG. F. depending on size.

MANUFACTURER: Dixon, NY-Last

SIZES: 1/2" thru 4"

MODELS: Dixon "Andrews" line - type F, NY-Last Style F, or equal

Issue Date: 01/01/89 Revision Date: 09/15/99

Approved by Matthew R. McGowan on 09/27/99

Couplers & Adapters

Spec. 32.45

Nylon, Glass-Filled

FEATURES

- *Safety latches available on all couplers ranging in size from 1-1/4" to 4"*
- *Lightweight-1/2 the weight of aluminum*
- *Strong–resists cross threading, thread seizure and "out-of-round" condition*
- *Chemical resistant to most acids (Refer to chemical resistance table for specific recommendation)*
- *Non-conducting*
- *All couplers feature stainless steel handles & pins, blue nylon handles available*
- *Interchangeable with other couplers and adapters – manufactured to MIL-spec*
- *EPDM gaskets furnished standard. Buna-N, Viton and Neoprene also available*
- *Temperature range under normal conditions -30°F to 200°F*

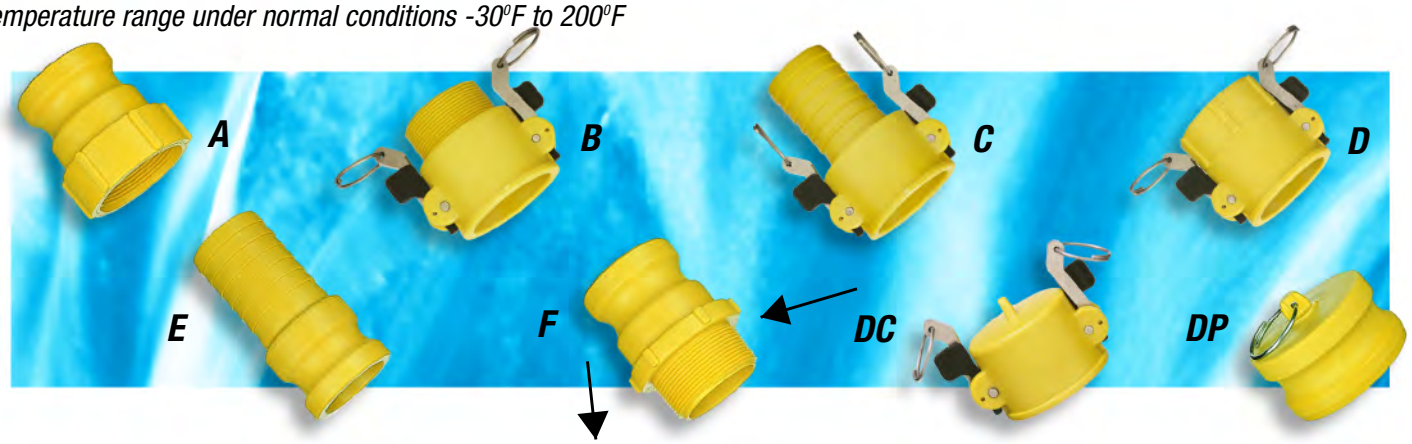

Price Lookup

ITEM	DESCRIPTION	1/4"	3/8"	1/2"	5/8"	3/4"	1"	1-1/4"	1-1/2"	2"	3"	4"	3"x 4"
A	Male Adapter/Female Thread	025 A-N	037 A-N	050 A-N		075 A-N	100 A-N	125 A-N	150 A-N	200 A-N	300 A-N	400 A-N	
	Std. Package — Qty.	125	125	125		125	80	50	50	80	44	18	
	Std. Package — Wt.	7#	7#	7#		7#	7#	11#	9#	22#	18#	18#	
B	Female Coupler/Male Thread			050 B-N		075 B-N	100 B-N	125 B-N	150 B-N	200 B-N	300 B-N*	400 B-N	
	Std. Package — Qty.			100		100	80	60	60	50	25	20	
	Std. Package —Wt.			14#		15#	14#	27#	27#	26#	25#	28#	
C	Female Coupler/Hose Shank			050 C-N	062 C-N	075 C-N	100 C-N	125 C-N	150 C-N	200 C-N	300 C-N	400 C-N	430 C-N
	Std. Package — Qty.			100		90	60	65	65	44	18	12	—
	Std. Package — Wt.			15#		14#	11#	33#	32#	27#	22#	21#	—
D	Female Coupler/Female Thread	025 D-N	037 D-N	050 D-N		075 D-N	100 D-N	125 D-N	150 D-N	200 D-N	300 D-N*	400 D-N	
	Std. Package — Qty.	100	100	100		100	60	70	70	50	25	16	
	Std. Package — Wt.	16#	16#	16#		16#	11#	37#	35#	29#	21#	24#	
E	Male Adapter/Hose Shank			050 E-N	062 E-N	075 E-N	100 E-N	125 E-N	150 E-N	200 E-N	300 E-N	400 E-N	
	Std. Package — Qty.			125		75	45	50	45	30	32	16	
	Std. Package — Wt.			5#		5#	5#	9#	8#	9#	18#	18#	
F	Male Adapter/Male Thread			050 F-N		075 F-N	100 F-N	125 F-N	150 F-N	200 F-N	300 F-N	400 F-N	
	Std. Package — Qty.			90		90	100	120	120	75	33	12	
	Std. Package — Wt.			5#		5#	10#	23#	23#	22#	20#	11#	
DC	Female Coupler Cap					075 DC-N	100 DC-N		150 DC-N	200 DC-N	300 DC-N	400 DC-N	
	Std. Package — Qty.					125	80		80	70	30	20	
	Std. Package — Wt.					18#	13#		37#	35#	28#	22	
DP	Male Adapter Plug					075 DP-N	100 DP-N		150 DP-N	200 DP-N	300 DP-N	400 DP-N	
	Std. Package — Qty.					150	100		45	25	25	36	
	Std. Package — Wt.					8#	7#		6#	6#	10#	23#	

* Coupler supplied with rings only

Size	*Operating Pressure*
1/4"-1"	*175 psi max @ 70° F*
11/4"-2"	*150 psi max @ 70° F*
3"	*100 psi max @ 70° F*
4"	*50 psi max @ 70° F*

- On 1/4", 3/8" & 1/2" sizes the coupler and adapter portion is to 3/4" standard.
- On 1-1/4" size the coupler and adapter is to 1-1/2" standard.
- British thread also available.

WARNING: *Do not operate couplings under pressure or with liquid in the lines. To prevent accidental opening fully engage and secure handles prior to pressurizing.*

Bee Valve Inc.

	HOSE FITTINGS MATERIAL SPECIFICATION	SPEC NO:
CALGON CALGON CARBON CORPORATION	QUICK DISCONNECT FEMALE COUPLER - ALUMINUM	32.61

MATERIAL: Quick disconnect female coupler, Aluminum, Buna-N gaskets, male NPT on one end with other end for connecting to quick disconnect male adapter.

RATING: 150 psig @ 100 DEG. F.

MANUFACTURER: Dixon, Ever-Tite

SIZES: 1/2" thru 4"

MODELS: Dixon "Andrews" line - type B, Ever-Tite Part B, or equal.

Issue Date: 07/16/92 Revision Date: 09/15/99

Approved by Matthew R. McGowan on 09/27/99

"EZ BOSS-LOCK"

No more fumbling with clamps, wire, clips or pins . .
Just close the handles and the locking mechanism is engaged.

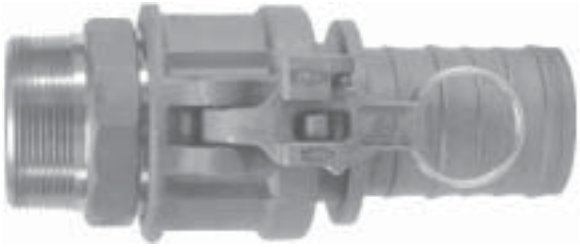

Unlike other safety couplings . . .

- **The EZ Boss-Lock is extremely EASY TO OPEN!!!** *The release lever is under your thumb when you want to open the fitting.* **ERGONOMIC.**
- **The EZ Boss-Lock is resistant to accidental disconnection when being dragged.** *The release lever opens in the direction opposite to the cam arm, so movements that tend to open the release lever also tend to close the cam arm!!!*
- **The EZ Boss-Lock alerts you if it is not properly engaged.** *If the rotating lever is not flush with the handle, it is not properly engaged.*
- **The EZ Boss-Lock has no sliding pins to jam.** *The EZ Boss-Lock's rotating action helps keep the locking device free of debris.*
- **The EZ Boss-Lock has no sliding pins to pop open.** *The EZ Boss-Lock is designed to protect critical parts from impact and to withstand rugged use.*
- **The EZ Boss-Lock can be supplied with special shanks custom suited to your needs.** *The EZ Boss-Lock is available with Swaged and PF shank designs, for hard to couple chemical hoses.*
- **The EZ Boss-Lock cam arm assemblies are made of investment cast Stainless Steel with plated Carbon Steel pull rings.**
- **The EZ Boss-Lock is easier to insert into the hose tubes on Tank Trucks, and easier to use in restricted spaces.** *This is due to the smaller maximum O.D. and a more snag free exterior.*
- **The EZ Boss-Lock Cam Arm assemblies can be retrofitted onto Undamaged Stainless Steel Boss-Lock.** *This allows you to protect your investment in Stainless Steel Boss-Lock couplings while you upgrade.*
- **The EZ Boss-Lock is Made in the USA.**

All measurements in this brochure are for reference only and are subject to change. Where dimensions are critical, please consult the factory. For products not shown or special application questions, please consult the factory.

CAM & GROOVE LINE DRAWINGS

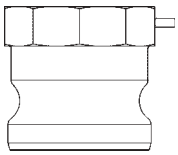

TYPE A
(male adapter x female NPT)

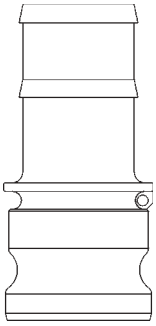

TYPE E
(male adapter x hose shank)

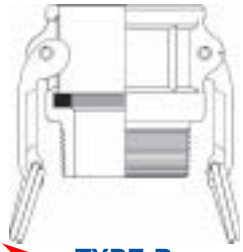

TYPE B
(female coupler x male NPT)

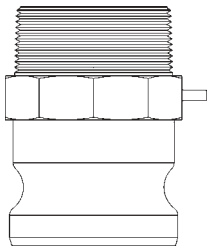

TYPE F
(male adapter x male NPT)

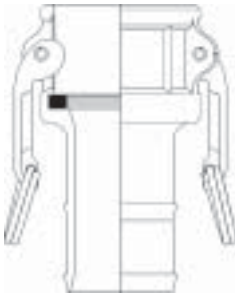

TYPE C
(female coupler x hose shank)

TYPE DC *
(dust cap)

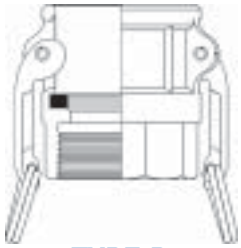

TYPE D
(female coupler x female NPT)

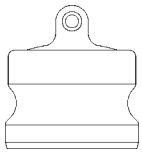

TYPE DP *
(dust plug)

NOTE: Line drawings are representative of the Dixon / "Andrews" line of cam and groove.

** Dust Caps and Dust Plugs are NOT to be used in Pressure Applications for safety and environmental reasons.*

SAFETY ALERT

WARNING:
UNDER NO CIRCUMSTANCES should Cam and Groove couplings be used for compressed air or steam service!

Dixon "Andrews" Type B Couplers

Female Coupler x Male NPT

	Aluminum	Aluminum Hard Coat	Brass	Unplated Malleable Iron	Stainless Steel
Size	*Part #*	*Part #*	*Part #*	*Part #*	*Part #*
1/2"	*50-B-AL*	-----	*50-B-BR*	-----	*50-B-SS*
3/4"	*75-B-AL*	-----	*75-B-BR*	-----	*75-B-SS*
1"	*100-B-AL*	-----	*100-B-BR*	-----	*100-B-SS*
1 1/2"	*150-B-AL*	*150-B-ALH*	*150-B-BR*	*150-B-MI*	*150-B-SS*
2"	*200-B-AL*	*200-B-ALH*	*200-B-BR*	*200-B-MI*	*200-B-SS*
2 1/2"	-----	-----	-----	-----	*250-B-SS*
3"	*300-B-AL*	*300-B-ALH*	*300-B-BR*	-----	*300-B-SS*
4"	*400-B-AL*	*400-B-ALH*	*400-B-BR*	*300-B-MI*	*400-B-SS*
5"	*500-B-AL*	-----	-----	*400-B-MI*	*600-B-SS*
6"	*600-B-AL*	*600-B-ALH*	-----	-----	-----
8" *	*800-B-AL*	-----	-----	-----	-----

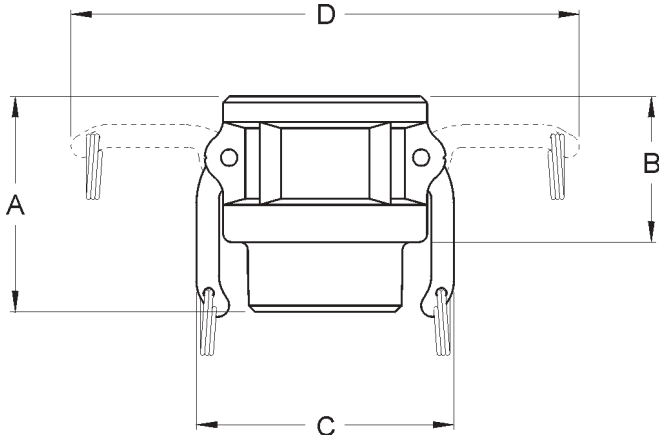

* "Andrews" and "Boss-Lock" Cam and Groove Couplings **DO NOT INTER CHANGE IN THE 8" SIZE.**

SAFETY ALERT

- See "Boss-Lock" for 1 1/4" and 2 1/2" couplers.
- The 8" "Andrews" design has 4 cam arms.
- **Finger rings are not supplied on 1/2" - 1" "Andrews" couplings.**
- 1/2" Andrews has only one cam arm.

ALUMINUM, BRASS and MALLEABLE IRON DIMENSIONS

Size	1/2"	3/4"	1"	1 1/4"	1 1/2"	2"	2 1/2"	3"	4"	5"	6"	8"
A Overall Length	2	2 3/16	2 17/32	2 7/8	2 13/16	3 9/32	------	3 15/16	4 1/32	4 3/16	4 7/16	8 7/16
B Coupler Length	1 7/32	1 3/8	1 19/32	1 31/32	1 29/32	2 7/32	------	2 15/16	2 11/32	2 5/16	2 5/8	3 13/16
C Distance Across Closed Cam Arms	1 17/32	2 1/8	2 7/16	3 1/4	3 9/16	3 15/16	------	5 15/32	6 9/16	7 9/16	10 3/32	12 1/32
D Distance Across Open Cam Arms	2 11/16	4 3/8	5 3/16	7 5/32	7 7/16	7 13/16	------	10 3/32	11 3/16	12 3/16	16 1/4	19 31/32

STAINLESS STEEL DIMENSIONS

Size	1/2"	3/4"	1"	1 1/4"	1 1/2"	2"	2 1/2"	3"	4"	5"	6"	8"
A Overall Length	1 7/8	2 1/8	2 9/16	2 27/32	2 31/32	3 9/32	3 7/16	3 59/64	4 1/64	------	4 35/64	------
B Coupler Length	1 1/4	1 1/4	1 9/16	1 29/32	1 29/32	2 7/32	2 1/4	2 9/32	2 9/32	------	2 19/32	------
C Distance Across Closed Cam Arms	1 17/32	2 1/8	2 7/16	3 1/4	3 9/16	3 15/16	4 7/16	5 15/32	6 9/16	------	10 3/32	------
D Distance Across Open Cam Arms	2 11/16	4 3/8	5 3/16	7 5/32	7 7/16	7 13/16	8 11/32	10 3/32	11 3/16	------	16 1/4	------

PRESSURE INDICATING GAGES
MATERIAL SPECIFICATION

SPEC NO:

CALGON CARBON CORPORATION

PI-213 TO PI-218; PI-448 TO PI-560

IS008

MATERIAL:	As listed below:
Case:	4-1/2" size, stainless steel, steel, brass, aluminum and phenol.
Socket:	1/2" NPT male bottom connection, stainless steel.
Dial:	White litho with black figures.
Pointer:	Balanced micrometer.
Bourdon Tube:	Stainless steel.
Movement:	Stainless steel and Delrin.
Accuracy:	1% of full range.
Liquid Fill:	None

RATING: Temperature range of -4 DEG. F. to +150 DEG. F.

MANUFACTURER: Ashcroft, WIKA

MODELS: Ashcroft "Duragauge" - 1279, WIKA 232.34

NOTES: As listed below:
1. Spec. IS008 replaces Spec. No. 7209A-CS263
2. This specification replaces the Specs. listed below.

RANGE: As listed below:

ITEM NO.	SCALE RANGE		REPLACES THESE ITEMS
PI-213	0-15 PSIG	PI-101,7	SPEC. No. 7209A-CS161,2 (IS001,2)
PI-214	0-30 PSIG	PI-102,8	SPEC. No. 7209A-CS161,2 (IS001,2)
PI-215	0-60 PSIG	PI-103,9	SPEC. No. 7209A-CS161,2 (IS001,2)
PI-216	0-100 PSIG	PI-104,10	SPEC. No. 7209A-CS161,2 (IS001,2)
PI-217	0-160 PSIG	PI-105,11	SPEC. No. 7209A-CS161,2 (IS001,2)
PI-218	0-200 PSIG	PI-106,12	SPEC. No. 7209A-CS161,2 (IS001,2)
PI-448	0-300 PSIG		
PI-557	0-300 PSIG *		
PI-449	0-400 PSIG		
PI-556	0-400 PSIG *		
PI-450	0-800 PSIG		
PI-558	0-800 PSIG *		
PI-559	0-1500 PSIG		
PI-560	0-1500 PSIG *		*With Steam Coil Siphon

GENERAL REQUIREMENTS:
Tag each assembly with Item No. and Service.

Issue Date: 01/01/89 Revision Date: 12/16/2005

Approved by Gerald Kirner on 03/21/2006

WIKA

Bourdon Tube Pressure Gauges

Solid-Front Turret Style Thermoplastic Case

4½" & 6" Process Industry Series

316SS Wetted Parts • Type 23X.34

Pressure Gauges

Application
Industrial type suitable for corrosive environments where the fluid medium does not clog connection or corrode wetted part material. Field convertible to a liquid filled gauge for severe vibration conditions. Solid front, blow-out back case design meets safety requirements of ASME B40.1.

Size
4½"(115mm) & 6" (152 mm) dial size

Accuracy
± 0.5% of span (ASME B40.1 Grade 2A)

Ranges
Vacuum / Compound to 30"HG / 0 / 400 PSI
Pressure from 15 PSI to 30,000 PSI
or other equivalent units of pressure or vacuum
Receiver scale: 3...15psi

Working Range
Steady: Full scale value
Fluctuating: 0.9 x full scale value
Short time: 1.5 x full scale value

Operating Temperature
Ambient: -40°F to 150°F (-40°C to 65.6°C) Note 1

Media: 212°F- max.
**500°F - dry gauge (intermittent) Optional
**250°F - Liquid filled (intermittent) Optional
**300°F - Dampened Movement (4½" only)

Temperature Error
Additional error when temperature changes from reference temperature of 68°F (20°C), approximately ±1.5% per 100°F (55.5°C∆ T) rising or falling. Percentage of span.

Standard Features

Connection
Material: 316 stainless steel
Lower mount (LM) + Lower back mount (LBM)
1/4" NPT and 1/2" NPT have M4 internal tap - STD.

Bourdon Tube
Material: 316 stainless steel
30" Hg (Vac) to 1000 PSI C-type
1500 PSI to 10,000 PSI helical type

Movement
Stainless steel
Internal stop pin at 1.3 times full scale value
Overload and underload stops- standard
Optional: dampened movement

Shock & Vibration
Shock resistance up to 100G
Optional: up to 400G
Optional: vibration resistance up to 10G

Cycle Testing
400,000-2,000,000*cycles, depending upon pressure range (4½" only)
*liquid filled

Dial
White aluminum with black lettering. Stop pin at 6 o'clock

Pointer
Adjustable black alu

Case
Black glass reinforced thermoplastic (PBTP)
Solid front, blow-out back
Turret style case with built in rear flange lugs

Weather Protection
Weather resistant (NEMA 3 / IP 54) - dry case
Weather tight (NEMA 4X / IP 65) - liquid-filled case

Standard Scale
PSI
Receiver scales 0/100% linear, 0/10 sq.rt.

Window Gasket
Buna-N

Window
Acrylic

Case Filling
None - 232.34
Glycerine - 233.34
Dampened movement - 239.34

Order Options (min. order may apply)
Overpressure protection up to 5x scale (limited ranges only)
Threaded restrictor
Silicone dampened movement
Panel mounting adaptor kit (field assembled) (4½" only)
Movement with PTFE coated gears
Glycerine, silicone, or fluorolube case filling Note 1
Field conversion kit for glycerine, silicone, or fluorolube fill
Cleaned for oxygen service
Glass window
Safety glass window
Externally adjustable red drag pointer (max. hand) (4½" only)
Externally adjustable red mark pointer (4½" only)
Special connections limited to socket square size
DIN standards
Custom dial layout
Other pressure scales available:
Bar, kPa, MPa, Kg/cm², and dual scales
Alarm contact switches (4½" only)
Shock resistant up to 400G
Vibration resistant up to 10G
Luminescent dial (4½" only)
Alloy steel socket connection (4½" only)
Chemical seals available

Note 1 Temperature Ranges (Liquid filled gauges)
Glycerine: -4°F to 150°F (-20°C to 65.6°C)
Silicone: -40°F to 150°F (-40°C to 65.6°C)

Dimensions:

Spec. PI-217

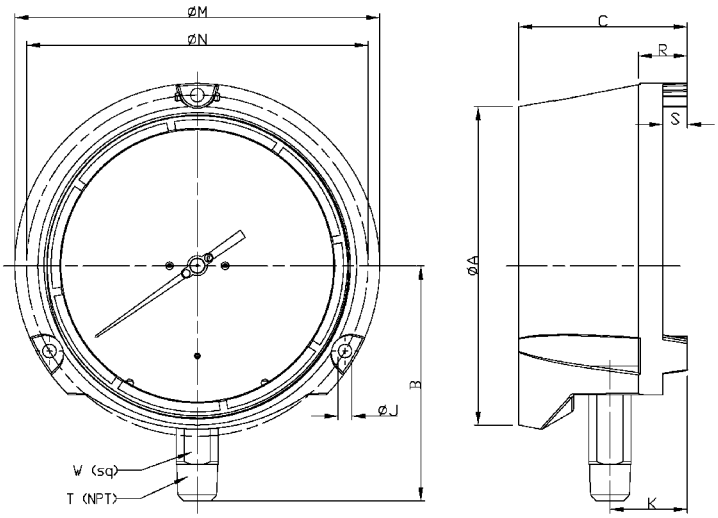

TYPE	SIZE	WEIGHT	KEY	A	B	C	J	K	M	N	R	S	T	W	
2XX.34 LM	4.5"	2lbs.* (dry)	mm	128	103	84	6.3	40	148	136.5	25	12.5	--	22	
			inch	5	4.06	3.31	0.248	1.57	5.83	5.37	0.99	0.49	1/2"	0.87	* liquid filled 3lbs.
	6"	3lbs.* (dry)	mm	164	122.5	88	7.1	40.2	190	177.8	25.4	12.7	--	22	
			inch	6.46	4.82	3.46	0.28	1.58	7.5	7	1	0.5	1/2"	0.87	* liquid filled 4lbs.

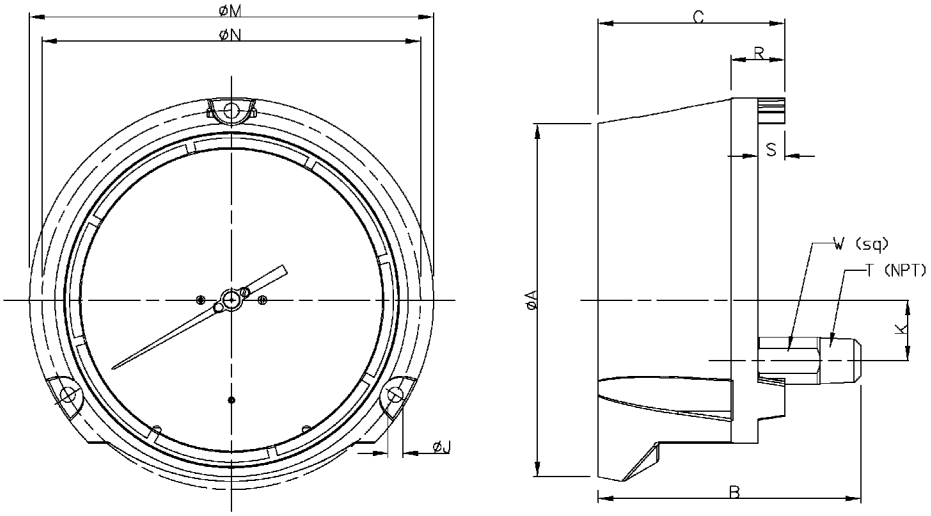

TYPE	SIZE	WEIGHT	KEY	A	B	C	J	K	M	N	R	S	T	W	
2XX.34 LBM	4.5"	2lbs.* (dry)	mm	128	120.3	84	6.3	28.5	148	136.5	25.1	12.5	--	22	
			inch	5	4.736	3.31	0.248	1.122	5.83	5.37	0.99	0.49	1/2"	0.87	* liquid filled 3lbs
	6"	3lbs.* (dry)	mm	164	0.191	88	7.1	28.5	190	177.8	25.4	12.7	--	22	
			inch	6.46	4.86	3.46	0.28	1.122	7.5	7	1	0.5	1/2"	0.87	* liquid filled 4lbs

**Technical Note: Maximum continous media tempertures of 212°F is recommended. Maximum temperatures shown are for intermittent, short term exposure. User should consider temperature error and gauge component degradation when exposing gauge to any media or ambient temperature above 140 °F. For continous use in either ambient or media temperatures above 140 °F, a diaphragm seal or other heat dissipating means is recommended. Consult factory for technical inquiries and application assistance.

Ordering Information:
State computer part number (if available) / type number / size / range / connection size and location / options required.

Specifications given in this price list represent the state of engineering at the time of printing. Modifications may take place and the specified materials may change without prior notice

06/02

WIKA Instrument Corporation
1000 Wiegand Boulevard
Lawrenceville, Georgia 30043-5868
Tel: 770-513-8200 Fax: 770-338-5118
http://www.wika.com e-mail: info@wika.com

CALGON CALGON CARBON CORPORATION	RUPTURE DISKS MATERIAL SPECIFICATION	SPEC NO:
	PSE-155 TO PSE-157;PSE-252;PSE-301 TO PSE-306;PSE-577;PSE-580	IS015

MATERIAL: Impervious graphite.

Type: Standard.
Vacuum Support: Furnish for disks with bursting pressure of 15 psig or less.

FLANGES: 150 # ANSI RF or FF companion flanges (furnished by others)

MANUFACTURER: Zook, or equal.

SIZES: As listed below:

ITEM NO.	SIZE	BURSTING PRESSURE
PSE-155	1"	75 PSIG +/- 5%
PSE-156	1-1/2"	75 PSIG +/- 5%
PSE-157	2"	75 PSIG +/- 5%
PSE-170	2"	125 PSIG +/- 5%
PSE-252	3"	75 PSIG +/- 5%
PSE-301	3"	35 PSIG +/- 5%
PSE-302	3"	50 PSIG +/- 5%
PSE-303	3"	65 PSIG +/- 5%
PSE-304	3"	87 PSIG +/- 5%
PSE-305	3"	150 PSIG +/- 5%
PSE-306	3"	75 PSIG +/- 5%
PSE-307	3"	100 PSIG +/- 5%
PSE-577	3"	125 PSIG +/- 5%
PSE-580	4"	125 PSIG +/- 5%

SPECIFICATIONS: ASME UD stamp required.

NOTES: As listed below:

1 - Tag with Item No. and Service.
2 - IS015 replaces Spec. No. 7209a-CS172

SERVICE CONDITIONS:
As listed below:

Fluid Under Disks:	Water
Pressure Fluctuation:	Back Pressure:
Temperature:	40 to 150 degrees F.
Operating Pressure:	80% of bursting pressure.
Back Pressure:	Atmospheric.

GENERAL REQUIREMENTS:
As listed Below:

Bursting Pressure:	See table above
Coincident Temperature:	150 degrees F.

Spec. IS015 Item PSE-577

CATALOG 77-8500 SECTION C

BS&B SAFETY SYSTEMS, L.L.C.
BS&B SAFETY SYSTEMS LTD

SAF-T-GRAF

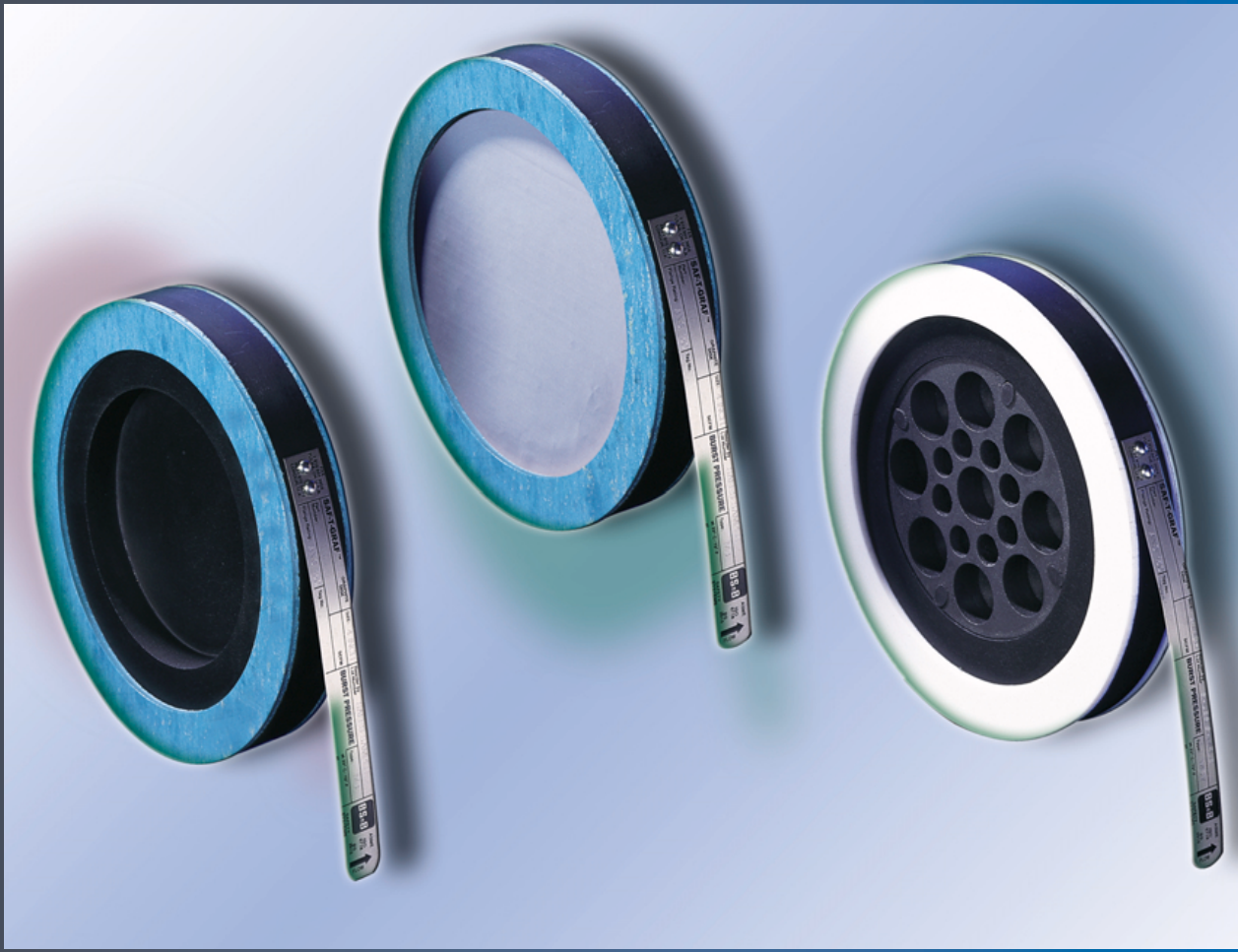

Saf-T-Graf graphite disks are impermeable to process gases and fluids

Spec. IS015 Item PSE-577

SAF-T-GRAF® System

SAF-T-GRAF® FEATURES

- Offers superior sealing characteristics to process gases and fluids
- Corrosion resistant (except free fluorine)
- Burst pressures from 0.02 bar (0.25 psig) to 69 bar (1000 psig)
- Higher operating temperature than other impregnated graphite disks up to 205°C (400°F)
- Full bore opening
- Sizes from 15 to 600 mm (0.5" to 24" and larger)
- Extended service life for operating pressures up to 80% of the disk marked pressure in a static environment - Lower operating ratios can be expected in a cyclic environment
- Suitable for gas service and liquid service
- Supplied with gaskets attached for immediate installation.
- Resists full vacuum (vacuum support required below 1.52 bar (22 psig) burst pressure)
- Optional PTFE coating to reduce product build-up
- Graphite impregnation is environmentally safe
- Patent pending
- ASME code, UD stamp above 15 psig (1.03barg) available

Armor

Armor is recommended for all graphite disks for added safety, easier installation and elimination of breakage during installation. Armor reduces the possibility of a premature burst due to uneven or excessive torqueing of the flange studs.

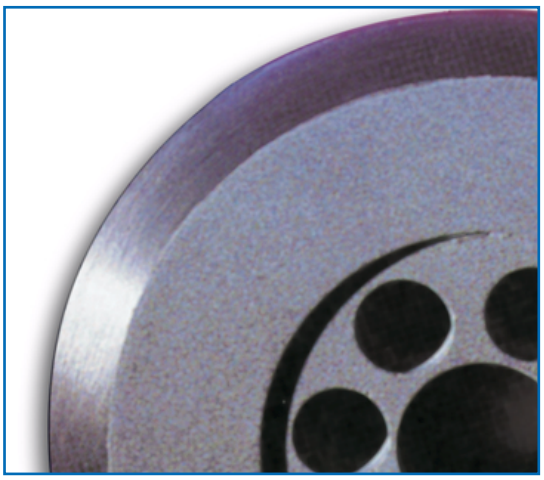

Armor is standard on disks with burst pressures in excess of 150 psig or to fit ANSI Class 300/600 flanges. Carbon steel armor is standard with 304/316 Stainless Steel as an option.

Saf-T-Graf monobloc impregnated graphite disks. Vacuum supports are designed utilizing the latest computer software to maximize venting capacities while maintaining structural strength. Armor ring around disk's circumference shown left.

Disks for Immediate Shipment

In order to provide the best possible service, BS&B stocks monobloc disks in the following sizes: 25, 40, 50, 80, 100, 150 and 200 mm (1", 1.5", 2", 3", 4", 6", 8").
Stocked Burst Pressures:
10-15-20-25-30-40-50-75-100-125-150 psig
All disks must be for 150 ANSI flange ratings.

Flange Ratings

Saf-T-Graf disks can be supplied to fit flange ratings ANSI, DIN, JIS, BS, AFNOR etc. Please specify flange rating when ordering

Gaskets

BS&B Safety Systems, L.L.C. stocks gaskets in the materials below:

- Garlock® or Klinger®-Sil (standard)

Optional Materials:

- GRAFOIL®
- Neoprene
- PTFE solid

Please specify your gasket material when ordering.

Sensors

A GAS™ (Graphite Alert Sensor) is available to provide warning of a burst graphite disk

Installations

The Saf-T-Graf disk is designed to permit direct installation between ANSI, DIN, JIS, BS, AFNOR pipe flanges and to locate between the flange bolts.

Operating Ratio

Up to 80% operating pressure to burst pressure ratio in a static environment. Lower operating ratios can be expected in a cyclic environment.

Klinger®-Sil is a registered trade mark of Klinger (Holdings) Ltd.
Garlock® is a registered trade mark of Coltec Industries
GRAFOIL® is a registered trade mark of UCAR Carbon Company, Inc.

Monobloc

Spec. IS015 Item PSE-577

Model MBV (with bar) and MB.

Model MB™

Monobloc disks fit most applications where a graphite disk is needed.

When using a monobloc disk in application:

- Vacuum supports are needed for disks rated below 1.52 bar (22 psig) and where a vacuum condition exists. Model MBVTM.
- Vacuum supports are not needed for sizes 15 and 20 mm (0.5", .75").
- Temperature ranges -730 C to 205ºC (-100ºF to 400ºF).
- Armoring is recommended for all graphite disks for added safety, easier installation and elimination of breakage during installation
- Armor reduces the possibility of a premature burst due to uneven or excessive torqueing of the flange studs

MB™ Specifications

Nominal Size		Burst Ratings Barg		Burst Ratings PSIG		Internal Diameter		Disk Thickness	
mm	in	Min	Max	Min	Max	mm	in	mm	in
15	0.5	1.73	10.3	25	150	15.9	0.625	16	0.625
20	0.75	1.73	10.3	25	150	21	0.825	16	0.625
25	1	0.69	10.3	10	150	27.2	1.07	22	0.875
40	1.5	0.49	10.3	7	150	41.1	1.62	22	0.875
50	2	0.14	10.3	2	150	52.6	2.07	22	0.875
80	3	0.069	10.3	1	150	78.0	3.07	22	0.875
100	4	0.069	10.3	1	150	103.4	4.07	22	0.875
150	6	0.069	10.3	1	150	154.2	6.07	22	0.875
200	8	0.035	10.3	0.5	150	205.0	8.07	29	1.125
250	10	0.0173	8.6	0.25	125	255.8	10.07	38	1.50
300	12	0.0173	8.6	0.25	125	306.6	12.07	51	2.00
350	14	0.0173	6.89	0.25	100	336.5	13.25	57	2.25
400	16	0.0173	6.89	0.25	100	387.4	15.25	64	2.50
450	18	0.0173	6.89	0.25	100	438.2	17.25	70	2.75
500	20	0.0173	3.4	0.25	50	489.0	19.25	76	3.00
600	24	0.0173	3.4	0.25	50	590.6	23.25	76	3.00

For other disk thickness, contact BS&B Safety Systems, L.L.C. or BS&B Safety Systems LTD.

MB

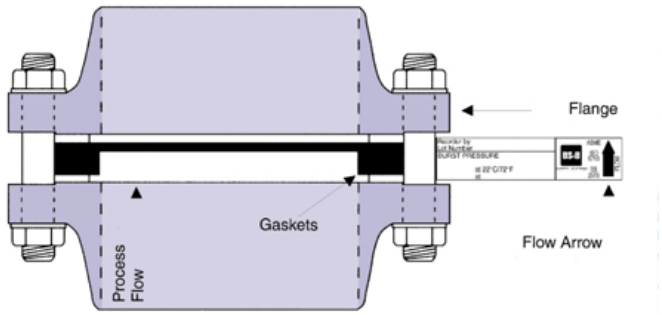

MB monobloc disks are available in size from 15mm to 600 mm (0.5" to 24") with a temperature range to 205º C (400ºF).

(For Venting Capacities Chart please refer to page 5.)

Burst Pressure - 125 psig

Optional Leak Detector (LD) for RDI Burst Sensor

For optional leak detection specify RDI-LD. The LD is a TFE seal affixed between two gaskets. When installed a build-up in pressure causes the RDI to open the electrical circuit.

Note: Max. Temperature of 500°F (260°C) *Limitation of liner material*

The LD is always installed on the pressure side of the RDI.

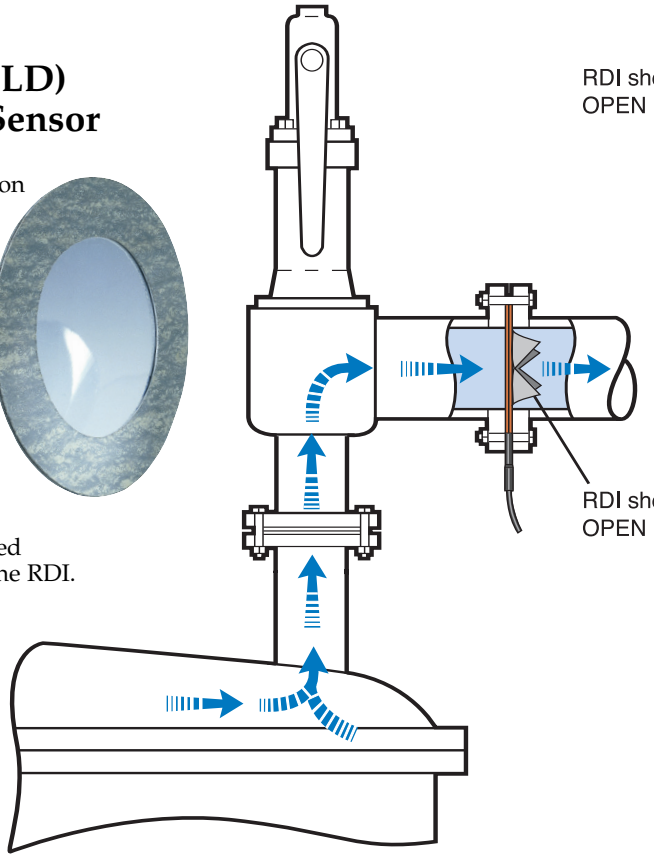

Relief Valve with RDI

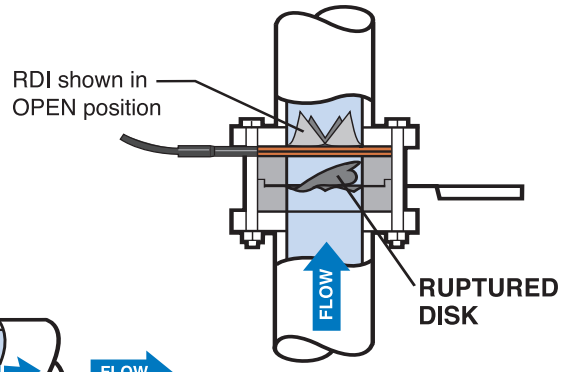

RDI installed with Metal Rupture Disk

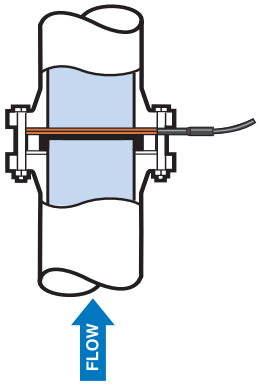

RDI installed with Graphite Rupture Disk

MONITOR

The RDI Rupture Disk Indicator works with ZOOK ZAM Plus Alarm Monitor or any other monitoring system. Contact ZOOK for additional information.

The monitor wired to the RDI will be activated providing immediate local or remote warning of a ruptured disk. The ZAM Plus monitor allows output to control pumps, valves, and other equipment which may be activated to control or shutdown a process.

CAUTION

The RDI is an electrical device suitable for use in hazardous locations (Class I, II, and III, Division 1 and 2, Group A thru G) provided that it is used with an approved intrinsically safe electrical alarm monitor.

For services involving highly electrically conductive fluids, contact ZOOK for this type of application.

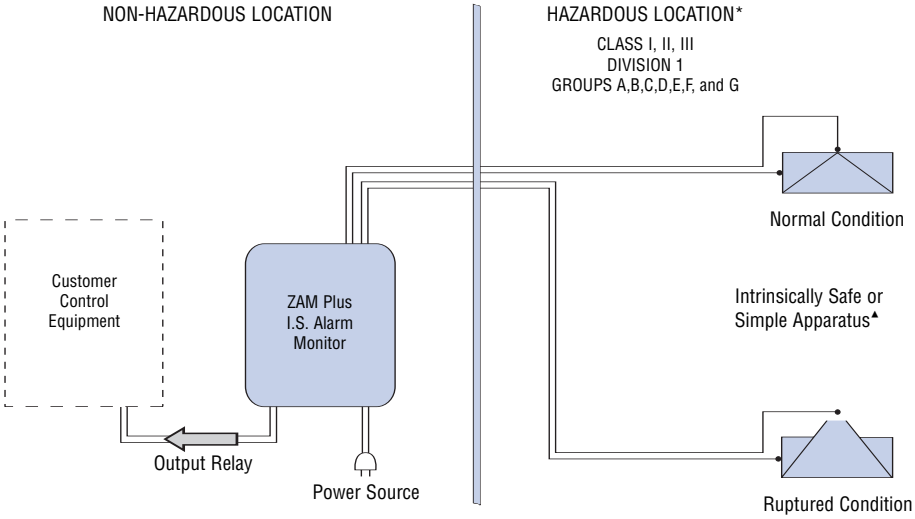

*Contact ZOOK for information about mounting the ZAM Plus Alarm Monitor in hazardous locations.

▲Hazardous location equipment must be NEC compliant or simple apparatus.

UD ASME COMPLIANT
CE PED COMPLIANT

ZOOK Enterprises, LLC
16809 Park Circle Drive
Chagrin Falls, OH 44022 U.S.A.
Toll Free **800.543.1043**
Phone **440.543.1010**
Fax **440.543.4930**
E-mail **sales@zook.cc**

ZOOK Canada, Inc.
4400 South Service Road
Burlington, ON Can. L7L 5R8
Toll Free **800.370.6057**
Phone **905.681.2885**
Fax **905.681.8838**
E-mail **sales.canada@zook.cc**

ZOOK Europe, LTD.
Unit 1.14, Great House Waterside Business Park
Redwall Close, Rotherham Road
Dinnington, Sheffield UK. S25 3QA
Phone **0044 (0) 1909 560999**
Fax **0044 (0) 1909 560860**
E-mail **zookeurope@zook.cc**

visit us on the web at www.zook.cc

BS&B®

BS&B SAFETY SYSTEMS, L.L.C.
BS&B SAFETY SYSTEMS LTD.

Burst Alert® Sensors

U.S. patents 4,978,947; 5,551,471 and other international patents apply.

For Immediate Warning of a Pressure Relief Event

Visit www.bsbsystems.com or www.bsb.ie for the most complete, up-to-date information.

Burst Alert® Sensors

Coincident Rupture Disk Burst Pressure for Burst Alert® Sensors

Table 1

Size of Rupture Disk		Minimum Coincident Pressure for BAS+ Series Sensors	
in	mm	psig	barg
1	25	14	0.96
$1^1/_2$	40	12	0.83
2	50	7	0.48
3	80	5	0.34
4	100	5	0.34
6	150	3	0.2
8	200	3	0.2
10	250	3	0.2
12	300	3	0.2

Table 2

Size of Rupture Disk		Minimum Coincident Pressure for KBA Series Sensors	
in	mm	in WC	millibar
1	25	N/A	N/A
$1^1/_2$	40	N/A	N/A
2	50	8.5/13.5	21/34
3	80	7.5/8.5	19/21
4	100	5.5/7.5	14/19
6	150	8.5/10.5	21/26
8	200	5.5/6.5	14/16

Note: The first pressure value applies to temperatures from -40°F-90°F (-40°C-32°C). The second pressure value applies from 90°F-175°F (32°C-79°C).

Table 3

Size of Rupture Disk		Maximum pressure activation for LDAS+ Series Sensors	
in	mm	psig	barg
1	25	N/A	N/A
$1^1/_2$	40	N/A	N/A
2	50	12	0.83
3	80	8.7	0.6
4	100	8.7	0.6
6+	150	8.7	0.6

Note: These pressure values indicate the maximum pressure buildup upstream of the sensor before activation to detect leakage and/or operation of a pressure relief device.

Table 4

Size of Rupture Disk		Minimum Coincident Pressure for BAS Series Sensors	
in	mm	psig	barg
1	25	20	1.38
$1^1/_2$	40	10	0.69
2	50	5	0.34
3	80	2.5	0.17
4	100	1.6	0.11
6+	150	1	0.069

Armored Version (ABAS+ shown)

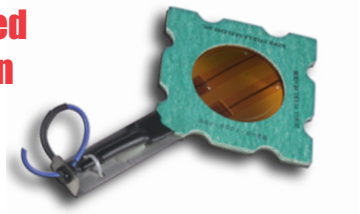

Sensor Type	Features
BAS+™ BASS+™ ***Armored:*** **ABAS+™ ABASS+™** 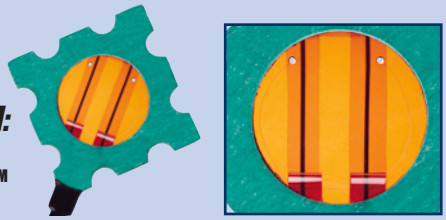 *Note: Two Reconnect Stops™ can be seen where the breaking ends of the Tantalum conductor wire run into the gasket (bottom of photo). The Stops provide electrical insulation that minimizes the risk of sensor reconnection after the pressure relief event. The wide conductor path separation further reduces the risk of electrical reconnection-there is insufficient live conductor material after perimeter opening of sensor to span the gap.*	• Superior perimeter fail • Polyimide film • Tantalum conductor wire • Dual path conductor • Reconnect Stops™ • Wide conductor separation
KBA™ KBAS™ ***Armored:*** **AKBA™ AKBAS™** 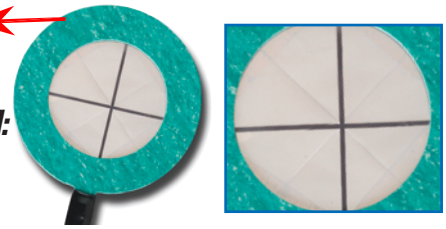	• Offset center fail • PTFE film • Tantalum conductor wire • Dual path conductor
KBA-S™ KBA-SS™ ***Armored:*** **Not Available** 	• Offset center fail • PTFE film • Tantalum conductor wire • Dual path conductor
DAS™ DASS™ ***Armored:*** **ADAS™ ADASS™** 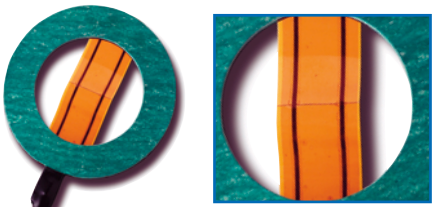	• Center fail • Polyimide film • Tantalum conductor wire • Dual path conductor • Domed to accommodate disk dome
LDAS+™ LDASS+™ ***Armored:*** **ALDAS™ ALDASS™** 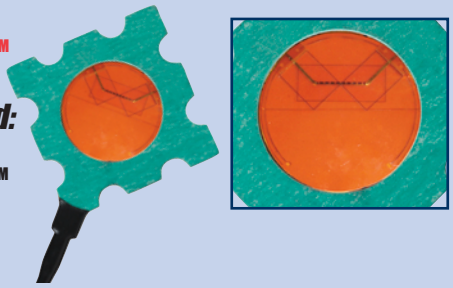 *The LDAS family of sensors detects both burst and leakage conditions.*	• Perimeter fail • Polyimide film • Tantalum conductor wire • Single path conductor • Dual failure point • Reconnect Stops™
BAS™ BASS™ ***Armored:*** **Not Available** 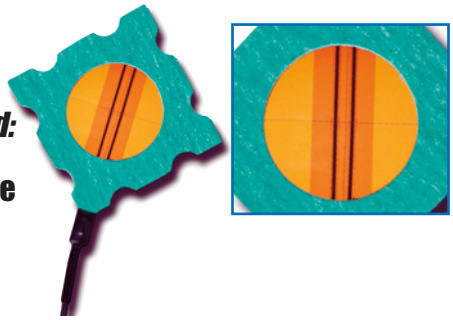	• Center fail • Polyimide film • Tantalum conductor wire • Dual path conductor

Note: Underlined sensor types are provided with SmartDisk™ compatible connectors. All other sensors are provided with pigtail end connections unless specified at the time of order.

Use with the following Rupture Disk type

Sure-Saf	CSI, CSR
Sta-Saf	Sigma EXL, Sigma, SK_R^+, LPS, RLS, S-90, JRS, FRS
High Pressure Eco-Saf	ECR, ECV, ECT, V/ECR (see Table 1)
Nu-Saf	XN-85, XN disks in safety head types NF-7RS and NF-7R only. Also type LCN at higher pressures (see Table 1), and XN-85S and XN disks sizes 1"~3"/25mm~80mm in safety head types NX-7R and NXV-7R.
High Pressure Graphite Disks	* MB, MBV, AMB, AMBV,IMB, AIMB, IMBL, AIMBL, RE, REV (see Table 1)
Other Disks	GFN, B, BV, D, DV, SVI, RB-90 – except for special reduced height safety heads that do not enclose the disk dome, when DAS family sensors should be used.

+ do not use BAS+ series sensor when installed in S90-7R safety head.
* when the sensor is installed on the atmospheric/ vent side of the rupture disk.

Vac-Saf	DKB, P/DKB, AVB (see Table 2)
Low Pressure Eco-Saf	(see Table 2)
Low Pressure Graphite Disks	(see Table 2)

Vac-Saf (sanitary/asceptic)	VKB, P/VKB, AVB-ST, P/AVB-ST (see Table 2)
Eco-Saf (sanitary/asceptic)	ECR-S, V/ECR-S, V/ECT-S (see Table 2)

Type GCR-S sanitary/aseptic rupture disks with integral burst alert sensors and type SAS Sanitary/Aseptic Burst Alert Sensors are detailed in catalogs 77-4014 and 77-4015.
Note: KBA-S family sensors use standard sanitary/aseptic gasket materials such as Viton, Silicone and EPDM.

Large Size Tension Loaded Disks	XN-85S and XN disks 4"/100mm and larger used in NX-7R or NXV-7R safety heads. B, BV, D, DV, XN-85 disks used in special reduced height safety heads that do not enclose the disk dome. Atmospheric vent type disks: AV, AVV, AVE, AVEL.

The response pressure capability of the DAS family of sensors matches the minimum burst pressure for the AV disk.

Sure-Saf	CSI, CSR
Sta-Saf	Sigma EXL, Sigma, SK_R^+, RLS, S-90 and high pressure LPS, JRS and FRS (see Table 3)
High Pressure Eco-Saf	ECR, ECV, ECT, V/ECR (see Table 3)
Nu-Saf	XN-85, XN disks in safety head types NF-7RS and NF-7R only. Also type LCN at higher pressures (see Table 3), and XN-85S and XN disks sizes 1"~3"/25mm~80mm in NX-7R and NXV-7R safety heads.
High Pressure Graphite Disks	* MB, MBV, AMB, AMBV,IMB, AIMB, IMBL, AIMBL, RE, REV (see Table 3)
Other Disks	GFN, B, BV, D, DV, SVI, RB-90 – except for special reduced height safety heads that do not enclose the disk dome.

+ do not use LDAS+ series sensor when installed in S90-7R safety head.
* when the sensor is installed on the atmospheric/vent side of the rupture disk.

Sure-Saf	CSI, CSR
Sta-Saf	Sigma EXL, SK_R^+, LPS, RLS, S-90, JRS, FRS
High Pressure Eco-Saf	ECR, ECV, ECT, V/ECR (see Table 4)
Nu-Saf	XN-85, XN disks in safety head types NF-7RS and NF-7R only. Also type LCN at higher pressures (see Table 1), and XN-85S and XN disks sizes 1"~3"/25mm~80mm.
High Pressure Graphite Disks	* MB, MBV, AMB, AMBV,IMB, AIMB, IMBL, AIMBL, RE, REV (see Table 4)
Other Disks	GFN, B, BV, D, DV, SVI, RB-90 – except for special reduced height safety heads that do not enclose the disk dome.

+ do not use BAS series sensor when installed in S90-7R safety head.
* when the sensor is installed on the atmospheric/ vent side of the rupture disk.

Burst Alert Sensor® Operation & Electrical Information

Each Burst Alert Sensor® is designed to operate in a "normally closed" electrical circuit. A polymer membrane is used to support an electrical conducting circuit. When the pressure event (disk rupture/valve opening) occurs, the flow of fluid places the polymer membrane in tension which leads to the break of a tantalum electrical conductor. This changes the electrical status of the sensor to "normally open." Recommended operating limits for Burst Alert Sensors are a maximum current of 500mA, maximum voltage 24 VDC; satisfactory operation can be obtained at a few milliamperes current.

Materials

Gaskets. Compressed fiber is the standard gasket material. Optional materials such as glass filled Tef, Garlock® 3000, and Tef are available upon request. The maximum service pressure for standard compressed fiber gaskets is 1450 psig (100 barg). (1000 psig/69 barg for Garlock 3000 and 800 psig/55 barg for Tef). Tef is limited to a maximum service temperature of 200ºF/93ºC.

Membrane. Each Burst Alert Sensor type uses a film of polymer material to support the electrical conductor and provide electrical insulation. Either Polyimide (yellow color in photographs) or PTFE (white color in photographs) is used for this purpose.

All Burst Alert Sensors use a flattened tantalum wire as the electrical conductor. This offers optimum corrosion resistance.

The user shall determine the compatibility of Burst Alert Sensor materials for each application.

Temperature Range

Burst Alert Sensors are suitable for a temperature range of:
-40ºF (-40ºC) to 500ºF (260ºC); 400ºF (204ºC) for the LDAS family
When supplied with standard cable, the cable temperature capability is:
-22ºF (-30ºC) to 221ºF (105ºC).
Optional high/low temperature cable permits use over the range from:
-85ºF (-65ºC) to 392ºF (200ºC).

Sensor Cable-Optional Features

Each Burst Alert Sensor is supplied with a 3 ft./1 m length of standard cable. The following options are available:

1. Standard cable, customer selected length.
2. High/low temperature, 3 ft./1 m length attached to sensor.
3. High/low temperature, customer selected length.
4. Wipe-down "clean service" two-part cable with molded water resistant connector; 3 ft. + 9 ft. (0.9 m + 2.7 m) standard package or cut smaller (purple color).
5. Extension cables available per ft./m (WSC connector required).
6. SmartDisk™ System Connector added to the normally free end of each sensor cable.

Size Availability

Standard BAS+, DAS and BAS family sensors are available up to size 12"/300 mm. Larger sizes are available upon request. The KBA and LDAS family sensors are available up to size 8"/200 mm.

Tagging and Packaging

Each Burst Alert Sensor is individually tagged and packaged. Burst Alert sensors are tagged indicating type, size, flange rating (where applicable), part number and traceable lot number.

Intrinsic Safety

Burst Alert Sensors are compatible with the requirements for operation of intrinsically safe electrical systems. All types of Burst Alert Sensor store no electrical energy; they are a "simple device" suitable for use in Classes I and II, Division I, Groups A through G provided that appropriate electrical apparatus is used (powered through a Zener Barrier).

Atex Compliance

Burst Alert Sensor types BAS+, ABAS+, LDAS+, DAS and ALDAS+ comply with the requirements of the European Union Atex directive. Special tagging is required and it is essential that the application service temperature is identified for each sensor order item. For further information, please consult the Burst Alert Sensor installation manual or BS&B Safety Systems.

Optional Armored Design

Sensor families BAS+, KBA, DAS and LDAS+ are available in optional armored configuration. The sensor is mounted to a stainless steel support concealed within the gaskets. This greatly increases the rigidity of the sensor for handling and installation. In addition, armored sensors have a perimeter extension tab to which the cable is tied. This isolates the "cable to sensor" connection avoiding damage should the cable be pulled hard or blown in the wind for an extended period.

Optional Connector

Each Burst Alert Sensor can be supplied with an optional weatherproof connector. The standard connector option is type WSC.
The characteristics of the type WSC connector are:

- Durable threaded internal pin connections (3 pin-positive/negative/shielding)
- Durable Nylon housing, threaded assembly of housing with Nitrile O-ring seals
- 10 Amps, 250 V AC
- UL listed IP 68, EN 60529:1992 conformance.
- Cable Gland suitable for cable diameters from 3.5~5 mm
- Operating Temperature range -4ºF (-20ºC) to 158ºF (70ºC)

Alternative connectors available upon request.

Cautions:

1. The user is recommended to operate Burst Alert Sensors with a latching control and alarm system.
2. Caution when using Burst Alert Sensor technology with conducting fluids. Even though the electrical conductor path is broken, conducting liquids may enable a new electrical circuit to be completed.
3. In the event of back pressure, the operation of a Burst Alert Sensor may be influenced. Seek the advice of BS&B Safety Systems, L.L.C. or BS&B Safety Systems, Ltd.
4. When using the LDAS+ family of sensors, the user must consider the impact that accumulation of pressure upstream of the sensor will have on the set pressure of differential pressure sensitive relief devices located further upstream.

BS&B SAFETY SYSTEMS, L.L.C.
BS&B SAFETY SYSTEMS LTD.

BS&B SAFETY SYSTEMS, L.L.C.
7455 East 46th Street, Tulsa, OK 74145, USA
Tel: (918) 622-5950 Fax: (918) 665-3904
Toll Free: 1-800-BSB-DISK
E-mail: mktg@tul.bsbsystems.com
www.bsbsystems.com

BS&B SAFETY SYSTEMS LTD.
Bay G-1, Raheen Business Park, Limerick, Ireland
Tel: +353 61 227022. Fax: +353 61 227987
E-mail: sales@bsb.ie
www.bsb.ie

BS&B SAFETY SYSTEMS (UK) LTD.
Adamson House, Towers Business Park,
Wilmslow Road, Manchester M20 2YY, England
Tel: +44 161-955 4202. Fax :+44 161-955 4282
E-mail: sales@bsb-systems.co.uk

Products, specifications and all data in this literature are subject to change without notice. Questions regarding product selection and specifications for specific applications should be directed to BS&B Safety Systems, L.L.C. or BS&B Safety Systems Ltd. All sales are subject to BS&B Safety Systems, L.L.C. or BS&B Safety Systems Ltd. standard terms and conditions of sale. Nothing herein should be construed as a warranty of merchantability or fitness for a particular purpose.

Burst Alert is a registered trademark of BS&B Safety Systems Ltd.
Teflon is a E.I. DuPont de Nemours & Co., Inc. trademark.
Garlock is a registered trademark of Garlock Corporation.
© 2002 BS&B Safety Systems, Ltd.

Printed Sept. 2002

Magnetoflow® Mag Meter	Model Magnetoflow Flanged	Technical Brief

GENERAL

Badger's Magnetoflow line is the result of 35 years of research and field use in electromagnetic flow meters. Based on Faraday's law of induction, these meters can measure almost any liquid, slurry or paste that has a minimum of electrical conductivity. Designed, developed and manufactured under the strictest quality standards, the Magnetoflow meter ranks among the best in the market. Its sophisticated, processor based signal conversion represents the state of the art in the industry with accuracies of 0.25% or better. The wide selection of liner and electrode materials insures maximum compatibility and minimum maintenance over a long operating period.

OPERATION

The flow meter is basically a stainless steel tube lined with a nonconductive material. Outside the tube two DC powered electromagnetic coils are positioned diametrically opposing each other. Perpendicular to these coils, two electrodes are inserted into the flow tube. When the coils are energized, a magnetic field is created across the whole diameter of the pipe. When a conductive fluid flows through this magnetic field, a voltage is induced across the electrodes. This voltage is directly proportional to the average flow velocity of the fluid and is picked up by the two electrodes. This induced voltage is then amplified and processed digitally by the converter to produce a very accurate analog or digital signal. The signal can then be used to indicate flow rate, totalization or to communicate to remote sensors and controllers. The main advantages of this technology are that with no parts in the flow stream, there is no pressure loss, the accuracy is not affected by temperature, pressure, viscosity, density or flow profile and with no moving parts there is practically no maintenance required.

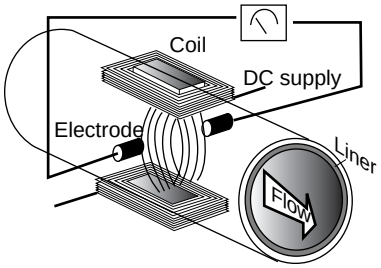

APPLICATION

Because of its inherent advantages over other more conventional technologies, this meter can be used in the majority of industrial flow applications. Whether the fluid is water or something highly corrosive, very viscous, contains a moderate amount of solids or requires special handling, this meter will be able to accurately measure it. Today Magnetoflow meters are successfully being used in most industries including food and beverage, pharmaceutical, water and wastewater, and chemical.

Magnetoflow® Flanged

FEATURES

- 0.25% accuracy independent of fluid viscosity, density and temperature
- Unaffected by most solids contained in fluids
- Pulsed DC magnetic field for zero point stability
- No pressure loss for low operational costs
- Long life corrosion resistant liners
- Calibrated in state of the art facilities
- Integral and remote signal converter availability
- Optional grounding rings or grounding electrode
- Measurement largely independent of flow profile
- NSF listed

Electrodes

The two measuring electrodes, when looking from the end of the meter into the inside bore, are positioned at 3 o'clock and 9 o'clock. Badger Meter's Magnetoflow Mag meters have an "Empty Pipe Detection" feature. This is accomplished by the use of a third electrode that is positioned between 12 o'clock and 1 o'clock in the meter. At any time this electrode is not covered by fluid, (for a minimum of a five second duration), the meter will display an Empty Pipe Detection condition, send out an error message if desired, and stop measuring to maintain accuracy. When the electrode again becomes covered with fluid, the error message will disappear and the meter will continue measuring.

As an option to the use of a set of grounding rings, to assure proper grounding in a given installation a grounding electrode (4th electrode) can be installed in the meter when initially fabricated. The position of this electrode is about 5 o'clock.

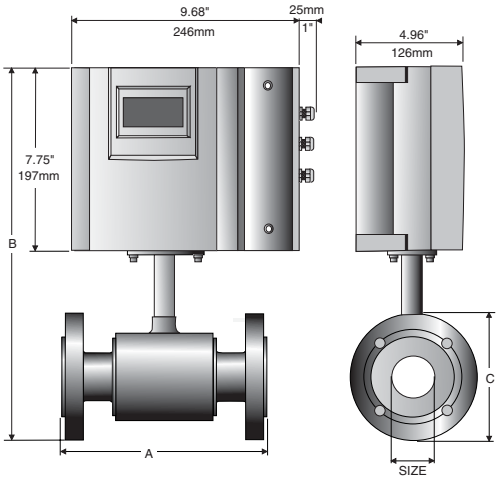

Meter with Primo® Amplifier

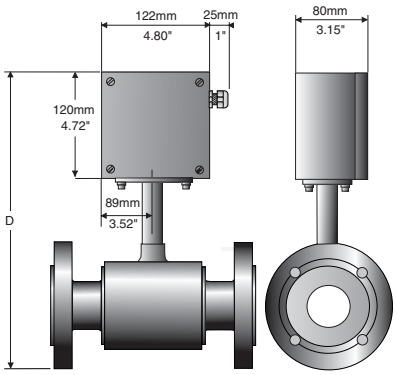

Meter with junction box for remote Primo® Amplifier

Size		A		B		C		D		Est. Weight with Primo		Flow Range LPM		Flow Range GPM	
inch	mm	inch	mm	inch	mm	inch	mm	inch	mm	Lbs	Kg	Min	Max	Min	Max
1/4	6	6.7	170	14.0	356	3.5	89	11.4	288	12	5.5	0.063	20	0.02	5
5/16	8	6.7	170	14.0	356	3.5	89	11.4	288	12	5.5	0.114	34	0.03	9
3/8	10	6.7	170	14.0	356	3.5	89	11.4	288	12	5.5	0.177	53	0.05	14
1/2	15	6.7	170	14.0	356	3.5	89	11.4	288	12	5.5	0.416	125	0.11	33
3/4	20	6.7	170	14.2	361	3.9	99	11.5	293	15	6.5	0.75	225	0.2	59
1	25	8.9	225	14.4	366	4.3	108	11.7	298	20	9.0	1.20	350	0.3	93
1 1/4	32	8.9	225	15.2	386	4.6	117	12.5	318	22	10.0	2.00	575	0.5	152
1 1/2	40	8.9	225	15.4	390	5.0	127	12.7	322	23	10.5	3.00	900	0.8	239
2	50	8.9	225	15.9	403	6.0	152	13.2	335	28	12.5	4.70	1400	1	373
2 1/2	65	11.0	280	17.1	434	7.0	178	14.4	366	54	24.5	8	2400	2	631
3	80	11.0	280	17.3	440	7.5	191	14.7	372	56	25.5	12	3600	3	956
4	100	11.0	280	18.4	466	9.0	229	15.7	398	58	26.5	19	5600	5	1493
5	125	15.8	400	19.6	498	10.0	254	16.9	430	60	27.0	30	8800	8	2334
6	150	15.8	400	20.6	524	11.0	279	17.9	456	62	28.0	40	12700	11	3361
8	200	15.8	400	22.5	572	13.5	343	20.4	518	88	40.0	75	22600	20	5975
10	250	19.7	500	26.8	681	16.0	406	24.1	613	180	82.0	120	35300	30	9336
12	300	19.7	500	28.9	734	19.0	483	26.2	666	209	95.0	170	50800	45	13444
14	350	23.6	590	30.8	782	21.0	533	28.2	716	260	118	230	69200	60	18299
16	400	23.6	590	33.7	856	23.5	597	31.0	788	308	140	300	90400	80	23901
18	450	23.6	590	35.0	890	25.0	635	32.4	822	402	182	380	114000	100	30250
20	500	23.6	590	38.2	969	27.5	699	35.5	901	495	225	470	140000	125	37346
22	550	23.6	590	39.6	1005	29.5	749	36.9	937	525	238	570	170000	150	45188
24	600	23.6	590	42.2	1071	32.0	813	39.5	1003	554	252	680	200000	180	53778
28	700	23.6	590	46.2	1173	36.5	927	44.0	1118	650	295	920	275000	240	73100
30	750	31.5	800	48.3	1228	39.0	984	45.7	1161	704	320	1060	315000	280	84000
32	800	31.5	800	52.2	1325	41.4	1015	49.5	1257	770	350	1200	361000	320	95600
36	900	31.5	800	55.3	1405	46.0	1168	54.1	1374	850	386	1500	457000	400	121000
40	1000	31.5	800	60.0	1525	50.2	1230	57.4	1457	924	420	1900	565000	500	149300
42	1050	36.0	914	66.0	1675	53.0	1346	63.4	1610	1100	500	2100	620000	550	164600
48	1200	39.4	1000	69.9	1775	59.4	1455	67.2	1707	1210	550	2700	814000	720	215100
54	1400	39.4	1000	78.5	1995	68.4	1675	75.9	1927	1364	620	3700	1100000	980	292700

SPECIFICATIONS - Detector

Flow Range: 0.1 - 39.4 fps (0.03-12 m/s)
Sizes: 1/4" to 54" (16 to 1400 mm)
Min. Conductivity: ≥ 5 micromhos/cm
Accuracy:
± 0.25% accuracy of rate from 1-39.4 fps.
± 0.5% accuracy of rate from 0.1-1.0 fps.
Electrode Materials: Standard: Alloy C
Optional: 316 Stainless Steel, Gold/Platinum Plated, Tantalum, Platinum/Rhodium
Liner Material: PFA up to 3/8", PTFE 1/2" thru 24", Soft and Hard Rubber from 1" to 54", Halar® from 14" to 40"
NSF Listed: Models with Hard Rubber Liner 4" size and up; PTFE Liner - All sizes.

"Only products bearing the NSF Mark are Certified."

Fluid Temperature:
With Remote Converter:
PFA, PTFE & Halar 311°F, (155°C)
Rubber 178°F, (80°C)
With Meter Mounted Converter:
PFA, PTFE & Halar 212°F, (100°C)
Rubber 178°F, (80°C)
Pressure Limits:
150 psi (10Bar) optional 300psi (20Bar)
Coil Power: Pulsed DC
Ambient Temperature: -4°F to 140°F, (-20°C to 60°C)
Pipe Spool Material: 316 Stainless Steel
Meter Housing Material: Carbon Steel welded

Flanges: Carbon Steel - Standard (ANSI B16.5 Class 150 RF) 316 Stainless Steel - Optional
Meter Enclosure Classification: Nema 4
Optional: Submersible Nema 6P (Remote Amplifier Required)
Junction Box Enclosure Protection:
(For Remote Converter Option) Powder coated die-cast aluminum, Nema 4
Cable Entries: 1/2" NPT Cord Grip
Optional Stainless Steel Grounding Rings:

Meter Size	Thickness (of one ring)
up thru 10"	.135"
12" to 20"	.187"

Magnetoflow® and Primo® are registered trademarks of Badger Meter, Inc. Halar® is a registered trademark of Ausimont U.S.A., Inc.

Due to continuous research, product improvements and enhancements, Badger Meter reserves the right to change product or system specifications without notice, except to the extent an outstanding bid obligation exists.

Please see our website at
www.badgermeter.com
for specific contacts.

BadgerMeter,Inc.
P.O. Box 245036, Milwaukee, WI 53224-9536
Telephone: (414) 355-0400 / (877) 243-1010
Fax: (414) 355-7499 / (866) 613-9305
www.badgermeter.com

Copyright © Badger Meter, Inc. 2003. All rights reserved.

Rosemount 1151 Pressure Transmitter

- *Proven field performance and reliability*
- *Commitment to continuous improvement*
- *Application flexibility*

Content

Specifications . . . . . page 3
Product Certifications . . . . . page 7
Dimensional Drawings. . . . . page 9
Ordering Information . . . . . page 15

CE

ROSEMOUNT®

www.rosemount.com

EMERSON™
Process Management

Leading a tradition of excellence

With over five million transmitters installed worldwide, the 1151 continues to offer industry leading value. Changing customer needs have driven product improvements, while advanced manufacturing and testing processes have guaranteed product quality. Even today, the 1151 is world-renowned for proven field reliability and longevity.

Proven field performance and reliability

For over 30 years, the 1151 has provided the process control industry with unsurpassed service and reliability in even the harshest of environments. The lasting customer preference results from a combination of advanced technology, and a heritage of field proven performance.

Commitment to continuous improvement

Smart electronics increased rangeability to 40:1, reducing the number of transmitters to specify, procure and carry in inventory. In addition, ± 0.1% accuracy has been achieved through product improvements, meeting ever increasing pressure measurement requirements. A modular design allows interchangeable mechanical and electrical components, providing backward and forward compatibility.

Application flexibility

The 1151 offers a variety of configurations for differential, gage, absolute and liquid- level measurements. A high pressure models allows static line pressures up to 4500 psi (310 bar). Multiple wetted materials, as well as alternative fill fluids ensure process compatibility. Smart, analog and low-power electronics are available to meet specific application requirements.

Rosemount Pressure Solutions

Rosemount 3051S Series of Instrumentation
Scalable pressure, flow and level measurement solutions improve installation and maintenance practices.

Rosemount 3095MV Mass Flow Transmitter
Accurately measures differential pressure, static pressure and process temperature to dynamically calculate fully compensated mass flow.

Rosemount 305 and 306 Integral Manifolds
Factory-assembled, calibrated and seal-tested manifolds reduce on-site installation costs.

Rosemount 1199 Diaphragm Seals
Provides reliable, remote measurements of process pressure and protects the transmitter from hot, corrosive, or viscous fluids.

Orifice Plate Primary Element Systems: Rosemount 1495 and 1595 Orifice Plates, 1496 Flange Unions and 1497 Meter Sections
A comprehensive offering of orifice plates, flange unions and meter sections that is easy to specify and order. The 1595 Conditioning Orifice provides superior performance in tight fit applications.

Annubar Flowmeter Series: Rosemount 3051SFA, 3095MFA, and 485
The state-of-the-art, fifth generation Rosemount 485 Annubar combined with the 3051S or 3095MV MultiVariable transmitter creates an accurate, repeatable and dependable insertion-type flowmeter.

Compact Orifice Flowmeter Series: Rosemount 3051SFC, 3095MFC, and 405
Compact Orifice Flowmeters can be installed between existing flanges, up to a Class 600 (PN100) rating. In tight fit applications, a conditioning orifice plate version is available, requiring only two diameters of straight run upstream.

ProPlate Flowmeter Series: Rosemount ProPlate, Mass ProPlate, and 1195
These integral orifice flowmeters eliminate the inaccuracies that become more pronounced in small orifice line installations. The completely assembled, ready to install flowmeters reduce cost and simplify installation.

Specifications

FUNCTIONAL SPECIFICATIONS

Service

Liquid, gas, and vapor applications

Ranges

See Table 2 for ranges. Minimum span equals the upper range limit (URL) divided by rangedown. Rangedown varies with the output code See Table 1.

Outputs

Code S, Smart

4–20 mA dc, user selectable for linear or square root output. Digital process variable superimposed on 4–20 mA signal, available to any host that conforms to the HART® protocol.

Code E, Analog

4–20 mA dc, linear with process pressure

Code G, Analog

10–50 mA dc, linear with process pressure

Code J, Analog

4–20 mA dc, square root of differential input pressure between 4 and 100% of input. Linear with differential input pressure between 0 and 4% of input.

Code L, Low Power

0.8 to 3.2 V dc, linear with process pressure

Code M, Low Power

1 to 5 V dc, linear with process pressure

Current Consumption Under Normal Operating Conditions (Low Power Only)

Output Code L

1.5 mA dc

Output Code M

2.0 mA dc

Zero Elevation and Suppression

Output Codes S, E, and G

Zero elevation and suppression must be such that the lower range value is greater than or equal to the (–URL) and the upper range value is less than or equal to the (+URL). The calibrated span must be greater than or equal to the minimum span and less than or equal to the maximum span.

Output Code J

Zero is adjustable up to 10% of the calibrated flow span.

Output Code L

Zero is adjustable ±10% of URL and span is adjustable from 90 to 100% of URL.

Output Code M

Zero is adjustable ±50% of URL and span is adjustable from 50 to 100% of URL.

Span and Zero

Output Code S

Span and zero may be accessed with local adjustments or remotely through a HART-compatible Interface.

Output Codes E, G, J, L, and M

Span and zero are continuously adjustable.

Power Supply

External power supply required. Transmitter operates according to the following requirements:

Output Codes S, E, J

12 to 45 V dc with no load

Output Code G

30 to 85 V dc with no load

Output Code L

5 to 12 V dc

Output Code M

8 to 14 V dc

Where:

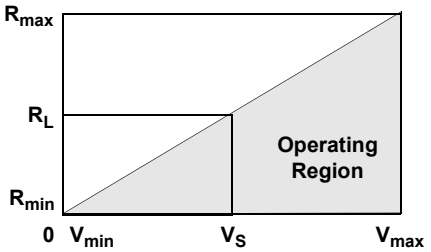

Code	V_{min}	V_{max}	R_{min}	R_{max}	R_L at Supply Voltage (V_S)
S(1)	12	45	0	1650	$R_L = 43.5 (V_S – 12)$
E(2), J	12	45	0	1650	$R_L = 50 (V_S – 12)$
G	30	85	0	1100	$R_L = 20 (V_S – 30)$
L	5	12	Low Power Minimum Load Impedance: 100 kΩ		
M	8	14			

(1) A minimum of 250 ohms is required for communication.

(2) For CSA approvals V_{max} = 42.4 V dc.

Temperature Limits

Electronics Operating

Code S: –40 to 185 °F (–40 to 85 °C)

Code E: –40 to 200 °F (–40 to 93 °C)

Code G, L, M: –20 to 200 °F (–29 to 93 °C)

Code J: –20 to 150 °F (–29 to 66 °C)

Sensing Element Operating

Silicone fill: –40 to 220 °F (–40 to 104 °C)

Inert fill: 0 to 160 °F (–18 to 71 °C)

Storage

Code S: –60 to 185 °F (–51 to 85 °C)

Codes E, G, L, M: –60 to 250 °F (–51 to 121 °C)

Code J: –60 to 180 °F (–51 to 82 °C)

TABLE 1. Rangeability

Output Code	Minimum Span	Maximum Span
S (DP and GP, SST, Range 3–8; HP SST, Range 4–7)	URL/40	2 × URL(1)
S (All Others)	URL/40(2)	2 × URL(1)
E, G, J	URL/6	URL
L	URL/1.1	URL
M	URL/2	URL

(1) Transmitter is capable of measuring from –URL to URL.

(2) Accuracy specification for calibrated spans from 1:1 to 6:1 of URL only.

TABLE 2. Transmitter Range Availability by Model (URL = Upper Range Limit)

Range Code	Model 1151 Ranges (URL)	DP	HP	GP	DP/GP/Seals	AP	LT
3	30 inH_20 (7.46 kPa)	•	NA	•	NA	NA	NA
4	150 inH_20 (31.08 kPa)	•	•	•	•	•	•
5	750 inH_20 (186.4 kPa)	•	•	•	•	•	•
6	100 psi (689.5 kPa)	•	•	•	•	•	•
7	300 psi (2,068 kPa)	•	•	•	•	•	NA
8	1,000 psi (6,895 kPa)	•	NA	•	NA	•	NA
9	3,000 psi (20,684 kPa)	NA	NA	•	NA	NA	NA
0	6,000 psi (41,369 kPa)	NA	NA	•	NA	NA	NA

TABLE 3. Upper Range Limits (URL)

Range Code	bar	mbar	kg/cm^2	psi	kPa	inH_20 @20 °C	mmH_2O @20 °C	inHg @0 °C
3	0.075	75	0.076	1.082	7.461	30	762	2.203
4	0.373	373	0.380	5.409	37.305	150	3810	11.013
5	1.865	1865	1.901	27.045	186.505	750	19050	55.065
6	6.90	6895	7.031	100	690	2773	70434	204
7	21	20685	21	300	2069	8319	211302	611
8	69	68950	70	1000	6895	27730	704340	2036
9	207	206850	211	3000	20685	83190	2113020	6108
0	413.686	413686	421.842	6000	41369	166378	4225992	12216.12

TABLE 4. Output Code Availability

Code	Model 1151 Output Options/Damping	DP	HP	GP	DP/GP/Seals	AP	LT
S	4–20 mA, Digital, Smart/Variable	•	•	•	•	•	•
E	4–20 mA, Linear, Analog/Variable	•	•	•	•	•	•
G	10–50 mA, Linear, Analog/Variable	•	•	•	•	•	•
J(1)	4–20 mA, Square Root, Analog/Variable	•	•	NA	NA	NA	NA
L	0.8 to 3.2 V, Linear, Low Power/Fixed	•	•	•	•	•	NA
M	1 to 5 V, Linear, Low Power/Fixed	•	•	•	•	•	NA

(1) Available with Ranges 3–5.

TABLE 5. Fill Fluid Specifications

Fill Fluid	Temperature Limits(1)	Specific Gravity	Coeff. of Therm. Exp. cc/cc/°F (cc/cc/°C)	Viscosity at 25 °C centistokes
D.C.® 200 Silicone	–40 to 400 °F (–40 to 205 °C)	0.934	0.00060 (0.00108)	9.5
D.C. 704 Silicone	60 to 400 °F (15 to 204 °C)	1.07	0.00053 (0.00095)	44
Inert Fill	–50 to 350 °F (–45 to 177 °C)	1.85	0.0004 (0.000864)	6.5
Syltherm®XLT, Silicone	–100 to 300 °F (–73 to 149 °C)	0.85	0.000666 (0.001199)	1.6
Glycerin and Water(2)	0 to 200 °F (–17 to 93 °C)	1.13	0.00019 (0.00034)	12.5
Propylene Glycol and Water(3)	0 to 200 °F (–17 to 93 °C)	1.02	0.00019 (0.00034)	2.85
Neobee M-20®(3)	0 to 400 °F (–17 to 205 °C)	0.900	0.00056 (0.001008)	9.8

(1) Temperature limits are reduced in vacuum service. Contact your local Rosemount representative for assistance.

(2) Glycerin and Water and Propylene Glycol and Water are not suitable for vacuum service.

(3) Not compatible with Buna-N or Ethylene-Propylene O-ring material.

Static Pressure and Overpressure Limits

Model 1151DP

0 psia to 2,000 psig (0 to 13.79 MPa) on either side without damage to transmitter. Operates within specifications from static line pressures of 0.5 psia (3.45 kPa) to 2,000 psig (13.79 MPa).

Model 1151HP

0 psia to 4,500 psig (0 to 31.02 MPa) on either side without damage to transmitter. Operates within specifications from 0.5 psia (3.45 kPa) to 4,500 psig (31.02 MPa).

Model 1151AP

0 psia to 2,000 psia (0 to 13.79 MPa) without damage to transmitter. Operates within specifications from 0 psia to the upper range limit of the transmitter.

Model 1151GP

0 psia to 2,000 psig (0 to 13.79 MPa) for ranges to 1,000 psig (6.90 MPa), 4,500 psig (31.02 MPa) for the 3,000 psig (20.68 MPa) range, and 7,500 psig (51.71 MPa) for the 6,000 psig (41.37 MPa) range, without damage to the transmitter. Operates within specifications from 0.5 psia (3.45 kPa) to the upper range limit of the transmitter.

Model 1151LT

TABLE 6. Flange Pressure Rating

Standard	Class/Rating	Carbon Steel	Stainless Steel
ANSI	150	285 psig(1)	275 psig(1)
ANSI	300	740 psig(1)	720 psig(1)
ANSI	600	1,480 psig(1)	1,440 psig(1)
DIN	PN 10–40	40 bar(2)	40 bar(2)
DIN	PN 10/16	16 bar(2)	16 bar(2)
DIN	PN 25/40	40 bar(2)	40 bar(2)

(1) At 100 °F (38 °C); the rating decreases with increasing temperature.

(2) At 248 °F (120 °C); the rating decreases with increasing temperature.

Burst Pressure All Models

10,000 psig (68.95 MPa) proof pressure on the flanges.

Humidity Limits

0 to 100% relative humidity

Volumetric Displacement

Less than 0.01 in^3 (0.16 cm^3)

Failure Mode Alarm (Output Code S)

If self-diagnosis detects a gross transmitter failure, the analog signal will be driven below 3.9 mA or above 21 mA to alert the user. High or low alarm signal is user selectable.

Level	4–20 mA Saturation Value	4–20 mA Alarm Value
Low	3.9 mA	3.8 mA
High	20.8 mA	21.75 mA

Transmitter Security (Output Code S)

Activating the transmitter security function prevents changes to the transmitter configuration, including local zero and span adjustments. Security is activated by an internal switch.

Overpressure Alarm (Output Code S)

If the sensor detects a negative overpressure value, the analog signal will be driven to 3.9 mA. If the sensor detects a positive overpressure value, the analog signal is driven to 20.8 mA.

Damping

Numbers given are for silicone fill fluid at room temperature. The minimum time constant is 0.2 seconds (0.4 seconds for Range 3). Inert-filled sensor values would be slightly higher.

Output Code S

Time constant is adjustable in 0.1 second increments from minimum to 16.0 seconds.

Output Codes E and G

Time constant continuously adjustable between minimum and 1.67 seconds.

Output Code J

Time constant continuously adjustable between minimum and 1.0 second.

Output Codes L, M

Damping is fixed at minimum time constant.

Model 1151LT

Time constant continuously adjustable between 0.4 and 2.2 seconds with silicone oil fill, or 1.1 and 2.7 seconds with inert fill for flush models and electronics codes E or G.

Turn-on Time

Maximum of 2.0 seconds with minimum damping. Low power output is within 0.2% of steady state value within 200 ms after application of power.

PERFORMANCE SPECIFICATIONS

(Zero-based calibrated ranges, reference conditions, silicone oil fill, 316 SST isolating diaphragms.)

Accuracy

Output Code S

Ranges 3 through 8, DP and GP transmitters;
Ranges 4 through 7, HP transmitters

±0.1 of calibrated span for spans from 1:1 to 10:1 of URL. Between 10:1 and 40:1 of URL.

$$\text{accuracy} = \pm\left[0.02\left(\frac{\text{URL}}{span}\right) - 0.1\right]\% \text{ of calibrated span}$$

All other ranges and transmitters

±0.25% of calibrated span(1)

Output Code S, square root mode

$$\pm\left[0.2 + 0.05x\left(\frac{\text{URL}}{\text{span}}\right)\right]\% \text{ of calibrated flow span}$$

Output Codes E, G, L, and M

±0.2% of calibrated span for Model 1151DP Ranges 3 through 5. All other ranges and transmitters, ±0.25% of calibrated span.

Output Code J

±0.25% of calibrated span

(1) Accuracy for Range 9, GP transmitter at 40:1 is ±0.7% of calibrated span.

Stability

Output Code S

±0.1% of URL for six months for DP and GP Ranges 3 through 8. (±0.25% for all other ranges and transmitters.)

Output Codes E and G

±0.2% of URL for six months for Ranges 3 through 5. (±0.25 for all other ranges.)

Output Codes J, L, and M

±0.25% of URL for six months

Temperature Effect

Output Code S [–20 to 185 °F (–29 to 85 °C)]

For DP and GP transmitter Range 4 through 8;
HP transmitter Range 4 through 7:

Zero Error = ±0.2% URL per 100 °F (56 °C)
Total Error = ±(0.2% URL + 0.18% of calibrated span) per 100 °F; For Range 3, double the stated effects. For other ranges and transmitters follow analog temperature specifications (Output Code E).

Output Code E, G, L, and M

[–20 to 200 °F (–29 to 93 °C)]
For Ranges 4 through 0

Zero Error = ±0.5% URL per 100 °F.
Total Error = ±(0.5% URL + 0.5% of calibrated span) per 100 °F; double the effect for Range 3.

Output Code J

The total output effect, whether at zero or full scale, including zero and span errors is ±1.5% of URL per 100 °F (56 °C). ±2.5% of URL per 100 °F (56 °C) for Range 3.

Static Pressure Effect – DP Transmitters

DP Transmitters

Zero Error

±0.25% of URL for 2,000 psi (13790 kPa) for Range 4 and 5 or ±0.5% for other ranges, correctable through rezeroing at line pressure.

Span Error

Correctable to ±0.25% of input reading per 1,000 psi (6895 kPa), or to ±0.5% for Range 3. For Output Code J, the span error is correctable to ±0.125% of output reading per 1,000 psi, or to ±0.25% for Range 3.

HP Transmitters

Zero Error

±2.0% of URL for 4,500 psi (31027 kPa), correctable through rezeroing at line pressure.

Span Error

Correctable to ±0.25% of input reading per 1,000 psi (6895 kPa).
For Output Code J, the span error is correctable to ±0.125% of output reading per 1,000 psi.

Vibration Effect

0.05% of URL per g to 200 Hz in any axis

Power Supply Effect

Output Codes S, E, G, and J

Less than 0.005% of output span per volt

Output Codes L, M

Output shift of less than 0.05% of URL for a 1 V power supply shift

Load Effect

Output Codes S, E, G, and J

No load effect other than the change in power supplied to the transmitter.

Output Codes L, M

Less than 0.05% of URL effect for a change in load from 100kΩ to infinite ohms.

Short Circuit Condition (Low Power Only)

No damage to the transmitter will result when the output is shorted to common or to power supply positive (limit 12 V).

EMI/RFI Effect

Output shift of less than 0.1% of span when tested to SAMA PMC 33.1 from 20 to 1000 MHz and for field strengths up to 30 V/m. (Code J is 0.1% of flow span.)

Mounting Position Effect

Zero shift of up to 1 inH_2O (0.25 kPa). Range 3 transmitters with Output Code J should be installed with the diaphragm in the vertical plane.

With liquid level diaphragm in vertical plane, zero shift of up to 1 inH_2O (0.25 kPa). With liquid level diaphragm in horizontal plane, zero shift of up to 5 inH_2O (1.25 kPa) plus extension length on extended units. All zero shifts can be calibrated out. No effect on span.

Physical Specifications, Standard Configuration

Electrical Connections

1/2–14 NPT conduit with screw terminals and integral test jacks compatible with miniature banana plugs (Pomona 2944, 3690, or equivalent). The HART Hand-Held Interface connections are fixed to the terminal block on smart transmitters.

Wetted Materials

Isolating Diaphragms

316L SST, Hastelloy® C-276®, or Tantalum. See ordering table for availability per model type.

Drain/Vent Valves

316 SST or Hastelloy C®, see ordering table for availability per model type.

Process Flanges and Adapters

Plated carbon steel, 316 SST or Hastelloy C, see ordering table for availability per model type.

Wetted O-rings

Viton® (other materials also available)

Weight

12 lb (5.4 kg) for AP, DP, GP, and HP transmitters, excluding options. Meter option: Add 2 lb (1 kg)

Non-wetted Materials

Fill Fluid
- Silicone oil or inert fill

Bolts and Bolting Flange (GP and AP only)
- Plated carbon steel

Electronics Housing
- Low-copper aluminum. NEMA 4X

Cover O-rings
- Buna-N

Paint
- Polyurethane

Process Connections

1/4–18 NPT on 2.125-in. (54-mm) centers on flanges for Ranges 3, 4, and 5.

1/4–18 NPT on 2.188-in. (56-mm) centers on flanges for Ranges 6 and 7.

1/4–18 NPT on 2.250-in. (57-mm) centers on flanges for Range 8.

1/2–14 NPT on adapters.

For Ranges 3, 4, and 5, flange adapters can be rotated to give centers of 2.0 in. (51 mm), 2.125 in. (54 mm), or 2.250 in. (57 mm).

)

TABLE 7. Flange Weights with Model 1151LT Transmitter

Flange(1)	Flush	2-in (50mm) Ext.	4-in. (100mm) Ext.	6-in. (150mm) Ext.
2-in., Class 150	18 (8.2)	N/A	N/A	N/A
3-in., Class 150	23 (10.4)	25 (11.3)	26 (11.8)	27 (12.3)
4-in., Class 150	29 (13.2)	32 (14.5)	34 (15.4)	36 (16.3)
2-in., Class 300	20 (9.1)	N/A	N/A	N/A
3-in., Class 300	28 (12.7)	30 (13.6)	31 (14.1)	32 (14.5)
4-in., Class 300	38 (17.2)	41 (18.6)	43 (19.5)	45 (20.4)
2-in., Class 600	22 (10.0)	N/A	N/A	N/A
3-in., Class 600	31 (14.1)	33 (15.0)	34 (15.4)	35 (15.9)
DN 50, PN10-40	20 (9.1)	N/A	N/A	N/A
DN 80, PN 25/40	25 (11.3)	27 (12.3)	28 (12.7)	29 (13.2)
DN 100, PN 10/16	25 (11.3)	28 (12.7)	30 (13.6)	32 (14.5)
DN 100, PN 25/40	29 (13.2)	32 (14.5)	34 (15.4)	36 (16.3)

(1) Stainless steel flange weights are listed.

Product Certifications

Approved Manufacturing Locations

Rosemount Inc. — Chanhassen, Minnesota, USA

Fisher-Rosemount GmbH & Co. — Wessling, Germany

Emerson Process Management Asia Pacific Private Limited — Singapore

Beijing Rosemount Far East Instrument Co., Limited – Beijing, China

European Directive Information

The EC declaration of conformity for all applicable European directives for this product can be found on the Rosemount website at www.rosemount.com. A hard copy may be obtained by contacting our local sales office.

ATEX Directive (94/9/EC)

Emerson Process Management complies with the ATEX Directive.

European Pressure Equipment Directive (PED) (97/23/EC)

1151GP9, 0; 1151HP4, 5, 6, 7, 8 Pressure Transmitters
— QS Certificate of Assessment - EC No. PED-H-20
Module H Conformity Assessment

All other 1151 Pressure Transmitters
— Sound Engineering Practice

Transmitter Attachments: Diaphragm Seal - Process Flange - Manifold
— Sound Engineering Practice

Electro Magnetic Compatibility (EMC) (89/336/EEC)

All models
— EN 50081-1: 1992; EN 50082-2:1995;

Ordinary Location Certification for Factory Mutual

As standard, the transmitter has been examined and tested to determine that the design meets basic electrical, mechanical, and fire protection requirements by FM, a nationally recognized testing laboratory (NRTL) as accredited by the Federal Occupational Safety and Health Administration (OSHA).

Hazardous Locations Certifications

North American Certifications

Factory Mutual (FM) Approvals

FM Explosion Proof tag is standard. Appropriate tag will be substituted if optional certification is selected.

Explosion Proof: Class I, Division 1, Groups B, C, and D. Dust-Ignition Proof: Class II, Division 1, Groups E, F, and G; Class III, Division 1. Indoor and outdoor use. NEMA 4X. Factory Sealed.

I5 Intrinsically safe for Class I, II, and III Division 1, Groups A, B, C, D, E, F, and G hazardous locations in accordance with entity requirements and Control drawing 01151-0214 and 00268-0031. Non- incendive for Class I, Division 2, Groups A, B, C and D hazardous locations.

For entity parameters see control drawing 01151-0214.

Canadian Standards Association (CSA) Approvals

E6 Explosion proof for Class I, Division 1, Groups C and D; Class II, Division 1, Groups E, F, and G; Class III, Division 1 Hazardous Locations. Suitable for Class I, Division 2, Groups A, B, C, and D; CSA enclosure type 4X. Factory Sealed.

I6 Intrinsically safe for Class I, Division 1, Groups A, B, C, and D hazardous locations when connected per Drawing 01151-2575. For entity parameters see control drawing 01151-2575. Temperature Code T2D.

European Certifications

I1 ATEX Intrinsic Safety and Dust (1151 Smart only)
Certificate No.: BAS99ATEX1294X
ATEX Marking Ⓔx II 1 GD
EEx ia IIC T5 (-60°C ≤ Ta ≤ 40°C)
EEx ia IIC T4 (-60°C ≤ Ta ≤ 80°C)
CE 1180
IP66

TABLE 8. IS Entity Parameters

Ui = 30 V
Ii = 125 mA
Pi = 1.0 W (T4) or 0.67 W (T5)
Ci = 0.034 µF
Li = 20 µH

Special Conditions for Safe Use (X)
The apparatus, is not capable of withstanding the 500V test as required by EN 50020: 1994. This must be taken into account when installing the apparatus.

N1 ATEX Type N and Dust Certification (1151 Smart only)
Certificate No.: BAS 99ATEX3293X
ATEX marking: Ⓔx II 3 GD
EEx nL IIC T5 (-40°C ≤ Ta ≤ 40°C)
EEx nL IIC T4 (-40°C ≤ Ta ≤ 80°C)
Dust Rating: T90 °C (Ta = -20°C to 40°C)
U_i = 45 Vdc Max
CE
IP66

Special Conditions for Safe Use (x)
The apparatus is not capable of withstanding the 500V insulation test required by EN 50021: 1999. This must be taken into account when installing the apparatus.

E8 ATEX Flameproof
Certification Number CESI03ATEX037
ATEX Marking Ⓔx II 1/2 G
EEx d IIC T6 (–40 ≤ Ta ≤ 40 °C)
EEx d IIC T4 (–40 ≤ Ta ≤ 80 °C)
CE 1180
V = 60 Vdc maximum

Australian Certifications

Standards Association of Australia (SAA) Certification

E7 Flameproof
Certificate Number Ex 494X
Ex d IIB + H_2 T6
DIP T6
IP65

Special Conditions for safe use (x):
For transmitters having NPT, PG or G cable entry threads, an appropriate flameproof thread adaptor shall be used to facilitate application of certified flameproof cable glands or conduit system.

I7 Intrinsically Safe
Certificate Number: Ex 122X
Ex ia IIC T5 (T_{amb} = 40 °C)
Ex ia IIC T4 (T_{amb} = 80 °C)

Special Conditions for Safe Use (x):
The equipment has been assessed to the entity concept and accordingly the following electrical parameters must be taken into account during installation.

TABLE 9. Entity Parameters

U_i = 30V
I_i = 125 mA
P_i = 1.0 W (T4) or 0.67W (T5)
C_i = 14.8 nF
L_i = 20 µH

N7 Type N
Certificate Number: Ex 887X
Ex n IIC T6 (T_{amb} = 40 °C)
Ex n IIC T5 (T_{amb} = 80 °C)
IP66

Special Conditions for safe use (x):
The equipment must be connected to a supply voltage which does not exceed the rated voltage. The enclosure end caps must be correctly fitted whilst the equipment is energized.

Combination Certifications

Stainless steel certification tag is provided when optional approval is specified. Once a device labeled with multiple approval types is installed, it should not be reinstalled using any other approval types. Permanently mark the approval label to distinguish it from unused approval types.

C6 Combination of I6 and E6, CSA Explosion Proof and Intrinsic Safety Approval. Factory Sealed.

K5 Combination of Explosion Proof, Intrinsic Safety, and Non-incendive Approvals.

Dimensional Drawings

Model 1151 Transmitter

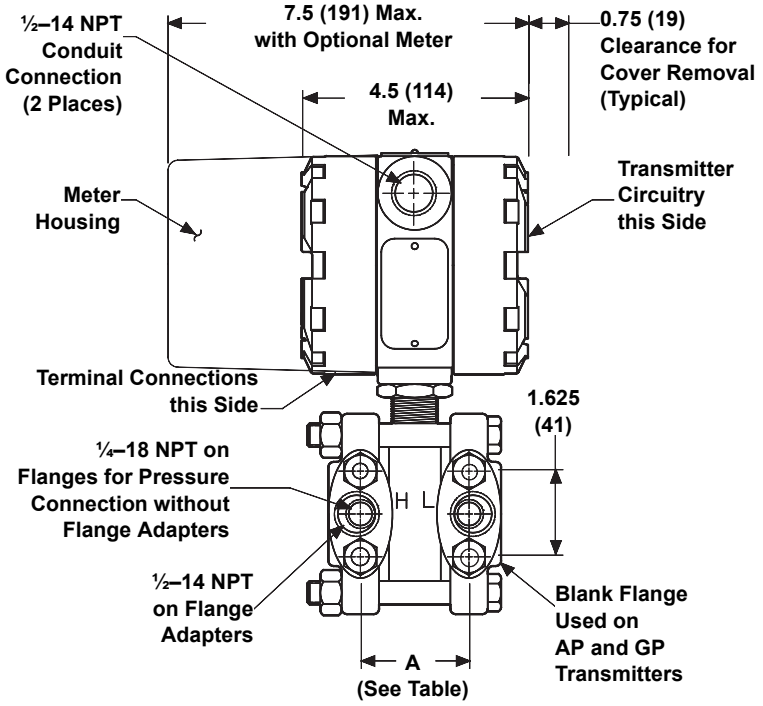

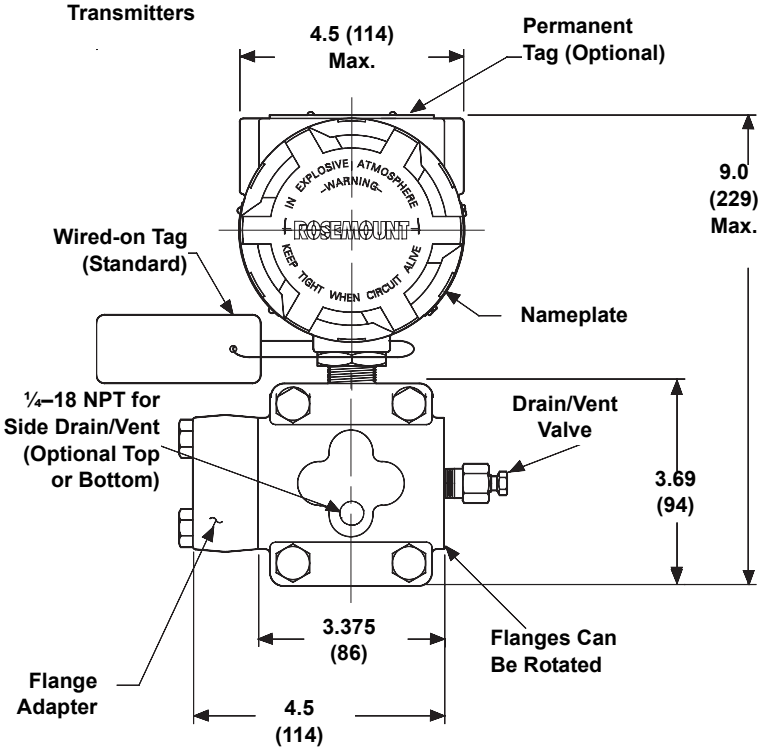

Flange Distance "A" Center to Center		
Range	inches	mm
3, 4, 5	2.125	54
6, 7	2.188	56
8	2.250	57
9	2.281	58
0	2.328	59

NOTE
Dimensions are in inches (millimeters).

Typical Transmitter Exploded View with Smart Electronics

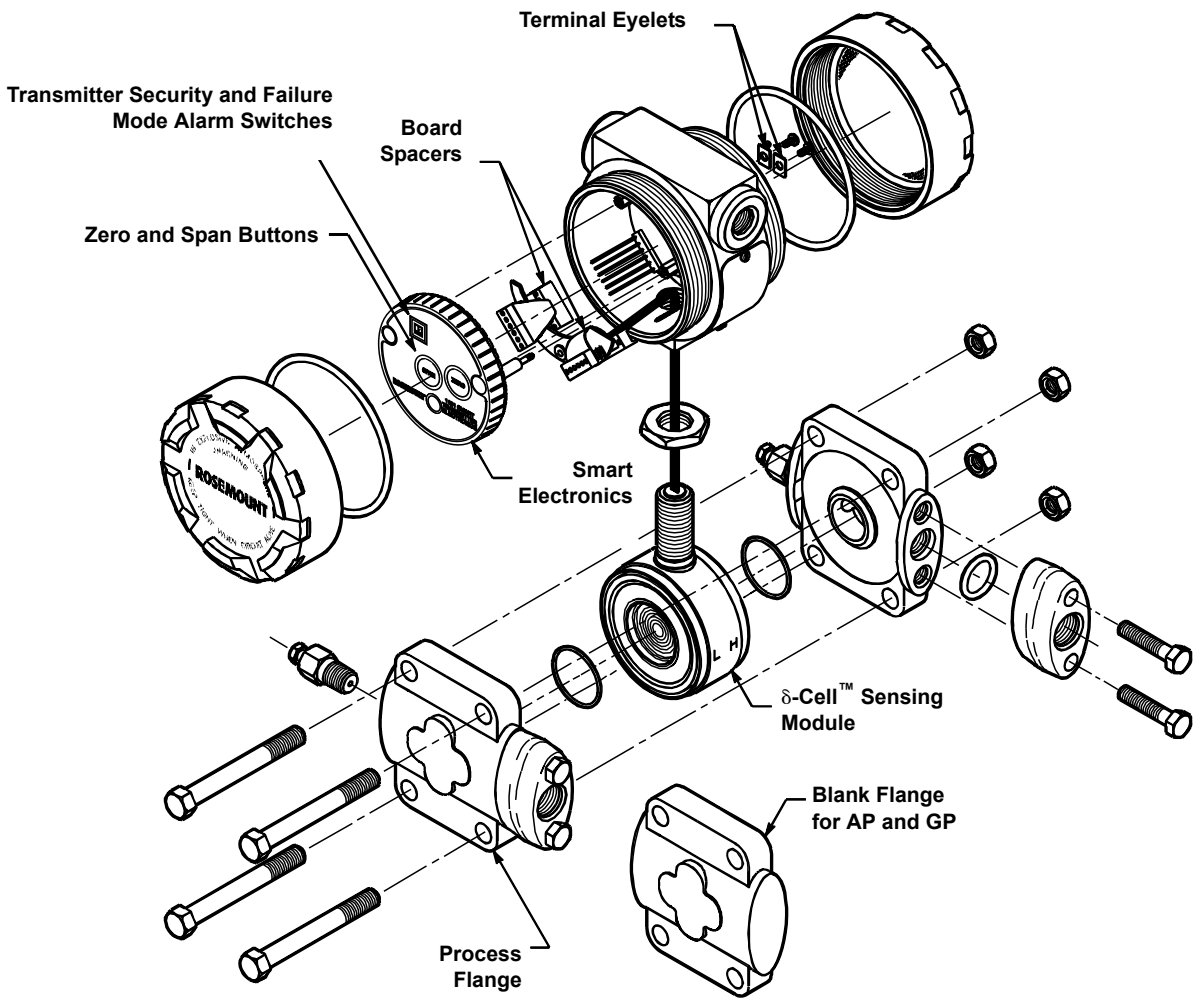

Model 1151LT

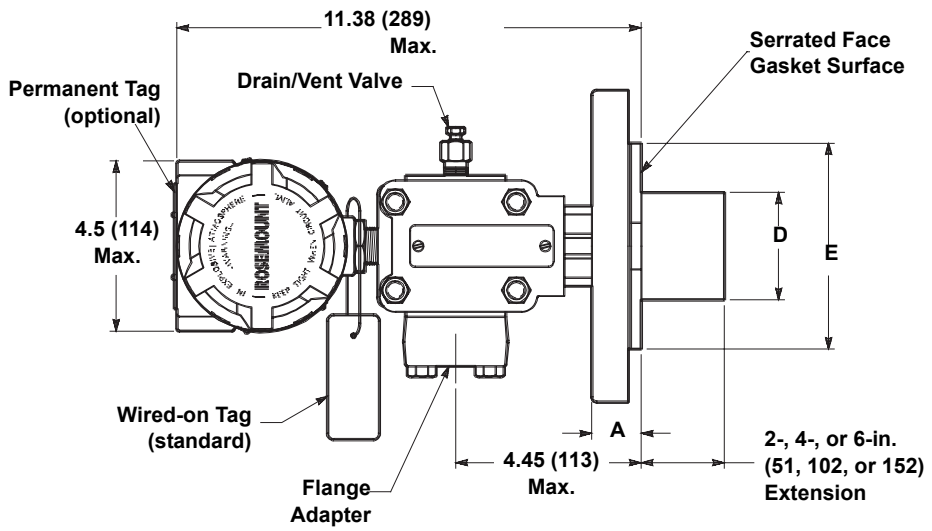

OPTIONAL FLUSHING CONNECTION RING (LOWER HOUSING)

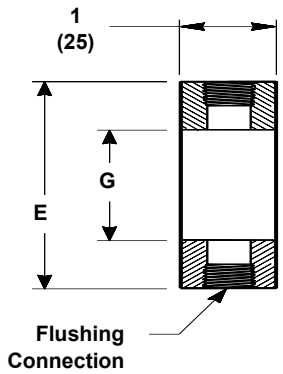

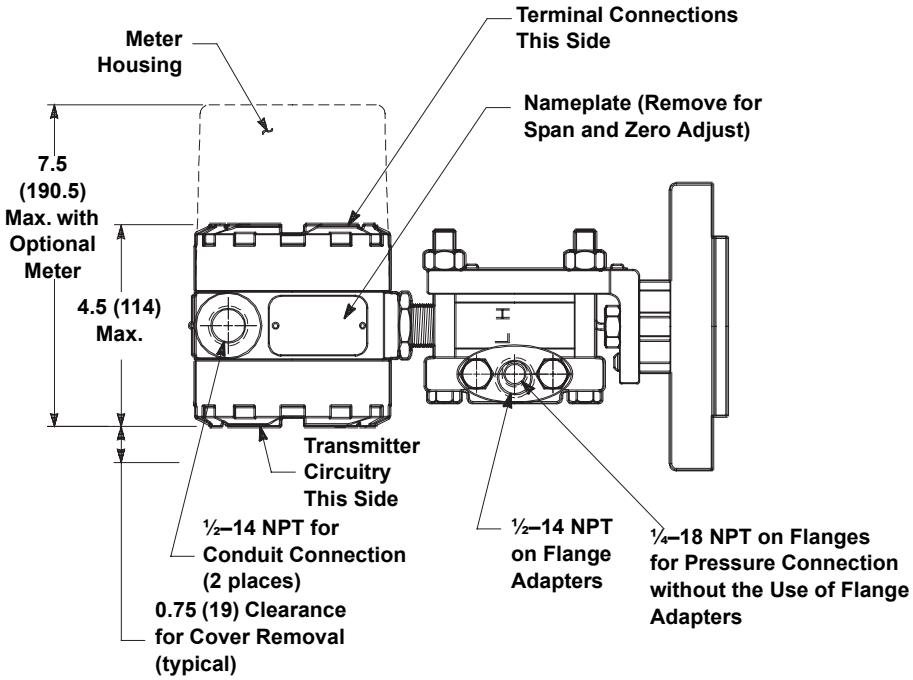

DIAPHRAGM ASSEMBLY AND MOUNTING FLANGE

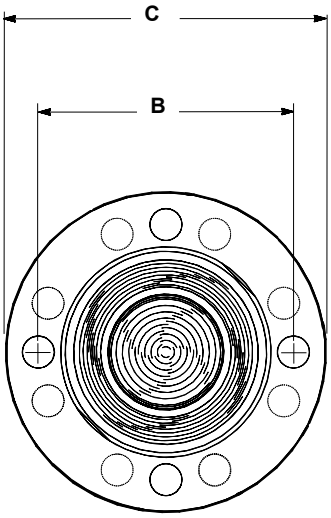

1151-51LTB05A 1151-1151B30B 1151-51LTA05A 3051-3051B27B

NOTE
Dimensions are in inches (millimeters).

TABLE 10. Model 1151LT Dimensional Specifications

Class	Pipe Size	Flange Thickness A	Bolt Circle Diameter B	Outside Diameter C	No. of Bolts	Bolt Hole Diameter	Exten. Diam. D (1)	O.D. Gask. Surf. E	Proc. Side G
ANSI 150	2 (51)	1.12 (28)	4.75 (121)	6.0 (152)	4	0.75 (19)	NA	3.6(92)	2.12 (54)
	3 (76)	1.31 (33)	6.0 (152)	7.5 (191)	4	0.75 (19)	2.58 (66)	5.0 (127)	3.5 (89)
	4 (102)	1.31 (33)	7.5 (191)	9.0 (229)	8	0.75 (19)	3.5 (89)	6.2 (158)	4.5 (114)
ANSI 300	2 (51)	1.25 (32)	5.0 (127)	6.5 (165)	8	0.75 (19)	NA	3.6(92)	2.12 (54)
	3 (76)	1.50 (38)	6.62 (168)	8.25 (210)	8	0.88 (22)	2.58 (66)	5.0 (127)	3.5 (89)
	4 (102)	1.62 (41)	7.88 (200)	10.0 (254)	8	0.88 (22)	3.5 (89)	6.2 (158)	4.5 (114)
ANSI 600	2 (51)	1.12 (28)	5.0 (127)	6.5 (165)	8	0.75 (19)	NA	3.6(92)	2.12 (54)
	3 (76)	1.37 (35)	6.62 (168)	6.62 (168)	8	0.88 (22)	2.58 (66)	5.0 (127)	3.5 (89)
DIN PN10-40	DN 50	26 mm	125 mm	165 mm	4	18 mm	NA	4.0 (102)	2.5 (63)
DIN PN 25/40	DN 80	30 mm	160 mm	200 mm	8	18 mm	65 mm	5.4 (138)	3.7 (94)
	DN 100	30 mm	190 mm	235 mm	8	22 mm	89 mm	6.2 (158)	4.5 (114)
DIN PN 10/16	DN 100	26 mm	180 mm	220 mm	8	18 mm	89 mm	6.2 (158)	4.5 (114)

(1) Tolerances are 0.040 (1.02), –0.020 (0.51).

Mounting Bracket Option Codes B1, B4, and B7

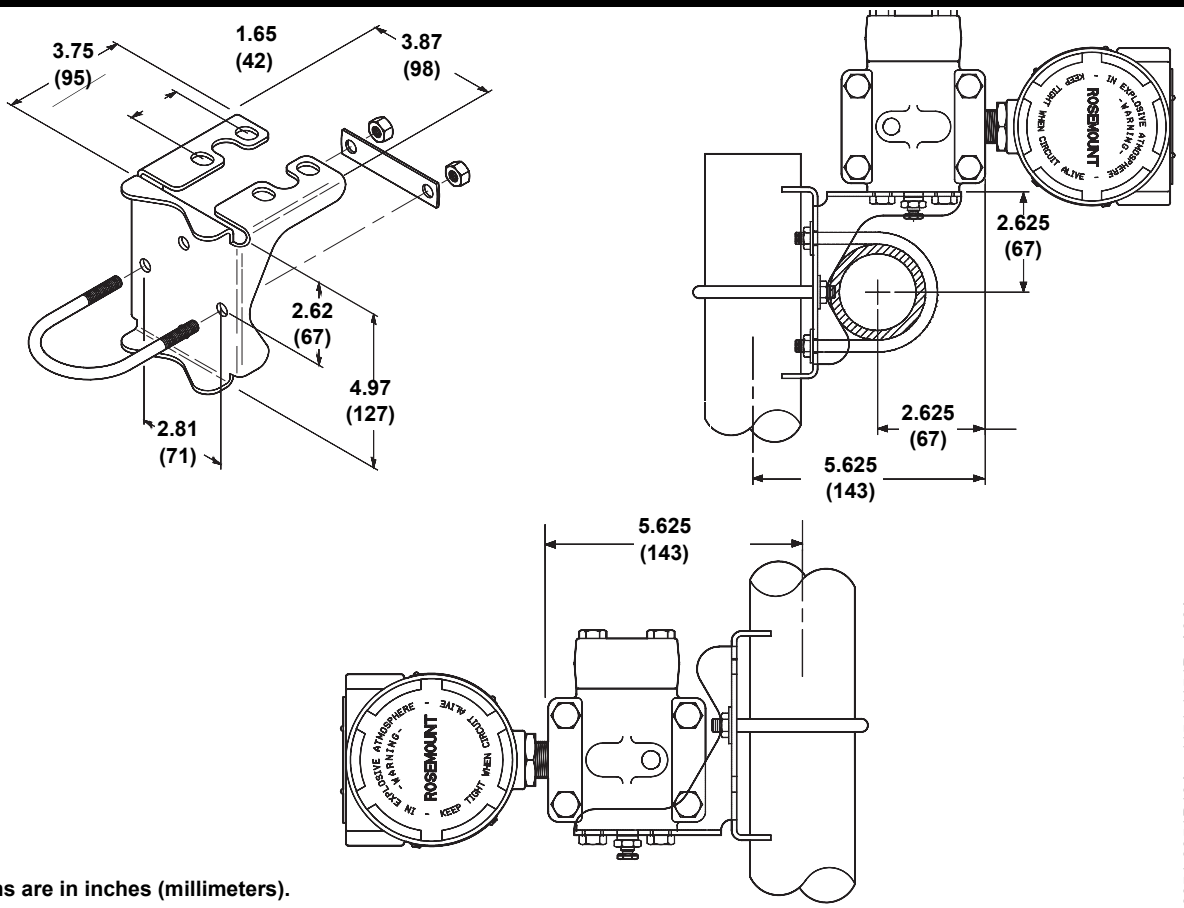

NOTE
Dimensions are in inches (millimeters).

Panel Mounting Bracket Option Codes B2 and B5

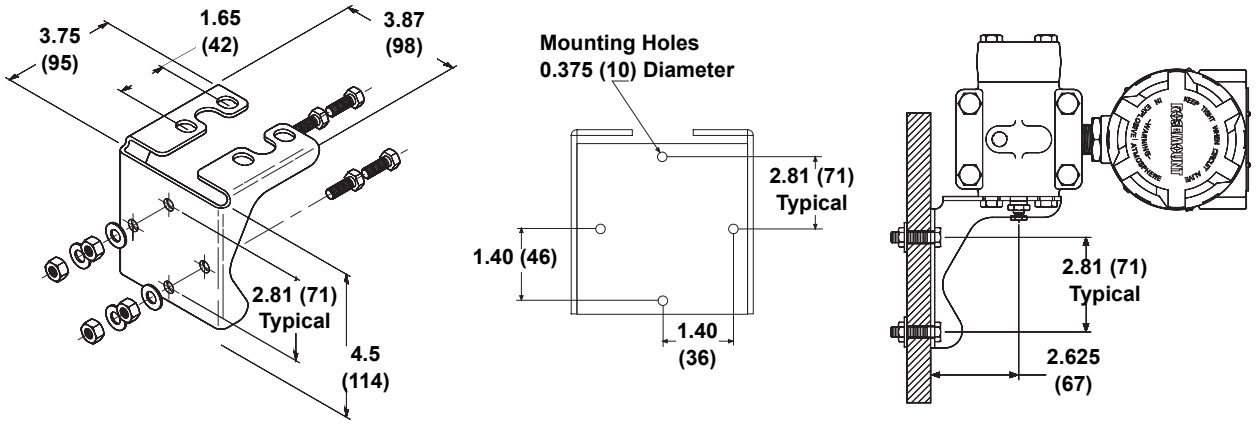

NOTE
Dimensions are in inches

Flat Mounting Bracket Option Codes B3, B6, and B9

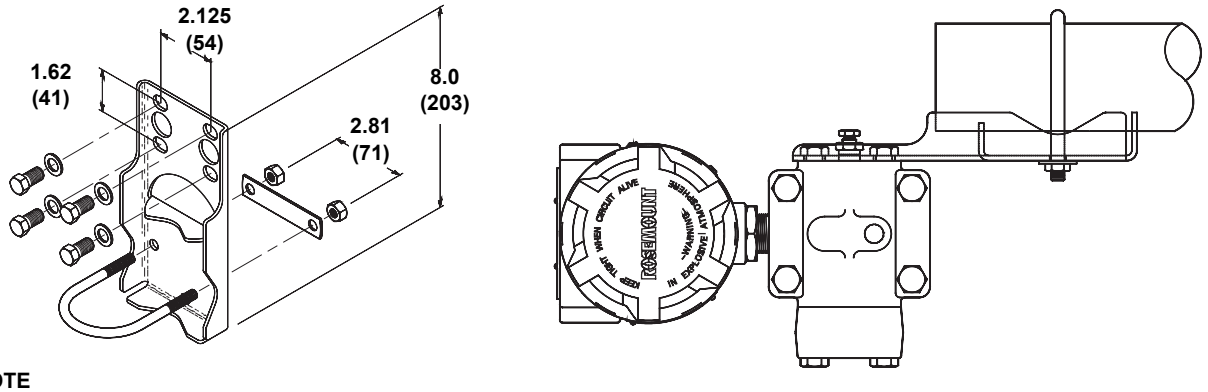

NOTE
Dimensions are in inches (millimeters).

Meter Options

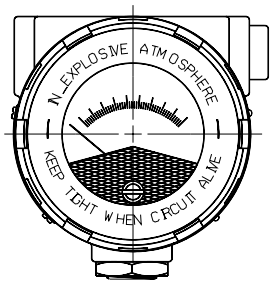

OPTION CODE M1
LINEAR SCALE

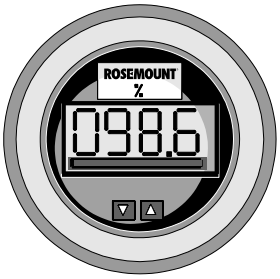

OPTION CODE M4
LINEAR SCALE

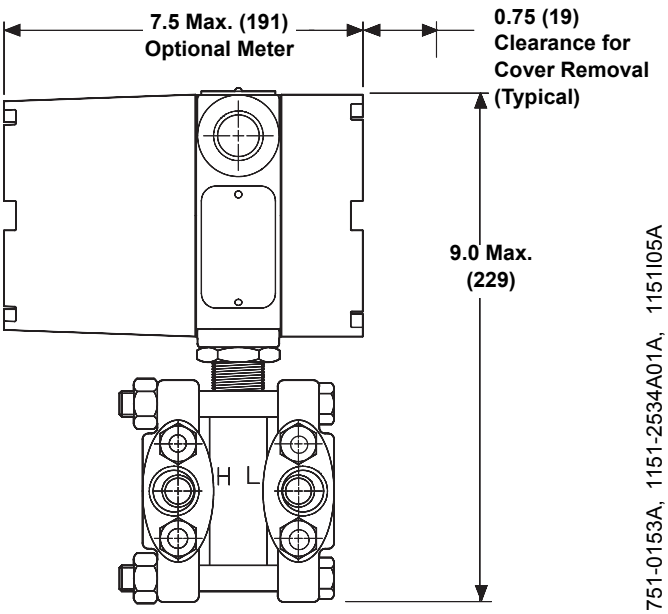

751-0153A, 1151-2534A01A, 1151I05A

NOTE
DImensions are in inches

Flange Insert

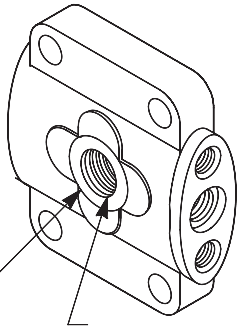

Model 1151 Process Connections

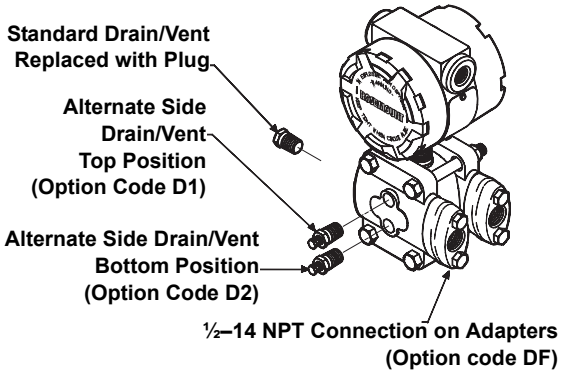

Ordering Information

TABLE 11. Model 1151 Differential, High Line, Gage and Absolute Pressure Transmitters — = Not Applicable • = Applicable

Model	Transmitter Type (select one)	DP	HP	GP	AP
1151DP	Differential Pressure Transmitter	•	—	—	—
1151HP	Differential Pressure Transmitter for High Line Pressures	—	•	—	—
1151GP	Gage Pressure Transmitter	—	—	•	—
1151AP	Absolute Pressure Transmitter	—	—	—	•
Code	**Pressure Ranges (URL) (select one)**	**DP**	**HP**	**GP**	**AP**
3	30 inH_2O (7.46 kPa)	•	—	•	—
4	150 inH_2O (37.3 kPa)	•	•	•	—
5	750 inH_2O (186.4 kPa)	•	•	•	•
6	100 psi (689.5 kPa)	•	•	•	•
7	300 psi (2068 kPa)	•	•	•	•
8	1,000 psi (6895 kPa)	•	—	•	•
9	3,000 psi (20684 kPa)	—	—	•	—
0	6,000 psi (41369 kPa)	—	—	•	—
Code	**Transmitter Output (select one)**	**DP**	**HP**	**GP**	**AP**
S	4–20 mA/Digital, Smart/Variable Damping	•	•	•	•
E	4–20 mA, Linear, Analog/Variable Damping	•	•	•	•
G	10–50 mA, Linear, Analog/Variable Damping	•	•	•	•
J	4–20 mA, Square Root, Analog/Variable Damping	•	•	—	—
L	0.8 to 3.2 V, Linear, Low Power/Fixed Damping	•	•	•	•
M	1 to 5 V, Linear, Low Power/Fixed Damping	•	•	•	•

Code	MATERIALS OF CONSTRUCTION(1) Flanges/Adapters	Drain/Vents	Diaphragms	Fill Fluid	DP	HP	GP(2)	AP(2)
52	Nickel-plated Carbon Steel	316 SST	316L SST	Silicone	•	•	•	•
53	Nickel-plated Carbon Steel	316 SST	Hastelloy C-276	Silicone	•	•	•	•
55	Nickel-plated Carbon Steel	316 SST	Tantalum	Silicone	•	—	•	—
12	Cadmium-plated Carbon Steel	316 SST	316L SST	Silicone	•	•	•	•
22	316 SST	316 SST	316L SST	Silicone	•	•	•	•
23	316 SST	316 SST	Hastelloy C-276	Silicone	•	•	•	•
25	316 SST	316 SST	Tantalum	Silicone	•	—	•	—
33(3)	Hastelloy C	Hastelloy C-276	Hastelloy C-276	Silicone	•	•	•	•
35	Hastelloy C	Hastelloy C-276	Tantalum	Silicone	•	—	•	—
73(3)	316 SST	Hastelloy C-276	Hastelloy C-276	Silicone	•	•	•	•
83(3)	Nickel-plated Carbon Steel	Hastelloy C-276	Hastelloy C-276	Silicone	•	•	•	•
5A	Nickel-plated Carbon Steel	316 SST	316L SST	Inert	•	—	•	—
5B	Nickel-plated Carbon Steel	316 SST	Hastelloy C-276	Inert	•	—	•	—
5D	Nickel-plated Carbon Steel	316 SST	Tantalum	Inert	•	•	•	—
1A	Cadmium-plated Carbon Steel	316 SST	316L SST	Inert	•	—	•	—
2A	316 SST	316 SST	316L SST	Inert	•	—	•	—
2B	316 SST	316 SST	Hastelloy C-276	Inert	•	—	•	—
2D	316 SST	316 SST	Tantalum	Inert	•	—	•	—
3B(3)	Hastelloy C	Hastelloy C-276	Hastelloy C-276	Inert	•	—	•	—
3D	Hastelloy C	Hastelloy C-276	Tantalum	Inert	•	—	•	—
7B(3)	316 SST	Hastelloy C-276	Hastelloy C-276	Inert	•	—	•	—
8B(3)	Nickel-plated Carbon Steel	Hastelloy C-276	Hastelloy C-276	Inert	•	—	•	—

Continued on Next Page

TABLE 11. Model 1151 Differential, High Line, Gage and Absolute Pressure Transmitters — = Not Applicable • = Applicable

Code	Mounting Brackets (Optional – Select One)	DP	HP	GP	AP
B1	Bracket, 2-in. Pipe Mount	•	•	•	•
B2	Bracket, Panel Mount	•	•	•	•
B3	Bracket, Flat, 2-in. Pipe Mount	•	•	•	•
B4	B1 Bracket w/Series 316 SST Bolts	•	•	•	•
B5	B2 Bracket w/Series 316 SST Bolts	•	•	•	•
B6	B3 Bracket w/Series 316 SST Bolts	•	•	•	•
B7	316 SST B1 Bracket with 316 SST Bolts	•	•	•	•
B9	316 SST B3 Bracket with 316 SST Bolts	•	•	•	•
Code	**Meters (optional - select one)(4)**	**DP**	**HP**	**GP**	**AP**
M1	Analog Scale, Linear Meter, 0–100%	•	•	•	•
M2	Analog Scale, Square Root Meter, 0–100% Flow Note: Not available with Output Code J.	•	•	—	—
M3	Analog Scale, Linear Meter, Special Scale	•	•	•	•
M4	LCD Meter, Linear Meter, 0–100%, User Selectable Note: Not available with Output Code G.	•	•	•	•
M6	Analog Scale, Square Root Meter, 1–10√ Note: Not available with Output Code J.	•	•	—	—
M7	LCD Meter, Linear Meter, Special Configuration Note: Not available with Output Code G.	•	•	•	•
M8	LCD Meter Square Root Meter, 0–100% Flow Note: Not available with Output Codes G or J.	•	•	—	—
M9	LCD Meter, Square Root Meter, 0–10√ Note: Not available with Output Codes G or J.	•	•	—	—
Code	**Certifications (optional - select one) Note: FM explosion-proof approval is standard.**	**DP**	**HP**	**GP**	**AP**
I5(5)	Factory Mutual (FM) Approvals Non-incendive and Intrinsic Safety Approval	•	•	•	•
K5	Factory Mutual (FM) Approvals Explosion-Proof and Intrinsic Safety Combination	•	•	•	•
C5(6)	Measurement Canada Accuracy Approval	•	•	•	•
C6(5)	CSA Explosion-Proof and Intrinsic Safety Approval (Requires 42.4 V dc max. power supply)	•	•	•	•
K6(7)	CSA/CENELEC Explosion-Proof and Intrinsic Safety Approval	•	•	•	•
E6	Canadian Standards Association (CSA) Explosion-Proof Approval				
E7	Standards Association of Australia (SAA) Flameproof Certification	•	•	•	•
E8	ATEX Flameproof Certification	•	•	•	•
I1(7)	ATEX Intrinsic Safety and Dust Certification	•	•	•	•
I7(5)	Standards Association of Australia (SAA) Intrinsic Safety Certification	•	•	•	•
N1(7)	ATEX Type N and Dust Certification	•	•	•	•
N7	Standards Association of Australia (SAA) Non-incendive Safety Approval	•	•	•	•
Q4	Calibration Data Sheet	•	•	•	•
Q8(8)	Material Traceability per EN 10204 3.1.B	•	•	•	•
Code	**Housing**	**DP**	**HP**	**GP**	**AP**
H1(9)	SST Non-wetted Parts on Transmitter without Meter	•	•	•	•
H2(9)	SST Non-wetted Parts on Transmitter with Meter	•	•	•	•
H3	SST Housing, Covers, Conduit Plug, Lock-nut, Without Meter	•	•	•	•
H4	SST Housing, Covers, Conduit Plug, Lock-nut, With Meter	•	•	•	•
C1	PG 13.5 Conduit Threads (Available in Germany Only)	•	•	•	•
C2	M20 Conduit Threads (Available in Germany Only)	•	•	•	•
J1	G½ Conduit Threads	•	•	•	•
Code	**Terminal Blocks**	**DP**	**HP**	**GP**	**AP**
R1	Integral Transient Protection (Only available with Option Code S and E electronics)	•	•	•	•
Code	**Bolts for Flanges and Adapters (optional - select one)**	**DP**	**HP**	**GP**	**AP**
L3	ASTM A193-B7 Flange and Adapter Bolts	•	•	•	•
L4	316 SST Flange and Adapter Bolts	•	•	•	•
L5	ASTM A193-B7M Flange and Adapter Bolts	•	•	•	•

Continued on Next Page

TABLE 11. Model 1151 Differential, High Line, Gage and Absolute Pressure Transmitters — = Not Applicable • = Applicable

Code	Process Connections (optional[10])		DP	HP	GP	AP
D1	Side Drain/Vent, Top	316 SST	•	•	•	•
		Hastelloy C-276	•	•	•	•
D2	Side Drain/Vent, Bottom	316 SST	•	•	•	•
		Hastelloy C-276	•	•	•	•
DF	½–14 NPT Flange adapter(s)- Material determined by flange material		•	•	•	•
D4	Conformance to DIN 19213 and DIN 50049 3.1.B Ranges 3, 4, 5 (Available in Germany Only)		•	•	•	•
D5	Conformance to DIN 19213 and DIN 50049 3.1.B Ranges 6, 7, 8, without ¼ NPT Threads or Drain/Vent Valve Connections (Available in Germany Only)		—	—	•	•
D6	316 SST Low Side Blank Flange		•	•	•	•
D9	JIS Process Connection–RC ¼ Flange	Carbon Steel	•	•	•	•
	with RC ½ Flange Adapter	316 SST	•	•	•	•
		Hastelloy C	•	•	•	•
G1	DIN Spacing (Single Entry Port, No Side V/D Hole Flange)		•	•	•	•
G2	DIN Spacing (Single Entry Port, Two Side V/D Hole Flange)		•	•	•	•
G3	DIN Spacing (Dual Entry Port, No Side V/D Hole Flange)		•	•	•	•
G4	DIN Spacing (Dual Entry Port, One Top Side V/D Hole Flange)		•	•	•	•
G5	DIN Spacing (Dual Entry Port, One Bottom Side V/D Hole Flange)		•	•	•	•
G6	DIN Spacing (Dual Entry Port, Two Side V/D Hole Flange)		•	—	•	•
K1[11]	*Kynar* insert, ¼–18 NPT		•	—	•	•
K2[11]	*Kynar* insert, ½–14 NPT		•	—	•	—
S1[12]	Attachment of One Remote Seal		•	—	•	—
S2[12]	Attachment of Two Remote Seals		•	•	—	—
S4[13]	Attachment of Integral Orifice Assembly		•	—	—	—

Continued on Next Page

(1) Bolts and conduit plugs are plated carbon steel.

(2) On GP and AP transmitters, the low-side flange is plated carbon steel. For a stainless-steel low-side flange, order process connection Option Code D6.

(3) Materials of Construction meet NACE material recommendation per MR 01-75. Environmental limits apply to certain materials. Consult latest standard for details.

(4) Not available with Output Codes L or M, or Option Codes V2 or V3.

(5) Not available with Output Code G.

(6) Limited availability depending on transmitter type and range. Contact your Rosemount representative.

(7) Not available with Output Codes E, G, J, L, or M.

(8) This option is available for the transmitter flange and adapters.

(9) Option includes SST housing, covers, conduit plug, locknut, L4 bolting, and D6 low side blank flange for GP and AP transmitters. Option Codes L4 and D6 parts are included with housing Option Codes H1 and H2.

(10) Allowable combinations are: D1, D6; D2, D6; and D6, S1.

(11) The maximum working pressure on this option is 300 psig. Available only with materials of construction Option Codes 1x or 2x.

(12) This option may only be used on Ranges 4–8.

(13) This option has a maximum static pressure rating of 3,000 psi, and is available for factory assembly only without associated piping and is available only for Ranges 2, 3, 4, and 5.

Code	Wetted O-ring Material	DP	HP	GP	AP
W2	Buna-N	•	•	•	•
W3	Ethylene-Propylene	•	•	•	•
W4	Aflas	•	•	•	•
W6(1)	Spring-loaded *Teflon*®	•	—	•	•
W7(2)	Teflon	•	—	•	•
Code	**Procedures**	**DP**	**HP**	**GP**	**AP**
C9(3)	Software Configuration	•	•	•	•
P1(4)	Hydrostatic Testing, 150% Maximum Working Pressure	•	•	•	•
P2(5)	Cleaning for Special Service	•	•	•	•
P3	Cleaning for <1 PPM Chlorine/Fluorine	•	•	•	•
P4	Calibrate at Line Pressure NOTE: Specify Q48 on order for corresponding certificate.	•	•	—	—
P5	Calibrate at Specific Temperature	•	•	•	•
P7(6)	Improved Temperature Coefficient	•	•	•	•
P8(7)	Calibrate to 0.1% Accuracy	•	•	•	—
Code	**Outputs**	**DP**	**HP**	**GP**	**AP**
V1(8)	Reverse Output	—	—	•	—
V2(9)	4–20 mV Test Signal	•	•	•	•
V3(9)	20–100 mV Test Signal	•	•	•	•

Typical Model Number: 1151DP 4 S 52 B3 M1

(1) Contains a Hastelloy spring that is wetted by the process; consult factory for Teflon *O-ring without a spring.*

(2) Teflon O-ring has seal property limitations; Consult your Rosemount representative for more information.

(3) Available with Output Code S only.

(4) Hydrostatic testing for Range 0, 125% maximum working pressure.

(5) Fluorolube® grease on wetted O-rings.

(6) Not available on Range 10: limited to 1,500 psi on Range 9; not applicable with Output Code S.

(7) Available only with stainless steel isolators and for span of 10 inH_2O and greater; not available with Output Code S ranges 3 - 8, or Output Code J; not available on AP.

(8) Reverse output option is not needed with smart electronics; configured via HART-based communicator.

(9) Not available with Output Codes L or M.

TABLE 12. Rosemount 1151 LT Flange-Mounted Liquid Level Transmitter

Model	Product Description		
1151LT	Alphaline Flange-Mounted Liquid Level Transmitter		
Code	**Range**		
4	150 inH_2O (3,810 mmH_2O)		
5	750 inH_2O (9,050 mmH_2O)		
6	2,770 inH_2O (70,36 mmH_2O)		
Code	**Output**		
S	4–20 mA dc HART Protocol, Smart/Variable Damping		
E	4–20 mA dc, with Adjustable Damping		
G	10–50 mA dc, with Adjustable Damping		
Code	**Size**	**Material**	**Extension Length(1)**
G0	2 in./DN 50	316L SST	Flush Mount Only
H0	2 in./DN 50	Hastelloy C-276	Flush Mount Only
J0	2 in./DN 50	Tantalum	Flush Mount Only
A0	3 in./DN 80	316L SST	Flush Mount
A2	3 in./DN 80	316L SST	2 in./50 mm
A4	3 in./DN 80	316L SST	4 in./100 mm
A6	3 in./DN 80	316L SST	6 in./150 mm
B0	4 in./DN 100	316L SST	Flush Mount
B2	4 in./DN 100	316L SST	2 in./50 mm
B4	4 in./DN 100	316L SST	4 in./100 mm
B6	4 in./DN 100	316L SST	6 in./150 mm
C0	3 in./DN 80	Hastelloy C-276	Flush Mount
C2	3 in./DN 80	Hastelloy C-276	2 in./50 mm
C4	3 in./DN 80	Hastelloy C-276	4 in./100 mm
C6	3 in./DN 80	Hastelloy C-276	6 in./150 mm
D0	4 in./DN 100	Hastelloy C-276	Flush Mount
D2	4 in./DN 100	Hastelloy C-276	2 in./50 mm
D4	4 in./DN 100	Hastelloy C-276	4 in./100 mm
D6	4 in./DN 100	Hastelloy C-276	6 in./150 mm
E0	3 in./DN 80	Tantalum	Flush Mount Only
F0	4 in./DN 100	Tantalum	Flush Mount Only

Continued on Next Page

(1) Extension diameters are sized to fit schedule 80 pipe. Consult factory for Schedule 40 pipe.

	MOUNTING FLANGE			
Code	**Size**	**Rating**		**Material**
M	2 in.	Class 150	ANSI	CS
A	3 in.	Class 150	ANSI	CS
B	4 in.	Class 150	ANSI	CS
N	2 in.	Class 300	ANSI	CS
C	3 in.	Class 300	ANSI	CS
D	4 in.	Class 300	ANSI	CS
P	2 in.	Class 600	ANSI	CS
E	3 in.	Class 600	ANSI	CS
X	2 in.	Class 150	ANSI	SST
F	3 in.	Class 150	ANSI	SST
G	4 in.	Class 150	ANSI	SST
Y	2 in.	Class 300	ANSI	SST
H	3 in.	Class 300	ANSI	SST
J	4 in.	Class 300	ANSI	SST
Z	2 in.	Class 600	ANSI	SST
L	3 in.	Class 600	ANSI	SST
Q	DN 50	PN 10-40	DIN	CS
R	DN 80	PN 40	DIN	CS
S	DN 100	PN 40	DIN	CS
V	DN 100	PN 10/16	DIN	CS
K	DN 50	PN 10-40	DIN	SST
T	DN 80	PN 40	DIN	SST
U	DN 100	PN 40	DIN	SST
W	DN 100	PN 10/16	DIN	SST

	SENSOR MODULE AND LOW-SIDE MATERIALS OF CONSTRUCTION			
Code	**Low-Side Flange and Adapter**	**Drain/Vent Valves**	**Low-Side Isolator Diaphragm**	**Low-Side Fluid Fill**
52	Nickel-plated CS	316 SST	316L SST	Silicone
12	Cadmium-plated CS	316 SST	316L SST	Silicone
55	Ni Plated CS	316 SST	Tantalum	Silicone
22	316 SST	316 SST	316L SST	Silicone
23	316 SST	316 SST	Hastelloy C-276	Silicone
25	316 SST	316 SST	Tantalum	Silicone
33	Hastelloy C	Hastelloy C-276	Hastelloy C-276	Silicone
35	Hastelloy C	Hastelloy C-276	Tantalum	Silicone
1A	Cadmium-plated CS	316 SST	316L SST	Inert
5D	Nickel-plated CS	316 SST	Tantalum	Inert
2A	316 SST	316 SST	316L SST	Inert
2B	316 SST	316 SST	Hastelloy C-276	Inert
2D	316 SST	316 SST	Tantalum	Inert
3B	Hastelloy C	Hastelloy C-276	Hastelloy C-276	Inert
3D	Hastelloy C	Hastelloy C-276	Tantalum	Inert

Code	**Process Fill—High Pressure Side**	**Temperature Limits**
A	Syltherm XLT	–100 to 300 °F (–73 to 135 °C)
C	D. C. Silicone 704	60 to 400 °F (15 to 205 °C)
D	D. C. Silicone 200	–40 to 400 °F (–40 to 205 °C)
H	Inert	–50 to 350 °F (–45 to 177 °C)
G	Glycerin and Water	0 to 200 °F (–17 to 93 °C)
N	Neobee M-20	0 to 400 °F (–17 to 205 °C)
P	Propylene Glycol and Water	0 to 200 °F (–17 to 93 °C)

Continued on Next Page

Code	Options (see complete approvals descriptions)
S1[1]	Assembly of one Remote Seal
	Meters
M1[2]	Linear Meter, 0–100% Scale
M3[2]	Special Scale Meter, Specify Range
M4[2]	LCD Meter, 0–100%
M7[2][3]	LCD Meter, Linear, Special Configuration
	Harzardous Locations Certifications NOTE: FM explosion-proof approval is standard.
E6	Canadian Standards Association (CSA) Explosion-Proof Approval
I5[3]	Factory Mutual (FM) Approvals Non-incendive and Intrinsic Safety Approval
K5	Factory Mutual (FM) Approvals Explosion-Proof and Intrinsic Safety Combination
C5[4]	Measurement Canada Accuracy Approval
C6[3]	CSA Explosion-Proof and Intrinsic Safety Approval (Requires 42.4 V dc max. power supply)
K6[3]	ATEX Explosion-Proof and Intrinsic Safety Approval
E7	Standards Association of Australia (SAA) Flameproof Certification
E8	ATEX Flameproof Certification
I1[3]	ATEX Intrinsic Safety and Dust Certification
I7[3]	Standards Association of Australia (SAA) Intrinsic Safety Certification
N1[3]	ATEX Type N and Dust Certification
N7	Standards Association of Australia (SAA) Non-incendive Safety Approval
	Other Options
W5	Copper O-ring for Vacuum Service (Nonwetted)
Q4	Calibration Data Sheet
Q8[5]	Material Traceability per EN 10204 3.1.B
V1	Reverse Output
V2	4–20 mV Test Signal
V3	20–100 mV Test Signal
F_	Select One Code from Flushing Connections Lower Housing Option

Code	Flushing Connection Ring Material (Lower Housing)	Flushing Connections	Size	Diaphragm Size 2-in.	3-in.	4-in.
F1	SST	1	1/4-18 NPT	•	•	•
F2	SST	2	1/4-18 NPT	•	•	•
F3[6]	Hastelloy C-276	1	1/4-18 NPT	•	•	•
F4[6]	Hastelloy C-276	2	1/4-18 NPT	•	•	•
F7	SST	1	1/4-18 NPT	•	•	•
F8	SST	2	1/4-18 NPT	•	•	•
F9	Hastelloy C-276	1	1/4-18 NPT	•	•	•
F0	Hastelloy C-276	2	1/4-18 NPT	•	•	•

Typical Model Number: 1151LT 4 S A0 A 52 D F1

(1) For welded capillary assemblies, order sensor module and low-side materials of construction Option Code 22.

(2) Not available with Option Codes V2, or V3.

(3) Not available with Output Code G.

(4) Limited availability depending on transmitter type and range. Contact your Rosemount representative.

(5) Available for the diaphragm, upper housing, flange, adapter, extension, and lower housing.

(6) Not available with high pressure side Option Codes A0, B0, and G0.

Standard Accessories

All models are shipped with flange adapters, drain/vent valves, and one instruction manual per shipment.

Tagging

The Alphaline Pressure Transmitter will be tagged, at no charge, in accordance with customer requirements. All tags are stainless steel. The standard tag is wired to the transmitter.
Tag character height is 0.125 in. (0.318 cm). A permanently attached tag is available upon request.

Calibration

Transmitters are factory calibrated to the customer's specified range. If calibration is not specified, the transmitters are calibrated at maximum range. Calibration is performed at ambient temperature and pressure.

Optional Three-Valve Manifolds

Part No. 01151-0150-0001:
- 3-valve manifold, carbon steel

Part No. 01151-0150-0002:
- 3-valve manifold, 316 SST

Optional Diaphragm and Sanitary Seals

Refer to Product Data Sheet 00813-0100-4016 or 00813-0201-4016.

Options

The following sections describe a variety of available options for the 1151 Transmitter. These options permit greater application flexibility.

Mounting Brackets

B1 Bracket for 2-in. Pipe Mounting
- Bracket for mounting transmitter on 2-in. pipe
- Constructed of carbon steel with carbon steel U-bolt
- Coated with polyurethane paint

B4 Bracket for 2-in. Pipe with 316 SST Bolts
- Same bracket as Option Code B1 with 316 SST bolts

B7 304 SST Bracket and 316 SST Bolts for 2-in. Pipe Mounting
- Same bracket as Option Code B1 with all SST materials

B2 Bracket for Panel Mounting
- Bracket for mounting transmitter on panel or wall
- Constructed of carbon steel with carbon steel bolts
- Coated with polyurethane paint

B5 Bracket for Panel with 316 SST Bolts
- Same bracket as Option Code B2 with 316 SST bolts

B3 Flat Bracket for 2-in. Pipe Mounting
- Bracket for vertical mounting of transmitter on 2-in. pipe
- Constructed of carbon steel with carbon steel U-bolt
- Coated with polyurethane paint

B6 Flat Bracket for 2-in. Pipe with 316 SST Bolts
- Same bracket as Option Code B3 with 316 SST bolts

B9 304 SST Flat Bracket and 316 SST Bolts for 2-in. Pipe Mounting
- Same bracket as Option Code B3 with all 316 SST materials

Bolts and Nuts for Flanges and Adapters

Options permit bolts and nuts for flanges and adapters in the specified material.
- L3 ANSI/ASTM A - 193-B7
- L4 Austenitic 316 SST
- L5 ANSI/ASTM A193-B7M

Meters

Analog
- Meters have 2-in. (50.8 mm) scale
- Plug-in mounting configuration
- Indication accuracy ±2%
- Operating temperature limit: –40 to 150 °F (–40 to 65 °C)
- Meters are enclosed in a housing certified by Factory Mutual as explosion proof for Class I, Division 1, Groups B, C, and D; Class II, Division 1, Groups E, F, and G and Class III, Division 1
- For optional CSA explosion-proof approval, see certification Option Code E6
- M1 Linear Analog Meter, 0–100% Scale
- M2 Square Root Analog Meter, 0–100% Flow Scale
- M3 Special Scaling Analog Meter (Specify Range)
- M6 Square Root Analog Meter, 0– 10√ Scale

LCD
- 4-digit display
- Indication accuracy ±0.25% of calibrated span ±1 digit
- Display resolution at ±0.5% of calibrated span ±1 digit
- Operating temperature limit: –4 to 158 °F (–20 to 70 °C)
- Plug-in mounting configuration
- Meters are enclosed in a housing certified by Factory Mutual as explosion proof for Class I, Division 1, Groups B, C, and D; Class II, Division 1, Groups E, F, and G and Class III, Division 1
- For Optional CSA explosion-proof approval, see certification Option Code E6
- M4 Linear LCD Meter, 0 to 100%
- M7 Special Scale LCD Meter (Specify Range, Mode, and Engineering Units)
- M8 Square Root LCD Meter, 0 to 100%
- M9 Square Root LCD Meter, 0–10√ Scale

NOTES
Meter Options are not available with Output Codes L or M, or Option Codes V2 or V3. Meter Options M2, M6, M8, and M9 are not available with Output Code J. Meter Options M4, M7, M8, and M9 are not available with Output Code G.

Process Connections

D1 Side Drain/Vent-Top
- Drain/vent valve mounted in side of flange.
- Top position used to vent gas buildup in liquid process applications with transmitter mounted vertically.
- Plug of same material as requested flange inserted in end of flange opposite adapter.

D2 Side Drain/Vent-Bottom
- Drain/vent valve mounted in side of flange.
- Bottom position used to drain liquid buildup in gas process applications with transmitter mounted vertically.
- Plug of same material as requested flange inserted in end of flange opposite adapter.

D6 316 SST Low Side Flange (Rosemount 1151GP and 1151AP Only)

DF 1/2–14 NPT flange adapters
- Options provide 1/2–14 NPT process connection on flanges rather than 1/4–18 NPT

K1 1/4–18 NPT Kynar™ Process Flange Insert

K2 1/2–14 NPT Kynar Process Flange Insert
- Options provide Kynar plastic process flange insert that prevents process from coming in contact with the metal of the flange. One process insert for Rosemount 1151AP, GP and LT; two inserts for Rosemount1151DP.
- Process connections are from the side.
- Available with carbon steel and stainless steel process flanges only.
- Pressure Maximum: 200 psi at 200 °F with Kynar impulse piping; 300 psi at 200 °F with metal impulse piping.

S1 Assembled with One Remote Diaphragm Seal

S2 Assembled with Two Remote Diaphragm Seals
- Options provide for the assembly of one or two remote diaphragm seals.

S4 Assembled with 1195 Integral Orifice
- Designed for highly accurate, small-bore flow measurement of any clean gas, liquid, or vapor.
- Reduce the costs associated with traditional orifice plate installations.
- Several configurations are available factory assembled to Rosemount differential pressure transmitters.(1)
- Wide orifice bore/flow range capability.
- Wide choice of process connections, including threaded, socket weld, and ANSI flanges.
- Static pressure maximum limit is 3,000 psig.
- Wetted materials are available that comply with NACE MR 01-75(90).
- Available only with Ranges 2, 3, 4, and 5.

Wetted O-rings
- Standard: Viton® (2)
- W2 Buna N
- W3 Ethylene-Propylene
- W4 Aflas®
- W5 Copper O-ring for Vacuum Service (Nonwetted - Rosemount 1151LT only)
- W6 Spring-Loaded Teflon
- Contains a Hastelloy spring that is in contact with the process fluid. Consult factory if Hastelloy is unacceptable.
- W7 Teflon

Procedures

Standard Configuration

Unless otherwise specified, transmitter will be shipped as follows:

Engineering Units:	inH_2O
4 mA:	0
20 mA:	Upper Range Limit
Output:	Linear
Software Tag:	Blank

Customer may specify the above items at no charge. Software tag (8 characters) is left blank unless specified.

C9 Custom Configuration (Option Code C9)

If Option Code C9 is ordered, the customer may specify the following data in addition to the standard configuration parameters.

Descriptor:	16 characters
Message:	32 characters
Date:	Day, Month, Year
Damping:	Seconds
Burst Mode:	Select Output Choice
Flange Material:	Model Code Information
O-Ring Material:	Model Code Information
Isolator Material:	Model Code Information
Sensor Fluid:	Model Code Information
Drain/Vent:	Model Code Information
Integral Meter:	installed or None
Remote Seal:	Specified Information
Failure Mode:	High or Low
Transmitter Security:	Off or On

TABLE 13. Hydrostatic Test Pressure

Model	Test Pressure
1151DP	3,000 psi
1151HP	6,750 psi
1151AP	2,000 psi
1151GP	
Ranges 3–8	2,000 psi
Range 9	4,500 psi
Range 0	7,500 psi
1151LT	
Class 150 Flange	450 psi
Class 300 Flange	1,100 psi

P1 Hydrostatic Testing
- Each transmitter is hydrostatic tested according to Table 13.
- Test medium is water.
- This option provided for transmitters with remote diaphragm seal on application only.
- Rosemount Procedure 1746 outlines the testing procedure.

P2 Cleaning for Special Service
- This option minimizes contaminants to the process system by cleaning wetted surfaces with a suitable detergent.
- Rosemount Procedure 97412 outlines the cleaning procedure.

P3 Cleaning for <1 PPM Chlorine/Fluorine

(1) Applicable only to orifice assemblies without piping.
(2) For enhanced sealing performance below 0°F (-18 °C), consult factory.

P4 Calibration at Line Pressure

- This option allows transmitters to be calibrated at an elevated line pressure rather than atmospheric pressure.
- Customer must specify line pressure at which transmitter is to be calibrated.
- Customer is provided with calibration data at line pressure by ordering Q48 certificate.
- Available with Rosemount 151DP and 1151HP only. (Not available with Remote Seals.)
- Elevated line pressure and differential span desired for calibration must not exceed the rated pressure for transmitter model.
- Minimum differential span that can be calibrated at elevated line pressure is 30 inH_2O; maximum is 300 psi.
- Rosemount Procedure 3787 outlines the calibration procedure.

P5 Calibration at Temperature

- This option allows transmitters to be calibrated at temperatures other than room temperature in the range of 0 to 200 °F (–18 to 93 °C).
- Customer must specify temperature at which transmitter is to be calibrated and calibration range.
- Calibration temperature will be printed on instrument tag specified by customer, or on a tag wired to the transmitter if no tag is specified.
- Rosemount Procedure 27823B outlines the calibration procedure.

P8 0.1% Accuracy

- Available on Rosemount 1151DP (Ranges 3–8), GP (Ranges 3–8), HP, and LT transmitters with 316 SST diaphragms and Output Codes E, G, L, and M. Also available on 1151DP (Range 9–0) and 1151GP (Range 9–0) with Output Code S (Min. Span = URL/10).

P7 Enhanced Temperature Performance for Analog Electronics

- Transmitter is specifically compensated as a complete assembly and will exhibit 1/2 of the standard temperature coefficient over the ambient temperature range of 20 to 140 °F (–7 to 60 °C). Outside this range, the unit will meet the standard temperature effect specification published for transmitter model.
- Not available on Range 10, limited to 1,500 psi on Range 9.
- The transmitter is compensated as an assembly; therefore, units in which the sensor module or electronics are changed after the P7 procedure has been performed will meet the standard published temperature specification for that particular model.
- Available on DP, GP, and HP models, Ranges 3–8, with SST diaphragms and Output Codes E, G, L, and M.

Outputs

V1 Reverse Output

- This option permits reversing of pressure input so that electrical output will increase as pressure input decreases.
- This option applies only to Rosemount 1151GP and 1151LT. When this option is selected, the process flange, adapter, drain/vent valve, appropriate O-rings, and bolting are installed on low side of transmitter. Not available for Ranges 9 and 0.
- Not available with 1151AP. Reverse output on Rosemount 1151DP and 1151HP can be obtained by connecting high-pressure input to low side of transmitter and vice versa.
- This option should not be ordered with smart transmitters (Output Code S). The 1151 Smart transmitter can be configured for reverse output through a HART-Compatible Interface.

V2 1 Ω Test Resistor

- A 1 Ω precision resistor is mounted across the test terminals to provide 4–20 mV output or a 10–50 mV output if 10–50 mA output is used.
- This option cannot be used with any meter options or Option Codes I5 or I6.

V3 5 Ω Test Resistor

- A 5 Ω precision resistor is mounted across test terminals to provide 20–100 mV output or a 50–250 mV output if 10–50 mA output is used.
- This option cannot be used with any meter options or Option Codes I5 or I6.

Rosemount, the Rosemount logotype are registered trademarks of Rosemount Inc. HART is a registered trademark of the HART Communication Foundation. δ-Cell is a trademark of Rosemount Inc. Fluorolube is a registered trademark of Hooker Chemical Co. Hastelloy, Hastelloy C, and Hastelloy C-276 are registered trademarks of Cabot Corp. Viton is a registered trademark of E.I. du Pont de Nemours & Co. Neobee M-20 is a registered trademark of Stepan Chemical Co. Syltherm and D.C. are registered trademarks of Dow Corning Corp. Teflon is a registered trademark of E.I. du Pont de Nemours & Co. Aflas is a registered trademark of Asahi Glass Co., Ltd. Kynar is a trademark of Pennwalt Inc..

Emerson Process Management

Rosemount Inc.
8200 Market Boulevard
Chanhassen, MN 55317 USA
T (U.S.) 1 800 999 9307
T (International) (952) 906 8888
F (952) 949 7001

Fisher-Rosemount GmbH & Co.
Argelsrieder Feld 3
82234 Wessling
Germany
Tel 49 (8153) 9390
Fax 49 (8153) 939172

Emerson Process Management Asia Pacific Private Limited
1 Pandan Crescent
Singapore 128461
T (665) 6777 8211
F (665) 6777 0947
AP.RMT-Specialist@emersonprocess.com

Beijing Rosemount Far East Instrument Co., Limited
No. 6 North Street,
Hepingli, Dong Cheng District
Beijing 100013, China
T (86) (10) 6428 2233
F (86) (10) 6422 8586

www.rosemount.com

© 2003 Rosemount Inc. All rights reserved.

EMERSON
Process Management

Reference Manual
00809-0100-4360, Rev BA
August 2008

Rosemount 1151 Pressure Transmitter

ROSEMOUNT®

www.rosemount.com

EMERSON™
Process Management

Rosemount 1151
Pressure Transmitter

NOTICE

Read this manual before working with the product. For personal and system safety, and for optimum product performance, make sure you thoroughly understand the contents before installing, using, or maintaining this product.

For technical assistance, contacts are listed below:

Customer Central
Technical support, quoting, and order-related questions.

United States - 1-800-999-9307 (7:00 am to 7:00 pm CST)

Asia Pacific- 65 777 8211

Europe/ Middle East/ Africa - 49 (8153) 9390

North American Response Center
Equipment service needs.

1-800-654-7768 (24 hours—includes Canada)

Outside of these areas, contact your local Emerson Process Management representative.

⚠CAUTION

The products described in this document are NOT designed for nuclear-qualified applications.

Using non-nuclear qualified products in applications that require nuclear-qualified hardware or products may cause inaccurate readings.

For information on Rosemount nuclear-qualified products, contact your local Emerson Process Management Sales Representative.

May be protected by one or more of the following U.S. Patent Nos. 4,804,958; 4,866,435; 4,878,012; 4,988,990; 5,083,091; 5,094,109; 5,237,285; Des. 317,266; Des. 318,432. Mexico Pats. Pend. 6057,912237. May depend on model. Other foreign patents issued and pending.

Table of Contents

SECTION 1 Introduction

Using This Manual 1-1
Models Covered 1-2

SECTION 2 Installation

Overview 2-1
Safety Messages 2-2
Warnings 2-2
General Considerations 2-4
Transmitter Access Requirements 2-4
Mechanical Considerations 2-5
Mounting Considerations 2-8
Mounting Requirements (for Steam, Liquid, Gas) 2-8
Process Connections 2-10
Mounting Brackets 2-11
Electrical Considerations 2-13
Power Supply 2-13
Conduit Installation 2-13
Wiring 2-14
Grounding 2-15
Hazardous Locations Certifications 2-17
Environmental Requirements 2-17
Liquid Level Measurement 2-17
Closed Vessels 2-17
Installation Options 2-21
Mounting Brackets 2-21
Analog Displays 2-21
LCD Displays 2-21
Terminal Blocks 2-24

SECTION 3 Configuration (Smart Only)

Overview 3-1
Safety Messages 3-1
Warnings 3-1
Commissioning the Transmitter on the Bench 3-1
Setting Hardware Switches 3-1
Commissioning with a HART-Based Communicator 3-3
Wiring Diagrams 3-3
Bench Hook-up 3-3
Field Hook-up 3-4
Hart Communicator 3-5
Testing the Equipment and the Loop 3-6
Common Functions 3-7
Configure the Analog Output Parameters 3-7
Reranging 3-7
Advanced Functions 3-12
Multidrop Communication 3-13

SECTION 4 Operation and Maintenance

Overview 4-1
Safety Messages 4-1
Warnings 4-1
Smart Calibration 4-2
Calibration Overview 4-2
Calibrate the Sensor 4-4
Digital to Analog Converter Trim 4-8
Analog Calibration 4-9
Calibration Overview 4-9
Quick Calibration Procedure (for E and G Electronics) 4-9
Quick Calibration Procedure (For L and M Electronics) 4-9
Data Flow with Calibration Options 4-11
Span Adjustment Range 4-11
Zero Adjustment Range 4-11
Zero and Span Adjustment 4-13
Elevated or Suppressed Zeros 4-14
Linearity Adjustment 4-15
Damping Adjustment 4-15
Static Pressure Span Correction Factor 4-16

SECTION 5 Troubleshooting

Overview 5-1
Safety Messages 5-1
Warnings 5-1
Smart Troubleshooting 5-3
Disassembly Procedure 5-5
Reassembly Procedure 5-7
Optional Plug-in Meters 5-9
Sensor Module Checkout 5-9
Analog Troubleshooting 5-10
Hardware Diagnostics 5-10
Transmitter Disassembly 5-12
Process Sensor Body Removal 5-13
Reassembly Procedure 5-15
Backup Ring and O-ring Installation 5-16
Optional Plug-in Meters 5-18

SECTION 6 Retrofitting the Rosemount 1151 Transmitter

Overview 6-1
Safety Messages 6-1
Warnings 6-1
Retrofitting Overview 6-2
Removing the Analog Electronics Assembly 6-2
Installing the Smart Retrofit Kit 6-10
Characterization 6-12
Before Characterizing the Transmitter 6-13
Characterizing with a HART Communicator 6-14

APPENDIX A
Reference Information

Performance Specifications A-1
Functional Specifications A-3
Physical Specifications A-8
Electrical Connections A-8
Process Connections A-8
1151 Process Wetted Parts A-8
1151LT Process Wetted Parts A-9
Non-wetted Materials A-9
Dimensional Drawings A-11
Ordering Information A-16
1151 Parts List A-22
1151LT Parts List A-30
Display Specifications A-34

APPENDIX B
Product Certifications

Approved Manufacturing Locations B-1
European Directive Information B-1
Hazardous Locations Certifications B-2
North American Certifications B-2
European Certifications B-2
Australian Certifications B-3
Combination Certifications B-4
Approval Drawings B-4

APPENDIX C

Glossary . . . . . C-1 to C-2

Index

Index . . . . . Index-1 to Index-2

Section 1 Introduction

Using This Manual . . . . . page 1-1
Models Covered . . . . . page 1-2

USING THIS MANUAL

This manual provides information on installation, operation, and maintenance of Rosemount 1151 Pressure Transmitters. This manual is organized into the following sections:

Section 2–Installation

This section provides mechanical and electrical installation instructions.

Section 3–Configuration

This section contains commissioning, output check, basic setup, LCD Display configuration, detailed setup, diagnostic and services, and advanced functions.

Section 4–Operation and Maintenance

This section contains calibration and trim procedures.

Section 5–Troubleshooting

This section provides troubleshooting techniques for the most common operating problems.

Section 6–Retrofitting the Rosemount 1151 Transmitter

This section describes how the Rosemount Smart Retrofit Kit can be used to retrofit a Rosemount 1151AP, DP, GP, HP, or LT transmitter with 4-20 mA linear or square root output.

Appendix A–Reference Information

This appendix supplies reference and specification data, as well as ordering information and spare parts tables.

Appendix B–Product Certifications

This appendix contains European directive information, Hazardous Location Certifications, and approval drawings.

Appendix C–Glossary

This section provides brief definitions of the terms used in this manual.

Index

This section provides a comprehensive index.

MODELS COVERED

This manual provides basic installation, commissioning, and troubleshooting information for the following Rosemount 1151 Pressure Transmitters:

Rosemount 1151DP—Differential Pressure Transmitter

Measures differential pressure up to 1,000 psi (6895 kPa).

Rosemount 1151HP—Differential Pressure Transmitter for High Line Pressures

Provides high line pressure up to 300 psi (2068 kPa).

Rosemount 1151GP—Gage Pressure Transmitter

Measures gage pressure up to 6,000 psi (41369 kPa).

Rosemount 1151AP—Absolute Pressure Transmitter

Measures absolute pressure up to 1,000 psi (6895 kPa).

Rosemount 1151LT—Flange-Mounted Liquid Level Transmitter

Provides precise level and specific gravity measurements up to 2,770 inH2O (690 kPa) for a wide variety of tank configurations.

Section 2 Installation

Overview . . . . . **page 2-1**
Safety Messages . . . . . **page 2-2**
General Considerations . . . . . **page 2-4**
Mechanical Considerations . . . . . **page 2-6**
Mounting Considerations . . . . . **page 2-8**
Electrical Considerations . . . . . **page 2-14**
Liquid Level Measurement . . . . . **page 2-18**
Installation Options . . . . . **page 2-21**

OVERVIEW

This section is designed to guide you through a successful Rosemount 1151 installation. This section contains an installation flow chart; safety messages; general, mechanical, mounting, and electrical installation information; as well as installation guidance for optional parts. Dimensional drawings for each Rosemount 1151 variation and mounting configuration are included.

Figure 2-1. Rosemount 1151 Installation Flowchart.

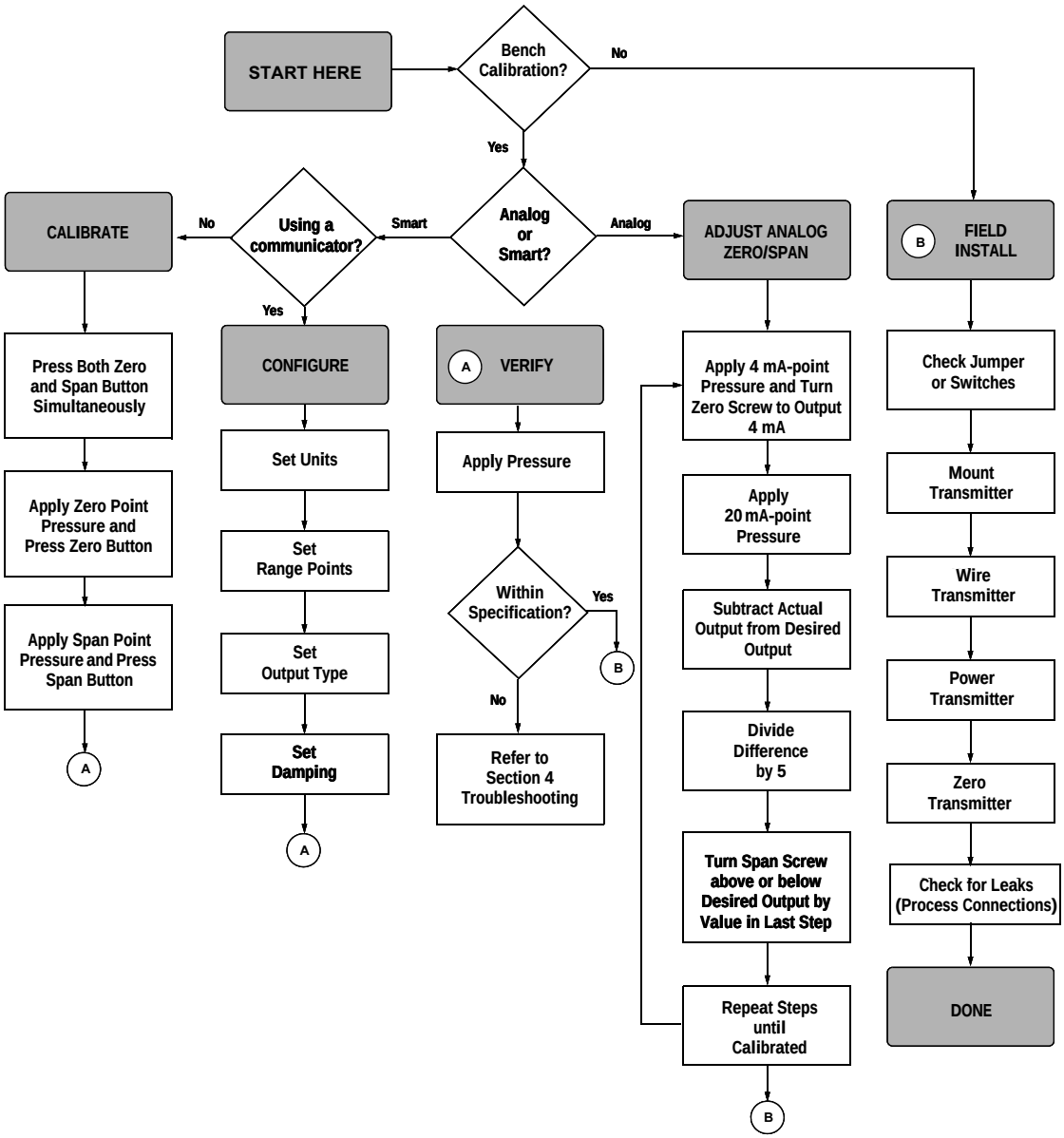

SAFETY MESSAGES

Warnings (⚠)

Procedures and instructions in this section that raise potential safety issues are indicated by a warning symbol (⚠). Refer to the following warning messages before performing an operation preceded by this symbol.

⚠WARNING

- Explosions can result in death or serious injury. Before connecting a communicator in an explosive atmosphere, make sure the instruments in the loop are installed in accordance with intrinsically safe or nonincendive field wiring practice.
- Process leaks can cause death or serious injury. Install and tighten all four flange bolts before applying pressure, or process leakage may result. Attempting to remove the flange bolts while the transmitter is in service may cause process fluid leaks.
- All explosion-proof, flameproof, and dust-ignition-proof installations require insertion of conduit plugs in all unused openings with a minimum of 40 ft-lb (54 N-m) of torque. This will maintain five full threads of engagement.
- When adding a meter option to a Rosemount 1151 with an Option Code R1 terminal block, make sure to change to cemented meter covers with a glass window. Make sure a sticker is located inside the cover that indicates a “cemented cover.” This cover is required to maintain explosion-proof approval.
- Explosions can cause death or serious injury. Do not remove the instrument cover in explosive atmospheres when the circuit is alive.
- Explosions can cause death or serious injury. To meet hazardous location requirements, any transmitter with a tag specifying Option Codes I5, I1, N1, I8, I7, or N7 requires an intrinsically safe analog display (Part Nos. 01151-2614-0004 through 0009) or an LCD Display (Part Nos. 01151-1300-1000,01151-1300-1001).

⚠WARNING

Failure to install proper flange adapter O-rings may cause process leaks, which can result in death or serious injury. The two flange adapters are distinguished by unique O-ring grooves. Only use the O-ring that is designed for its specific flange adapter, as shown below.

ROSEMOUNT 3051S / 3051 / 2051 / 3001 / 3095 / 2024

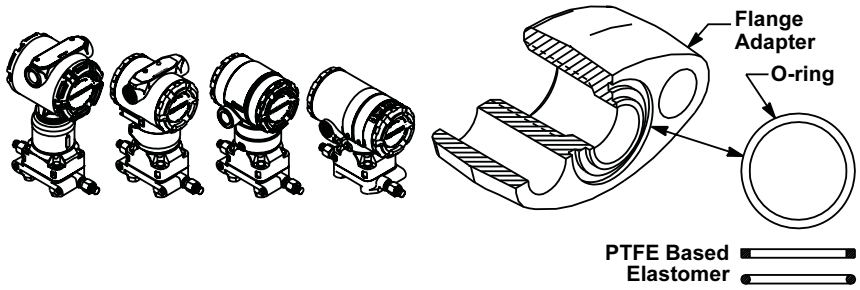

ROSEMOUNT 1151

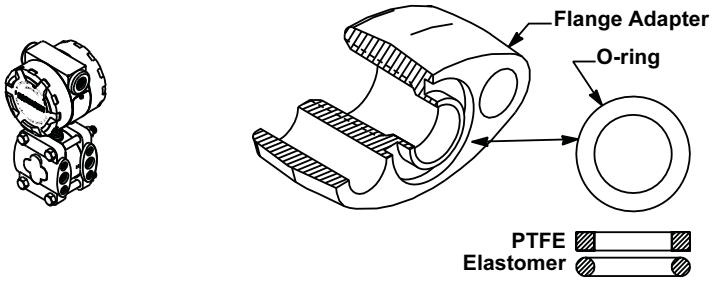

GENERAL CONSIDERATIONS

The accuracy of a flow, pressure, or level measurement depends on proper installation of the transmitter and impulse piping. The piping between the process and transmitter must accurately transmit process pressure to the transmitter. Mount the transmitter close to the process and use a minimum of piping to achieve best accuracy. However, keep in mind the need for easy access, safety of personnel, practical field calibration, and a suitable transmitter environment.

In general, install the transmitter so as to minimize vibration, shock, and temperature fluctuations.

Installations in food, beverage, and pharmaceutical processes may require sanitary seals and fittings. Regulations may dictate special installation requirements to maintain sanitation and cleanability. See www.emersonprocess.com for more information about sanitary pressure instruments.

Transmitter Access Requirements

When choosing an installation location and position, take into account the need for access to the transmitter.

Process Flange Orientation

Orient the process flanges to enable process connections to be made. For safety reasons, orient the drain/vent valves so that process fluid is directed down and away from technicians when the valves are used. This can be accomplished by pointing the hole in the outside valve body downward and away.

Housing Rotation

⚠CAUTION

Do not rotate the transmitter housing more than 90 degrees without disconnecting the header board. Exceeding 90 degrees rotation will damage the internal sensor module wiring.

The electronics housing is designed to be rotated up to 90 degrees in order to provide field access to the two housing compartments. (If rotating the housing more than 90 degrees is necessary, follow the transmitter disassembly procedures in Section 5: Troubleshooting.) To rotate the housing up to 90 degrees, loosen the housing lock nut and turn the housing not more than 90 degrees.

NOTE
Seal module threads with Loctite® 222 before retightening housing lock nut (see **Connecting the Electrical Housing to the Sensor on page 5-7**.)

Terminal Side of Electronics Housing

The terminal side is marked on the nameplate located on the side of the transmitter. Mount the transmitter so that the terminal side of the housing is accessible by providing:

- A 3/4-inch clearance for cover removal with no meter
- A 3-inch clearance for cover removal with a meter installed

If practical, provide approximately 6 inches clearance so that a meter may be installed later.

Circuit Side of Electronics Housing

The circuit compartment should not routinely need to be opened when the unit is in service. However, provide 6 inches clearance, if possible, to allow access to the integral zero and span buttons or for on-site maintenance. The circuit side of the housing is marked on the nameplate located on the side of the transmitter.

Exterior of Electronics Housing

The Rosemount 1151 Smart Pressure Transmitter uses the same housing as the Rosemount 1151 Analog. For this reason, integral span and zero screws—non-functional on the Rosemount 1151 Smart Pressure Transmitter—are located under the nameplate on the side of the transmitter.

MECHANICAL CONSIDERATIONS

Dimensional Drawings

Figure 2-2. Rosemount 1151AP, DP, GP, and HP Dimensional Drawings.

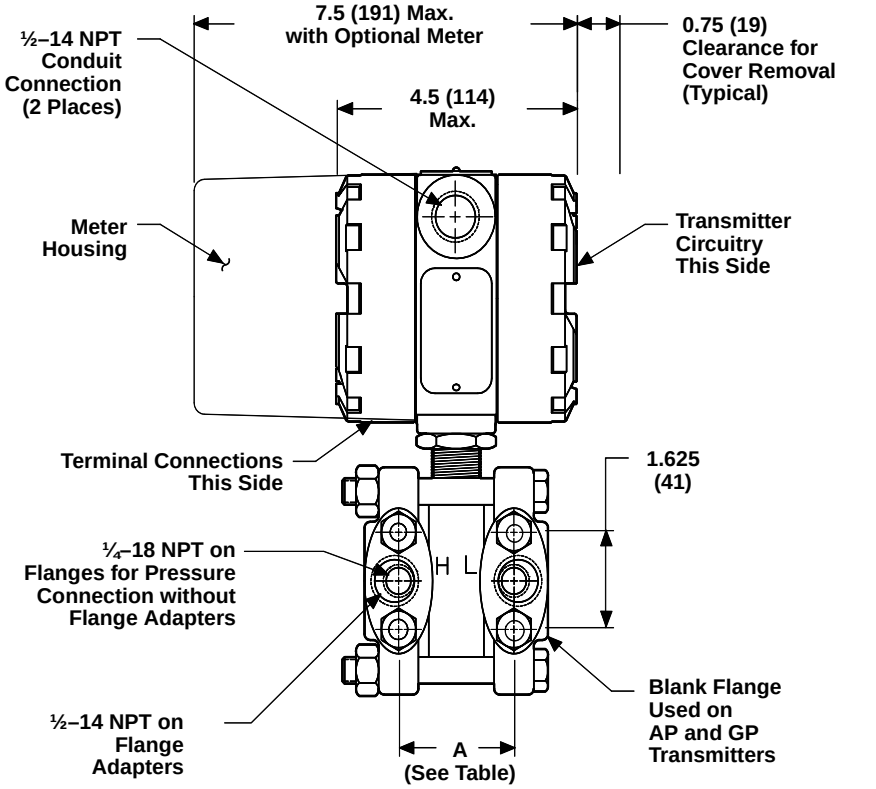

	Flange Distance "A" Center to Center	
Range	inches	mm
3, 4, 5	2.125	54
6, 7	2.188	56
8	2.250	57
9	2.281	58
0	2.328	59

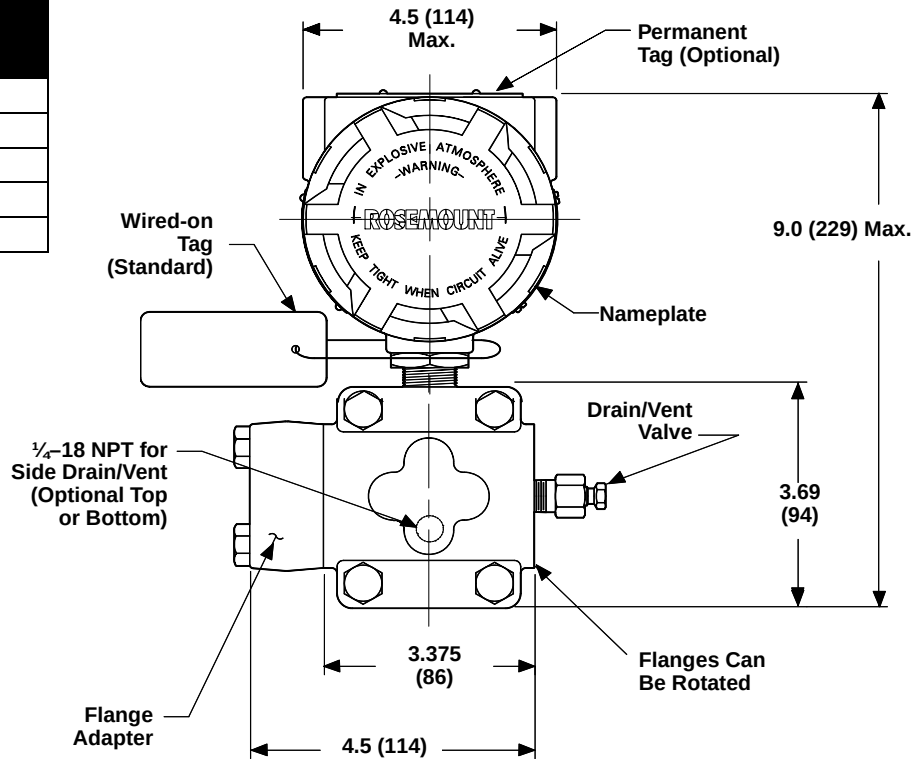

NOTE
Dimensions are in inches (millimeters).

Figure 2-3. Rosemount 1151LT Dimensional Drawing.

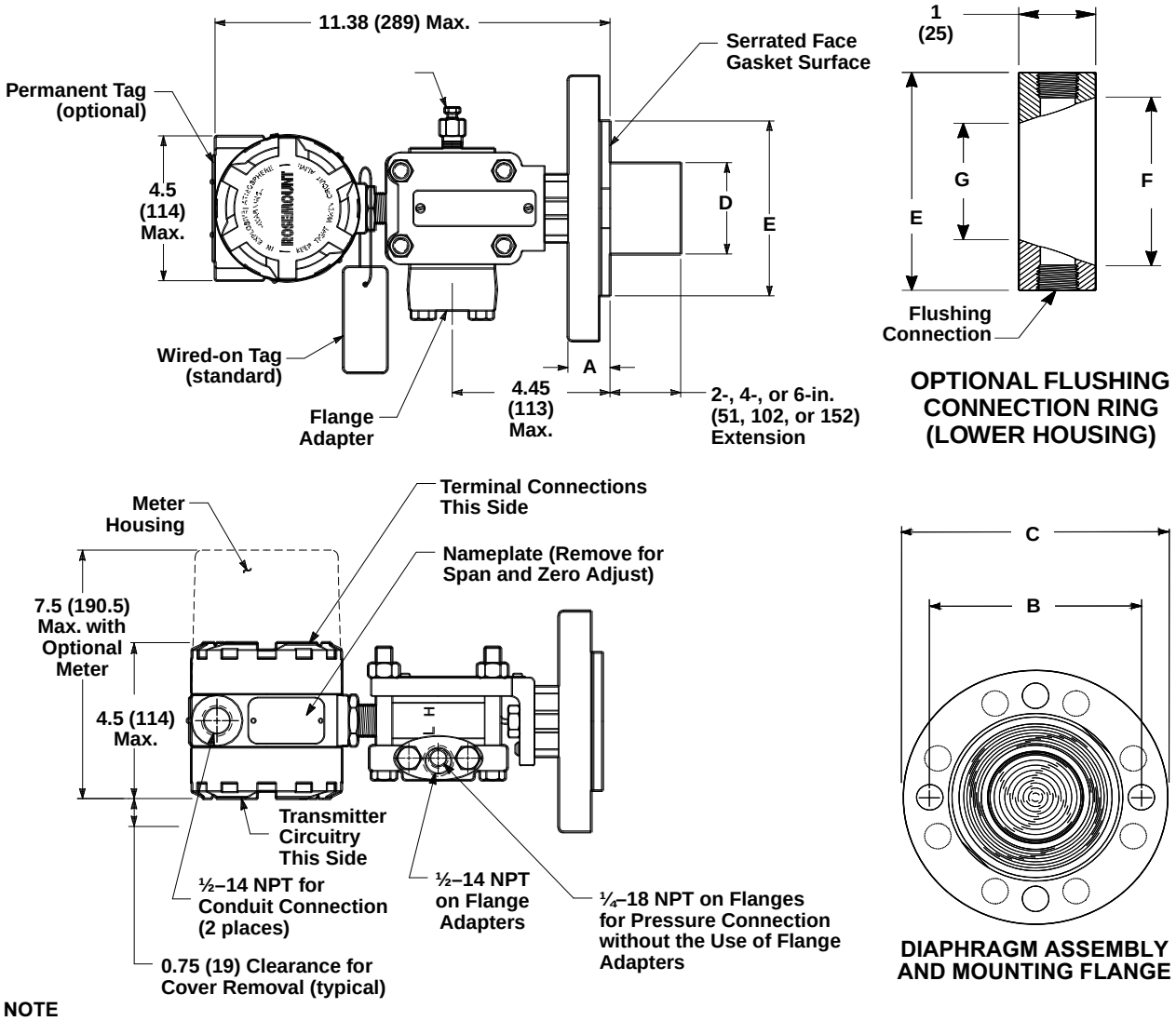

NOTE
Dimensions are in inches (millimeters).

Table 2-1. Rosemount 1151LT Dimensional Specifications

Class	Pipe Size	Flange Thickness A	Bolt Circle Diameter B	Outside Diameter C	No. of Bolts	Bolt Hole Diameter	Exten. Diam. D (1)	O.D. Gask. Surf. E	Lower Housing Xmtr Side F	Lower Housing Proc. Side G
ANSI 150	2 (51) 3 (76) 4 (102)	1.12 (28) 1.31 (33) 1.31 (33)	4.75 (121) 6.0 (152) 7.5 (190)	6.0 (152) 7.5 (190) 9.0 (228)	4 4 8	0.75 (19) 0.75 (19) 0.75 (19)	NA 2.58 (65) 3.5 (89)	3.75 (95) 5.0 (127) 6.81 (173)	2.9 (74) 3.11 (79) 4.06 (103)	2.16 (55) 3.11 (79) 4.06 (103)
ANSI 300	2 (51) 3 (76) 4 (102)	1.25 (32) 1.50 (38) 1.62 (41)	5.0 (127) 6.62 (168) 7.88 (200)	6.5 (165) 8.25 (209) 10.0 (254)	8 8 8	0.75 (19) 0.88 (22) 0.88 (22)	NA 2.58 (65) 3.5 (89)	3.75 (95) 5.0 (127) 6.81 (173)	2.9 (74) 3.11 (79) 4.06 (103)	2.16 (55) 3.11 (79) 4.06 (103)
ANSI 600	2 (51) 3 (76)	1.12 (28) 1.37 (35)	5.0 (127) 6.62 (168)	6.5 (165) 6.62 (168)	8 8	0.75 (19) 0.88 (22)	NA 2.58 (65)	3.75 (95) 5.0 (127)	2.9 (74) 3.11 (79)	2.16 (55) 3.11 (79)
DIN PN10-40	DN 50	26 mm	125 mm	165 mm	4	18 mm	NA	95 mm	74 mm	55 mm
DIN PN 25/40	DN 80 DN 100	30 mm 30 mm	160 mm 190 mm	200 mm 235 mm	8 8	18 mm 22 mm	65 mm 89 mm	127 mm 173 mm	79 mm 103 mm	79 mm 103 mm
DIN PN 10/16	DN 100	26 mm	180 mm	220 mm	8	18 mm	89 mm	173 mm	103 mm	103 mm

(1) Tolerances are 0.040 (1.02), –0.020 (0.51).

MOUNTING CONSIDERATIONS

The Rosemount 1151 Pressure Transmitter weighs 12 lb. (5.4 kg) without a meter and 15 lb. (6.8 kg) with a meter. This weight must be securely supported. The transmitter is calibrated in an upright position at the factory. If this orientation is changed during mounting, the zero point will shift by an amount equivalent to the liquid head caused by the mounting position. For Smart Transmitters, follow “Because a zero trim must be zero-based, it generally should not be used with Rosemount 1151 Smart Absolute Pressure Transmitters. Absolute pressure transmitters reference absolute zero. To correct mounting position effects on a Rosemount 1151 Smart Absolute Pressure Transmitter, perform a low trim within the full sensor trim function. The low trim function provides a “zero” correction similar to the zero trim function but it does not require the input to be zero based.” on page 4-5 to correct this shift. For Analog Transmitters, follow “Zero and Span Adjustment” on page 4-15 to correct this shift.

NOTE
Do not plug the low side with a solid plug. Plugging the low side will cause an output shift.

Mounting Requirements (for Steam, Liquid, Gas)

The following information applies to steam, liquid, and gas installations.

Taps

Tap placement is dependent on the type of process being measured, and on whether the transmitter has side drain/vent valves:

- For liquid flow measurement, place taps to the side of the line to prevent sediment deposits, and mount the transmitter beside or below these taps so gases can vent into the process line and away from the transmitter.
- For gas flow measurement, place taps in the top or side of the line and mount the transmitter beside or above the taps so liquid will drain away from the transmitter.
- For steam flow measurement, place taps to the side of the line with the transmitter mounted below them to ensure that the impulse piping stays filled with condensate.
- For transmitters with side drain/vent valves, place taps to the side of the line.

See Figure 2-4 for a diagram of these arrangements.

Figure 2-4. Steam, Liquid, and Gas Service Installation Diagrams.

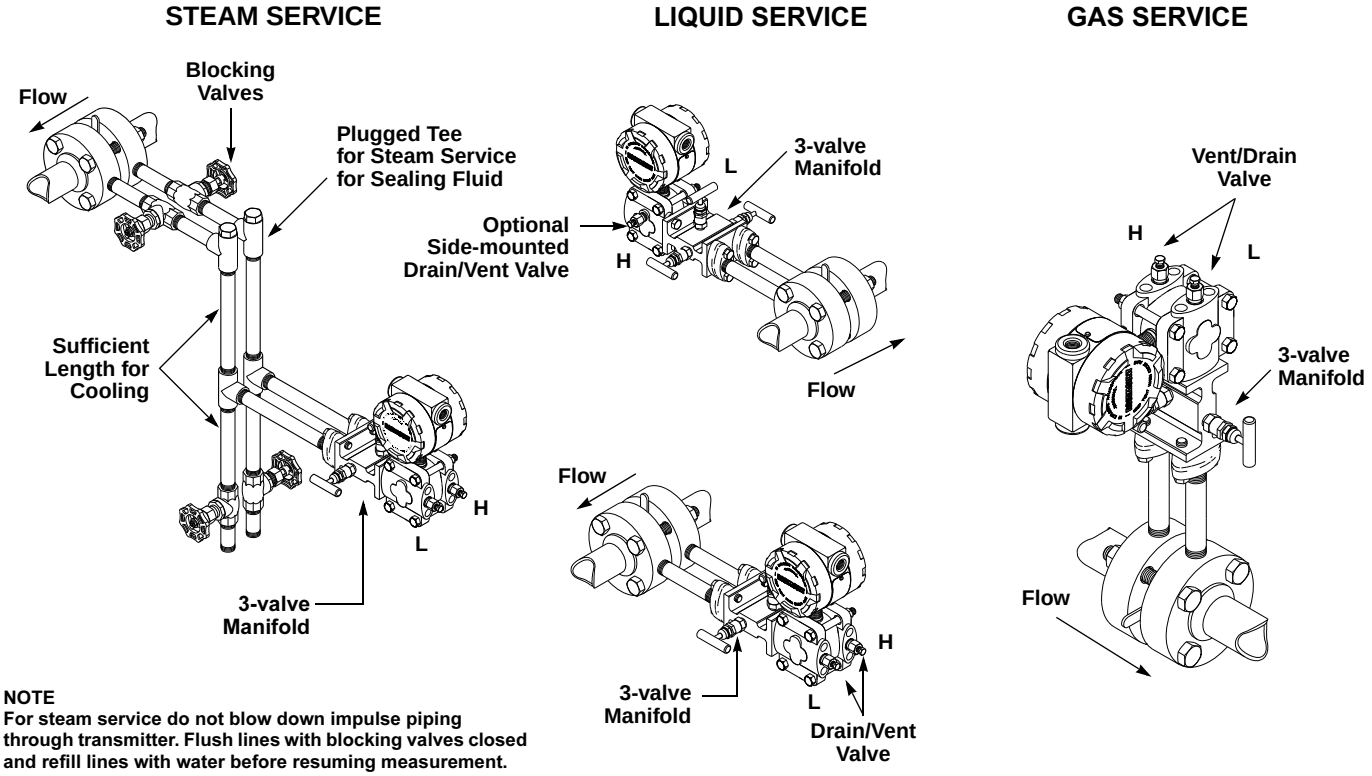

NOTE
For steam service do not blow down impulse piping through transmitter. Flush lines with blocking valves closed and refill lines with water before resuming measurement.

Drain/Vent Valves

Drain/vent valve orientation is also dependent on the process being measured:

- For liquid service, mount the side drain/vent valve upward to allow the gases to vent.
- For gas service, mount the drain/vent valve down to allow any accumulated liquid to drain.

To change the drain/vent valve orientation from top to bottom, rotate the process flange 180 degrees.

Impulse Piping

The piping between the process and the transmitter must accurately transfer the pressure in order to obtain accurate measurements. In this pressure transfer, there are five possible sources of error:

- Leaks
- Friction loss (particularly if purging is used)
- Trapped gas in a liquid line
- Liquid in a gas line
- Temperature-induced or other density variation between the legs

The best location for the transmitter in relation to the process pipe depends on the process itself. Consider the following general guidelines in determining transmitter location and placement of impulse piping:

- Keep impulse piping as short as possible.
- Slope the impulse piping at least 1 inch per foot (8 centimeters per meter) upward from the transmitter toward the process connection for liquid.
- Slope the impulse piping at least 1 inch per foot (8 centimeters per meter) downward from the transmitter toward the process connection for gas.
- Avoid high points in liquid lines and low points in gas lines.
- Make sure both impulse legs are the same temperature.
- Use impulse piping large enough to avoid friction effects and prevent blockage.
- Vent all gas from liquid piping legs.
- For steam service, fill impulse piping with water to prevent contact of live steam with the transmitter.

⚠CAUTION

Steam or other elevated temperature processes can cause damage to the sensor. Do not allow the temperature inside the process flanges to exceed the transmitter limit of 220 °F (104 °C).

- When using a sealing fluid, fill both piping legs to the same level.
- When purging is necessary, make the purge connection close to the process taps and purge through equal lengths of the same size pipe. Avoid purging through the transmitter.
- Keep corrosive or hot process material out of direct contact with the sensor module and flanges.
- Prevent sediment deposits in the impulse piping.
- Keep the liquid head balanced on both legs of the impulse piping.

Process Connections

⚠ **Flange Adaptors:**

Rosemount 1151AP, DP, GP, and HP process connections on the transmitter flanges are 1/4–18 NPT. Flange adapters are available with standard 1/2–14 NPT Class 2 connections. The flange adapters allow users to disconnect from the process by removing the flange adapter bolts. Use plant-approved lubricant or sealant when making the process connections. Figure 2-2 shows the distance between pressure connections. This distance may be varied ±1/8 in. (3.2 mm) by rotating one or both of the flange adapters.

On open vessels, the low-side process flange is open to atmosphere and should be mounted with the threaded hole pointed down. On closed vessels, this connection is used for the dry or wet leg.

High-pressure-side process connections for the Rosemount 1151LT Transmitter are offered with 2-, 3-, or 4-in., Class 150, 300, or 600 flanges; DN 50 (PN 10-40), DN 80 (PN 25/40), or DN 100 (PN 10/16, 25/40). Low-pressure-side process connections for the Rosemount 1151LT Transmitter are offered with ¼–18 NPT on the flange, and ½–14 NPT on the adapter.

O-rings:

The two styles of Rosemount flange adapters (Rosemount 1151 and Rosemount 3051/2024/3001/3095/2051) each require a unique O-ring (see Figure 2-5). Use only the O-ring designed for the corresponding flange adaptor.

Figure 2-5. O-Rings.

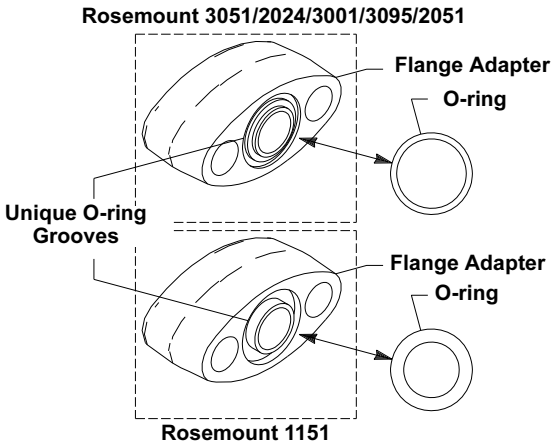

⚠ When compressed, PTFE O-rings tend to “cold flow,” which aids in their sealing capabilities.

NOTE
PTFE O-rings should be replaced if the flange adapter is removed.

Tightening the Seal:

To ensure a tight seal on the flange adapters or a three-valve manifold, first finger-tighten both bolts, then wrench-tighten the first bolt to approximately 29 ft.-lbs (39 N-m). Wrench-tighten the second bolt to approximately 29 ft.-lbs (39 N-m).

Mounting Brackets

Optional mounting brackets permit mounting the transmitter to a wall, a panel, or a 2-inch horizontal or vertical pipe. Figure 2-6 illustrates some typical configurations these mounting brackets.

Table 2-2. Mounting Brackets

	Mounting		Material			
Option Code	Pipe Mount	Panel Mount	CS Bracket	SST Bracket	CS Bolts	SST Bolts
B1	X		X		X	
B3		X	X		X	
B4	X		X			X
B6		X	X			X
B7	X			X		X
B9		X		X		X

Figure 2-6. Mounting Bracket Option Codes B1, B4, and B7.

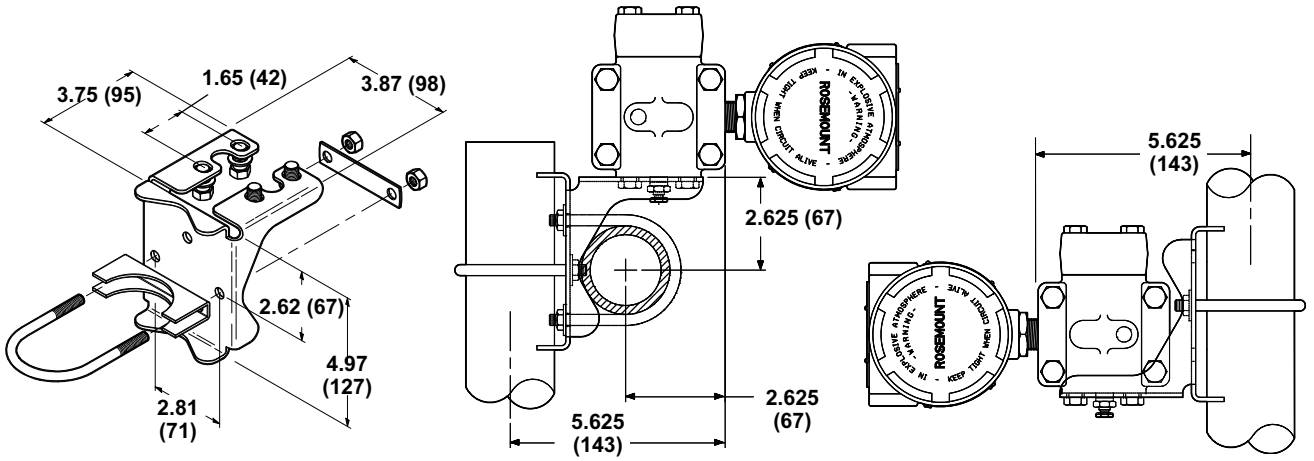

Figure 2-7. Panel Mounting Bracket Option Codes B2, and B5

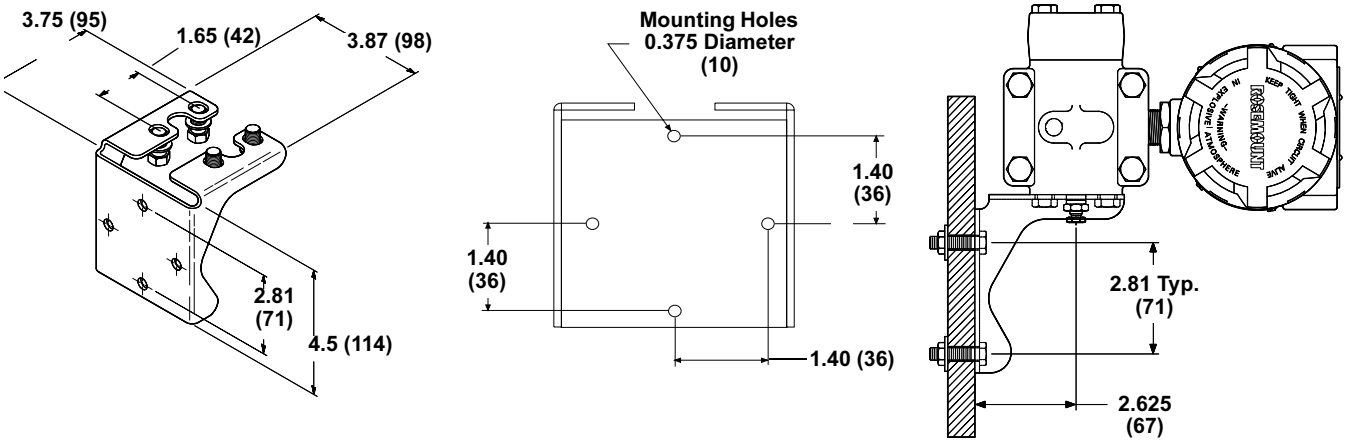

Figure 2-8. Flat Mounting Bracket Option Codes B3, B6, and B9

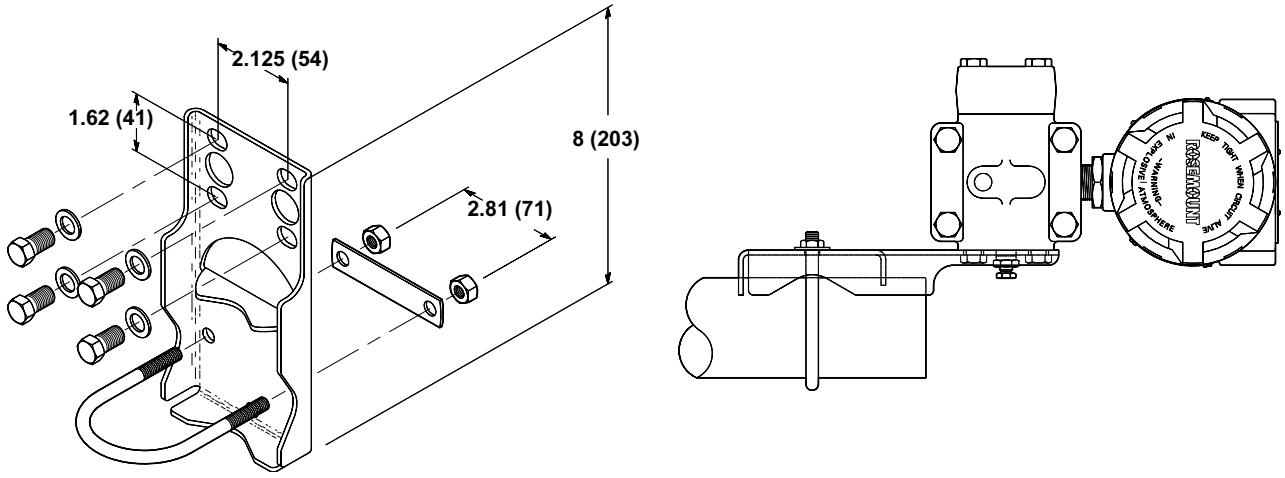

NOTE
Dimensions are in inches (millimeters).

ELECTRICAL CONSIDERATIONS

NOTE
Make sure all electrical installation is in accordance with national and local code requirements.

Power Supply

The DC power supply should provide power with less than 2% ripple. The total load is the sum of the resistance of the signal leads and the load resistance of the controller, indicator, and related pieces. The resistance of intrinsic safety barriers, if used, must be included. Figure 2-7 illustrates power supply load limitations for the transmitter.

Figure 2-7. Power Supply Load Limitations.

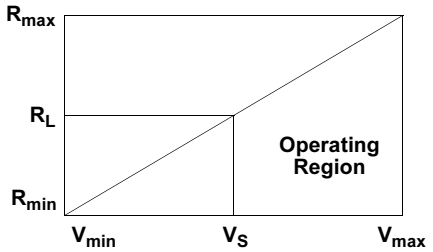

Code	V_{min}	V_{max}	R_{min}	R_{max}	R_L at Supply Voltage (V_s)
S(1)	12	45	0	1650	R_L = 43.5 (V_S–12)
E(2)	12	45	0	1650	R_L = 50 (V_S – 12)
G	30	85	0	1100	R_L= 20 (V_S – 30)
L	5	12	Low Power Minimum Load Impedance: 100 kΩ		
M	8	14			

(1) A minimum of 250 ohms is required for communication.
(2) For CSA Approvals (code E), V_{max} = 42.4 V dc.

Conduit Installation

⚠CAUTION

If all connections are not sealed, excess moisture accumulation can damage the transmitter. Make sure to mount the transmitter with the electrical housing positioned downward for drainage. To avoid moisture accumulation in the housing, install wiring with a drip loop, and ensure the bottom of the drip loop is mounted lower than the conduit connections or the transmitter housing.

Recommended conduit connections are shown in Figure 2-8.

Figure 2-8. Conduit Installation Diagrams.

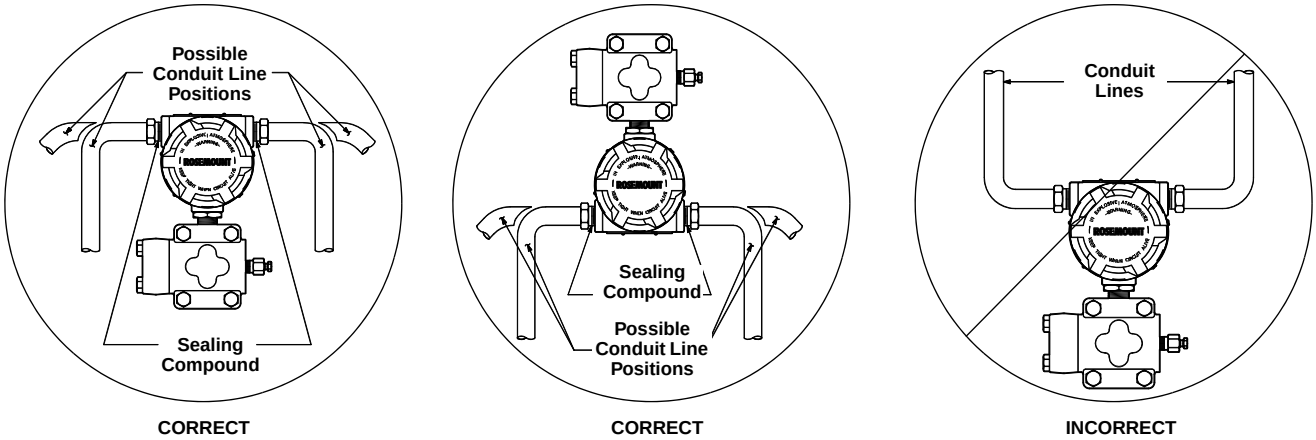

Wiring

⚠CAUTION

Do not connect the power signal wiring to the test terminals. Voltage may burn out the reverse-polarity protection diode in the test connection. If the test diode is destroyed, then the transmitter can still be operated without local indication by jumping the test terminals.

High voltage (greater than 50 V and greater than 0.005 amperes) can cause damage to the transmitter. Do not apply high voltage to the test terminals.

The signal terminals and test terminals are located in a compartment of the electronics housing that is separate from the transmitter electronics. The nameplate on the side of the transmitter indicates the locations of both of these compartments. The upper pair of terminals are the signal terminals and the lower pair are the test terminals. The test terminals have the same 4–20 mA output as the signal terminals and are only for use with the optional integral meter or for testing.

NOTE
An alternate location to connect an ammeter is on the set of terminals labeled “TEST.” Connect the positive lead of the ammeter to the positive test terminal, and the negative lead of the ammeter to the negative test terminal.

⚠ To make connections, remove the cover on the side marked “Terminal” on the nameplate. All power to the transmitter is supplied over the signal wiring. Connect the lead that originates at the positive side of the power supply to the terminal marked “+” and the lead that originates at the negative side of the power supply to the terminal marked “–”. No additional wiring is required.

Do not run signal wiring in conduit or open trays with power wiring or near heavy electrical equipment.

For improved performance against EMI/RFI effects, refer to “Terminal Blocks” on page 2-24 for information on transient protection terminal blocks.

Shielded cable should be used for best results in electrically noisy environments. Refer to “Grounding” on page 2-16 for more details.

NOTE
When conduit lines are used, signal wiring need not be shielded, but twisted pairs should be used for best results. Wiring must be 24 AWG or larger and not exceed 5,000 feet (1500 meters).

NOTE
A minimum loop resistance of 250 Ω is required to communicate with a hand-held HART-based communicator. With 250 Ω of loop resistance, the transmitter requires a minimum of 17 volts to output 20 mA. If a single power supply is used to power more than one Rosemount 1151 Smart transmitter, the power supply used, and circuitry common to the transmitters should not have more than 20 Ω of impedance at 1200 Hz.

Grounding

⚠ Use the following techniques to properly ground the transmitter signal wiring and case:

Signal Wiring

Do not run signal wiring in conduit or open trays with power wiring or near heavy electrical equipment. It is important that the instrument cable shield be:

- Trimmed close and insulated from touching the transmitter housing
- Connected to the next shield if cable is routed through a junction box
- Connected to a good earth ground at the power supply end

Signal wiring may be grounded at any one point on the signal loop or may be left ungrounded. The negative terminal of the power supply is a recommended grounding point.

Transmitter Case

The transmitter case must be grounded in accordance with national and local electrical codes. The most effective transmitter case grounding method is a direct internal connection to earth ground with minimal impedance. The transmitter case may also be grounded through the process or conduit connections.

Internal Ground Connection: Inside the field terminals side of the electronics housing is the internal ground connection screw. This screw is identified by a ground symbol: ⏚.

NOTE
Grounding the transmitter case via threaded conduit connection may not provide sufficient ground continuity.

NOTE
The transient protection terminal block (page 2-25) does not provide transient protection unless the transmitter case is properly grounded. Use the preceding guidelines to ground the transmitter case.
Do not run the transient protection ground wire with signal wiring as the ground wire may carry excessive current if a lightning strike occurs.

Grounding Effects

The capacitance sensing module requires alternating current to generate a capacitance signal. This alternating current is developed in an oscillator circuit with a frequency of approximately 32 kHz. This signal is capacitor-coupled to transmitter-case ground through the sensing module. Because of this coupling, a voltage may be imposed across the load, depending on the choice of grounding. See Figure 2-9.

Impressed voltage, which is seen as high frequency noise, will have no effect on most instruments. Computers with short sampling times in circuits will detect a significant noise signal, which should be filtered out by using a large capacitor (1 μF) or by using a 32 kHz LC filter across the load. Computers that are wired and grounded, as shown in Figure 2-9, are negligibly affected by this noise and do not need filtering.

Figure 2-9. Effects of Grounding on Accuracy for Fast Sample Computers.

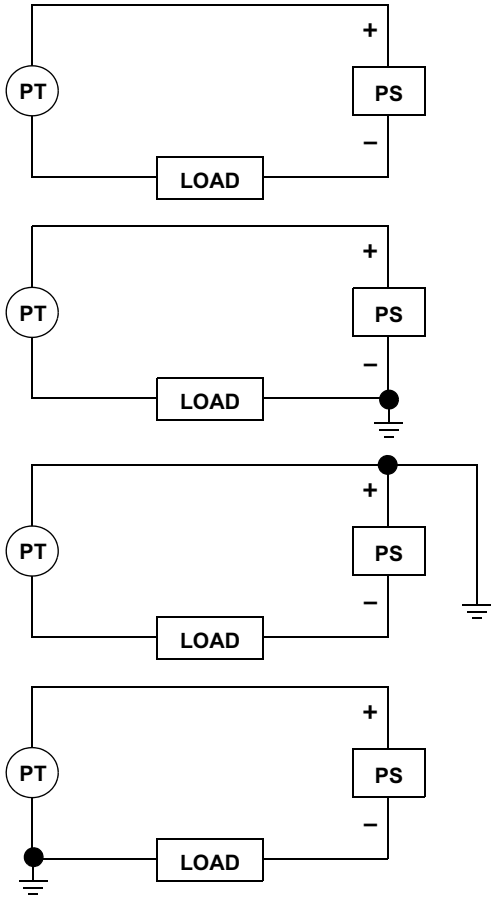

Ungrounded System

Impressed Voltage: 12 to 22 mV_{p-p}
32 kHz

Effect: 0.01% of span, max.

Ground Between Negative Side of Power Supply and Load

Impressed Voltage: 35 to 60 mVp-p
32 kHz

Effect: 0.03% of span, max.

Ground Between Positive Side of Transmitter and Power Supply

Impressed Voltage: 35 to 60 mVp-p
32 kHz

Effect: 0.03% of span, max.

Ground Between Negative Terminal of Transmitter and Load

Impressed Voltage: 500 to 600 mVp-p
32 kHz

Effect: 0.27% of span, max.

*The effect caused by the impressed voltage on a computer with a sampling time of 100 microseconds using a 2 to 10 volt signal.

Hazardous Locations Certifications

⚠ The Rosemount 1151 was designed with an explosion-proof housing and circuitry suitable for intrinsically safe and nonincendive operation. Factory Mutual explosion-proof certification is standard for the Rosemount 1151 Transmitter. Individual transmitters are clearly marked with a tag indicating the approvals they carry. Transmitters must be installed in accordance with all applicable codes and standards to maintain these certified ratings. Refer to “Hazardous Locations Certifications” on page B-2 for information on these approvals.

Environmental Requirements

Mount the transmitter in an environment that has minimal ambient temperature change. The transmitter electronics temperature operating limits are –40 to 185 °F (–40 to 85 °C). Refer to Section A: Reference Information that lists the sensing element operating limits. Mount the transmitter so that it is not susceptible to vibration and mechanical shock and does not have external contact with corrosive materials.

LIQUID LEVEL MEASUREMENT

Differential pressure transmitters used for liquid level applications measure hydrostatic pressure head. Liquid level and specific gravity of a liquid are factors in determining pressure head. This pressure is equal to the liquid height above the tap multiplied by the specific gravity of the liquid. Pressure head is independent of volume or vessel shape.

Open Vessels

A pressure transmitter mounted near a tank bottom measures the pressure of the liquid above.

Make a connection to the high pressure side of the transmitter, and vent the low pressure side to the atmosphere. Pressure head equals the liquid’s specific gravity multiplied by the liquid height above the tap.

Zero range suppression is required if the transmitter lies below the zero point of the desired level range. Figure 2-10 shows a liquid level measurement example.

Closed Vessels

Pressure above a liquid affects the pressure measured at the bottom of a closed vessel. The liquid specific gravity multiplied by the liquid height plus the vessel pressure equals the pressure at the bottom of the vessel.

To measure true level, the vessel pressure must be subtracted from the vessel bottom pressure. To do this, make a pressure tap at the top of the vessel and connect this to the low side of the transmitter. Vessel pressure is then equally applied to both the high and low sides of the transmitter. The resulting differential pressure is proportional to liquid height multiplied by the liquid specific gravity.

Dry Leg Condition

Low-side transmitter piping will remain empty if gas above the liquid does not condense. This is a dry leg condition. Range determination calculations are the same as those described for bottom-mounted transmitters in open vessels, as shown in Figure 2-10.

Figure 2-10. Liquid Level Measurement Example.

Let **X** equal the vertical distance between the minimum and maximum measurable levels (500 in.).
Let **Y** equal the vertical distance between the transmitter datum line and the minimum measurable level (100 in.).
Let **SG** equal the specific gravity of the fluid (0.9).
Let **h** equal the maximum head pressure to be measured in inches of water.
Let **e** equal head pressure produced by **Y** expressed in inches of water.
Let **Range** equal **e** to **e** + **h**.

Then h = (**X**)(**SG**)
= 500 x 0.9
= 450 inH_2O
e = (**Y**)(**SG**)
= 100 x 0.9
= 90 inH_2O
Range = 90 to 540 inH_2O

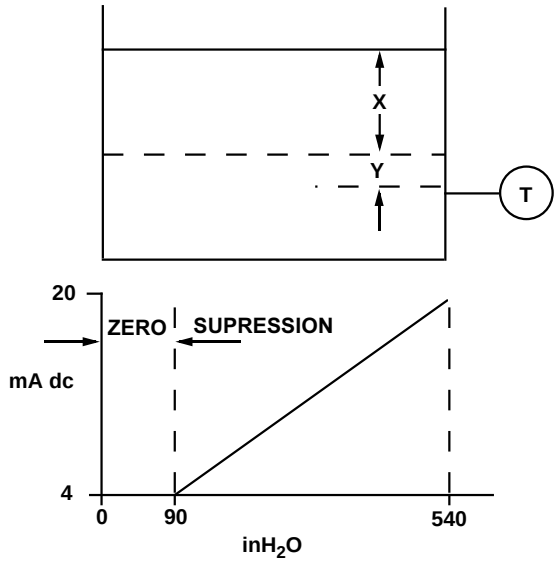

Wet Leg Condition

Condensation of the gas above the liquid slowly causes the low side of the transmitter piping to fill with liquid. The pipe is purposely filled with a convenient reference fluid to eliminate this potential error. This is a wet leg condition.

The reference fluid will exert a head pressure on the low side of the transmitter. Zero elevation of the range must then be made. See Figure 2-11.

Bubbler System in Open Vessel

A bubbler system that has a top-mounted pressure transmitter can be used in open vessels. This system consists of an air supply, pressure regulator, constant flow meter, pressure transmitter, and a tube that extends down into the vessel.

Bubble air through the tube at a constant flow rate. The pressure required to maintain flow equals the liquid's specific gravity multiplied by the vertical height of the liquid above the tube opening. Figure 2-11 shows a bubbler liquid level measurement example.

Figure 2-11. Bubbler Liquid Level Measurement Example.

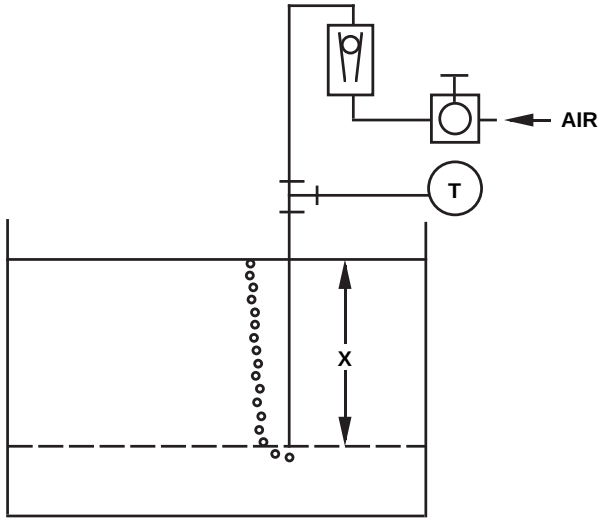

Let **X** equal the vertical distance between the minimum and maximum measurable levels (100 in.).
Let **SG** equal the specific gravity of the fluid (1.1).
Let **h** equal the maximum head pressure to be measured in inches of water.
Let **Range** equal **zero** to **h**.

Then **h** = **(X)(SG)**
= 100 x 1.1
= 110 inH_2O
Range = 0 to 110 inH_2O

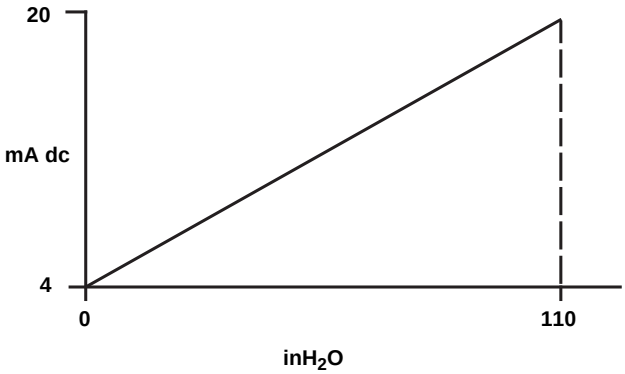

INSTALLATION OPTIONS

Analog Displays

⚠ Option Codes M1, M2, and M6 provide local indication of the transmitter output in a variety of scaling configurations with an indicator accuracy of ±2 percent. The plug-in mounting configuration allows for simple installation and removal of the analog displays. The meter scaling options are shown below.

- M1 Linear analog display, 0–100% scale
- M2 Square-root analog display, 0–100% flow scale
- M6 Square-root analog display, 0– 10√ scale

LCD Displays

The LCD Display Option Codes, M4 and M7–M9, provide a highly accurate local display of the process variable. A variety of scaling configurations are available and listed as follows:

- M4 Linear LCD Display, 0 to 100%
- M7 Special scale LCD Display (specify range, mode, and engineering units)
- M8 Square-root LCD Display, 0 to 100%
- M9 Square-root LCD Display, 0 to 10%

LCD Display Configuration

The Rosemount LCD Display has four digits and plugs directly into the Rosemount 1151 Smart Pressure Transmitter to provide a highly accurate digital display of the process variable. This manual explains the configuration and assembly of the LCD Display and includes the applicable functional, performance, and physical specifications. This meter adds no voltage drop in the 4–20 mA current loop when connected directly across the transmitter test terminals.

The LCD Display may be configured to meet specific requirements by using the left and right calibration buttons located on the meter face as shown in Figure 2-12. The LCD Display cannot be configured for reverse flow because the 20 mA value must always be greater than the 4 mA value. The analog bar graph is also shown in Figure 2-12. The 20-segment bar graph is factory calibrated and represents 4–20 mA directly.

Figure 2-12. LCD Display.

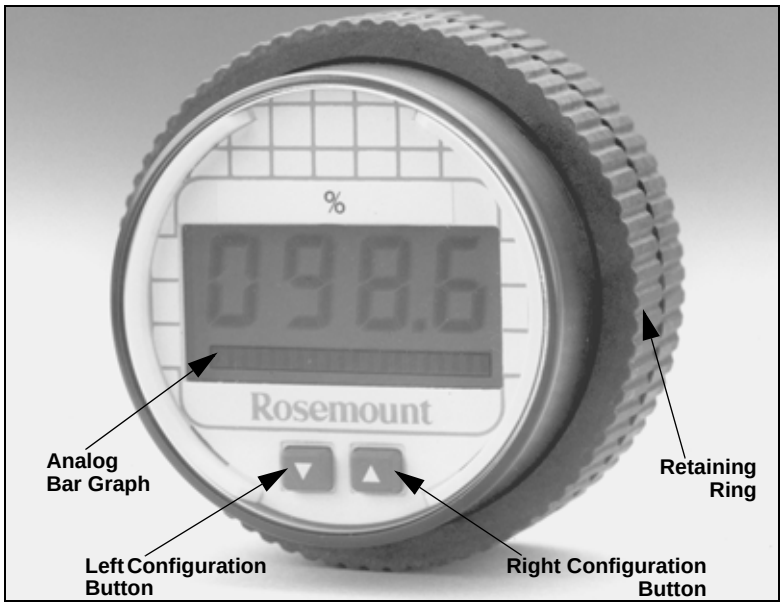

No calibration equipment is required to configure the LCD Display, but between 4 and 20 mA must be flowing through the loop. The actual value of the current is not significant. In addition, meter configuration does not affect the transmitter/loop current. Use the following meter configuration procedure to properly configure the LCD Display:

Remove the Cover

1. Unscrew the retaining ring shown in Figure 2-12 and lift the transparent cover off of the housing.

NOTE
The LCD Display time-out is approximately 16 seconds. If keys are not pressed within this period, the indicator reverts to reading the current signal.

Position the Decimal Point and Select the Meter Function

2. Press the left and right configuration buttons simultaneously and release them immediately.
3. To move the decimal point to the desired location, press the left configuration button.
4. To scroll through the mode options, press the right configuration button repeatedly until the desired mode is displayed.
   See Table 2-3.

Table 2-3. LCD Display Modes.

Options	Relationship between Input Signal and Digital Display
L in	Linear
L inF	Linear with five-second filter
Srt	Square root
SrtF	Square root with five-second filter
Square root function only relates to the digital display. The bar graph output remains linear with the current signal. Square root response The digital display will be proportional to the square root of the input current where 4 mA=0 and 20 mA=1.0, scaled per the calibration procedure. The transition point from linear to square root is at 25% of full scale flow. **Filter response** operates upon “present input” and “input received in the previous five second interval” in the following manner: Display = (0.75 × previous input) + (0.25 × present input) This relationship is maintained provided that the previous reading minus the present reading is less than 25% of full scale.	

Store the Information

5. Press both configuration buttons simultaneously for two seconds. The meter displays “----” for approximately 7.5 seconds while the information is being stored.

Set the Display Equivalent to a 4 mA Signal

6. Press the left button for two seconds.
7. To set the display numbers to a lower value, press the left configuration button, and to set the display numbers to a higher value, press the right configuration button. Set the numbers between –999 and 1000.
8. To store the information, press both configuration buttons simultaneously for two seconds.

Set the Display Equivalent to a 20 mA Signal

9. Press the right button for two seconds.
10. To set the display numbers to a lower value, press the left configuration button, and to set the display numbers to a higher value, press the right configuration button. Set the numbers between –999 and 9999. The sum of the 4 mA point and the span must not exceed 9999. The 20 mA value must be greater than the 4 mA value.
11. To store the information, press both configuration buttons simultaneously for two seconds. The LCD Display is now configured.

Replace the Cover

12. Make sure the rubber gasket is seated properly, replace the transparent cover, and replace the retaining ring.

LCD Display Assembly

Figure 2-13 shows the mounting hardware required to properly install the LCD Display on a transmitter or in the field signal indicator.

Figure 2-13. LCD Display
Exploded View.

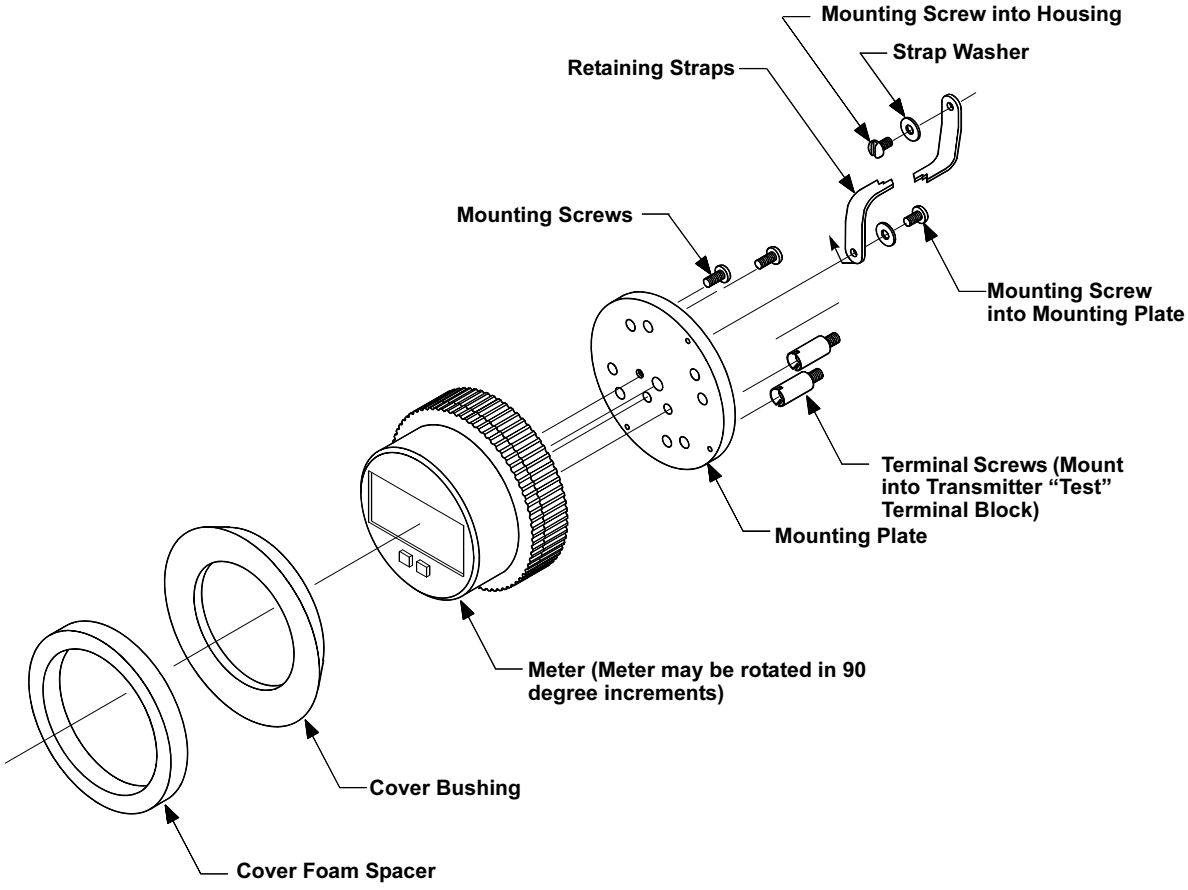

Terminal Blocks

The terminal block options can increase the Rosemount 1151 Pressure Transmitter's ability to withstand electrical transients induced by lightning, welding, heavy electrical equipment, or switch gears. The Rosemount 1151 Pressure Transmitter, with the integral transient protection option, meets the standard performance specifications as outlined in this product manual. In addition, the transient protection circuitry meets IEEE Std 587, Category B, and IEEE Std 472, Surge Withstand Capability.

Figure 2-14. Transient Protection and Filter Terminal Block (Code R1).

Transient Protection and Filter Terminal Block (Option Code R1)

Option Code R1 provides EMI/RFI protection and the benefit of integral transient protection. This terminal block can be ordered as a spare part to retrofit existing Rosemount 1151 Transmitters with Option Code R2.

Terminal Block Installation

Use a Phillips screwdriver, a flat-blade screwdriver and the following steps to install a retrofitable transient protection terminal block:

1. Turn off all power to the Rosemount 1151 on which the terminal block is being installed.
2. ⚠ Unscrew the transmitter terminal-side (indicated on the housing nameplate) cover (on the high side of the transmitter) exposing the standard terminal block.
3. Disconnect wiring to the terminal block.
4. Remove the single grounding screw and the two signal terminal screws, with terminal eyelet washers, from the standard terminal block.
5. Set the retrofitable transient protection terminal block into the housing, making sure the ground and signal terminals are properly aligned.
6. Insert the short mounting screws with washers in the mounting holes and tighten the terminal block to the transmitter.
7. Turn the transient protector grounding sleeve, located in the grounding hole, just enough to stabilize the unit on the transmitter. Overtightening the grounding sleeve will shift the terminal block out of alignment.
8. Insert the long grounding screw with the square washer into the grounding hole and tighten.
9. Connect the positive power supply wire to the transient protector terminal screw labeled “+ SIGNAL”, and the negative power supply wire to the terminal screw labeled “- SIGNAL.”
10. Attach the supplied label to the terminal side transmitter cover.
11. ⚠ Replace the terminal side cover on the transmitter.

Section 3 Configuration (Smart Only)

Overview . . . . . page 3-1
Safety Messages . . . . . page 3-1
Wiring Diagrams . . . . . page 3-3
Hart Communicator . . . . . page 3-5
Testing the Equipment and the Loop . . . . . page 3-6

OVERVIEW

This section contains information on commissioning and operating Rosemount 1151 Smart Pressure Transmitters. Instructions for setting transmitter switches (prior to installation) and explanations of software functions are provided in this section. Also, fast key sequences are listed for each software function.

SAFETY MESSAGES

Warnings (⚠)

Procedures and instructions in this section that raise potential safety issues are indicated by a warning symbol (⚠). Refer to the following warning messages before performing an operation preceded by this symbol.

⚠WARNING

Explosions can result in death or serious injury. Before connecting a communicator in an explosive atmosphere, make sure the instruments in the loop are installed in accordance with intrinsically safe or nonincendive field wiring practices.

Commissioning the Transmitter on the Bench

Commissioning consists of testing the transmitter, testing the loop, and verifying transmitter configuration data. Rosemount 1151 Smart Pressure Transmitters may be commissioned either before or after installation. The recommendation is to commission the transmitter on the bench before installation. This ensures that all transmitter components are in good working order and heightens familiarity with the device.

To avoid exposing the transmitter electronics to the plant environment after installation, set the failure mode and transmitter security switches during the commissioning stage on the bench.

Setting Hardware Switches

The Rosemount 1151 Smart Pressure Transmitter contains hardware switches that provide user-selectable operation of the failure mode and transmitter security. The switches are located on the electronics assembly just inside the electronics housing cover, as shown in Figure 3-1.

Figure 3-1.
Transmitter Switch Locations.

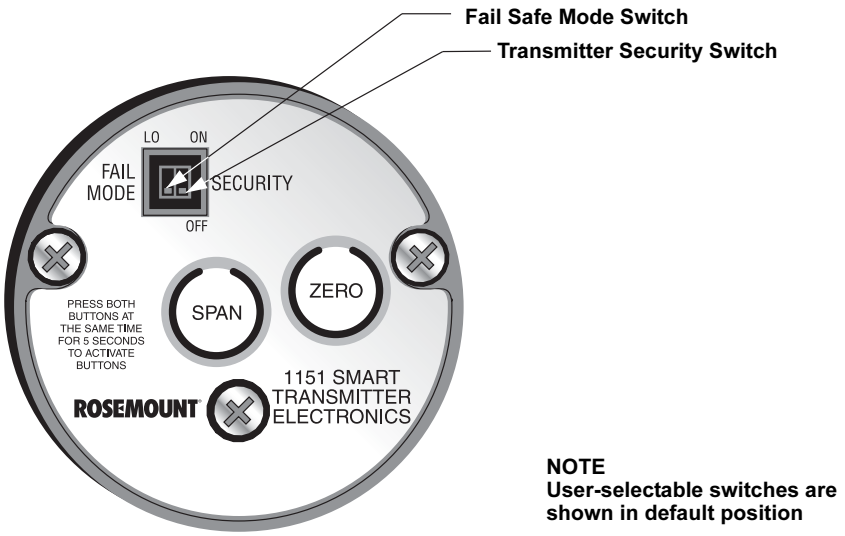

Failure Mode Alarm Switch

As part of its normal operation, the Rosemount 1151 Smart continuously monitors its own operation. This automatic diagnostic routine is a timed series of checks repeated continuously.

The electronics faceplate has HI and LO user-selectable failure mode settings, refer to Figure 3-1. If the diagnostic routine detects a failure in the transmitter in analog output, the transmitter either drives its output below 3.8 mA or above 21.0 mA, depending on the position of the failure mode alarm switch.

NOTE
With multidrop (digital) output, the analog output remains at 4 mA, even when a diagnostic failure is detected. This is true for both the HI and LO fail mode switch settings. A bit is enabled in the digital word to indicate a diagnostic failure.

Transmitter Security (Write-Protection Switch)

Once the transmitter has been configured, it may be desirable to protect the configuration data from changes. The electronics assembly is equipped with a switch labeled SECURITY. Figure 3-1 shows the switch location on the circuit side of the electronics housing. In the ON position, the switch prevents the accidental or deliberate change of configuration data. To enable the sending of configuration data, simply return the transmitter security switch to the OFF position.

NOTE
The transmitter security switch must be in the OFF position before configuration changes can be made to the transmitter configuration.

Commissioning with a HART-Based Communicator

Before putting the Rosemount 1151 Smart Pressure Transmitter into operation, commission the instrument using a HART-based communicator.

⚠ To commission on the bench, connect a 17 to 45 V dc power supply and a current meter. Make connections as shown in Figure 3-2. The power supplied to the transmitter should not drop below the transmitter lift-off voltage. If the transmitter is being configured when the power drops below the lift-off voltage, the configuration information may not be interpreted correctly by the transmitter.

NOTE
To enable communication, a resistance of at least 250 Ω must be present between the communicator loop connection and the power supply.

WIRING DIAGRAMS

Bench Hook-up

After the bench equipment is connected as shown in Figure 3-2, turn on the HART-based communicator. The communicator will search for a HART-compatible device and will indicate when the connection is made. If the connection is not made, the communicator will indicate that no device was found. If this occurs, refer to Section 5 Troubleshooting.

Figure 3-2. Bench Hook-up.

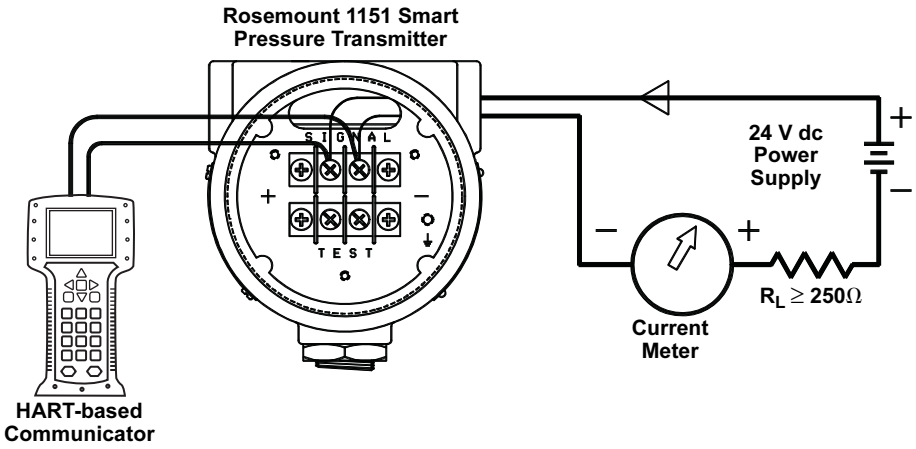

NOTE
An alternate location to connect an ammeter is on the set of terminals labeled “TEST.” Connect the positive lead of the ammeter to the positive test terminal, and the negative lead of the ammeter to the negative test terminal.

Field Hook-up

Figure 3-3. Rosemount 1151 Field Wiring Diagram.

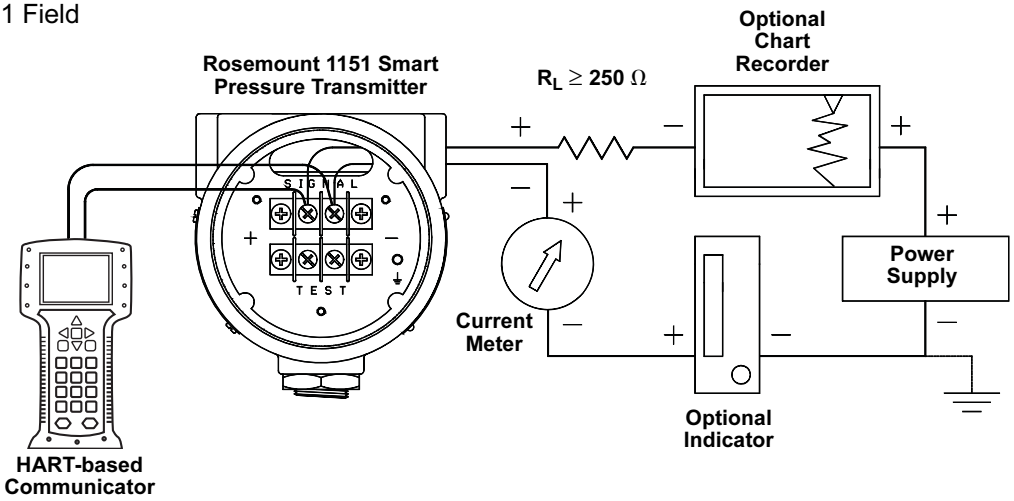

NOTE
Signal Loop may be grounded at any point or left ungrounded.

NOTE
A HART Interface may be connected at any termination point in the loop. Signal loop must have 250 ohms minimum load for communications.

HART COMMUNICATOR

Figure 3-4. HART Communicator Menu Tree

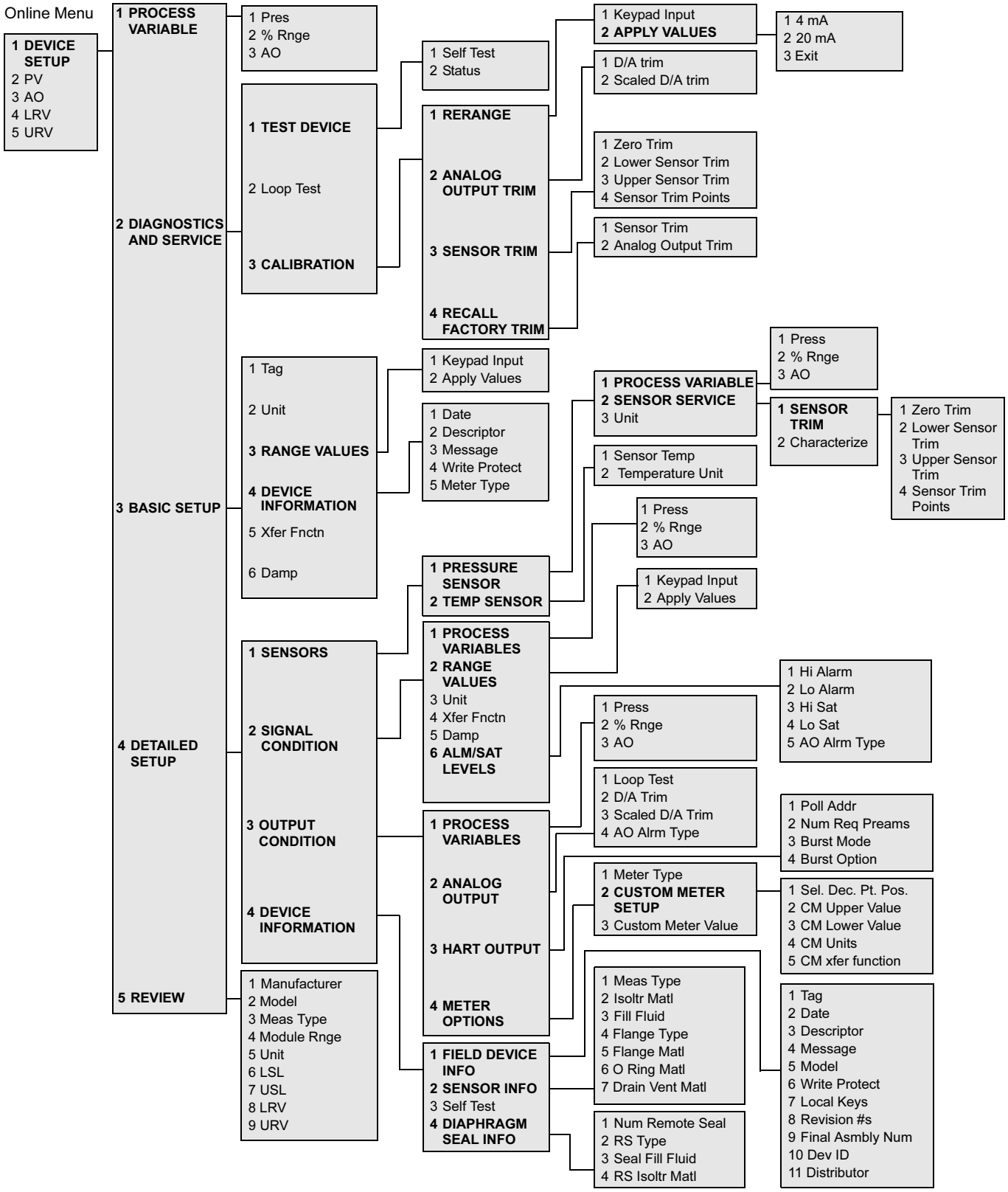

TESTING THE EQUIPMENT AND THE LOOP

Test functions verify that the transmitter, the communicator, and the loop are in good working order. Testing is recommended whenever component failure or a problem with loop performance is suspected.

Communicator Test

A communicator test is performed to ensure the communicator is working properly. The HART Communicator performs a self-test after being turned on. If a problem is detected, the communicator will list a diagnostic message.

Transmitter Test

HART Comm. Fast Key Sequence	1, 2, 1, 1

Although the Rosemount 1151 Smart Pressure Transmitter performs continuous self-diagnostics, a more extensive diagnostic routine can be initiated with the transmitter test function. The transmitter test routine can identify an electronics failure.

If the transmitter test detects a problem, messages to indicate the source of the problem are displayed.

Loop Test

HART Comm. Fast Key Sequence	1, 2, 2

The loop test allows verification of the output of the transmitter, the integrity of the loop, and the operation of any recorders or similar devices. If commissioning the transmitter on the bench, repeat this test after the transmitter has been installed in the field.

A reminder appears to set the loop to manual. Do so and proceed. The next display selects a discrete milliampere transmitter output level. To command the transmitter to output 4 mA, for example, select 4 mA. Check the current meter installed in the test loop to verify that it reads 4 mA. If so, end the loop test. If the output is not 4 mA, then the receiving meter is malfunctioning or the transmitter requires a digital trim as described on page 4-4.

Review Configuration Data

HART Comm. Fast Key Sequence	1, 5

Review of the transmitter factory configuration data is recommended.

Checking the Transmitter Output

HART Comm. Fast Key Sequence	2

Process variable readings can be obtained in engineering units and milliamperes. If the milliampere display does not agree with the actual loop reading given by a multimeter, a 4–20 mA trim is required.

The last step of start-up and commissioning is to check the transmitter output. Obtain process variable readings in engineering units and milliamperes. If this display does not agree with the actual loop reading given by a multimeter, a 4–20 mA trim is required (see page 4-10).

Range Points

HART Comm. Fast Key Sequence	1, 3, 3

The Rosemount 1151 Smart 4 and 20 mA range points can be viewed and edited with these fast key sequences.

Common Functions

The following tasks are a common part of a transmitter commissioning.

Setting the Loop to Manual

When preparing to send or request data that would disrupt the loop or change the output of the transmitter, set the loop to manual. The HART Communicator will prompt for this setting when necessary. Keep in mind that simply acknowledging this prompter does not set the loop to manual. It is only a reminder; the loop must be set to manual as a separate operation.

Change Non-Output Related Information

The Rosemount 1151 Smart contains several configuration parameters that do not directly affect the transmitter output. These parameters include:

- Date
- Descriptor
- Message
- Meter type

Configure the Analog Output Parameters

Setting Units

HART Comm. Fast Key Sequence	1, 3, 2

By setting the output units, a process can be monitored using the specified units. This is important if a plant uses units which differ from the default values. Output units can be selected from among 14 output options:

• inH_20	• inHg	• ftH_20
• mmH_20	• mmHg	• psi
• bar	• mbar	• g/cm^2
• kg/cm^2	• Pa	• kPa
• torr	• atm	

Reranging

One of the most common configuration tasks involves reranging the transmitter 4 and 20 mA points.

Reranging matches the transmitter range points with the applied process pressures. It can be performed three ways:

- using the communicator only
- using the communicator and a reference pressure
- using the integral zero and span buttons and a reference pressure

Reranging with a Communicator Only

HART Comm. Fast Key Sequence	1, 2, 3, 1, 1

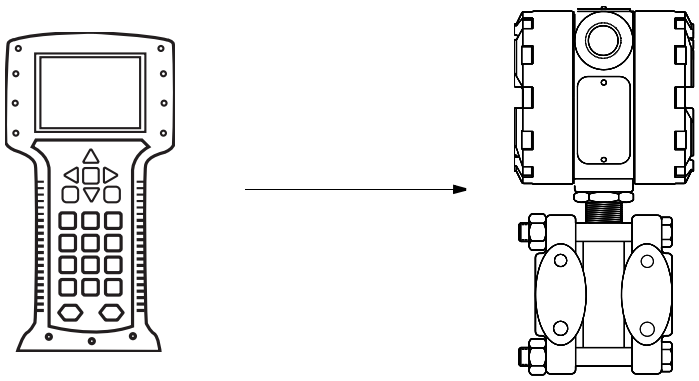

Reranging with only the communicator changes the analog 4 and 20 mA points independently without a pressure input.

This means that when you change either the 4 or 20 mA setting, you also change the span. For instance:

If the transmitter is ranged so that

4 mA = 0 inH_2O, and
20 mA = 100 inH_2O,

and you change the 4 mA setting to 50 inH_2O using the communicator only, the new settings are:
4 mA = 50 inH_2O, and
20 mA = 100 inH_2O.

Note that the span was also changed from 100 inH_2O to 50 inH_2O, while the 20 mA setpoint remained at 100 inH_2O.

To obtain reverse output, simply set the 4 mA point at a greater numerical value than the 20 mA point. Using the above example, setting the 4 mA point at 100 inH_2O and the 20 mA point at 0 inH_2O will result in reverse output.

NOTE
The 4 and 20 mA output is based on the transmitter's existing digital calibration. Before reranging with the communicator, make sure the transmitter is correctly interpreting the process variable input. To match the transmitter's reading in engineering units to plant standard, use the sensor trim function under “Digital Trim” in this section.

Reranging with a Communicator and a Reference Pressure

HART Comm. Fast Key Sequence	1, 2, 3, 1, 2

Reranging with a pressure input source and the communicator allows you to maintain the same analog span.

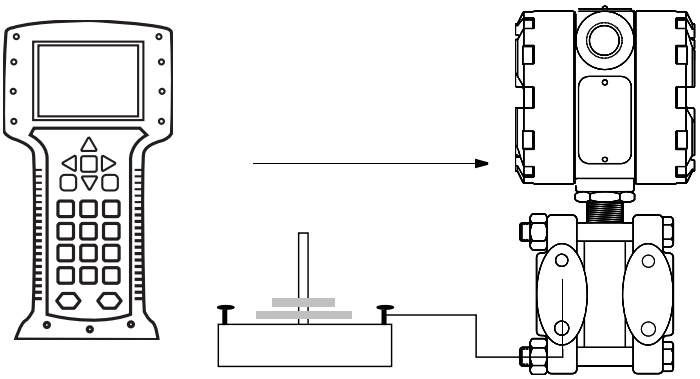

For instance, if the transmitter is ranged so that:

4 mA = 0 inH_2O, and
20 mA = 100 inH_2O,

and you then change the 4 mA setting to 50 inH_2O using the communicator (or buttons) and a pressure input, the new settings are:

4 mA = 50 inH_2O
20 mA = 150 inH_2O

The 100 inH_2O span is maintained.

To rerange with a reference pressure, apply the desired pressure input to represent the 4 or 20 mA point. Allow the variable reading to stabilize for approximately ten seconds. Press either the 4 mA or 20 mA to make this pressure value either point.

It is also important to note that when using a pressure source, the 4 and 20 mA setpoints are based on the transmitter's interpretation of the pressure input provided. It is possible that when a plant standard is input, the transmitter reads it as a slightly different value. Although the 4 and 20 mA setpoints will operate properly within these applied settings, the transmitter's digital output in engineering units may indicate a slightly different value.

The sensor trim function under "Digital Trim" can be used to match the transmitter's reading in engineering units to your plant standard, thereby eliminating any discrepancy.

NOTE
Reranging only the 4 mA or the 20 mA with a pressure input will maintain the initial span width.

NOTE
Do not rerange the transmitter such that the 4 and 20 mA range points—upper range value (URV) and lower range value (LRV)—are outside the high and low digital sensor trim values. To optimize performance, the digital trim span should be equal to or slightly greater than the 4–20 mA span.

Reranging Using the Integral Span and Zero Buttons and a Reference Pressure

It is also possible to rerange the transmitter using the span and zero buttons located within the circuit side of the electronics housing on the electronics faceplate, as shown in Figure 3-5.

Reranging with a pressure input and the zero and span buttons maintains the same analog span.

Figure 3-5. Rosemount 1151 Electronics Faceplate.

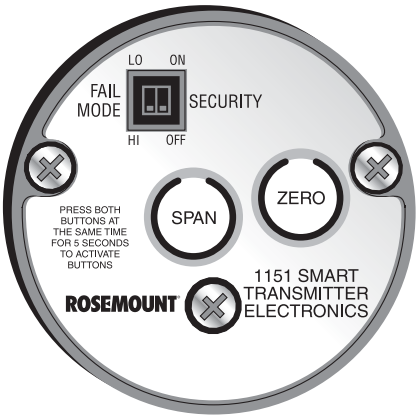

NOTE
User-selectable switches are shown in default position.

Use the following steps to rerange using the integral span and zero buttons:

1. Using a pressure source with an accuracy three to ten times the desired calibrated accuracy, apply a pressure equivalent to the lower calibrated value to the high side of the transmitter.
2. Remove the circuit side cover to expose the span and zero buttons. Hold both the span and zero buttons down simultaneously for at least five seconds to activate the controls. The buttons remain active for 15 minutes. After 15 minutes the buttons must be reactivated by pressing simultaneously and holding again.
3. Press the zero button for five seconds to set the 4 mA point. Verify that the output is 4 mA.
4. Apply a pressure equivalent to the higher calibrated value to the high side of the transmitter.
5. Press the span button for five seconds to set the 20 mA point. Verify that the output is 20 mA.

NOTE
Both the lower and upper range values must fall within the lower and upper range limits of the sensor module, and meet the minimum and maximum span criteria allowed by the transmitter.

Setting Output Type

HART Comm. Fast Key Sequence	1, 3, 5

When the square root output option is active the Rosemount 1151 analog output is proportional to flow. To avoid the extremely high gain that results as the input approaches zero, the Rosemount 1151 automatically switches to a linear output in order to ensure a more stable output near zero. Figure 3-6 illustrates this transition point.

The transition from linear to square root is not adjustable. It occurs at 0.8% of ranged pressure input or 9.0% of full-scale flow output in transmitters with Revision 5.2. software. In earlier software, the transition point occurred at 4.0% of ranged pressure input, or 20% of full scale flow output.

The transition from linear to square root output is smooth, with no step change or discontinuity in output.

Figure 3-6. Square Root Output Transition Point.

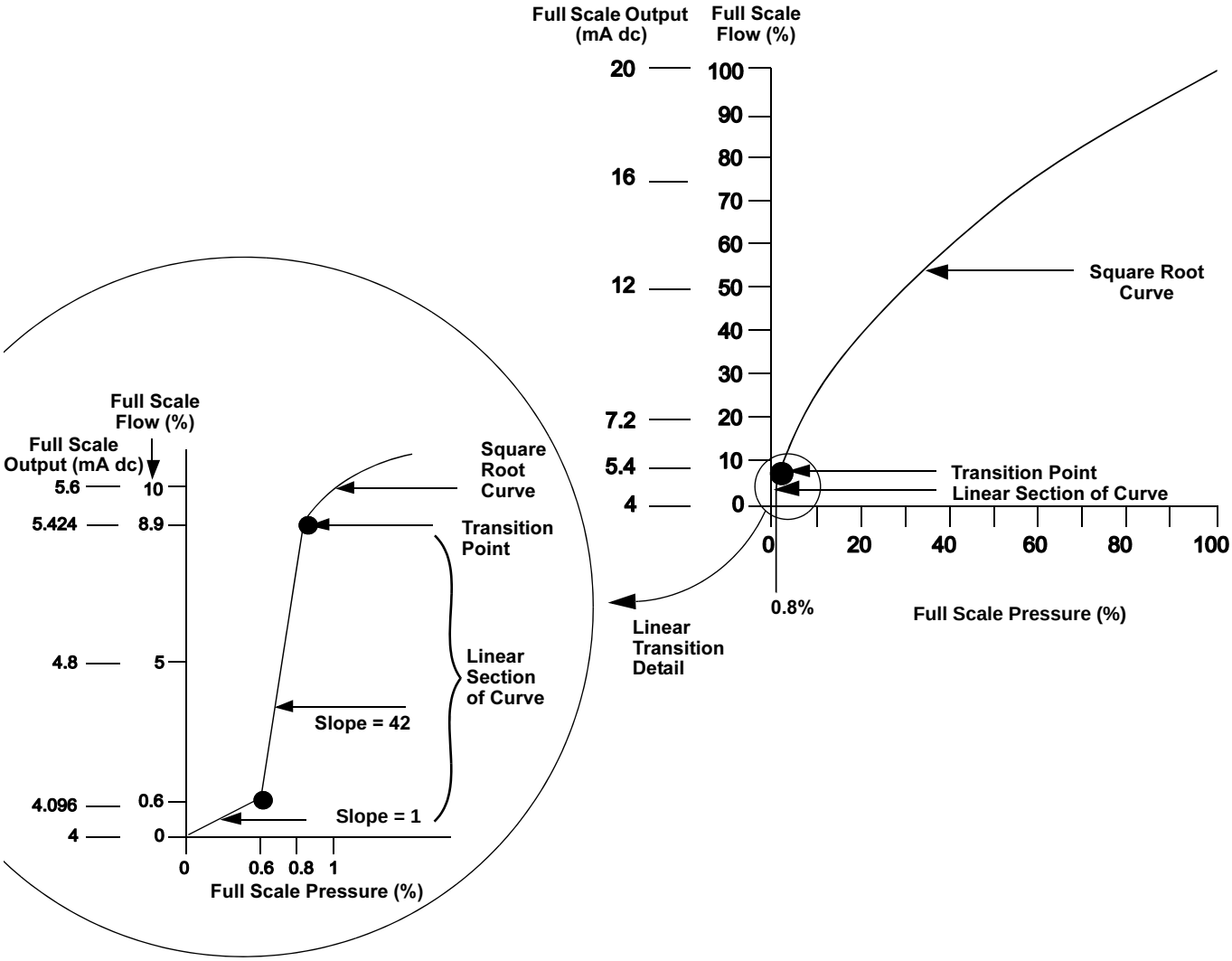

From 0.0 percent to 0.6 percent of the ranged pressure input, the slope of the curve is unity (y = x). This allows accurate calibration near zero. Greater slopes would cause large changes in output for small changes at input. From 0.6 percent to 0.8 percent, the slope of the curve equals 42 (y = 42x) to achieve continuous transition from linear to square root at the transition point.

Setting Damping

HART Comm. Fast Key Sequence	1, 3, 6

The Rosemount 1151 Smart Pressure Transmitter has electronic damping that can increase the response time of the transmitter to smooth the output when there are rapid input variations. High damping values filter out process noise, but response time is decreased. Low damping values increase response time, but process noise can also be detected.

For Rosemount 1151 Smart Pressure Transmitter transmitters, damping values may be set in 0.1 second increments from 0 to 16.0 seconds. The default damping value is 0.2 seconds (0.4 seconds for Range 3). Damping values for inert-filled sensors are slightly higher.

Advanced Functions

Burst Mode

HART Comm. Fast Key Sequence	1, 4, 3, 3, 3

When the Rosemount 1151 Smart is configured for burst mode, it provides faster digital communication from the transmitter to the control system by eliminating the time required for the control system to request information from the transmitter.

Burst mode is compatible with use of the analog signal. Because HART protocol features simultaneous digital and analog data transmission, the analog value can drive other equipment in the loop while the control system is receiving the digital information. Burst mode applies only to the transmission of dynamic data (pressure and temperature in engineering units, pressure in percent of range, and/or analog output in mA or V), and does not affect the way other transmitter data is accessed.

Access to information other than dynamic transmitter data is obtained through the normal poll/response method of HART communication. A HART-based communicator or the control system may request any of the information that is normally available while the transmitter is in burst mode. Between each message sent by the transmitter, a short pause allows the HART-based communicator or a control system to initiate a request. The transmitter will receive the request, process the response message, and then continue “bursting” the data approximately three times per second.

Saving, Recalling, and Cloning Configuration Data

Data that was entered off-line can be stored in the HART-based communicator memory and downloaded to other transmitters later. Data also can be copied from a transmitter in order to be sent to other transmitters in a process known as “cloning.” This is especially useful if when working with a large number of transmitters that require the same configuration data.

NOTE
The HART Communicator requires the use of the Transfer Menu to move data between the transmitter memory and the communicator. This menu is available from the Main Menu of the HART Communicator.

Multidrop Communication

Multidropping transmitters refers to the connection of several transmitters to a single communications transmission line. Communication between the host and the transmitters takes place digitally with the analog output of the transmitters deactivated. With the smart communications protocol, up to 15 transmitters can be connected on a single twisted pair of wires or over leased phone lines. Note that burst mode operation is not compatible with multidrop communications.

The application of a multidrop installation requires consideration of the update rate necessary from each transmitter, the combination of transmitter models, and the length of the transmission line. Multidrop installations are not recommended where intrinsic safety is a requirement. Communication with the transmitters can be accomplished with commercially available Bell 202 modems and a host implementing the HART protocol. Each transmitter is identified by a unique address (1-15) and responds to the commands defined in the HART protocol.

Figure 3-7 shows a typical multidrop network. This figure is not intended as an installation diagram. Contact Emerson Process Management product support with specific requirements for multidrop applications.

Figure 3-7. Typical Multidrop Network.

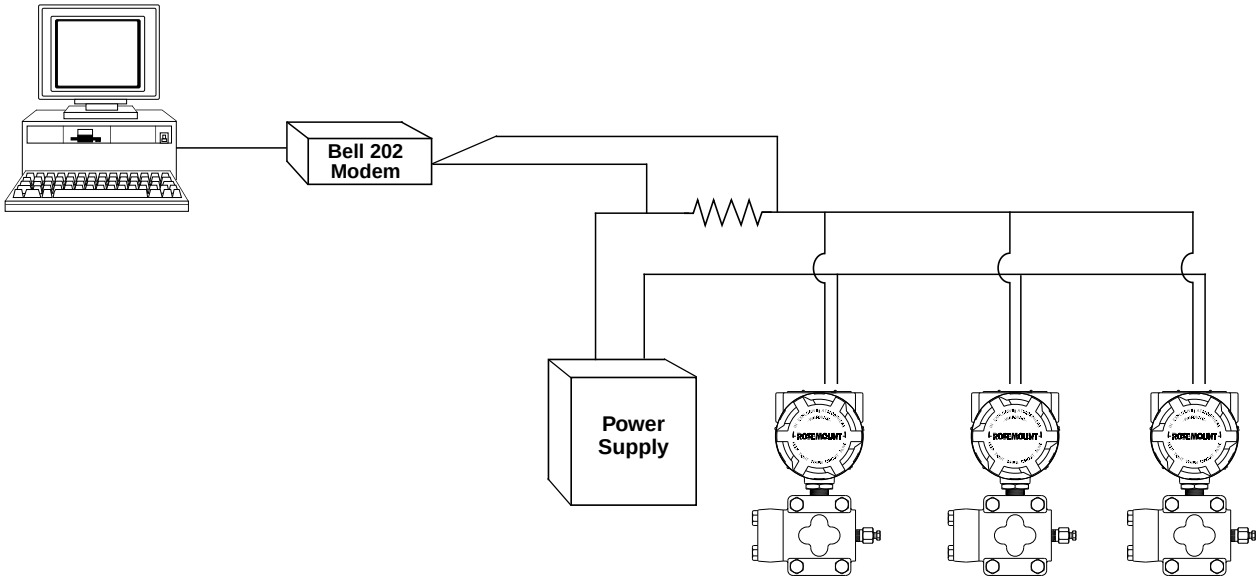

HART-based communicators can test, configure, and format a multidropped Rosemount 1151 in the same way as it can a Rosemount 1151 in a standard point-to-point installation.

NOTE
The Rosemount 1151 Smart Pressure Transmitter is set to address 0 at the factory, allowing it to operate in the standard point-to-point manner with a 4–20 mA output signal. To activate multidrop communication, the transmitter address must be changed to a number between 1 and 15 (inclusive). This change deactivates the 4–20 mA analog output, sending it to 4 mA. It also disables the failure mode alarm signal, which is controlled by the upscale/downscale switch.

Changing a Transmitter Address

HART Comm. Fast Key Sequence	1, 4, 3, 3, 1

To change the address of a multidropped transmitter, follow these fast key sequences. To activate multidrop communication, the transmitter address must be changed to a number from 1 to 15.

Polling a Multidropped Loop

HART Comm. Fast Key Sequence	1, 1, 1

Polling a multidropped loop determines the model, address, and number of transmitters on the given loop.

Section 4 Operation and Maintenance

Overview . . . . . **page 4-1**
Safety Messages . . . . . **page 4-1**
Smart Calibration . . . . . **page 4-2**
Analog Calibration . . . . . **page 4-11**

OVERVIEW

This section is separated into two parts: SMART and ANALOG. Go to the correct corresponding pages.

The Operation & Maintenance section contains information on calibration, including the trim functions for the Smart transmitters and hardware adjustments for the analog transmitters.

SAFETY MESSAGES

Warnings (⚠)

Procedures and instructions in this section that raise potential safety issues are indicated by a warning symbol (⚠). Refer to the following warning messages before performing an operation preceded by this symbol.

⚠WARNING

- Isolate a failed transmitter from its pressure source as soon as possible. Pressure that may be present could cause death or serious injury to personnel if the transmitter is disassembled or ruptures under pressure.
- Explosions can cause death or serious injury. Do not remove the instrument cover in explosive atmospheres when the circuit is alive.
- Explosions can cause death or serious injury. Do not break the housing seal in explosive environments. Breaking the housing seal invalidates the explosion-proof housing rating.
- Process leaks can cause death or serious injury. An incorrectly installed backup ring can destroy the o-ring and cause process leaks. Install the backup ring using the following procedure.
- Exposure to hazardous substances can cause death or serious injury. If a hazardous substance is identified, a Material Safety Data Sheet (MSDS), required by law to be available to people exposed to specific hazardous substances, must be included with the returned goods.
- Explosions can cause death or serious injury. Do not disassemble the glass in the meter cover in explosive atmospheres. Disassembling the glass in the meter cover invalidates the explosion-proof meter rating.

⚠WARNING

- The following performance limitations may inhibit efficient or safe operation. Critical applications should have appropriate diagnostic and backup systems in place. Pressure transmitters contain an internal fill fluid. It is used to transmit the process pressure through the isolating diaphragms to the pressure sensing element. In rare cases, oil leak paths in oil-filled pressure transmitters can be created. Possible causes include physical damage to the isolator diaphragms, process fluid freezing, isolator corrosion due to an incompatible process fluid, etc. A transmitter with an oil fill fluid leak can continue to perform normally for a period of time. Sustained oil loss will eventually cause one or more of the operating parameters to exceed published specifications while a small drift in operating point output continues. Symptoms of advanced oil loss and other unrelated problems include:
    - Sustained drift rate in true zero and span or operating point output or both
    - Sluggish response to increasing or decreasing pressure or both
    - Limited output rate or very nonlinear output or both
    - Change in output process noise
    - Noticeable drift in operating point output
    - Abrupt increase in drift rate of true zero or span or both
    - Unstable output
    - Output saturated high or low

SMART CALIBRATION

Calibration Overview

Complete calibration of the Rosemount 1151 Smart Pressure Transmitter involves the following tasks:

Configuring the Analog Output Parameters

- Setting process variable units (page 3-7)
- Reranging (page 3-7)
- Setting output type (page 3-11)
- Setting damping (page 3-12)

Calibrating the Sensor

- Sensor trim (page 4-5)
- Zero trim (page 4-5)

Calibrating the 4–20 mA Output

- 4–20 mA output trim (page 4-11) or
- 4–20 mA output trim using other scale (page 4-11)

Figure 4-1. Rosemount 1151 Smart Transmitter Data Flow with Calibration Options.

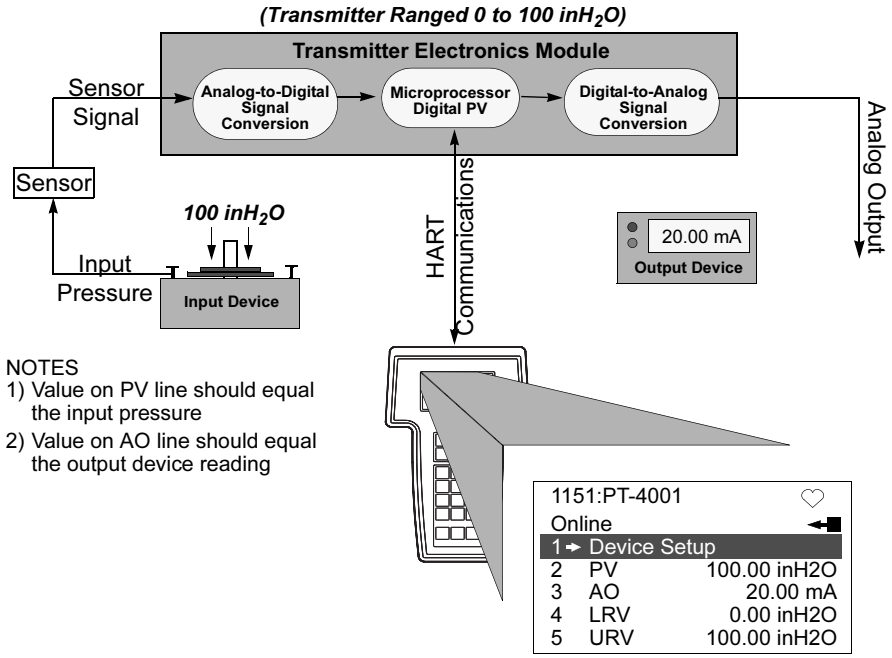

Figure 4-1 illustrates the Rosemount 1151 Smart transmitter data flow. This data flow can be summarized in four major steps:

1. A change in pressure is measured by a change in the sensor output (Sensor Signal).
2. The sensor signal is converted to a digital format that can be understood by the microprocessor (Analog-to-Digital Signal Conversion).
3. Corrections are performed in the microprocessor to obtain a digital representation of the process input (Digital PV).
4. The Digital PV is converted to an analog value (Digital-to-Analog Signal Conversion).

Figure 4-1 also identifies the approximate transmitter location for each calibration task. Note that the data flows from left to right, and a parameter change affects all values to the right of the changed parameter.

Table 4-1 identifies the recommended calibration procedures for each type of Rosemount 1151 Smart transmitter for both bench and field calibration.

Table 4-1. Recommended Calibration Tasks.

Transmitter	Bench Calibration Tasks	Field Calibration Tasks
Standard Calibration Tasks 1151DP 1151GP 1151HP 1151LT	1. Set output configuration parameters: a) Set the Transmitter Range Points. b) Set the Output Units. c) Set the Output Type (linear or square root). d) Set the Damping Value. 2. *Optional:* Perform a Full Sensor Trim —Pressure source required. 3. *Optional:* Perform an Analog Output Trim —Multimeter required.	1) Reconfigure parameters if necessary. 2) Zero trim the transmitter to compensate for mounting position effects or static pressure effects.
1151AP	Standard Bench Calibration, **except step 2**: 2. *Optional:* Perform a Full Sensor Trim if equipment is available (accurate absolute pressure source required); otherwise, perform the Low Trim Value section of Full Sensor Trim procedure.	1) Reconfigure parameters if necessary. 2) Perform Low Trim Value section of Full Sensor Trim procedure to correct for mounting position effects.

NOTE
A HART-based communicator is required for all sensor and output trim procedures.

Calibrate the Sensor

Digital Trim (Sensor Trim and Analog Output Trim)

In order to understand the digital trim function, it is necessary to understand that smart transmitters operate differently from conventional analog transmitters. Smart transmitters are characterized, which involves comparing a pressure input with the output of each transmitter's sensor module. The information obtained in the comparison is stored in the sensor module EEPROM during the characterization process. In operation, the transmitter uses this information to produce a process variable output, in engineering units, dependent on the pressure input. The digital trim function allows corrections to be made to this factory-stored curve.

The digital trim procedure is a two-step process. The first step, called sensor trim, consists of matching the digital process variable reading of the transmitter to a precision pressure input. The second step, called 4–20 mA trim, consists of adjusting the output electronics.

This procedure should not be confused with reranging. Although you can still match a pressure input to a 4 or 20 mA output through a reranging function, you have not affected the transmitter's interpretation of that input. A *sensor trim* allows you to alter the transmitter's interpretation of the input signal. *A 4-20 mA analog output trim* allows you to alter the transmitter's conversion of that interpretation into an analog 4–20 mA output.

The transmitter can only be as accurate as the equipment used to perform the digital trim. Use precise equipment under stable, ambient conditions for best results. If such equipment is not available, it may be better to return the transmitter to a local Rosemount service center for verification of the trim values. To eliminate the possibility of over-trimming the transmitter, the Rosemount 1151 Smart will accept only trim values that are within 5 percent of its original characterization.

Sensor Trim

The sensor may be trimmed in two ways: sensor trim and zero trim. They vary in complexity, and their use is application-dependent.

The low trim value should be trimmed first. This provides a stable reference for additional sensor trim adjustment. Adjustment of the low trim value provides an offset correction to the factory-established characterization curve. Adjustment of the high trim value provides a slope or gain correction to the characterization curve based on the low trim value. In neither case is the factory-established characterization curve changed by this procedure. The trim values allow optimized performance over a specified measuring range at the calibration temperature. See Figure 4-3 on page 4-6 for instrumentation set up.

Zero Trim

HART Comm. Fast Key Sequence	1, 2, 3, 3, 1

A **zero trim** is a simpler, one-point adjustment. It must be zero-based (in other words, within 3.0% of true zero) and it may be performed when an exact pressure source is not available for the second pressure needed in a sensor trim.

It is useful for compensating for mounting position effects or for zero shifts due to static pressure in differential pressure applications. However, since this correction maintains the slope of the characterization curve, it should not be used in place of a sensor trim over the full sensor range.

Zero trim is best performed with the transmitter installed in its final mounting position with static pressure applied (or no pressure for a gage transmitter).

NOTE
Because a zero trim must be zero-based, it generally should not be used with Rosemount 1151 Smart Absolute Pressure Transmitters. Absolute pressure transmitters reference absolute zero. To correct mounting position effects on a Rosemount 1151 Smart Absolute Pressure Transmitter, perform a low trim within the full sensor trim function. The low trim function provides a “zero” correction similar to the zero trim function but it does not require the input to be zero based.

Sensor Trim

HART Comm. Fast Key Sequence	1, 2, 3, 3

A **sensor trim** is a two-point sensor calibration where two end-point pressures are applied, and all output is linearized between them. To start the procedure, connect the communicator and a pressure input source of at least three times greater accuracy than the Rosemount 1151 Smart Transmitter as shown in Figure 4-3. Always let the variable stabilize for 10 seconds after application of the pressure source before taking its reading.

Figure 4-2. Sensor Trim

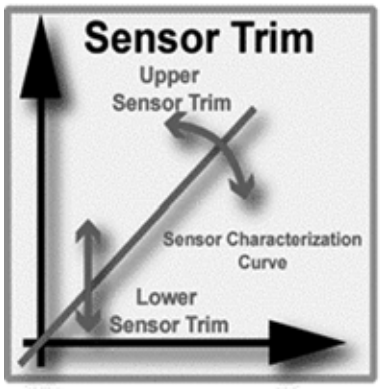

Figure 4-3. Digital Trim Connection Drawing (4–20 mA Transmitters).

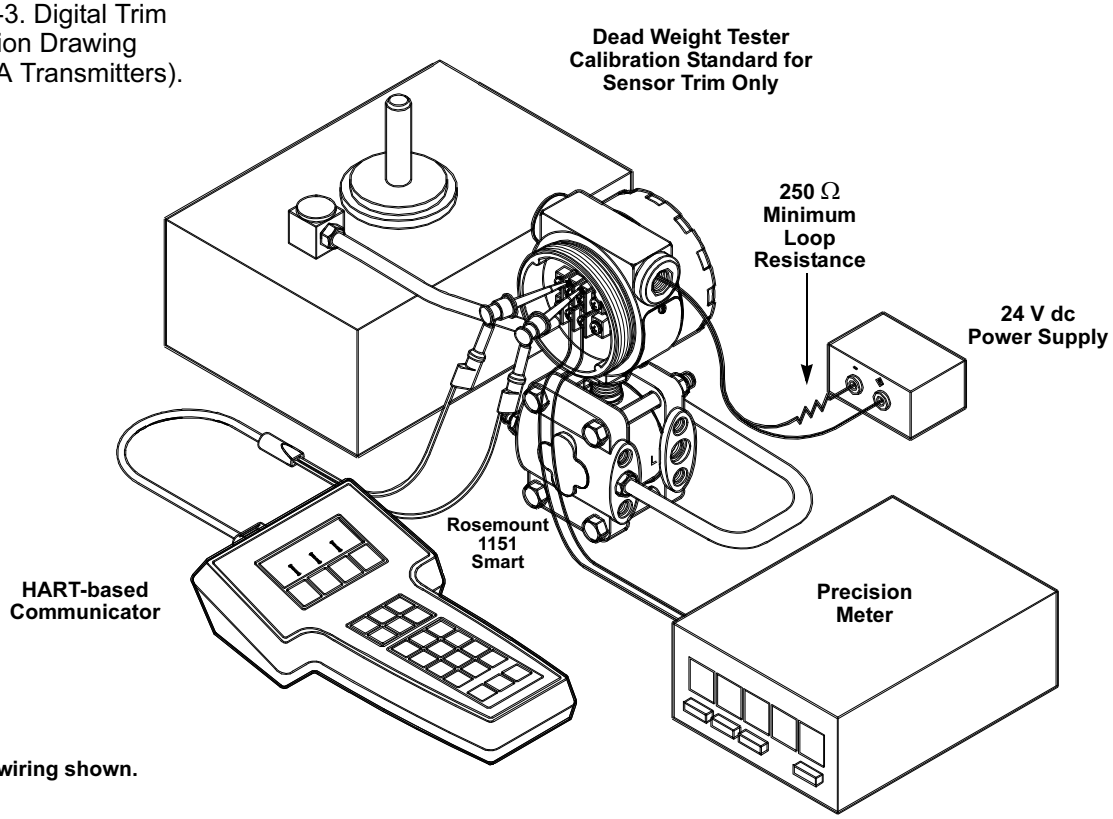

NOTE
4–20 mA wiring shown.

NOTE
The Rosemount 1151 Smart Pressure Transmitter allows approximately a 5.0% URL deviation from the characterized curve established at the factory.

NOTE
A sensor trim requires a pressure source at least three times more accurate than the transmitter. For best accuracy, make sure the applied pressure is equal to or slightly less than the desired 4 mA setpoint, or equal to or slightly greater than the 20 mA setpoint.

The last trim/input values used will be displayed briefly. The engineering units shown match those selected under configuration or in transmitter characterization.

In selecting the pressure input values, the low and high values should be equal to or outside the 4 and 20 mA points. Do not attempt to obtain reverse output by reversing the high and low points.

Compensating for High Static Pressure

Systematic Error Correction

One feature of sensor trim is the ability to use it to improve the Rosemount 1151 Smart DP or HP performance by correcting for systematic error because of static pressure.

NOTE
Corrections can only be made in linear mode. Switch from square-root mode to linear mode if necessary.

To better understand the effect of static pressure on the Rosemount 1151DP/HP transmitter, below is a technical description.

Static pressure affects the δ-cell in two independent ways. First, with zero input differential, the effects on the high and low side of the cell tend to cancel each other, but this cancellation may not be complete at higher static pressures. The slight remaining difference in output is called the *Static Pressure Effect On Zero.* While the magnitude of the zero effect is predictable, its direction is not. The effect is repeatable, however, and can be eliminated by simply rezeroing the transmitter at line pressure.

Figure 4-4. δ-Cell™ Construction.

.

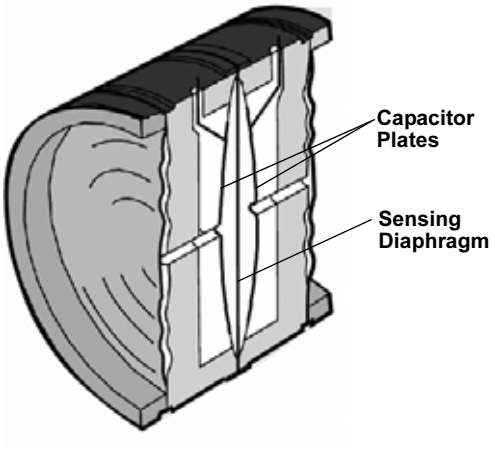

Second, transmitter span is also affected by static pressure. To understand this effect, it is necessary to understand the inner workings of the δ-cell sensor.

The δ-cell sensor is a variable capacitance device. Differential pressure is sensed as a capacitance that varies with the position of a movable plate, or sensing diaphragm, between two fixed plates. See Figure 4-4.

In the actual cell design, the sensing diaphragm is stretched between the fixed plates and welded to the cylindrical body of the cell.

When high pressure is applied to *both* sides of the cell, a slight deformation takes place, increasing tension in the sensing diaphragm. See Figure 4-5.

Figure 4-5. Static Pressure Effect on the δ-Cell Sensor.

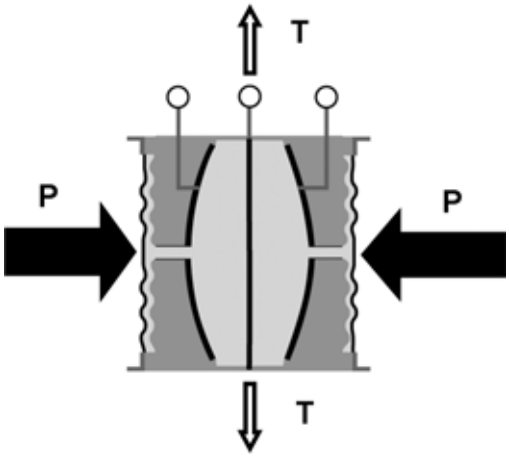

This increase in tension causes a reduction in transmitter output; as static pressure increases, output for any given differential decreases. In other words, as static pressure increases, a slightly higher differential pressure is required to move the sensing diaphragm a given amount. This static pressure effect is repeatable and linear, because it is within the realm governed by Hooke's Law, which states that a body acted upon by an external force will deform linearly, proportional to the stress, so long as a certain limit is not exceeded.

High static pressure causes a systematic span shift in the transmitter. Because static pressure always acts to reduce span and is linear, it is easy to correct the effect during calibration by performing a sensor trim. Table 4-2 shows the amount of systematic span shift for Range Codes 3 through 8.

Table 4-2. Systematic Span Shift

Range Code	316L SST	Alloy C-276
3	–1.75%	–1.0%
4	–0.90%(1)	–0.60%
5	–0.80%(1)	–0.70%
6	–1.50%(1)	–1.45%
7	–1.00%(1)	–1.05%
8	–0.65%	–0.65%

(1) Applies also to Rosemount 1151HP.

Correction for systematic error is made by simply calculating a correction factor for the high trim and low trim and inputting this correction into the transmitter.

To correct for systematic error due to static line pressure, use the following formulas to determine a corrected value for Low Trim and High Trim.

Low Trim (LT) = LRV + S (LRV) P

WhereLT = Corrected Low Trim Value at Atmosphere
LRV = Lower Range Value at Pressure P
S = Span Shift from Table 4-2
P = Static Line Pressure

High Trim (HT) = URV + S (URV) P

WhereHT = Corrected High Trim Value at Atmosphere
URV = Upper Range Value at Pressure P
S = Span shift from Table 4-2
P = Static Line Pressure

Example 1

A Rosemount 1151DP Range 4 transmitter is to be calibrated 0–90 inH_2O and used in an application where static line pressure is 1,200 psi.

Looking at Table 4-2 you see the Range 4 span is reduced by 0.90% per 1,000 psig. At 1,200 psi the span would be reduced by 1.08 percent.
0.009 X 1.2 = 1.08%

Analog Electronics
There are two ways to calibrate an analog transmitter for this application. One method is to increase the pressure when adjusting the span. Another method is to apply the span pressure and increase the mA output.

1. Apply 0 inH_2O pressure and adjust the output to 4mA. then apply 90.97 inH_2O pressure and adjust the output to 20 mA.
   90 inH_2O $\times$ 1.08% =0.97 inH_2O
   90 inH_2O ±0.97 inH_2O = 89.03 inH_2O
2. Apply 0 inH_2O pressure and adjust the output to 4mA. then apply 90 inH_2O pressure and adjust the output to 20.173 mA.
   16 mA $\times$ 1.08% =0.173 mA

Smart Electronics

There are also two ways to calibrate a smart transmitter for the above mentioned application. One way is to rerange the transmitter; the other way is to perform a sensor trim.

1. Using a Field Communicator, configure the range points to 0–89.03 inH_2O.
2. Using a Field Communicator, perform a sensor trim. Select Hi Val and apply 90 inH_2O pressure. When the communicator asks what pressure you applied enter 89.03 inH_2O. Set the range points to 0–90 inH_2O.

Example 2

A Rosemount 1151HP Range 5 transmitter with Alloy C-276 diaphragms is to be calibrated at 0–220 inH_2O and used in an application where the static line pressure is 2,300 psi.

Looking at Table 4-2 we see the Range 5 with Alloy C-276 diaphragms span is reduced by 0.70 percent per 1,000 psig. At 2,300 psi the span would be reduced by 1.61 percent.
0.007×2.3 - 1.61%

Analog Electronics
Once again, there are two ways to calibrate an analog transmitter for this application. One method is to increase the pressure when adjusting the span. Another method is to apply the span pressure and increase the mA output.

1. Apply 0 inH_2O pressure and adjust the output to 4mA. then apply 223.54 inH_2O pressure and adjust the output to 20 mA.
   220 inH_2O X 1.61% = 3.54 inH_2O
   220 inH_2O ± 3.54 inH_2O = 216.46 inH_2O
2. Apply 0 inH_2O pressure and adjust the output to 4mA. then apply 220 inH_2O pressure and adjust the output to 20.257 mA.
   16 mA X 1.61% =.257 mA

Smart Electronics
There are also two ways to calibrate a smart transmitter for this application. One method is to rerange the transmitter. The other method is to perform a sensor trim.

1. Set the range points to 0–223.54 inH_2O by using the Field communicator.
2. Using the Field communicator, perform a Sensor Trim. Select Hi Val, and apply 216.96 inH_2O pressure. When the communicator asks what pressure was applied, enter 216.96 inH_2O. Set the range points to 0–220 inH2O.

Digital to Analog Converter Trim

Deciding Whether to Trim the D/A Converter

After the microprocessor conditions the sensor signals, it outputs a digital word. The digital-to-analog (D/A) output circuitry converts the word to an analog signal for the 4–20 mA communications line. It may be necessary to check and trim this circuitry after a period of time. The 4–20 mA output trim function can also be used to make adjustments to allow for peculiarities of a particular readout device in the loop.

To determine whether the output must be trimmed, connect the HART-based communicator and a precision milliammeter capable of reading ± 1 micromole in the loop as shown in Figure 4-3.

Next, perform a loop test as described on page 3-6. Follow the loop test procedure and set the transmitter to a 4 mA output. Then check the ammeter. The reading should be within ±3 μA of 4 mA.

Then set the transmitter to a 20 mA output and check the milliammeter. The reading should be within ± 3 μA of 20 mA. The output should be trimmed if the values on the meter exceed this tolerance range.

When trimming the output, adjustments are made to the output circuitry. The appropriate shift will be made for all intermediate points between 4 and 20 mA.

The communicator will allow the D/A converter to be trimmed by using a current meter or voltage meter. When using a current meter, follow the sequence outlined in **4–20 mA Analog Output Trim**. When using a voltage meter or a meter whose display does not read out in 4–20 mA, follow the sequence outlined under **4–20 mA Analog Output Trim Using Other Scale**.

It may be necessary to calibrate the current output circuitry after a period of time and use. The 4–20 mA output trim function can also be used to make adjustments to allow for peculiarities of a particular readout device in the loop.

4–20 mA Analog Output Trim

HART Comm. Fast Key Sequence	1, 2, 3, 2, 1

A 4–20 mA output trim adjusts the transmitter milliampere output to match a plant's current standard. Use this procedure when trimming the converter using a current meter.

4–20 mA Analog Output Trim Using Other Scale

HART Comm. Fast Key Sequence	1, 2, 3, 2, 2

To trim the output using a voltage or other meter, connect the meter across a resistor in the loop. For best accuracy, use a precision resistor. The scaling function may be used if the meter displays other units, such as 0–100%.

NOTE
If a resistor is added to the loop, before proceeding, ensure that the power supply is sufficient to power the transmitter to a 20 mA output with the additional loop resistance.

ANALOG CALIBRATION

Calibration Overview

Calibration of the Rosemount 1151 Analog Pressure Transmitter is simplified by its compact and explosion-proof design, external span and zero adjustments, separate compartments for electronics and wiring, and weatherproof construction. Descriptions of span, linearity, zero adjustments, and damping follow.

Figure 4-6. Output Trim

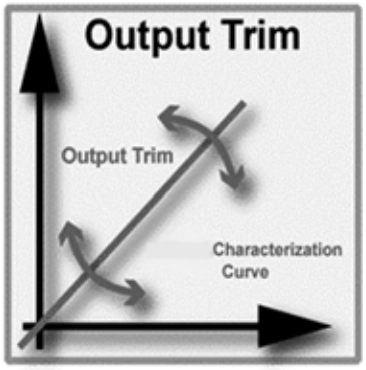

Quick Calibration Procedure (for E and G Electronics)

The following Quick Calibration Procedures are for those users who are already familiar with the Rosemount 1151 Analog.

NOTE
The zero and span adjustments are interactive. For applications requiring large elevated or suppressed values, refer to Elevated or Suppressed Zeros on page 3-7.

1. Apply 4 mA-point pressure and turn zero screw to output 4 mA.
2. Apply 20 mA-point pressure.
3. Subtract actual output from desired output.
4. Divide difference by 3.
5. Turn span screw above or below desired output by value in Step 4.
6. Repeat Steps 1 through 5 until calibrated.

Quick Calibration Procedure (For L and M Electronics)

1. Apply 1 V dc-point pressure for M electronics (0.8 V dc for L electronics) and turn zero screw to output 1 V dc (0.8 V dc for L electronics).
2. Apply 5 V dc-point pressure (M electronics) or 3.2 V dc (L electronics).
3. Subtract actual output from desired output.
4. Divide difference by 3.
5. Turn span screw above or below desired output by value in Step 4.
6. Repeat Steps 1 through 5 until calibrated.

Example for a Rosemount 1151 Analog DP Range 4: For a desired calibration of 0 to 100 inH2O, use the following procedure:

1. Adjust the zero. With zero input applied to the transmitter, turn the zero adjustment screw until the transmitter reads 4 mA.
2. Adjust the span. Apply 100 inH2O to the transmitter high side connection. Turn the span adjustment screw until the transmitter output reads approximately 20 mA.
3. Release the input pressure and readjust the zero output to read 4 mA ±0.032 mA.
4. Re-apply 100 inH2O to the transmitter. If the output reading is greater than 20 mA, divide the difference by 3, and subtract the result from 20 mA. Adjust the 100% output to this value.

If the output reading is less than 20 mA, divide the difference by 3 and add the result to 20 mA. Adjust the 100% output to this value.

Example: The full scale transmitter output is 20.100 mA. Dividing 0.100 by 3.0 gives the product 0.033. Subtracting the product 0.033 from 20.00 mA gives the difference 19.967 mA. Adjust the 100% output to this value.

5. Release input pressure and readjust the zero.
6. Apply 100% input and repeat Steps 3 through 5 if the full scale output is not 20 ±0.032 mA.

NOTE
Under operating conditions that subject the transmitter to temperature extremes or significant vibration, mechanical backlash may occur in the zero and span adjustment screws. To improve the stability of zero and span settings in these circumstances, back off the adjustment screws slightly after final adjustment to break contact between the potentiometer blades and the adjustment screw slot surfaces.

Data Flow with Calibration Options

Figure 4-7 illustrates the Rosemount 1151 Analog Transmitter data flow with calibration tasks.

Figure 4-7. Rosemount 1151 Transmitter Data Flow with Calibration Options.

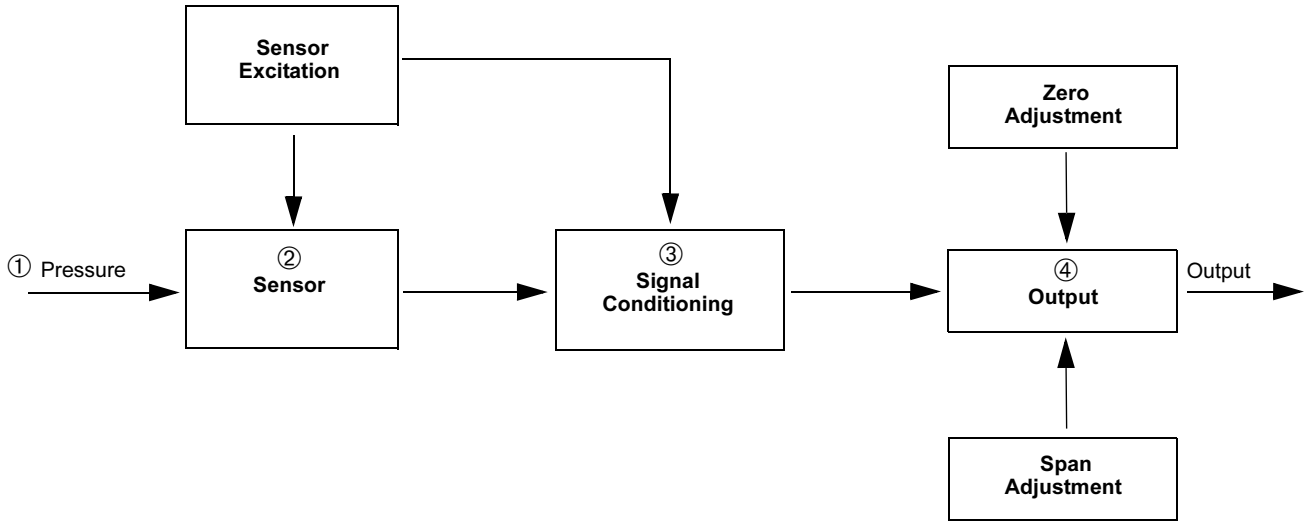

This data flow can be summarized in four major steps:

1. Pressure is applied to the sensor.
2. A change in pressure is measured by a change in the sensor output.
3. The sensor signal is conditioned for various parameters.
4. The conditioned signal is converted to an appropriate analog output.

Span Adjustment Range

The span on a Rosemount 1151 Analog with E and G output options is continuously adjustable to allow calibration anywhere between maximum span and one-sixth of maximum span. For example, the span on a Range 4 transmitter can be adjusted between 25 and 150 inH_2O (6.2 and 37.2 kPa).

Zero Adjustment Range

The zero on a Rosemount 1151 Analog with the E or G output options can be adjusted for up to 500% suppression or 600% elevation. See Figure 4-8.

Figure 4-8. Zero Adjustment Range.

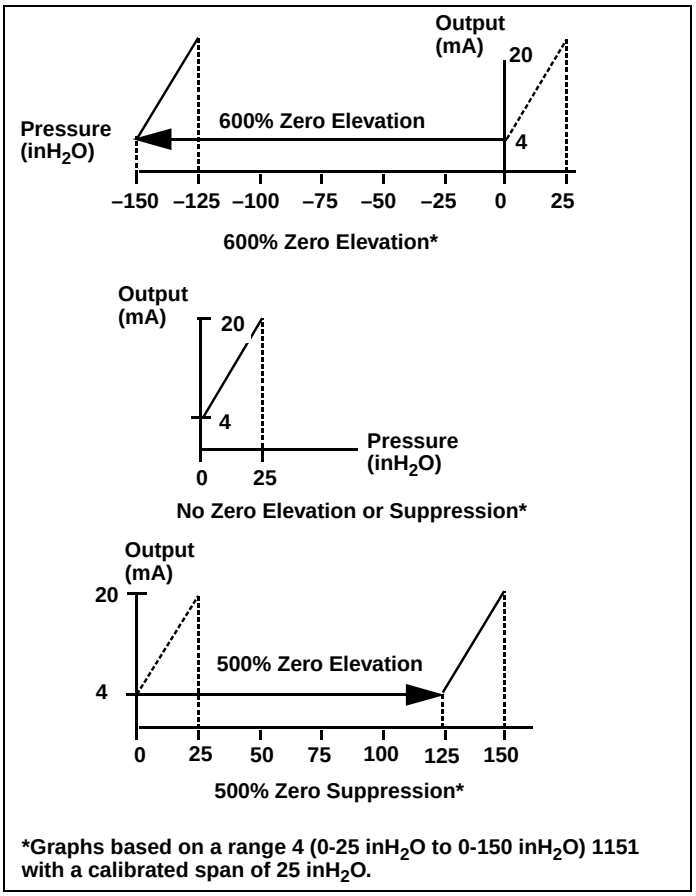

The zero may be elevated or suppressed to these extremes with the limitation that no pressure within the calibrated range exceeds the full-range pressure limit. For example, a Range 4 transmitter cannot be calibrated for 100 to 200 inH_2O (24.8 to 49.7 kPa) (only 100% zero suppression) because 200 inH_2O exceeds the 150 inH_2O full-range pressure limit of a Range 4.

To make large elevation or suppression adjustments, it is necessary to move the jumper on the component side of the amplifier board. Figure 4-9 on page -15 shows elevation and suppression jumper settings. The jumper has three positions. The middle position allows normal levels of elevation or suppression. For larger adjustments, move the jumper to the ELEVATE ZERO (EZ) or SUPPRESS ZERO (SZ) as marked.

NOTE
Always make sure that the jumper is fully seated on its pins. If the jumper has not been placed in any of the three positions, the amplifier board will provide normal levels of elevation or suppression. A slide switch replaces the jumper pin on some versions of the amplifier board.

Figure 4-9. Elevation and Suppression Jumper Settings.

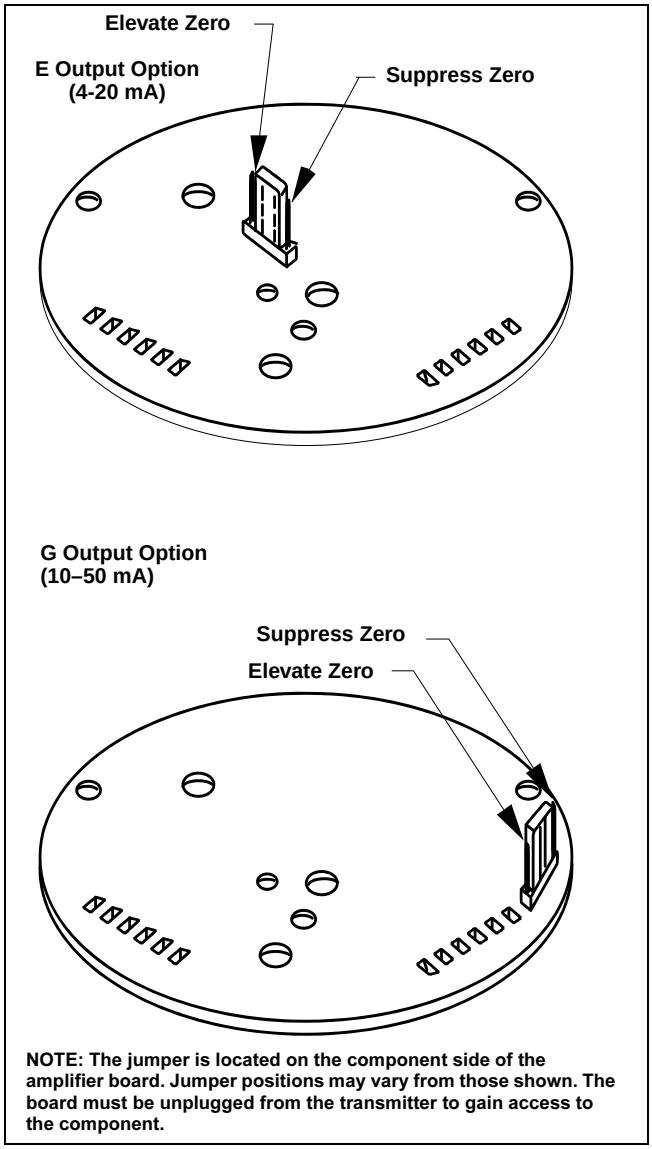

NOTE: The jumper is located on the component side of the amplifier board. Jumper positions may vary from those shown. The board must be unplugged from the transmitter to gain access to the component.

Zero and Span Adjustment

The zero and span adjustment screws are accessible externally behind the nameplate on the terminal side of the electronics housing. See Figure 4-10. The output of the transmitter increases with clockwise rotation of the adjustment screws. The zero adjustment screw and ELEVATE ZERO/SUPPRESS ZERO jumper do not affect the span. Span adjustment, however, does affect zero. This effect is minimized with zero-based spans. Therefore, when calibrations having elevated or suppressed zeros are made, it is easier to make a zero-based calibration and achieve the required elevation or suppression by adjusting the zero adjustment screw (and ELEVATE ZERO/SUPPRESS ZERO jumper as required).

A degree of mechanical backlash is present in the zero and span adjustments, so there will be a dead band when the direction of adjustment is changed. Because of the backlash, the simplest procedure is to purposely overshoot a larger amount before reversing the direction of the adjustment.

Figure 4-10. Zero and Span Adjustment Screws.

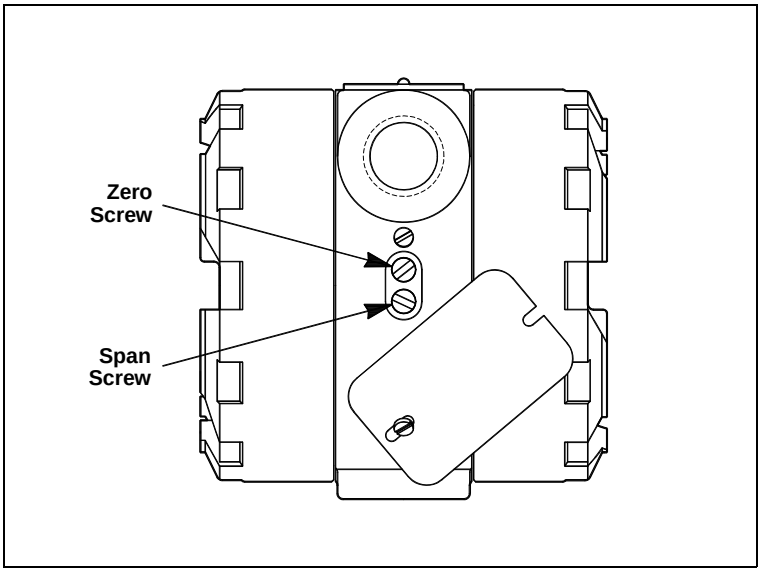

Elevated or Suppressed Zeros

Non-zero-based calibrations are termed as having “elevated” or “suppressed” zeros. Calibrations that have a lower calibrated value below zero are termed elevated. Compound ranges are included in this category. Calibrations that have a lower calibrated value above zero are termed suppressed.

The easiest way to calibrate transmitters with elevated or suppressed zeros is to perform a zero-based calibration and then elevate or suppress the zero by adjusting the zero adjustment screw.

Rosemount 1151 Analog DP Range 4 Suppression Example: For a desired calibration of 20 to 120 inH_2O (4.9 to 29.8 kPa), proceed as follows:

1. Calibrate the transmitter to 0 to 100 inH_2O (0 to 24.8 kPa) as described in the zero and span adjustment information.
2. Apply 20 inH_2O (4.9 kPa) to the high side process connection, and adjust the zero until the transmitter output reads 4 mA.
   Do not use the span adjustment.

Rosemount 1151 Analog DP Range 4 Elevation Example: For a calibration of –120 to –20 inH_2O (–29.8 to –4.9 kPa), proceed as follows:

1. Calibrate the transmitter to 0 to 100 inH_2O (0 to 24.8 kPa) as described in the zero and span adjustment information.
2. Apply 120 inH_2O (29.8 kPa) to the low side process connection, and adjust the zero until the transmitter output reads 4 mA.
   Do not use the span adjustment.

NOTE
For large amounts of elevation or suppression, it may be necessary to reposition the ELEVATE/SUPPRESS ZERO jumper. To do this, remove the amplifier board, and move the jumper to the ELEVATE or SUPPRESS position as required. See Figure 4-9 on page -15.

Linearity Adjustment

In addition to the span and zero adjustments, a linearity adjustment screw (marked LIN) is located on the solder side of the amplifier board. See Figure 4-11. This is a factory calibration adjusted for optimum performance over the calibrated range of the instrument and normally is not readjusted in the field. The user may, however, maximize linearity over a particular range using the following procedure:

1. Apply mid-range pressure and note the error between the theoretical and actual output signal.
2. Apply full-scale pressure. Multiply the error noted in Step 1 by six and then that product by the Range Down Factor, which is calculated as shown below:

$$\text{Range Down Factor} = \frac{\text{Maximum Allowable Span}}{\text{Calibrated Span}}$$

Add this result to the full-scale output (for negative errors), or subtract the result from the full-scale output (for positive errors) by turning the linearity adjustment screw.

Example: At 4 to 1 Range Down Factor, the mid-scale point is low by 0.05 mA. Therefore, turn the linearity adjustment screw until full-scale output increases by (0.05 mA $\times$ 6 $\times$ 4) = 1.2 mA.

3. Readjust the zero and span.

Figure 4-11. Damping and Linearity Adjustment Screws.

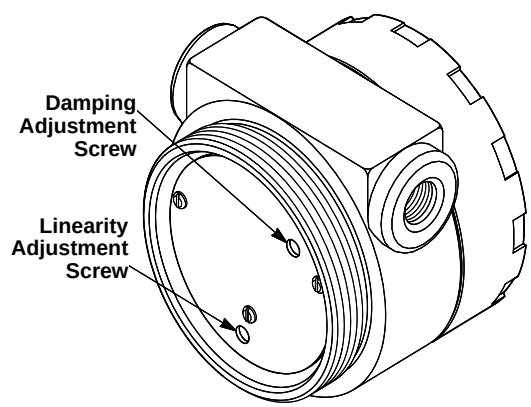

Access to linearity and damping adjustments is gained by removing cover on circuit board side.
Location of linearity adjustment screws may vary slightly between output codes.

Damping Adjustment

The amplifier boards for output options E and G are designed to permit damping of rapid pulsations in the pressure source through adjustment of the damping screw shown in Figure 4-11 on page -17. The adjustment is marked DAMP on the solder side of the amplifier board.

The settings available provide time constant values between 0.2 and 1.66 seconds. The instrument is calibrated and shipped with this control set at the counterclockwise stop (0.2 second time constant). It is recommended that the shortest possible time constant setting be selected. Since the transmitter calibration is not influenced by the time constant setting, the damping may be adjusted with the transmitter connected to the process. Turn the damping control clockwise until the desired damping is obtained.

NOTE
The adjustment screw has positive stops at both ends. Forcing it beyond the stops may cause permanent damage.

Static Pressure Span Correction Factor

High static pressure causes a systematic span shift in the transmitter. It is linear and easily correctable during calibration. Table 4-3 shows the amount of span shift for range codes 3 through 8.

Table 4-3. Rosemount 1151 Analog DP/HP Span Shift.

Range Code	Span Shift % Input Per 1,000 psi	
	316L SST	Alloy C-276
3	–1.75%	–1.00%
4	–0.87%	–0.60%
5	–0.81%	–0.70%
6	–1.45%	–1.45%
7	–1.05%	–1.05%
8	–0.55%	–0.55%

The following examples illustrate a compensation method of accounting for the span shift. For more complicated calibration conditions, contact your local Emerson Process Management representative.

Example 1 - Refer to Table 4-3: One method is to adjust the input and allow the transmitter output to remain at 20 mA. Use the following formula:

Corrected Input

= Desired URV + [(S × URV) × (P/1000)],

Where S = Value from Table 4-3, divided by 100.

To calibrate a Range 4 transmitter 0 to 150 inH_2O (0 to 37.2 kPa) and correct for 1,500 psi static line pressure, use the following correction:

Corrected Input

= 150 + [(–0.0087 × 150) × (1500/1000)]

= 148.04 inches

With 148.04 inches applied as input at atmospheric pressure, set the transmitter to 20 mA. When the transmitter is exposed to 1,500 psi static line pressure, output will be 20 mA at 150 inches input.

Where computers or microprocessor receivers are used, the mathematical definitions used in the preceding tables can be used to automatically and continuously make the correction.

All transmitters should be rezeroed under line pressure to remove zero error.

Example 2 - Refer to Table 4-4: A Rosemount 1151 Analog DP Range 4 with a 4–20 mA output operating at 1,200 psi static pressure requires the output at 100% to be corrected to 20.168 mA. Therefore, the transmitter should be adjusted from 4–20.168 mA during calibration. After installation, and with both process inputs pressurized to 1,200 psi, readjust the zero to 4.000 mA to remove the small zero error.

Table 4-4. Rosemount 1151 Analog DP Static Pressure 4–20 mA Output Code E Corrected Output Calibration at 100% Input SST Isolators.

Static Pressure (psi)	Static Pressure (kPa)	Range 3	Range 4	Range 5
100	689	20.029	20.014	20.013
200	1379	20.057	20.028	20.026
300	2068	20.086	20.042	20.039
400	2758	20.114	20.056	20.052
500	3447	20.143	20.070	20.066
600	4137	20.171	20.084	20.079
700	4826	20.200	20.098	20.092
800	5516	20.228	20.112	20.104
900	6205	20.257	20.126	20.118
1000	6895	20.285	20.140	20.131
1100	7584	20.314	20.154	20.144
1200	8274	20.342	20.168	20.157
1300	8963	20.371	20.182	20.170
1400	9653	20.399	20.196	20.183
1500	10342	20.428	20.210	20.197
1600	11032	20.456	20.224	20.210
1700	11721	20.485	20.238	20.223
1800	12411	20.513	20.252	20.236
1900	13100	20.542	20.266	20.250
2000	13790	20.570	20.280	20.262

Example 3 - Refer to Table 4-5: The correction factor at 100% input shift for a Range 5 transmitter with a 4–20 mA output operating at 1,500 psi static pressure would be:

$S = 0.131 \times 1.5 = 0.197$ mA

Therefore, the calibration for this transmitter would be from 4–20.197 mA.

Table 4-5. Output Correction Factors SST Isolators.

Range Code	E Output 4–20 mA	G Output 10–50 mA
3	S = 0.285 P	S = 0.712 P
4	S = 0.140 P	S = 0.350 P
5	S = 0.131 P	S = 0.327 P
6	S = 0.235 P	S = 0.588 P
7	S = 0.170 P	S = 0.425 P
8	S = 0.088 P	S = 0.220 P

NOTE
Correction factors apply to E and G outputs at 100% input (P = static pressure in 1,000 psi).

Section 5 Troubleshooting

Overview . . . . . **page 5-1**
Safety Messages . . . . . **page 5-1**
Smart Troubleshooting . . . . . **page 5-3**
Analog Troubleshooting . . . . . **page 5-10**

OVERVIEW

This section is set up into two parts: Smart and Analog.

Table 5-1 on page 5-3 provides summarized troubleshooting suggestions for the most common operating problems on Smart transmitters. Table 5-2 on page 5-10 provides similar troubleshooting suggestions for analog transmitters.

If you suspect a malfunction despite the absence of any diagnostic messages on the communicator display, follow the procedures described here to verify that transmitter hardware and process connections are in good working order. Always deal with the most likely and easiest-to-check conditions first.

SAFETY MESSAGES

Warnings (⚠)

Procedures and instructions in this section that raise potential safety issues are indicated by a warning symbol (⚠). Refer to the following warning messages before performing an operation preceded by this symbol.

⚠WARNING

- Isolate a failed transmitter from its pressure source as soon as possible. Pressure that may be present could cause death or serious injury to personnel if the transmitter is disassembled or ruptures under pressure.
- Explosions can cause death or serious injury. Do not remove the instrument cover in explosive atmospheres when the circuit is alive.
- Explosions can cause death or serious injury. Do not break the housing seal in explosive environments. Breaking the housing seal invalidates the explosion-proof housing rating.
- Process leaks can cause death or serious injury. An incorrectly installed backup ring can destroy the o-ring and cause process leaks. Install the backup ring using the following procedure.
- Exposure to hazardous substances can cause death or serious injury. If a hazardous substance is identified, a Material Safety Data Sheet (MSDS), required by law to be available to people exposed to specific hazardous substances, must be included with the returned goods.
- Explosions can cause death or serious injury. Do not disassemble the glass in the meter cover in explosive atmospheres. Disassembling the glass in the meter cover invalidates the explosion-proof meter rating.

⚠WARNING

- The following performance limitations may inhibit efficient or safe operation. Critical applications should have appropriate diagnostic and backup systems in place. Pressure transmitters contain an internal fill fluid. It is used to transmit the process pressure through the isolating diaphragms to the pressure sensing element. In rare cases, oil leak paths in oil-filled pressure transmitters can be created. Possible causes include physical damage to the isolator diaphragms, process fluid freezing, isolator corrosion due to an incompatible process fluid, etc. A transmitter with an oil fill fluid leak can continue to perform normally for a period of time. Sustained oil loss will eventually cause one or more of the operating parameters to exceed published specifications while a small drift in operating point output continues. Symptoms of advanced oil loss and other unrelated problems include:
    - Sustained drift rate in true zero and span or operating point output or both
    - Sluggish response to increasing or decreasing pressure or both
    - Limited output rate or very nonlinear output or both
    - Change in output process noise
    - Noticeable drift in operating point output
    - Abrupt increase in drift rate of true zero or span or both
    - Unstable output
    - Output saturated high or low

SMART TROUBLESHOOTING

Table 5-1. Troubleshooting Symptoms and Corrective Action.

Symptom	Potential Source	Corrective Action
Transmitter does not communicate with the HART Communicator	Loop Wiring	Check for a minimum of 250 Ω resistance between the power supply and the communicator connection. Check for adequate voltage to the transmitter. (If the communicator is connected and 250 Ω resistance is properly in the loop, then the loop requires a minimum of 17 volts to operate.) Check for intermittent shorts, open circuits, and multiple grounds. Specify the transmitter by tag number. See the display sequence below.
	I.S. Barrier	Refer to appropriate I.S. Barrier documentation.
High Output	Primary Element	Check for restrictions at primary element.
	Impulse Piping	Check for leaks or blockage. Ensure that blocking valves are fully open. Check for entrapped gas in liquid lines and for liquid in dry lines. Ensure that the density of fluid in impulse lines is unchanged. Check for sediment in transmitter process flanges.
	Power Supply	Check the power supply output voltage at the transmitter. It should be 12 to 45 V dc.
	Transmitter Electronics	Connect the HART Communicator and enter the XMTR TEST mode to determine any electronic failures. Make sure that post connectors are clean. If the electronics are still suspect, substitute new electronics.
	Sensing Element	The sensing element is not field repairable and must be replaced if found to be defective. See “Disassembly procedure” later in this section for instructions on disassembly. Check for obvious defects, such as a punctured isolating diaphragm or fill fluid loss, and contact your local Emerson Process Management representative.

Symptom	Potential Source	Corrective Action
Erratic Output	Loop Wiring	Check for adequate voltage to the transmitter. It should be 12 to 45 V dc with no load. Check for intermittent shorts, open circuits and multiple grounds. **⚠CAUTION** Do not use over 45 volts to check the loop, or damage to the transmitter electronics may result. Connect the HART Communicator and enter the LOOP TEST mode to generate signals of 4 mA, 20 mA, and user-selected values.
	Process Pulsation	Adjust the electronic damping with the HART Communicator.
	Transmitter Electronics	Connect the communicator and perform a transmitter test to determine any electronic failures. Make sure the post connectors are clean. If the electronics are still suspect, substitute new electronics.
	Impulse Piping	Check for entrapped gas in liquid lines and for liquid in dry lines.
Low Output or No Output	Primary Element	Check the insulation and condition of primary element. Note any changes in process fluid properties that may affect output.

Symptom	Potential Source	Corrective Action
	Loop Wiring	Check for adequate voltage to the transmitter. It should be 12 to 45 V dc. Check the milliamp rating of the power supply against the total current being drawn for all transmitters being powered. Check for shorts and multiple grounds. Check for proper polarity at the signal terminal. Check loop impedance. Check whether the transmitter is in multidrop mode, thus locking the output at 4 mA. Connect the communicator and perform a loop test. **⚠CAUTION** Do not use over 45 volts to check the loop, or damage to the transmitter electronics may result. Check wire insulation to detect possible shorts to ground.
	Impulse Piping	Ensure that the pressure connection is correct. Check for leaks or blockage. Check for entrapped gas in liquid lines. Check for sediment in the transmitter process flange. Ensure that blocking valves are fully open and that bypass valves are tightly closed. Ensure that density of the fluid in the impulse piping is unchanged.
	Transmitter Electronics	Connect the communicator and check the sensor limits to ensure calibration adjustments are within the sensor range. Connect the communicator and perform a transmitter test to determine electronics failure. Make sure the post connectors are clean. If the electronics are still suspect, substitute new electronics.
	Sensing Element	The sensing element is not field repairable and must be replaced if found to be defective. See “Disassembly procedure” later in this section for instructions on disassembly. Check for obvious defects, such as punctured isolating diaphragm or fill fluid loss, and contact your local Emerson Process Management representative.
Transmitter Does Not Characterize Properly	Pressure Source/Correction	Check for restrictions or leaks. Check for proper leveling or zeroing of the pressure source. Check weights/gauge to ensure proper pressure setting. Determine if the pressure source has sufficient accuracy. (The pressure source should be at least three times more accurate that the Rosemount 1151 Smart.)
Transmitter Does Not Characterize Properly	mA Meter	Determine if the mA meter is functioning properly.
	Power Supply	Check the power supply output voltage at transmitter. It should be 12 to 45 V dc with no load. Check for a minimum of 250 Ω resistance between the HART Communicator and the power supply.
	Transmitter Electronics	Connect the communicator and perform a transmitter test to determine any electronic failures. Make sure the post connectors are clean. If electronics are still suspect, substitute with new electronics.
	Sensing Element	The sensing element is not field repairable and must be replaced if found to be defective. See “Disassembly procedure” later in this section for instructions on disassembly. Check for obvious defects, such as punctured isolating diaphragm or fill fluid loss, and contact your local Emerson Process Management representative.

Disassembly Procedure

⚠ Read the following information carefully before you disassemble a transmitter. General information concerning the process sensor body, electrical housing, and a procedure for their separation follow.
Figure 5-1 shows an exploded view of the transmitter.

Figure 5-1. Rosemount 1151 Smart Pressure Transmitter Exploded View.

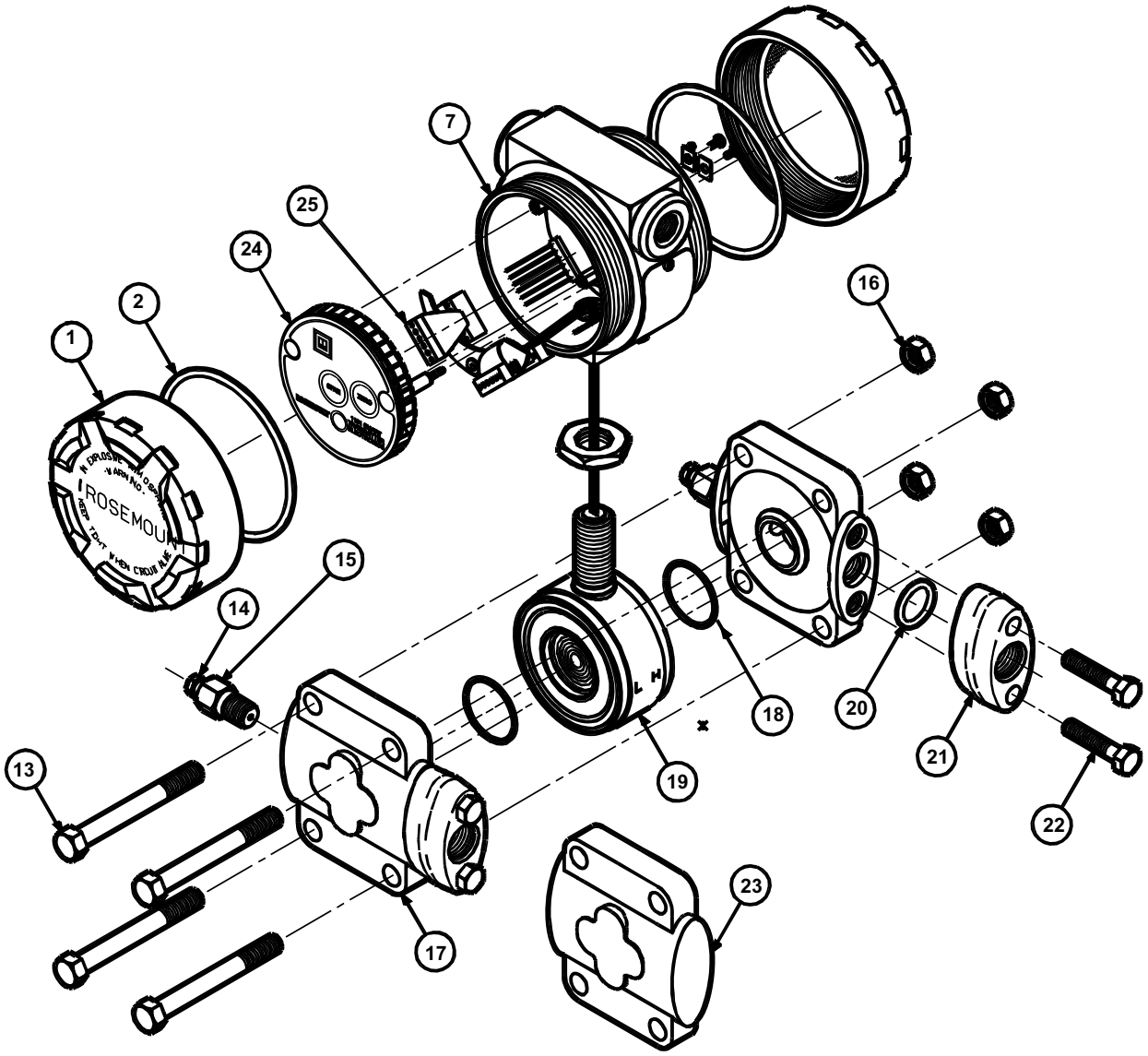

Process Sensor Body

Be aware of the following:

- The transmitter should be removed from service before disassembling the sensor body.
- Process flanges can be detached by removing the four large bolts.

⚠CAUTION

Do not scratch, puncture, or depress the isolating diaphragms. Damaging the isolating diaphragms can inhibit transmitter performance.

- Isolating diaphragms may be cleaned with a soft rag, mild cleaning solution, and clear water rinse.

⚠CAUTION

Do not use chlorine or acid solutions to clean the diaphragms. Damaging the isolating diaphragms can inhibit transmitter performance.

- Flange adapters and process flanges may be rotated or reversed for mounting convenience.

Electrical Housing

⚠ Electrical connections are located in a compartment identified as TERMINAL SIDE on the nameplate. The signal and test terminals are accessible by unscrewing the cover on the terminal side. The terminals are permanently attached to the housing and must not be removed, or the housing seal between compartments will be broken.

To remove the smart electronics, refer to Appendix 6: Retrofitting the Rosemount 1151 Transmitter, and reverse the installation sequence described in steps 10 through 15.

Removing the Sensor from the Electrical Housing

1. Unscrew the cover on the field terminal side of the transmitter.
2. Disconnect the power source from the transmitter.
3. Remove the smart electronics and header board.
4. Loosen the lock nut.

⚠CAUTION

Do not damage the isolating diaphragms when unscrewing the sensor module. Damaging the isolating diaphragms can inhibit transmitter performance.

5. The threaded connection has a sealing compound on it and will initially be tight. Unscrew the sensing module from the electronics housing, being careful not to damage the sensor leads. Carefully pull the header assembly board through the hole.

The sensing module is a welded assembly and cannot be further disassembled.

Reassembly Procedure

Follow these procedures carefully to ensure proper reassembly.

Preliminary Precaution

Inspect all O-rings and replace if necessary. Lightly grease with silicone oil to ensure a good seal. Use halocarbon grease for inert fill options.

Connecting the Electrical Housing to the Sensor

⚠ 1. Insert the header assembly board through the electronics housing.
2. Use a sealing compound (Loctite® 222—Small Screw Threadlocker) on the threads of the sensor module to ensure a watertight seal on the housing.
3. Screw the sensor module into the electrical housing making sure that at least five threads are engaged. Be careful not to damage or twist the sensor leads.
4. Align the sensor module with the high and low pressure sides oriented for convenient installation.
5. Tighten the lock nut.

Electrical Housing

The smart electronics and header board can easily be installed in the electrical housing. Steps 10 through 15 in Section 6 Retrofitting the Rosemount 1151 Transmitter describe this assembly.

⚠CAUTION

An already characterized transmitter requires recharacterization whenever the sensor module or smart electronics are replaced. Failure to recharacterize can inhibit transmitter performance. (See Appendix 6: Retrofitting the Rosemount 1151 Transmitter.)

Process Sensor Body

All HP transmitters and GP Range 9 and 10 transmitters require metal backup rings to ensure O-ring integrity. Figure 5-2 illustrates the position and orientation of the metal backup rings. (Backup rings are not required on AP or DP transmitters or GP Range 3-8 transmitters.)

NOTE
Handle the backup ring carefully, as it is fragile. Examine the ring carefully. One side is beveled, while the other side is flat. The flat side appears more shiny when viewed from above.

1. Clean the sealing surfaces carefully.
2. Place the module on a flat surface, “H” side up.
3. Place the greased flange O-ring around the isolator and push it into the cavity.

Figure 5-2. Detail Showing Process O-ring and Backup Ring Installation of Module Seal for Rosemount 1151HP and GP Range 9 (GP Range 10 Requires Only One O-ring and Backup O-ring).

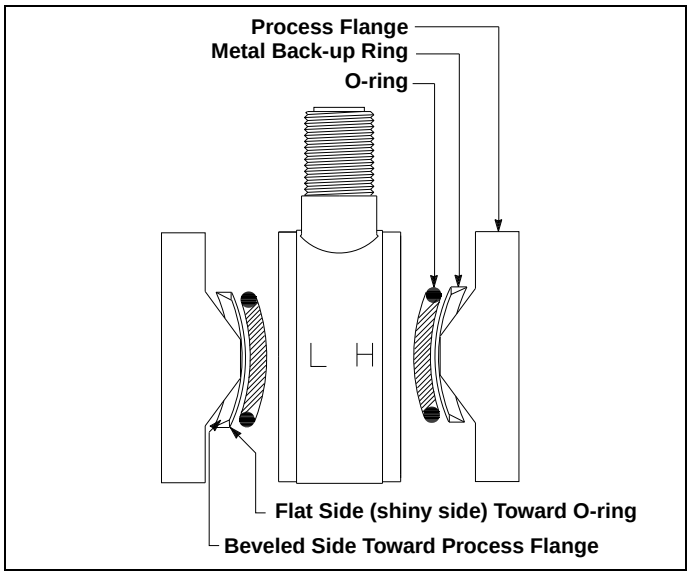

⚠ 4. For all HP transmitters and GP transmitters Ranges 9 and 10, place the backup ring, shiny side down, on top of the O-ring. This places the flat side of the backup ring against the O-ring.

5. Carefully place the flange on top of the module, beveled side down so that the beveled flange surface mates with the beveled surface of the backup ring.
6. Keeping the flange and module together, turn them over so the “L” side is up. Repeat Steps 3 through 5. As before, the flat side of the backup ring must rest against the O-ring.
7. Insert the four flange bolts.
8. Tighten the nuts finger tight, making sure the flanges remain parallel. The transmitter may now be moved without disturbing the O-rings.
   a. Tighten one bolt until the flanges seat.
   b. Torque down the bolt diagonally across.
   c. Torque down the first bolt.
   d. Torque down the two remaining bolts.
   e. Inspect the flange-to-sensor seating to be sure that the flanges are not cocked.
   f. Check that all four bolts are tightened to approximately 33 ft.-lb (39 Nm).
9. Recalibrate the transmitter.

Optional Plug-in Meters

The optional indicating meters available for Rosemount 1151 transmitters are listed in Section A: Reference Information. Please be aware of the following information while assembling the meter assembly. Refer to Table A-11 on page A-23 for part references.

- The display may be rotated in 90-degree increments for convenient reading.
- ⚠ If the display cover is removed for any reason, be sure the O-ring is in place between the cover and housing before reattachment. To maintain an explosion-proof condition, the glass in the meter cover should not be disassembled for any reason.

Sensor Module Checkout

The sensor module is not field repairable and must be replaced if found to be defective. If no obvious defect is observed (such as a punctured isolating diaphragm or fill fluid loss), the sensor module can be checked as follows.

1. Carefully pull the header assembly board off of the post connectors. Rotate the board 180 degrees about the axis formed by the connecting leads. The sensor module and electronics housing can remain attached for checkout.
2. Check internal diode loops, forward and reverse bias: one loop is on pins one and two, the other is on pins three and four. See Figure 5-3. Loop resistance values should be nearly equal.

NOTE
Do not touch the transmitter housing when checking resistances, or a faulty reading can result.

3. Check the resistance between the sensor module housing and pins one through four. This checks the resistance between both capacitor plates and the sensing diaphragm, which is grounded to the housing. This resistance should be greater than 10 MΩ.
4. Check the resistance between pin eight and the sensor module to ensure that the module is grounded. Resistance should be zero.

NOTE
The above procedure does not completely test the sensor module. If circuit board replacement does not correct the abnormal condition, and no other problems are obvious, replace the sensor module.

Figure 5-3. Header Board Connections.

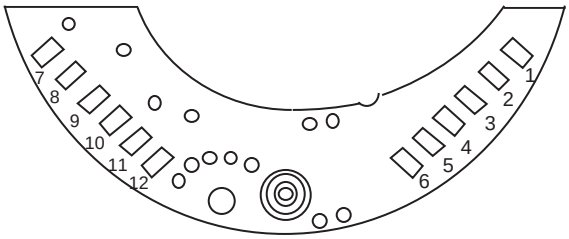

(COMPONENT SIDE UP)

ANALOG TROUBLESHOOTING

Hardware Diagnostics

If you suspect a malfunction, see Table 5-2 on page 5-10 to verify that transmitter hardware and process connections are in good working order. Under each of the five major symptoms, you will find specific suggestions for solving the problem. Always deal with the most likely and easiest to check conditions first.

⚠WARNING

Isolate a failed transmitter from its pressure source as soon as possible. Pressure that may be present could cause death or serious injury to personnel if the transmitter is disassembled or ruptures under pressure.

Table 5-2. Troubleshooting Symptoms and Corrective Action.

Symptom	Potential Source	Corrective Action
High Output	Primary Element	Check for restrictions at primary element.
	Impulse Piping	Check for leaks or blockage. Ensure that blocking valves are fully open. Check for entrapped gas in liquid lines and for liquid in dry lines. Ensure that the density of fluid in impulse lines in unchanged. Check for sediment in transmitter process flanges.
	Power Supply	Check the power supply output voltage at the transmitter.
	Transmitter electronics	Make sure that post connectors are clean. If the electronics are still suspect, substitute new electronics.
	Sensing Element	The sensing element is not field repairable and must be replaced if found to be defective. See “Transmitter Disassembly” later in this section for instructions on disassembly. Check for obvious defects, such as punctured isolating diaphragm or fill fluid loss, and contact your local Emerson Process Management representative.
Erratic Output	Loop Wiring	Check for adequate voltage to the transmitter. Check for intermittent shorts, open circuits and multiple grounds. **⚠CAUTION** Do not use higher than the specified voltage to check the loop, or damage to the transmitter electronics may result.
	Process Pulsation	Adjust Damping
	Transmitter Electronics	Make sure the post connectors are clean. If the electronics are still suspect, substitute new electronics.
	Impulse Piping	Check for entrapped gas in liquid lines and for liquid in dry lines.

Symptom	Potential Source	Corrective Action
Low Output or No Output	Primary Element	Check the insulation and condition of primary element. Note any changes in process fluid properties that may affect output.
	Loop Wiring	Check for adequate voltage to the transmitter. Check the milliamp rating of the power supply against the total current being drawn for all transmitters being powered. Check for shorts and multiple grounds. Check for proper polarity at the signal terminal. Check loop impedance. Check whether the transmitter is in multidrop mode, thus locking the output at 4 mA. **⚠CAUTION** Do not use higher than the specified voltage to check the loop, or damage to the transmitter electronics may result. Check wire insulation to detect possible shorts to ground.
	Impulse Piping	Ensure that the pressure connection is correct. Check for leaks or blockage. Check for entrapped gas in liquid lines. Check for sediment in the transmitter process flange. Ensure that blocking valves are fully open and that bypass valves are tightly closed. Ensure that density of the fluid in the impulse piping is unchanged.
	Sensing Element	The sensing element is not field repairable and must be replaced if found to be defective. See “Transmitter Disassembly” later in this section for instructions on disassembly. Check for obvious defects, such as punctured isolating diaphragm or fill fluid loss, and contact your local Emerson Process Management representative.
Transmitter Does Not Calibrate Properly	Pressure Source/Correction	Check for restrictions or leaks. Check for proper leveling or zeroing of the pressure source. Check weights/gauge to ensure proper pressure setting. Determine if the pressure source has sufficient accuracy.
	Meter	Determine if the meter is functioning properly.
	Power Supply	Check the power supply output voltage at transmitter.
	Transmitter Electronics	Make sure the post connectors are clean. If electronics are still suspect, substitute with new electronics.
	Sensing Element	The sensing element is not field repairable and must be replaced if found to be defective. See “Transmitter Disassembly” later in this section for instructions on disassembly. Check for obvious defects, such as punctured isolating diaphragm or fill fluid loss, and contact your local Emerson Process Management representative.

Transmitter Disassembly

Read the following information carefully before you disassemble a transmitter. General information concerning the process sensor body, electrical housing, and a procedure for their separation follow. Figure 5-4 shows an exploded view of the transmitter.

⚠WARNING

The following performance limitations may inhibit efficient or safe operation. Critical applications should have appropriate diagnostic and backup systems in place.

Pressure transmitters contain an internal fill fluid. It is used to transmit the process pressure through the isolating diaphragms to the pressure sensing element. In rare cases, oil leak paths in oil-filled pressure transmitters can be created. Possible causes include: physical damage to the isolator diaphragms, process fluid freezing, isolator corrosion due to an incompatible process fluid, etc.

A transmitter with an oil fill fluid leak can continue to perform normally for a period of time. Sustained oil loss will eventually cause one or more of the operating parameters to exceed published specifications while a small drift in operating point output continues. Symptoms of advanced oil loss and other unrelated problems include:

- Sustained drift rate in true zero and span or operating point output or both
- Sluggish response to increasing or decreasing pressure or both
- Limited output rate or very nonlinear output or both
- Change in output process noise
- Noticeable drift in operating point output
- Abrupt increase in drift rate of true zero or span or both
- Unstable output
- Output saturated high or low

⚠WARNING

Explosion can cause death or serious injury. Do not remove the instrument cover in explosive atmospheres when the circuit is alive.

⚠WARNING

Explosions can cause death or serious injury. Do not break the housing seal in explosive environments. Breaking the housing seal invalidates the explosion-proof housing rating.

Electrical connections are located in a compartment identified as TERMINAL SIDE on the nameplate. The signal and test terminals are accessible by unscrewing the cover on the terminal side. The terminals to the housing must not be removed, or the housing seal between compartments will be broken. (Not applicable to R1 Option.)

Process Sensor Body Removal

Be aware of the following guidelines:

- The transmitter should be removed from service before disassembling the sensor body.
- Process flanges can be detached by removing the four large bolts.

⚠CAUTION

Do not scratch, puncture, or depress the isolating diaphragms. Damaging the isolating diaphragms can inhibit transmitter performance.

- Isolating diaphragms may be cleaned with a soft rag, mild cleaning solution, and clear water rinse.

⚠CAUTION

Do not use chlorine or acid solutions to clean the diaphragms. Damaging the isolating diaphragms can inhibit transmitter performance.

- Flange adapters and process flanges may be rotated or reversed for mounting convenience.

Figure 5-4. Differential Pressure (DP) Transmitter Exploded View.

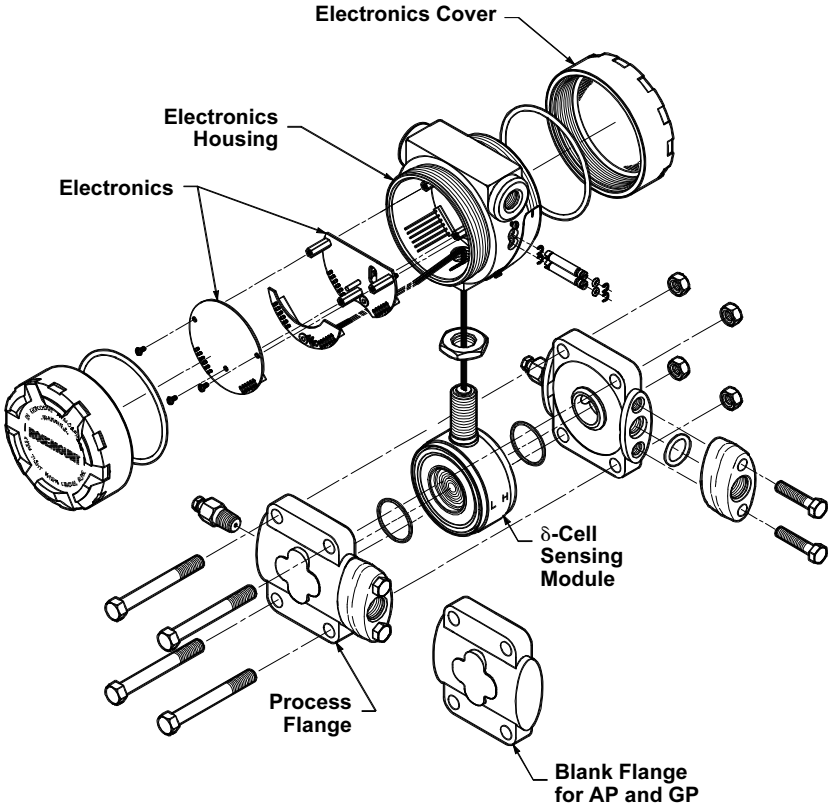

Removing the Sensor from the Electrical Housing

- Disconnect the power source from the transmitter.
- Unscrew the cover on the terminal side of the transmitter.
- Remove the screws and unplug the electronics; see Figure 5-5.
- Loosen the lock nut.
- Remove the standoffs.

⚠CAUTION

Do not damage the isolating diaphragms when unscrewing the sensor module. Damaging the isolating diaphragms can inhibit transmitter performance.

1. Unscrew the sensing module from the electronics housing, being careful not to damage the sensor leads. Carefully pull the header assembly board through the hole. The threaded connection has a sealing compound on it and must be broken loose.

The sensing module is a welded assembly and cannot be further disassembled.

Figure 5-5. Removal of Electronics.

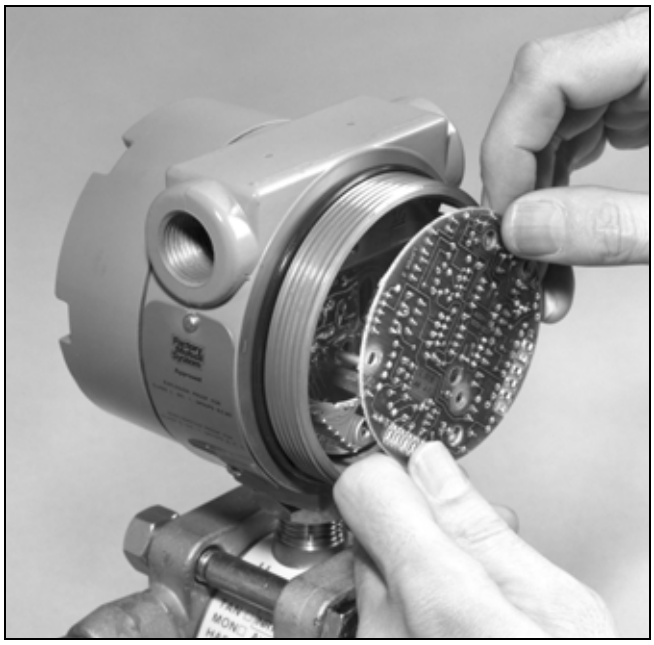

Sensor Module Checkout

The sensor module is not field repairable and must be replaced if found to be defective. If no obvious defect is observed (such as a punctured isolating diaphragm or fill fluid loss), the sensor module can be checked as follows.

1. Carefully pull the header assembly board off of the post connectors. Rotate the board 180 degrees about the axis formed by the connecting leads. The sensor module and electronics housing can remain attached for checkout.

NOTE
Do not touch the transmitter housing when checking resistances, or a faulty reading can result.

2. Check the resistance between the sensor module housing and pins one through four. This checks the resistance between both capacitor plates and the sensing diaphragm, which is grounded to the housing. This resistance should be greater than 10 MΩ.
3. Check the resistance between pin eight and the sensor module to ensure that the module is grounded. Resistance should be zero.

NOTE
The above procedure does not completely test the sensor module. If circuit board replacement does not correct the abnormal condition, and no other problems are obvious, replace the sensor module.

Figure 5-6. Header Board Connections.

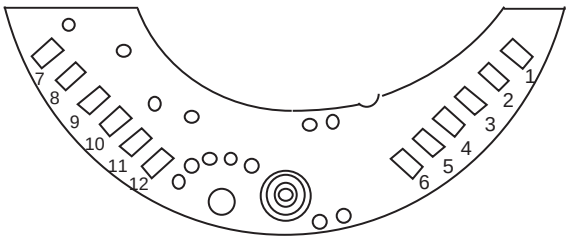

(COMPONENT SIDE UP)

Reassembly Procedure

Follow these procedures carefully to ensure proper reassembly.

Preliminary Precaution

Inspect all O-rings and replace if necessary. Lightly grease with silicone oil to ensure a good seal. Use halocarbon grease for inert fill options.

⚠WARNING

Explosions can cause death or serious injury. Both transmitter covers must be fully engaged to meet explosion-proof requirements.

Connecting the Electrical Housing to the Sensor

1. Insert the header assembly board through the electronics housing.
2. Use a sealing compound (Loctite® *222* - Small Screw Threadlocker) on the threads of the sensor module to ensure a watertight seal on the housing.
3. Screw the sensor module into the electrical housing making sure that the threads are fully engaged. Be careful not to damage or twist the sensor leads.
4. Align the sensor module with the high and low pressure sides oriented for convenient installation.
5. Tighten the lock nut.

Backup Ring and O-ring Installation

All HP transmitters and GP Range 9 and 0 transmitters require metal backup rings to ensure O-ring integrity. Figure 5-7 on page 5-16 illustrates the position and orientation of the metal backup rings. (Backup rings are not required on AP or DP transmitters or GP Range 3-8 transmitters.)

Figure 5-7. Detail Showing Process O-ring and Backup Ring Installation of Module Seal for Rosemount 1151HP and GP Range 9 (GP Range 0 Requires Only One O-ring and Backup O-ring).

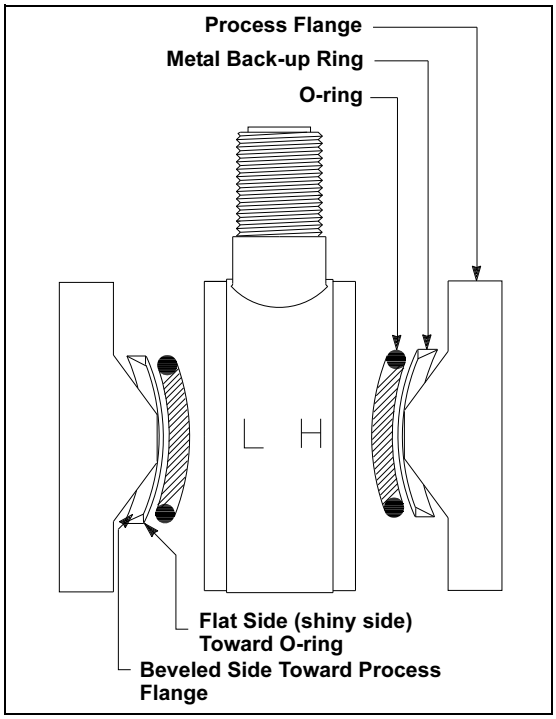

NOTE
Handle the backup ring carefully, as it is fragile. Examine the ring carefully. One side is beveled, while the other side is flat. The flat side appears more shiny when viewed from above.

1. Clean the sealing surfaces carefully.
2. Place the module on a flat surface, “H” side up.
3. Place the greased flange O-ring around the isolator and push it into the cavity.

⚠WARNING

Process leaks can cause death or serious injury. An incorrectly installed backup ring can destroy the o-ring and cause process leaks. Install the backup ring using the following procedure.

4. For all HP transmitters and GP transmitters Ranges 9 and 0, place the backup ring, shiny side down, on top of the O-ring. This places the flat side of the backup ring against the O-ring.
5. Carefully place the flange on top of the module, beveled side down so that the beveled flange surface mates with the beveled surface of the backup ring.
6. Keeping the flange and module together, turn them over so the “L” side is up. Repeat Steps 3 through 5. As before, the flat side of the backup ring must rest against the O-ring.
7. Insert the four flange bolts.
8. Tighten the nuts finger tight, making sure the flanges remain parallel. The transmitter may now be moved without disturbing the O-rings.
   a. Tighten one bolt until the flanges seat.
   b. Torque down the bolt diagonally across.
   c. Torque down the first bolt.
   d. Torque down the two remaining bolts.
   e. Inspect the flange-to-sensor seating to be sure that the flanges are not cocked.
   f. Check that all four bolts are tightened to approximately 33 ft-lb (39 Nm).
9. Recalibrate the transmitter.

NOTE
If the Rosemount 1151 Range 3 transmitter sensor module serial number is below 2,900,000, it must be temperature cycled whenever changing or rebolting flanges.

Optional Plug-in Meters

The optional indicating meters available for Rosemount 1151 transmitters are listed in Appendix A: Reference Information. Please be aware of the following information while assembling the meter assembly. Refer to Table A-11 on page A-23 for part references.

- The meter may be rotated in 90-degree increments for convenient reading.

⚠WARNING

Explosions can cause death or serious injury. Do not disassemble the glass in the meter cover in explosive atmospheres. Disassembling the glass in the meter cover invalidates the explosion-proof meter rating.

- If the meter cover is removed for any reason, be sure the O-ring is in place between the cover and housing before reattachment. To maintain an explosion-proof condition, the glass in the meter cover must not be disassembled for any reason.

Section 6 Retrofitting the Rosemount 1151 Transmitter

Overview . . . . . page 6-1
Safety Messages . . . . . page 6-1
Retrofitting Overview . . . . . page 6-2
Removing the Analog Electronics Assembly . . . . . page 6-2
Installing the Smart Retrofit Kit . . . . . page 6-10
Characterization . . . . . page 6-12

OVERVIEW

This section describes how the Rosemount Smart Retrofit Kit can be used to retrofit a Rosemount 1151AP, DP, GP, HP, or LT transmitter with 4-20 mA dc linear or square root output.

NOTE
The Rosemount 1151DR (Draft Range) Transmitter cannot be retrofitted with the 1151-0935-0001 Retrofit Kit. In addition, Rosemount 1151 transmitters with serial numbers below 10,000 and Rosemount 1151 AP Range Code 4 Transmitters with serial numbers between 1,318,500 and 1,690,000 may experience some degradation in performance from temperature effect if retrofitted. Therefore, retrofitting of these transmitters is not recommended.

SAFETY MESSAGES

Warnings (⚠)

Procedures and instructions in this section that raise potential safety issues are indicated by a warning symbol (⚠). Refer to the following warning messages before performing an operation preceded by this symbol.

⚠WARNING

- Explosions can result in serious injury or death. Before connecting a communicator in an explosive atmosphere, make sure the instruments in the loop are installed in accordance with intrinsically safe or nonincendiary field wiring practices.
- Toxic processes can result in serious injury or death. Transmitter can contain residue process. Use appropriate safety precautions when opening drain vents or disconnecting a transmitter from a process.
- DO NOT attempt to loosen drain vent valves or disconnect the transmitter from the process without taking precautionary measures.
- Install and tighten all four process adapter bolts or drain vent valves before applying pressure.
- Both transmitter covers must be fully engaged to meet explosion-proof requirements.

RETROFITTING OVERVIEW

The procedure for retrofitting a transmitter is divided into three parts:

1. Removing the analog electronics assembly.
2. Installing the smart electronics kit.
3. Characterizing the retrofitted transmitter.

Two tools are required to remove the analog electronics and to install the smart electronics:

- Flat-bladed screwdriver
- 1/4-in. nut driver or wrench

The following equipment is needed to characterize the retrofitted transmitter:

- A HART Communicator
- An accurate pressure source, preferably 0.025% accuracy or better
- A 250 ohm resistor

The Smart Retrofit Kit, P/N 01151-0935-0001, contains the following items:

Quantity	Description
1	Smart electronic assembly
1	Electronics cover
1	Cover O-ring
2	Terminal eyelets
2	Board spacers
2	Standoffs

REMOVING THE ANALOG ELECTRONICS ASSEMBLY

⚠CAUTION

Use proper earth grounding techniques when handling the smart electronics assembly. The smart electronics assembly is potentially sensitive to electric static discharge.

Confirm the output code of the Rosemount 1151 is analog (4-20 mA). It will have an “E” in the eighth character in the model number on the transmitter nameplate.

Example: (1151DP4 **E** 12M1)

The following steps describe how to remove the analog electronics assembly from transmitters with “E” output code for smart retrofitting. However, they can also be used as guidelines for retrofitting transmitters with “A” or “C” output codes. This process requires opening the electronics compartment on the circuit side of the transmitter and removing the amplifier or amplifier/squaring assembly, standoffs, and the calibration board.

NOTE
Numbers in parentheses indicate parts shown in Figure 6-1.

Figure 6-1. Rosemount 1151 Analog Electronics.

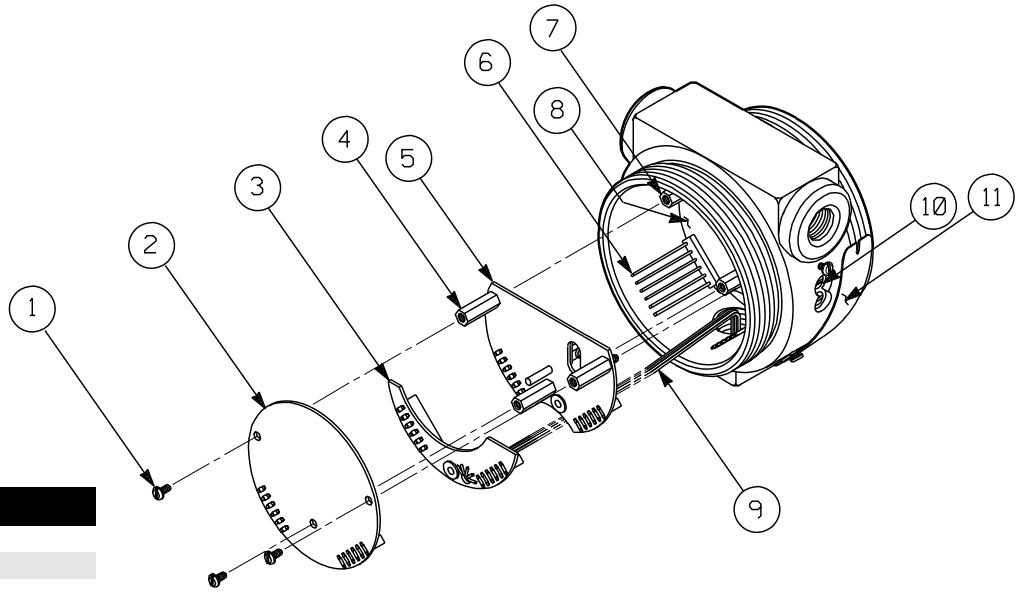

LINEAR OUTPUT

Ref. No.	Part Description
1	Retainer Screws (Linear)
2	Amplifier Board (Linear)
3	Header Board Assembly
4	Standoff Screws (Linear)
5	Calibration Board (Linear)
6	Bayonet Connector Pins
7	Standoff Screws (Linear)
8	Sensor Module Electronics
9	Wiring
10	Zero and Span Adjust Screws
11	Housing Cover

1. Ensure that power is removed from the transmitter before beginning the retrofit procedure.
2. ⚠ Remove the cover from the circuit side of the transmitter.
3. Remove the three retainer screws (1 or 12).

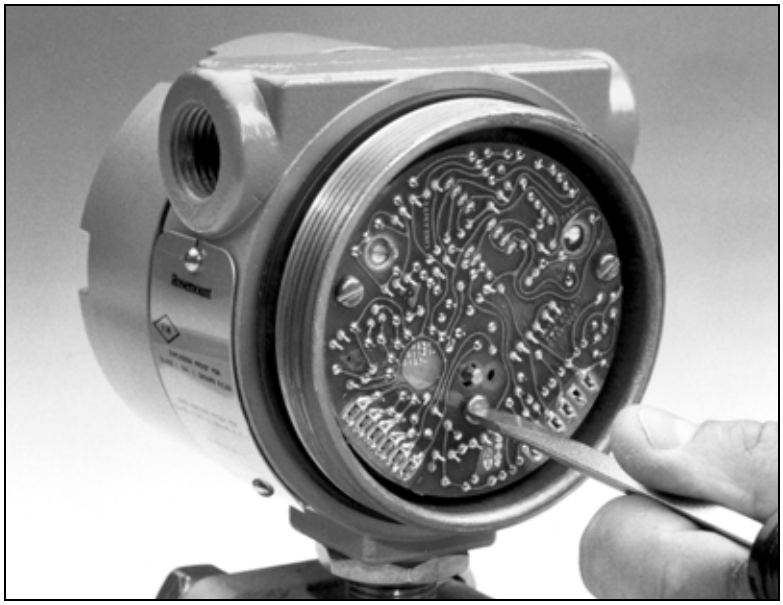

4. Pull the amplifier board (2) or amplifier/squaring assembly (13) directly off the bayonet connectors (6).

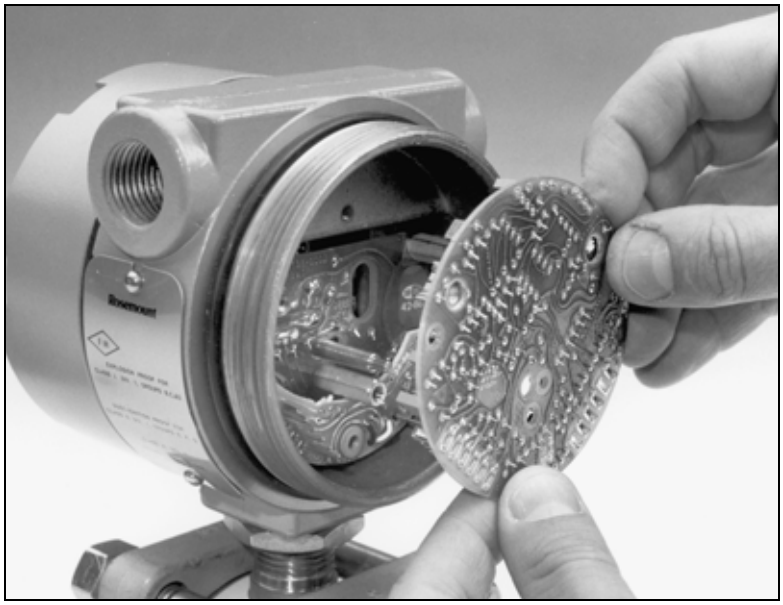

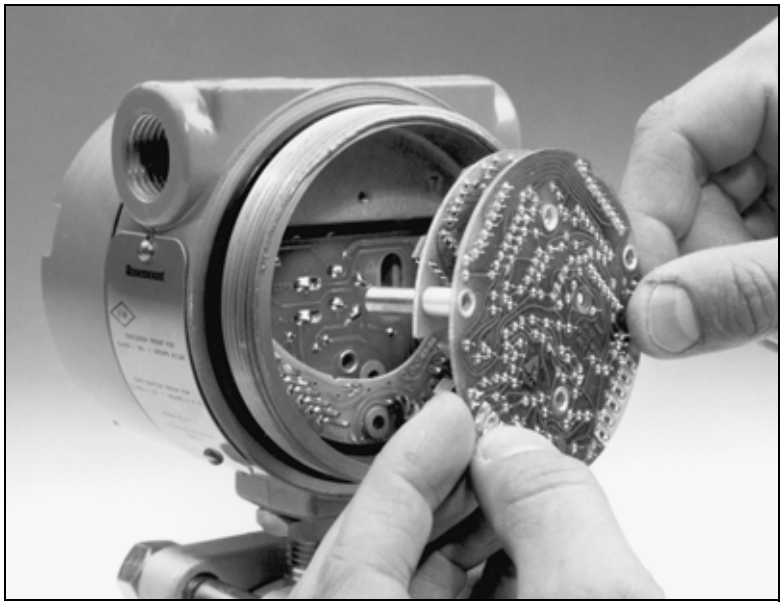

5. Pull the header board assembly (3) off the bayonet connectors. The header board must be reinserted. Do not cut the wires (9) or remove the header board.

6. If the transmitter has linear output electronics, remove the three standoffs (4). Use a 1/4-in. nut driver or wrench.

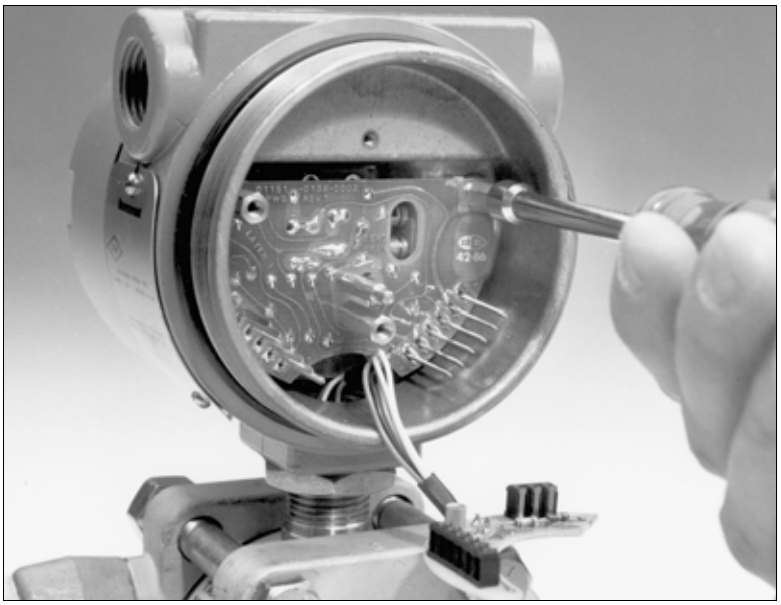

7. Align the zero and span adjust screws (10) so that the potentiometer blades are perpendicular to the board.

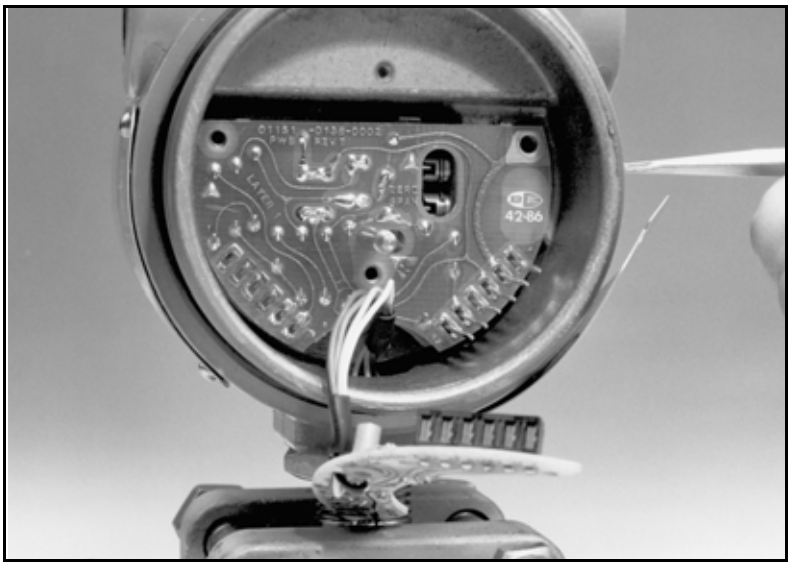

8. For linear output models, grip the calibration board (5) by the interface pin. (Removing the calibration board disables the conventional zero and span screws.)

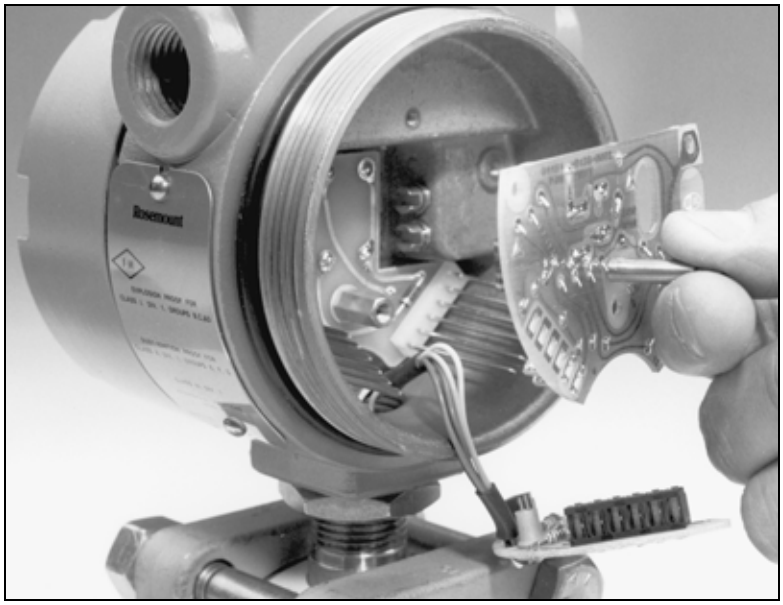

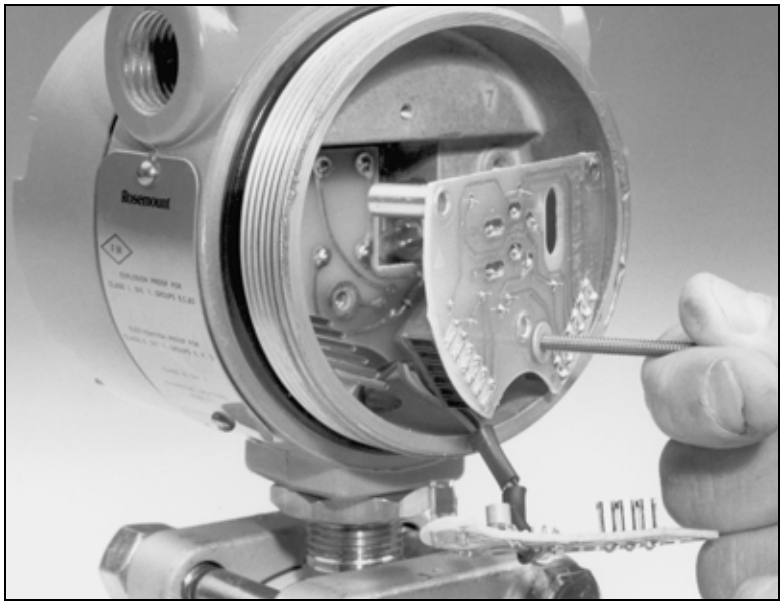

Insert the standoffs (7), if necessary. The transmitter is now ready to receive the plug-in smart electronics assembly.

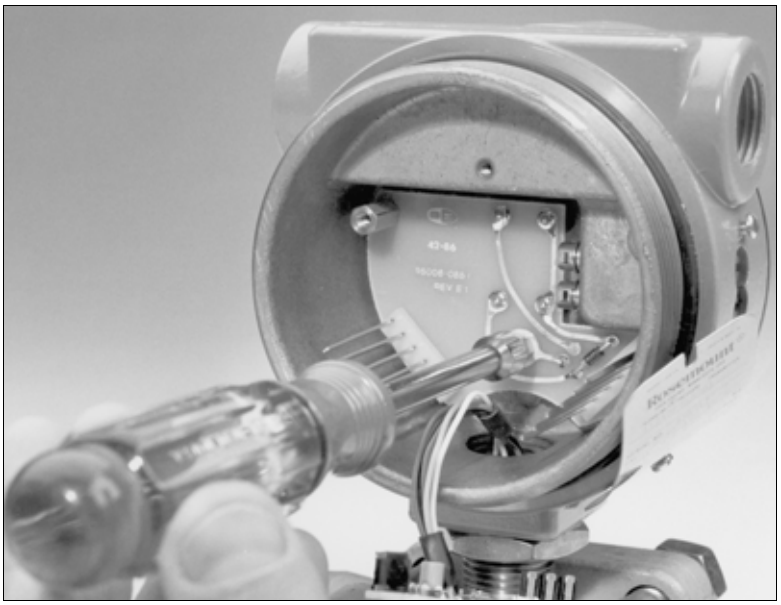

INSTALLING THE SMART RETROFIT KIT

Installing the smart retrofit electronics kit in the transmitter requires installing plastic spacers to accommodate the retrofit kit and securing the retrofit electronics. After the retrofit kit has been installed, it is necessary to attach eyelets to the terminal side of the transmitter. The eyelets enable hook-up with a HART-based communicator (see Figure 6-2).

⚠CAUTION

Use proper earth grounding techniques when handling the smart electronics assembly. The smart electronics assembly is potentially sensitive to electric static discharge.

Figure 6-2. Spacer Assembly.

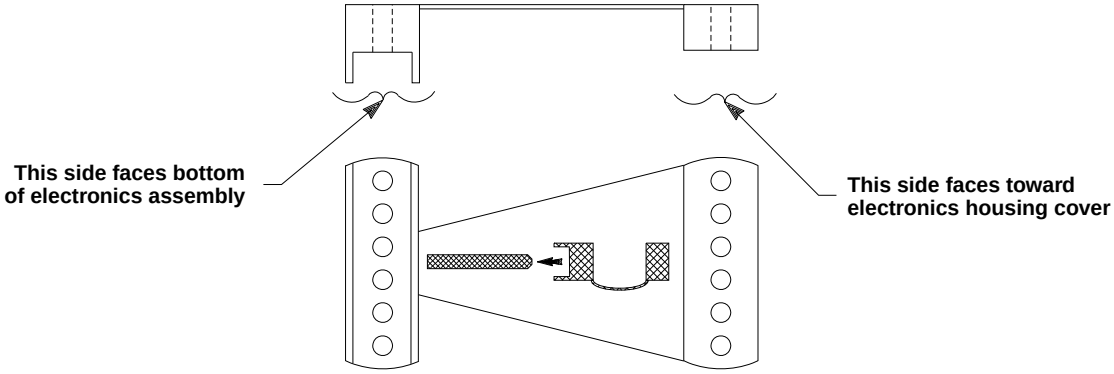

1. Slide the bottom half of one spacer over one of the rows of bayonet connectors. Then repeat the procedure for the other row.

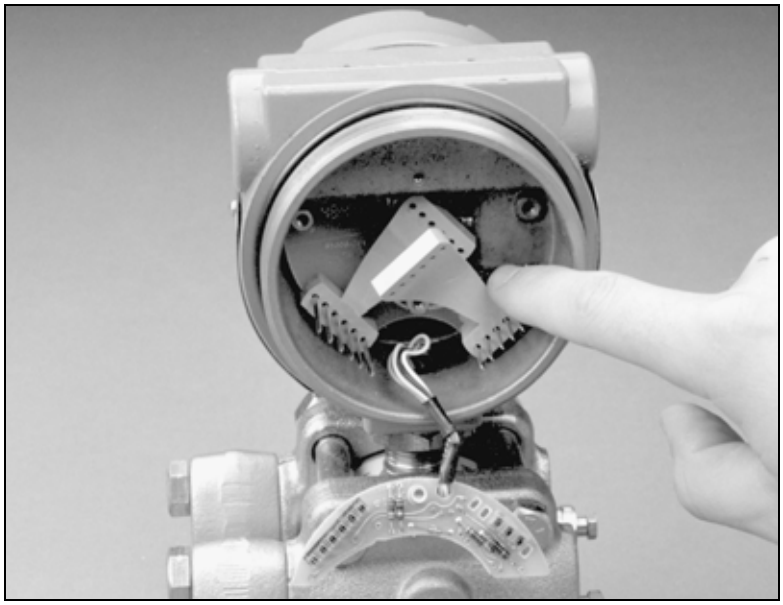

2. Align the header board with the bayonet connector pins, and slide the header board halfway down the pins.

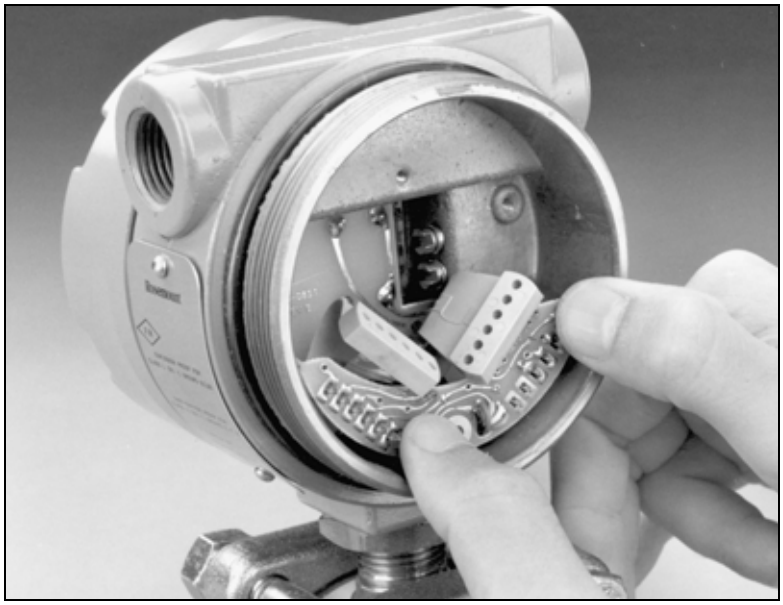

3. Align the tops of both spacers with the bayonet connector pins, and slide them down the pins, pushing firmly on both the spacers and the header board to seat the board.

4. Align the smart electronics assembly with the bayonet connector pins, making sure all pins line up with the proper receptacles. Next, push the assembly slowly inward until it is fully seated.

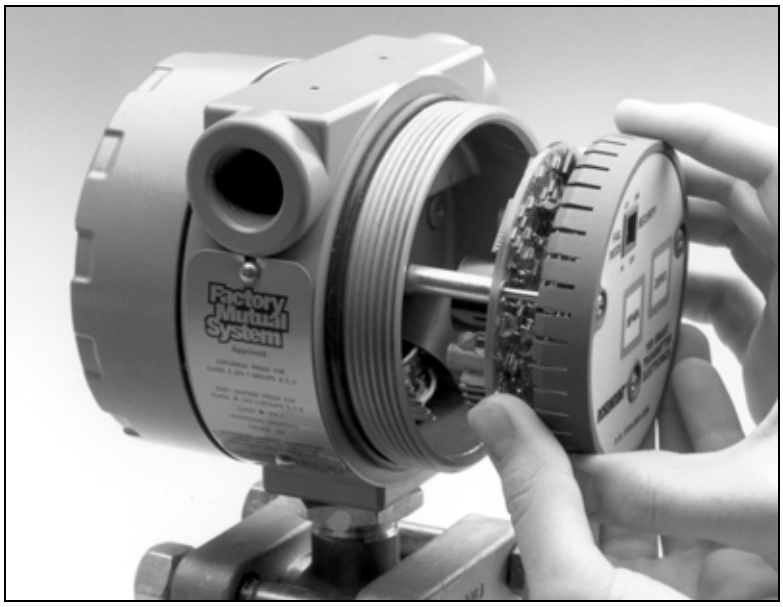

5. Tighten the three captive screws on the smart electronics assembly to secure it in place.
6. ⚠ Attach the electronics cover provided in the smart retrofit kit, and tighten securely.
7. Remove the cover from the terminal side of the transmitter.

Two eyelets that fit under the + and – signal terminal screws are provided to facilitate connections to HART-based communicator. The signal terminal is the upper block as indicated on the transmitter housing.

8. ⚠ Remove the signal terminal + and – screws. Attach an eyelet to each screw, and reinsert the screws.
9. Reattach the cover on the terminal side, and tighten securely.

CHARACTERIZATION

The transmitter is now ready to be characterized. Characterization is a one-time calibration of the sensor in the Rosemount 1151 Transmitter. During characterization, known pressures are applied to the sensor, and corresponding digital values are stored in the EEPROM located in the smart transmitter electronics. The microprocessor uses these values to make linearization corrections. The digital-to-analog converter then converts the corrected digital signal into a 4–20 mA dc output. The Rosemount 1151 Transmitter will stay in high alarm (approximately 22 mA output) until the characterization sequence is completed.

NOTE
The transmitter must be re-characterized if either the sensor module or the smart transmitter electronics are repaired or replaced.

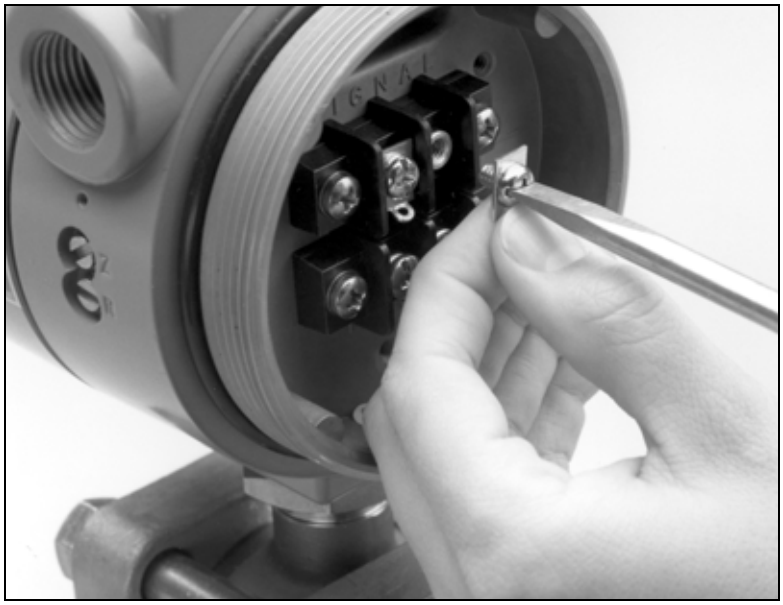

Before Characterizing the Transmitter

1. Be prepared to answer the following questions:
   - Module type (AP, DP, HP, LT) on the transmitter S/N tag?
   - Module range on the transmitter module tag?
   - Pressure units on your pressure source?
   - Serial number on the transmitter S/N tag?
2. ⚠ Connect the pressure source.
3. ⚠ Remove the terminal side cover of the Rosemount 1151 Pressure Transmitter.
4. ⚠ Connect power supply leads to the terminal block. Apply power to the transmitter.

NOTE
Failure to use accurate equipment may result in a transmitter that cannot meet its accuracy specification.

Characterizing with a HART Communicator

⚠ 1. Connect the HART communicator electrical connections to the SIGNAL terminal block. The HART Communicator connections are not polarity sensitive.
2. Turn the HART Communicator on by pushing the I/O button.
3. Follow the HART Communicator menus to characterize:
   - Device setup
   - Detailed setup
   - Sensor
   - Pressure sensor
   - Sensor service
   - Characterize
4. Follow the instructions on the screen.
5. Verify the new transmitter configuration:
   - Tag
   - Range points
   - Linear/square root
   - Damping
6. Verify that the Fail Safe Mode Switch and the Transmitter Security Switch on the smart electronics circuit board are correct.
7. Attach the electronics cover and tighten.
8. Put the transmitter back in service.

Appendix A Reference Information

Performance Specifications . . . . . **page A-1**
Functional Specifications . . . . . **page A-4**
Physical Specifications . . . . . **page A-9**
Dimensional Drawings . . . . . **page A-12**
Ordering Information . . . . . **page A-17**
1151 Parts List . . . . . **page A-23**
1151LT Parts List . . . . . **page A-29**
Display Specifications . . . . . **page A-35**

PERFORMANCE SPECIFICATIONS

(Zero-based calibrated ranges, reference conditions, silicone oil fill, 316 SST isolating diaphragms.)

Accuracy

Output	Model	Accuracy Specification and Span
Output Code S	Ranges 3 through 8 for DP and GP; Ranges 4 through 7 for HP	±0.075% of calibrated span between 1:1 to 10:1 of URL $\text{Accuracy} = \pm\left[0.02\left(\frac{\text{URL}}{\text{span}}\right) - 0.1\right]$% of calibrated span between 10:1 and 50:1 of URL
	Square Root Mode	$\text{Accuracy} = \pm\left[0.2 + 0.05 \times \frac{\text{URL}}{\text{span}}\right]$% of calibrated flow span for all spans
	All other ranges and transmitters	±0.25% of calibrated span for all spans
Output Codes E, G, L, and M	Ranges 3 through 5 for DP and GP	±0.2% of calibrated span for all spans
	P8 Option: Ranges 3 through 8 for DP and GP, all HP and all LT	±0.1% of calibrated span for > 10 inH_2O
	All other ranges and transmitters	±0.25% of calibrated span for all spans

Output Code S

Ranges 3 through 8, DP and GP transmitters;
Ranges 4 through 7, HP transmitters
±0.075% of calibrated span for spans from 1:1 to 10:1 of URL. Between 10:1 and 50:1 of URL.

$$\text{Accuracy} = \pm\left[0.02\left(\frac{\text{URL}}{\text{span}}\right) - 0.1\right]\text{\% of calibrated span}$$

All other ranges and transmitters:
±0.25% of calibrated span

Square root mode:

$$\text{Accuracy} = \pm\left[0.2 + 0.05 \times \frac{\text{URL}}{\text{span}}\right]\text{\% of calibrated flow span}$$

Output Codes E, G, L, and M

±0.2% of calibrated span for 1151DP and GP Ranges 3 through 5. All other ranges and transmitters, ±0.25% of calibrated span.

P8 Improved Performance Option:

±0.1% of calibrated span for ranges DP/GP ranges 3-8, all HP and all LT transmitters (only available with SST isolators and it must have a span great than 10 in$H_2$0).

All other ranges and transmitters:

±0.25% of calibrated span

Stability

Output Code S
±0.1% of URL for two years for DP and GP Ranges 3 through 8. (±0.25% for all other ranges and transmitters.)

Output Codes E and G
±0.2% of URL for six months for Ranges 3 through 5. (±0.25 for all other ranges.)

Output Codes L and M
±0.25% of URL for six months.

Temperature Effect

Output Code S [–20 to 185 °F (–29 to 85 °C)]
For DP and GP transmitter Range 4 through 8:
Zero Error = ±0.2% URL per 100 °F (56 °C)
Total Error = ±(0.2% URL + 0.18% of calibrated span) per 100 °F; double the effect for other ranges and transmitters.

Output Code E, G, L, and M [–20 to 200 °F (–29 to 93 °C)]
For Ranges 4 through 0:
Zero Error = ±0.5% URL per 100 °F.
Total Error = ±(0.5% URL + 0.5% of calibrated span) per 100 °F (56 °C); double the effect for Range 3.

Static Pressure Effect

DP Transmitters
Zero Error: ±0.25% of URL for 2,000 psi (13790 kPa) for Range 4 and 5 or ±0.5% for other ranges, correctable through rezeroing at line pressure.

Span Error: Correctable to ±0.25% of input reading per 1,000 psi (6895 kPa), or to ±0.5% for Range 3.

HP Transmitters
Zero Error: ±2.0% of URL for 4,500 psi (31027 kPa), correctable through rezeroing at line pressure.

Span Error: Correctable to ±0.25% of input reading per 1,000 psi (6895 kPa).

Vibration Effect

0.05% of URL per g to 200 Hz in any axis.

Power Supply Effect

Output Code S, E, G
Less than 0.005% of output span per volt.

Output Codes L, M
Output shift of less than 0.05% of URL for a 1 V dc power supply shift.

Load Effect

Output Code S, E, G
No load effect other than the change in power supplied to the transmitter.

Output Codes L, M
Less than 0.05% of URL effect for a change in load from 100 kV to infinite ohms.

Short Circuit Condition (Output Codes L and M only)

No damage to the transmitter will result when the output is shorted to common or to power supply positive (limit 12 V).

EMI/RFI Effect

Output shift of less than 0.1% of span when tested to SAMA PMC 33.1 from 20 to 1000 MHz and for field strengths up to 30 V/m (covers on).

Mounting Position Effect

Zero shift of up to 1 inH_2O (0.25 kPa).

With liquid level diaphragm in vertical plane, zero shift of up to 1 inH_2O (0.25 kPa). With liquid level diaphragm in horizontal plane, zero shift of up to 5 inH_2O (1.25 kPa) plus extension length on extended units. All zero shifts can be calibrated out. No effect on span.

FUNCTIONAL SPECIFICATIONS

Service

Liquid, gas, and vapor applications.

Ranges

See Table A-1 for complete list of ranges for all Rosemount 1151 transmitters.

Table A-1. Rosemount 1151 Transmitter Range Availability by Model (URL = Upper Range Limit).

Range Code	Rosemount 1151 Ranges (URL)	DP	HP	GP	DP/GP/Seals	AP	LT
3	30 inH_20 (7.46 kPa)	•	NA	•	NA	NA	NA
4	150 inH_20 (31.08 kPa)	•	•	•	•	•	•
5	750 inH_20 (186.4 kPa)	•	•	•	•	•	•
6	100 psi (689.5 kPa)	•	•	•	•	•	•
7	300 psi (2068 kPa)	•	•	•	•	•	NA
8	1,000 psi (6895 kPa)	•	NA	•	NA	•	NA
9	3,000 psi (20684 kPa)	NA	NA	•	NA	NA	NA
0	6,000 psi (41369 kPa)	NA	NA	•	NA	NA	NA

Minimum span equals the upper range limit (URL) divided by rangedown. Rangedown varies with the output code (see Table A-2).

Table A-2. Rangeability.

Output Code	Minimum Span	Maximum Span
E, G	URL/6	URL
L	URL/1.1	URL
M	URL/2	URL
S (DP and GP, SST, Range 3–9, HP SST, Range 4-7)	URL/50	2 × URL(1)
S (All others)	URL/15	2 × URL(1)

(1) Transmitter is capable of measuring from –URL to URL.

Outputs

Code S, Smart
4–20 mA dc, user selectable for linear or square root output. Digital process variable superimposed on 4–20 mA signal, available to any host that conforms to the HART protocol.

Code E, Analog
4–20 mA dc, linear with process pressure.

Code G, Analog
10–50 mA dc, linear with process pressure. Not available with the CE mark.

Code L, Low Power
0.8 to 3.2 V dc, linear with process pressure.

Code M, Low Power
1 to 5 V dc, linear with process pressure.

Table A-3. Output Code Availability

Code	1151 Output Options/Damping	DP	HP	GP	DP/GP/Seals	AP	LT
S	4–20 mA, Digital, Smart/Variable	•	•	•	•	•	•
E	4–20 mA, Linear, Analog/Variable	•	•	•	•	•	•
G(1)	10–50 mA, Linear, Analog/Variable	•	•	•	•	•	•
L	0.8 to 3.2 V, Linear, Low Power/Fixed	•	•	•	•	•	NA
M	1 to 5 V, Linear, Low Power/Fixed	•	•	•	•	•	NA

(1) Not available with CE mark.

Power Supply

External power supply required. Transmitter operates on:

12 to 45 V dc with no load for Output Codes S and E.
30 to 85 V dc with no load for Output Code G.
5 to 12 V dc for Output Code L.
8 to 14 V dc for Output Code M.

Where:

Figure A-1. Power Supply Load Limitations

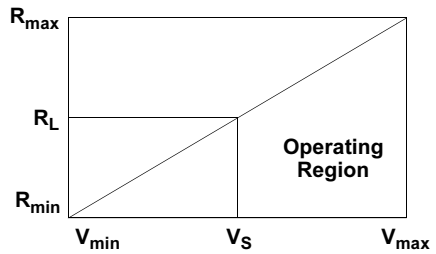

Code	V_{min}	V_{max}	R_{min}	R_{max}	R_L at Supply Voltage (V_s)
S(1)	12	45	0	1650	$R_L = 43.5 (V_S – 12)$
E(2)	12	45	0	1650	$R_L = 50 (V_S – 12)$
G	30	85	0	1100	$R_L = 20 (V_S – 30)$
L	5	12	Low Power Minimum Load Impedance: 100 kΩ		
M	8	14			

(1) A minimum of 250 ohms is required for communication.
(2) For CSA Approvals (code E), V_{max} = 42.4 V dc.

Current Consumption (Low Power Only) Under Normal Operating Conditions

Output Code L
1.5 mA dc.

Output Code M
2.0 mA dc.

Span and Zero

Output Code S
Span and zero may be accessed with local adjustments or remotely via a HART-based communicator.

Output Codes E, G, L, and M
Span and zero are continuously adjustable.

Zero Elevation and Suppression

Output Code S, E, and G.
Zero elevation and suppression must be such that the lower range value is greater than or equal to the (–URL) and the upper range value is less than or equal to the (+URL). The calibrated span must be greater than or equal to the minimum span.

Output Code L
Zero is adjustable ±10% of URL and span is adjustable from 90 to 100% of URL.

Output Code M
Zero is adjustable ±50% of URL and span is adjustable from 50 to 100% of URL.

Temperature Limits

Ambient

Code S:	–40 to 185 °F (–40 to 85 °C).
Code E:	–40 to 200 °F (–40 to 93 °C).
Code G, L, M:	–20 to 200 °F (–29 to 93 °C).

Storage
Code S:–60 to 185 °F (–51 to 85 °C).
Codes E, G, L, M:–60 to 250 °F (–51 to 121 °C).

Process *At atmospheric pressures and above.*

Table A-4. Rosemount 1151 Temperature Limits.

Rosemount 1151DP, HP, AP, GP, LT	
Silicone Fill Sensor	–40 to 220 °F (–40 to 104 °C)
Inert Fill Sensor	0 to 160 °F (–18 to 71 °C)
Rosemount 1151LT High-Side Temperature Limits (Process Fill Fluid)	
Syltherm® XLT	–100 to 300 °F (–73 to 149 °C)
D.C.® Silicone 704	60 to 400 °F (15 to 205 °C)
D.C. Silicone 200	–40 to 400 °F (–40 to 205 °C)
Inert	–50 to 350 °F (–45 to 177 °C)
Glycerin and Water(1)	0 to 200 °F (–18 to 93 °C)
Neobee M-20®(2)	0 to 400 °F (–18 to 205 °C)
Propylene Glycol and Water(2)	0 to 200 °F (–18 to 93 °C)
Syltherm 800	–50 to 400 °F (–45 to 205 °C)

(1) Not suitable for vacuum service.
(2) Not compatible with Buna-N or Ethylene-Propylene O-ring material.

NOTE
When specifying Option Codes W4 and W6, sensing element operating temperatures are 32 to 200 °F (0 to 93 °C) for silicone fill and 32 to 160 °F (0 to 71 °C) for inert fill.

Static Pressure Limits

Transmitters operate within specifications between the following limits:

Rosemount 1151DP
0.5 psia to 2,000 psig (3.45 kPa to 13790 kPa).

Rosemount 1151HP
0.5 psia to 4,500 psig (3.45 kPa to 31027 kPa).

Rosemount 1151AP
0 psia to the URL.

Rosemount 1151GP
0.5 psia (3.45 kPa) to the URL.

Rosemount 1151LT
Limit is 0.5 psia (3.45 kPa) to the flange rating or sensor rating, whichever is lower.

Overpressure Limits

Transmitters withstand the following limits without damage:

Rosemount 1151DP
0 psia to 2,000 psig (0 to 13790 kPa).

Rosemount 1151HP
0 psia to 4,500 psig (0 to 31027 kPa).

Rosemount 1151AP
0 psia to 2,000 psia (0 to 13790 kPa).

Rosemount 1151GP
Ranges 3–8: 0 psia to 2,000 psig (0 to 13790 kPa).
Range 9: 0 psia to 4,500 psig (31027 kPa).
Range 0: 0 psia to 7,500 psig (51710 kPa).

Rosemount 1151LT
Limit is 0 psia to the flange rating or sensor rating, whichever is lower. See Table A-5.

Table A-5. Rosemount 1151LT and Level Flange Rating Limits.

Standard	Class	Carbon Steel Rating	Stainless Steel Rating
ANSI	150	285 psig(1)	275 psig(1)
ANSI	300	740 psig(1)	720 psig(1)
ANSI	600	1,480 psig(1)	1,440 psig(1)
DIN	PN 10–40	40 bar(2)	40 bar(2)
DIN	PN 10/16	16 bar(2)	16 bar(2)
DIN	PN 25/40	40 bar(2)	40 bar(2)

(1) At 100 °F (38 °C), the rating decreases with increasing temperature.
(2) At 248 °F (120 °C), the rating decreases with increasing temperature.

Burst Pressure Limit
All models: 10,000 psig (68.95 MPa) burst pressure on the flanges.

Humidity Limits
0 to 100% relative humidity.

Volumetric Displacement
Less than 0.01 in^3 (0.16 cm^3).

Failure Mode Alarm (Smart only)

When not in multidrop mode, self-diagnosis detects a gross transmitter failure, the analog signal will be driven below 3.9 mA or above 21 mA to alert the user. High or low alarm signal is user selectable.

Level	4–20 mA Saturation Value	4–20 mA Alarm Value
Low	3.9 mA	3.8 mA
High	20.8 mA	21.75 mA

Transmitter Security (Smart only)

Activating the transmitter security function prevents changes to the transmitter configuration, including local zero and span adjustments. Security is activated by an internal switch.

Overpressure Alarm (Smart only)

If the sensor detects a negative overpressure value, the analog signal will be driven to 3.9 mA. If the sensor detects a positive overpressure value, the analog signal is driven to 20.8 mA.

Damping

Numbers given are for silicone fill fluid at room temperature. The minimum time constant is 0.2 seconds (0.4 seconds for Range 3).
Inert-filled sensor values would be slightly higher.

Output Code S
Time constant is adjustable in 0.1 second increments from minimum to 16.0 seconds.

Output Codes E and G
Time constant continuously adjustable between minimum and 1.67 seconds.

Output Codes L, M
Damping is fixed at minimum time constant.

Turn-on Time

Maximum of 2.0 seconds with minimum damping. Low power output is within 0.2% of steady state value within 200 ms after application of power.

PHYSICAL SPECIFICATIONS

Electrical Connections

1/2–14 NPT conduit with screw terminals and integral test jacks compatible with miniature banana plugs (Pomona 2944, 3690, or equivalent). The communicator connections are fixed to the terminal block on smart transmitters.

Process Connections

Rosemount 1151DP, HP, GP, AP

1/4–18 NPT on 2.125-in. (54-mm) centers on flanges for Ranges 3, 4, and 5.

1/4–18 NPT on 2.188-in. (56-mm) centers on flanges for Ranges 6 and 7.

1/4–18 NPT on 2.250-in. (57-mm) centers on flanges for Range 8.

1/2–14 NPT on adaptors.

For Ranges 3, 4, and 5, flange adaptors can be rotated to give centers of 2.0 in. (51 mm), 2.125 in. (54 mm), or 2.250 in. (57 mm).

Rosemount 1151LT

High pressure side: 2-, 3-, or 4-in., Class 150, 300 or 600 flange; 50, 80, or 100 mm, PN 40 or 10/16 flange.

Low pressure side: 1/4–18 NPT on flange. 1/2–14 NPT on adapter.

1151 Process Wetted Parts

Isolating Diaphragms

316L SST, Alloy C-276, or Tantalum. See ordering table for availability per model type.

Drain/Vent Valves

316 SST or Alloy C-276. See ordering table for availability per model type.

Process Flanges and Adaptors

Plated carbon steel, 316 SST or CW-12MW (Cast version Alloy C-276, material per ASTM-A494). See ordering table for availability per model type.

Wetted O-rings

Viton® (other materials also available). See ordering table for availability per model type.

1151LT Process Wetted Parts

Flanged Process Connection (Transmitter High Side)

Process diaphragms, including process gasket surface
316L SST, Alloy C-276, or Tantalum.

Extension
CF-3M (cast version to 316L SST, material per ASTM-A743) or CW-12MW (Cast version of Alloy C-276, material per ASTM-A494); fits schedule 40 and 80 pipe.

Mounting Flange
Carbon steel or SST.

Reference Process Connection (Transmitter Low Side)

Isolating Diaphragms
316L SST, Alloy C-276, or tantalum.

Reference Flange and Adapter
CF-8M (Cast version of 316 SST, material per ASTM-A743).

Non-wetted Materials

Fill Fluid

Silicone oil or inert fill.

Nuts and Bolts

Plated carbon steel

Blank flange (GP and AP only)

Plated carbon steel

Electronics Housing

Low-copper aluminium. NEMA 4X.

Cover O-rings

Buna-N.

Paint

Polyurethane.

Weight

12 lb (5.4 kg) for AP, DP, GP, and HP transmitters, excluding options. See Table A-6.

Table A-6. Flange Weights with Rosemount 1151LT Transmitter.

Flange[(1)]	Flush Mount	2-inch (50mm) Extension	4-inch (100mm) Extension	6-inch (150mm) Extension
2-in., Class 150	18 (8.2)	N/A	N/A	N/A
3-in., Class 150	23 (10.4)	25 (11.3)	26 (11.8)	27 (12.3)
4-in., Class 150	29 (13.2)	32 (14.5)	34 (15.4)	36 (16.3)
2-in., Class 300	20 (9.1)	N/A	N/A	N/A
3-in., Class 300	28 (12.7)	30 (13.6)	31 (14.1)	32 (14.5)
4-in., Class 300	38 (17.2)	41 (18.6)	43 (19.5)	45 (20.4)
2-in., Class 600	22 (10.0)	N/A	N/A	N/A
3-in., Class 600	31 (14.1)	33 (15.0)	34 (15.4)	35 (15.9)
DN 50, PN10-40	20 (9.1)	N/A	N/A	N/A
DN 80, PN 25/40	25 (11.3)	27 (12.3)	28 (12.7)	29 (13.2)
DN 100, PN 10/16 DN	25 (11.3)	28 (12.7)	30 (13.6)	32 (14.5)
100, PN 25/40	29 (13.2)	32 (14.5)	34 (15.4)	36 (16.3)

(1) Stainless steel flange weights are listed.

DIMENSIONAL DRAWINGS

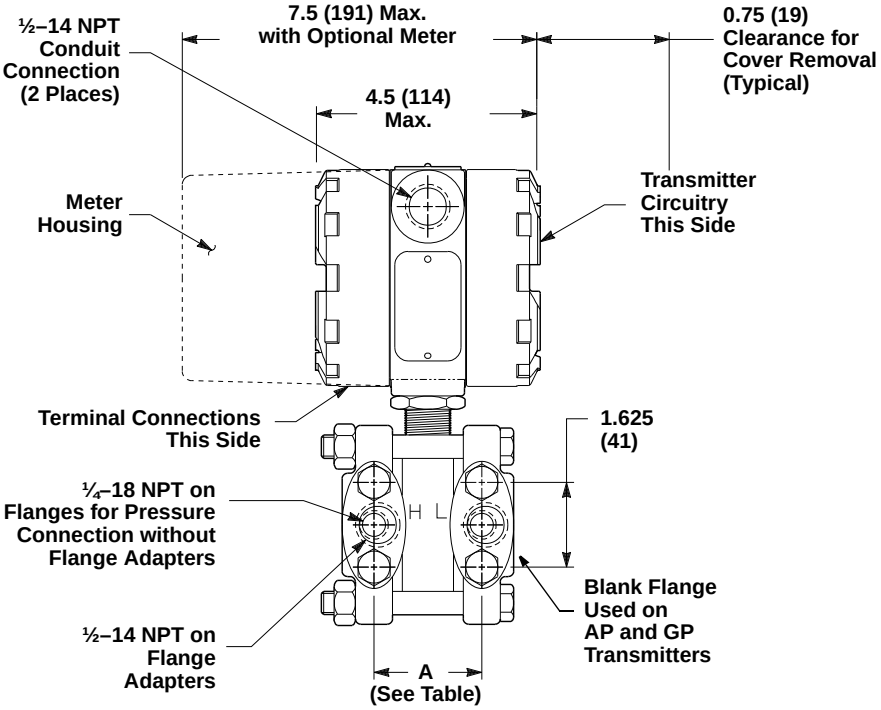

Range	Flange Distance "A" Center to Center	
	inches	mm
3, 4, 5	2.125	54
6, 7	2.188	56
8	2.250	57
9	2.281	58
0	2.328	59

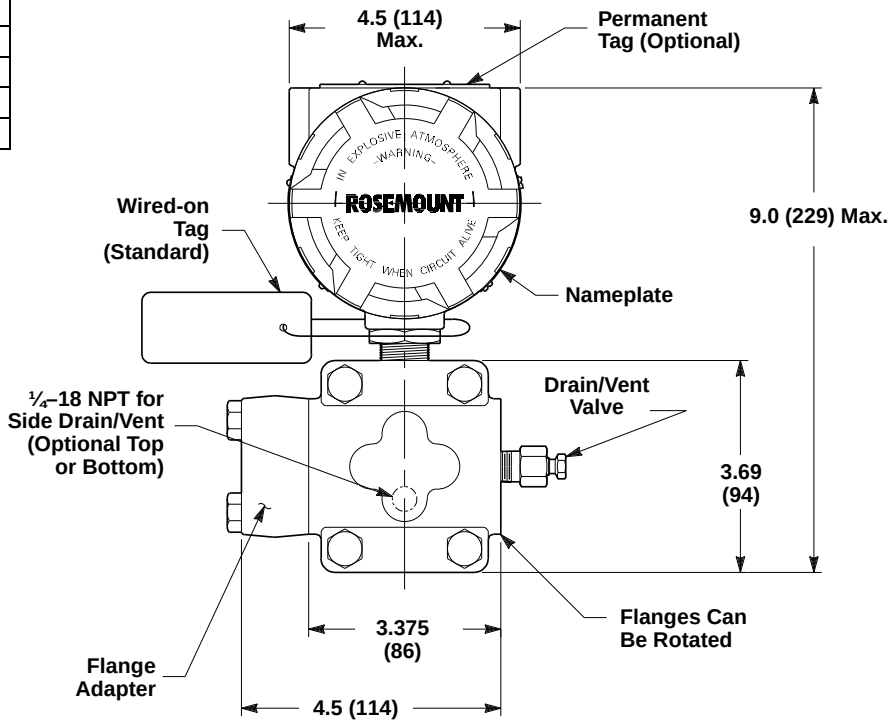

NOTE
Dimensions are in inches (millimeters).

1151LT

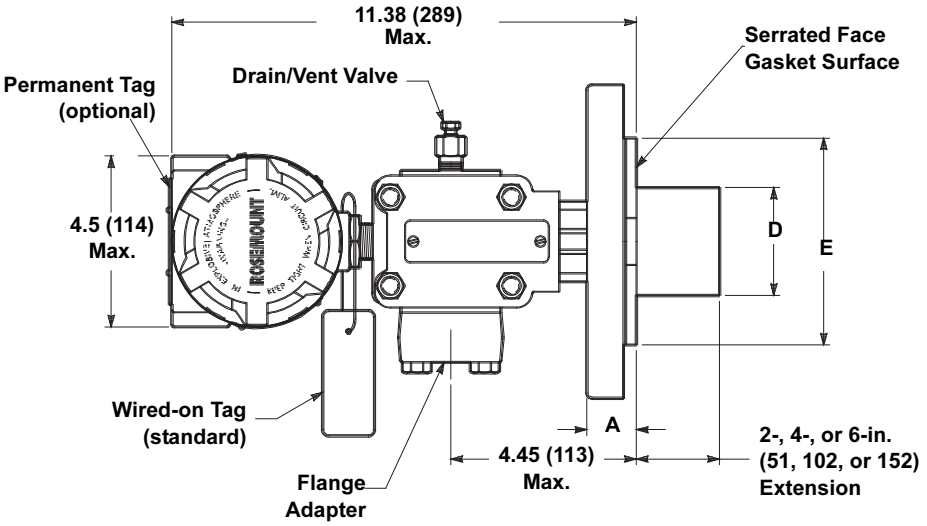

OPTIONAL FLUSHING CONNECTION RING (LOWER HOUSING)

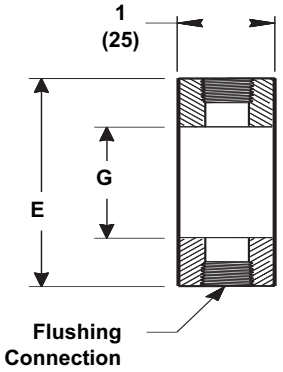

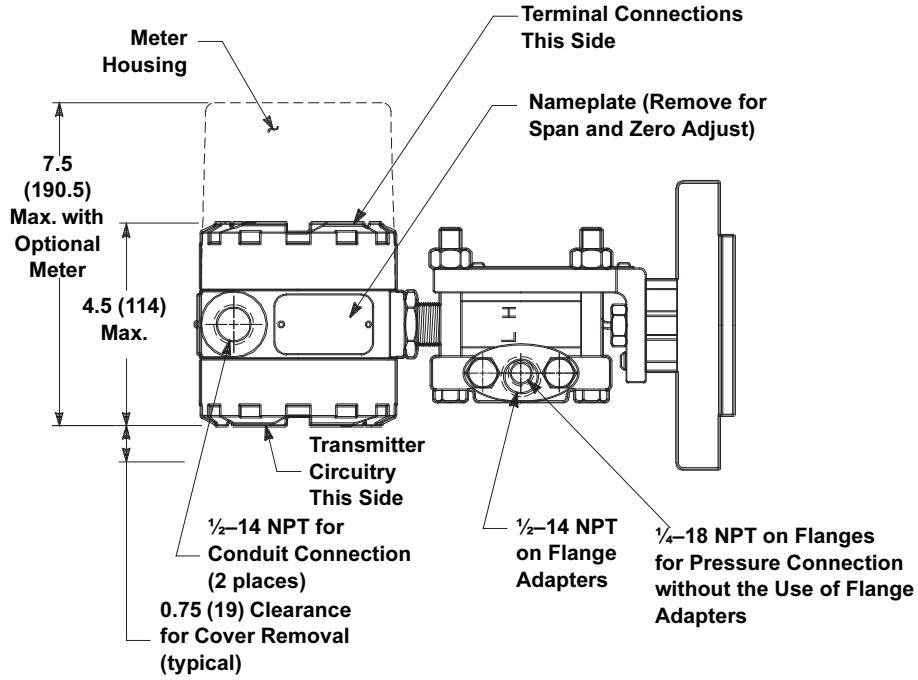

DIAPHRAGM ASSEMBLY AND MOUNTING FLANGE

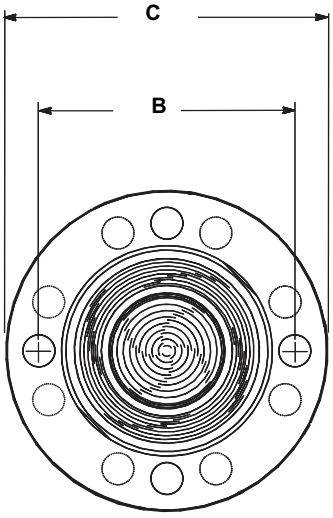

NOTE
Dimensions are in inches (millimeters).

Table A-7. 1151LT Dimensional Specifications

Class	Pipe Size	Flange Thickness A	Bolt Circle Diameter B	Outside Diameter C	No. of Bolts	Bolt Hole Diameter	Exten. Diam. D (1)	O.D. Gask. Surf. E	Proc. Side G
ANSI 150	2 (51)	1.12 (28)	4.75 (121)	6.0 (152)	4	0.75 (19)	NA	3.6(92)	2.12 (54)
	3 (76)	1.31 (33)	6.0 (152)	7.5 (191)	4	0.75 (19)	2.58 (66)	5.0 (127)	3.5 (89)
	4 (102)	1.31 (33)	7.5 (191)	9.0 (229)	8	0.75 (19)	3.5 (89)	6.2 (158)	4.5 (114)
ANSI 300	2 (51)	1.25 (32)	5.0 (127)	6.5 (165)	8	0.75 (19)	NA	3.6(92)	2.12 (54)
	3 (76)	1.50 (38)	6.62 (168)	8.25 (210)	8	0.88 (22)	2.58 (66)	5.0 (127)	3.5 (89)
	4 (102)	1.62 (41)	7.88 (200)	10.0 (254)	8	0.88 (22)	3.5 (89)	6.2 (158)	4.5 (114)
ANSI 600	2 (51)	1.12 (28)	5.0 (127)	6.5 (165)	8	0.75 (19)	NA	3.6(92)	2.12 (54)
	3 (76)	1.37 (35)	6.62 (168)	6.62 (168)	8	0.88 (22)	2.58 (66)	5.0 (127)	3.5 (89)
DIN PN10-40	DN 50	26 mm	125 mm	165 mm	4	18 mm	NA	4.0 (102)	2.5 (63)
DIN PN 25/40	DN 80	30 mm	160 mm	200 mm	8	18 mm	65 mm	5.4 (138)	3.7 (94)
	DN 100	30 mm	190 mm	235 mm	8	22 mm	89 mm	6.2 (158)	4.5 (114)
DIN PN 10/16	DN 100	26 mm	180 mm	220 mm	8	18 mm	89 mm	6.2 (158)	4.5 (114)

(1) Tolerances are 0.040 (1.02), –0.020 (0.51).

Mounting Bracket Option Codes B1, B4, and B7

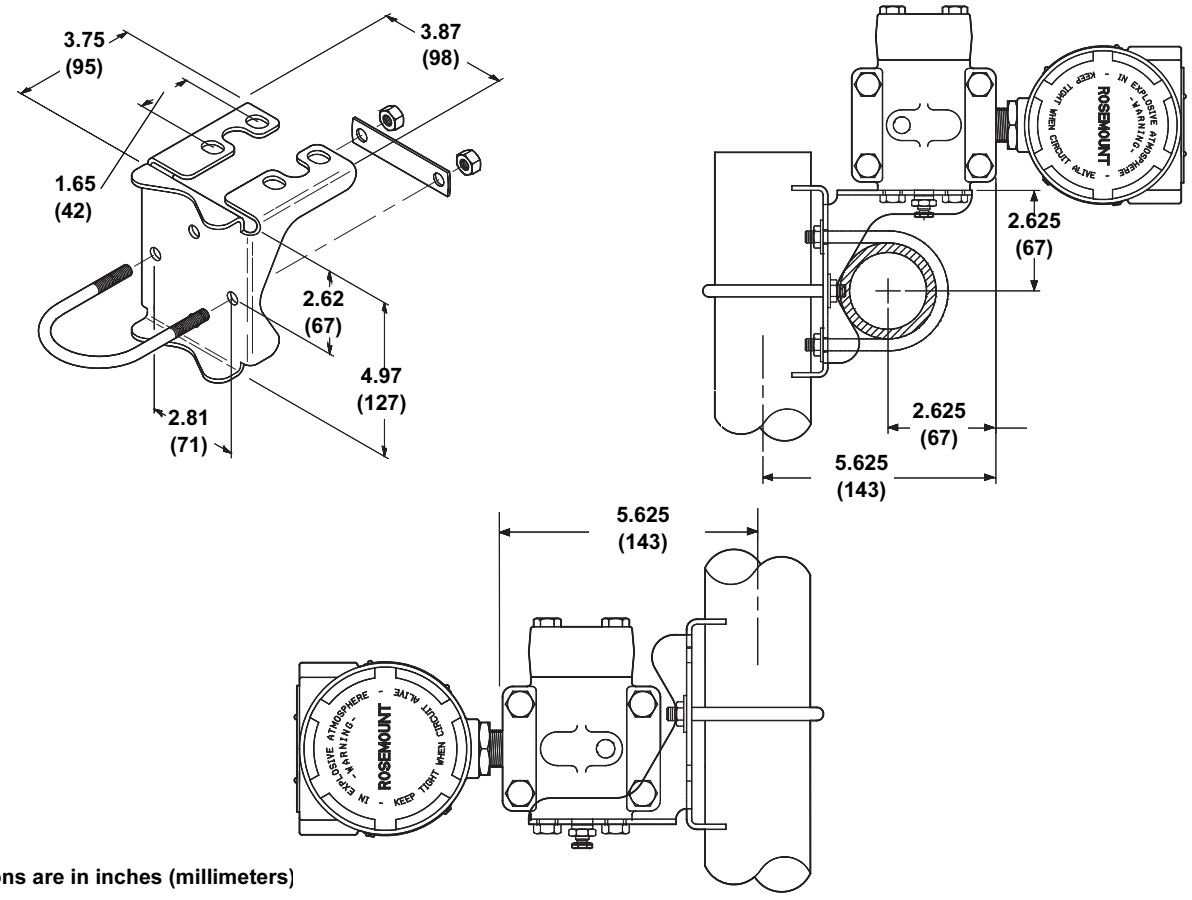

NOTE
Dimensions are in inches (millimeters)

Panel Mounting Bracket Option Codes B2 and B5

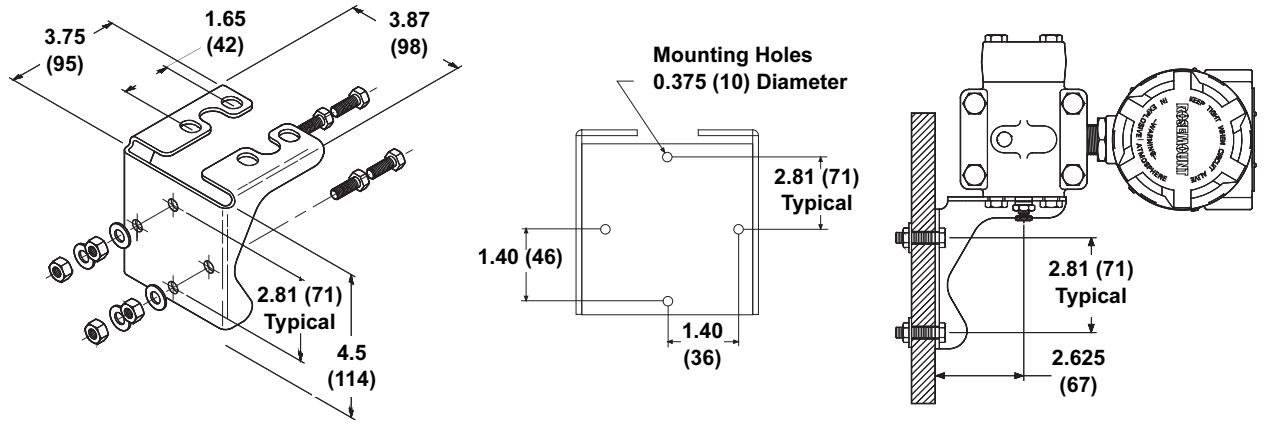

NOTE
Dimensions are in inches (millimeters).

Flat Mounting Bracket Option Codes B3, B6, and B9

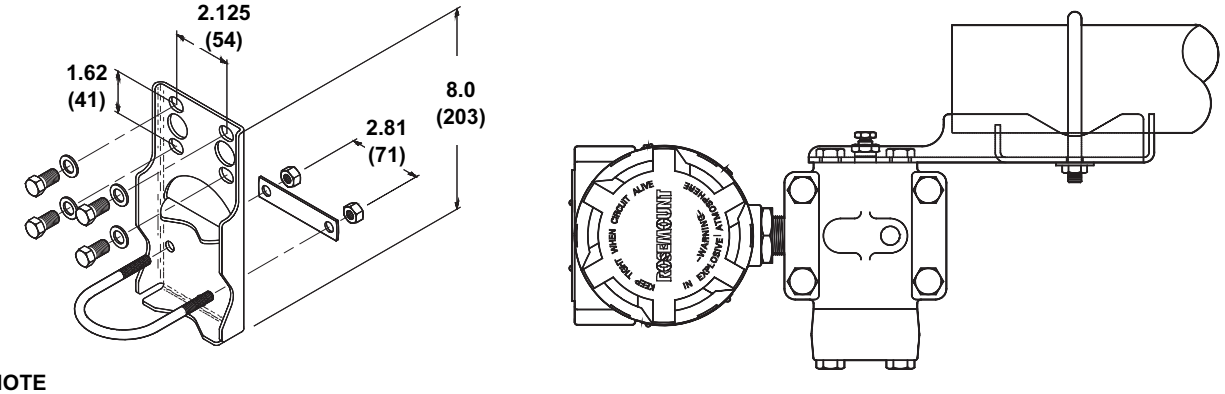

NOTE
Dimensions are in inches (millimeters).

Meter Options

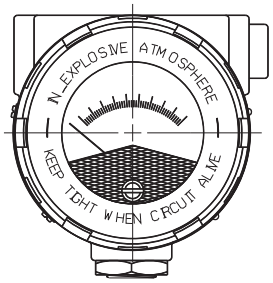

OPTION CODE M1
LINEAR SCALE

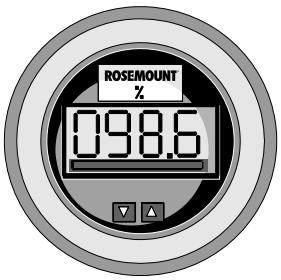

OPTION CODE M4
LINEAR SCALE

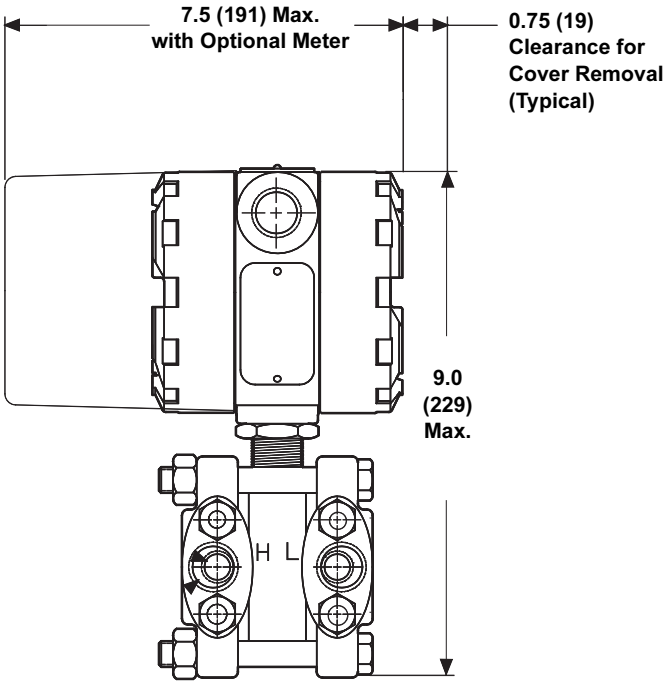

NOTE
Dlmensions are in inches (millimeters).

Flange Insert

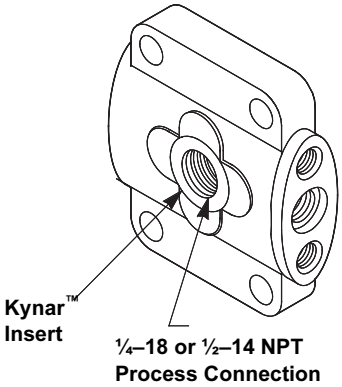

1151 Process Connections

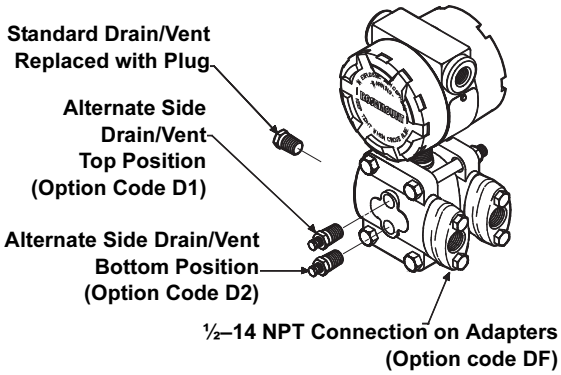

ORDERING INFORMATION

Table A-8. Rosemount 1151 Ordering Information

• = Applicable — = Not Applicable

Model	Transmitter Type	DP	HP	GP	AP
1151DP	Differential Pressure Transmitter	•	—	—	—
1151HP	Differential Pressure Transmitter for High Line Pressures	—	•	—	—
1151GP	Gage Pressure Transmitter	—	—	•	—
1151AP	Absolute Pressure Transmitter	—	—	—	•
Code	**Pressure Ranges (URL) (select one)**	**DP**	**HP**	**GP**	**AP**
3	30 inH2O (7.46 kPa)	•	—	•	—
4	150 inH2O (37.3 kPa)	•	•	•	•
5	750 inH2O (186.4 kPa)	•	•	•	•
6	100 psi (689.5 kPa)	•	•	•	•
7	300 psi (2068 kPa)	•	•	•	•
8	1,000 psi (6895 kPa)	•	—	•	•
9	3,000 psi (20684 kPa)	—	—	•	—
0	6,000 psi (41369 kPa)	—	—	•	—
Code	**Transmitter Output (select one)**	**DP**	**HP**	**GP**	**AP**
S	4–20 mA with Digital Signal based on HART Protocol (Smart)	•	•	•	•
E	4–20 mA, Linear with Input	•	•	•	•
G[1]	10–50 mA, Linear with Input	•	•	•	•
L[2]	Low Power 0.8 to 3.2 Vdc	•	•	•	•
M[2]	Low Power 1 to 5 Vdc	•	•	•	•

		MATERIALS OF CONSTRUCTION[3]						
Code	**Flanges/Adapters**	**Drains/Vents**	**Diaphragms**	**Fill Fluid**	**DP**	**HP**	**GP[4]**	**AP[4]**
52	Nickel-plated Carbon Steel	316 SST	316L SST	Silicone	•	•	•	•
53	Nickel-plated Carbon Steel	316 SST	Alloy C-276	Silicone	•	•	•	•
55	Nickel-plated Carbon Steel	316 SST	Tantalum	Silicone	•	—	•	—
22	316 SST	316 SST	316L SST	Silicone	•	•	•	•
23	316 SST	316 SST	Alloy C-276	Silicone	•	•	•	•
25	316 SST	316 SST	Tantalum	Silicone	•	—	•	—
33[5]	Cast C-276	Alloy C-276	Alloy C-276	Silicone	•	•	•	•
35	Cast C-276	Alloy C-276	Tantalum	Silicone	•	—	•	—
73[5]	316 SST	Alloy C-276	Alloy C-276	Silicone	•	•	•	•
83[5]	Nickel-plated Carbon Steel	Alloy C-276	Alloy C-276	Silicone	•	•	•	•
5A	Nickel-plated Carbon Steel	316 SST	316L SST	Inert	•	—	•	—
5B	Nickel-plated Carbon Steel	316 SST	Alloy C-276	Inert	•	—	•	—
5D	Nickel-plated Carbon Steel	316 SST	Tantalum	Inert	•	—	•	—
2A	316 SST	316 SST	316L SST	Inert	•	—	•	—
2B	316 SST	316 SST	Alloy C-276	Inert	•	—	•	—
2D	316 SST	316 SST	Tantalum	Inert	•	—	•	—
3B	Cast C-276	Alloy C-276	Alloy C-276	Inert	•	—	•	—
3D	Cast C-276	Alloy C-276	Tantalum	Inert	•	—	•	—
7B[5]	316 SST	Alloy C-276	Alloy C-276	Inert	•	—	•	—
8B[5]	Nickel-plated Carbon Steel	Alloy C-276	Alloy C-276	Inert	•	—	•	—

Code	**Mounting Brackets (optional - select one)**	**DP**	**HP**	**GP**	**AP**
B1	Bracket, 2-in. Pipe Mount	•	•	•	•
B2	Bracket, Panel Mount	•	•	•	•
B3	Bracket, Flat, 2-in. Pipe Mount	•	•	•	•
B4	B1 Bracket w/Series 316 SST Bolts	•	•	•	•
B5	B2 Bracket w/Series 316 SST Bolts	•	•	•	•
B6	B3 Bracket w/Series 316 SST Bolts	•	•	•	•
B7	316 SST B1 Bracket with 316 SST Bolts	•	•	•	•
B9	316 SST B3 Bracket with 316 SST Bolts	•	•	•	•
Code	**LCD Display[6] (optional - select one)**	**DP**	**HP**	**GP**	**AP**
M1	Analog Scale, Linear Meter, 0–100%	•	•	•	•

Table A-8. Rosemount 1151 Ordering Information

M2	Analog Scale, Square Root Meter, 0–100% Flow		•	•	—	—
M4[7]	LCD Display, Linear Meter, 0–100%		•	•	•	•
M6	Analog Scale, Square Root Meter, 1–10√		•	•	—	—
M7[7][8]	LCD Display, Linear Meter, Special Configuration		•	•	•	•
M8[7]	LCD Display Square Root Meter, 0–100% Flow		•	•	—	—
M9[7]	LCD Display, Square Root Meter, 0–10√		•	•	—	—
Code	**Product Certifications (optional - select one)**		**DP**	**HP**	**GP**	**AP**
E8	ATEX Flameproof		•	•	•	•
I1[9]	ATEX Intrinsic Safety	**NOTE**	•	•	•	•
N1[9]	ATEX Type n	FM explosion-proof approval is standard.	•	•	•	•
I5[9]	FM Intrinsically Safe, Division 2		•	•	•	•
K5[9]	FM Explosion-Proof, Dust Ignition-proof, Intrinsically Safe, Division 2		•	•	•	•
C6[9]	CSA Explosion-Proof, Intrinsically Safe		•	•	•	•
I6[9]	CSA Intrinsically Safe		•	•	•	•
K6[9]	CSA Explosion-Proof, Dust Ignition-proof, Intrinsically Safe, Division 2		•	•	•	•
E6	CSA Explosion-Proof, Dust Ignition-proof, Division 2		•	•	•	•
E7	SAA Flameproof, Dust Ignition-proof		•	•	•	•
I7[9]	SAA Intrinsic Safety		•	•	•	•
N7[9]	SAA Type n		•	•	•	•
C5[10]	Measurement Canada Accuracy Approval		•	•	•	•
Code	**Housing (optional - select one)**		**DP**	**HP**	**GP**	**AP**
H1[11]	SST Non-wetted Parts on Transmitter without Meter		•	•	•	•
H2[11]	SST Non-wetted Parts on Transmitter with Meter		•	•	•	•
H3	SST Housing, Covers, Conduit Plug, Lock-nut, without Meter		•	•	•	•
H4	SST Housing, Covers, Conduit Plug, Lock-nut, with Meter		•	•	•	•
C2[12]	M20 Conduit Threads		•	•	•	•
J1	G½ Conduit Threads		•	•	•	•
Code	**Terminal Blocks (optional - select one)**		**DP**	**HP**	**GP**	**AP**
R1	Integral Transient Protection (Only available with output options S and E)		•	•	•	•
Code	**Bolts for Flanges and Adapters (optional - select one)**		**DP**	**HP**	**GP**	**AP**
L3	ASTM A193-B7 Flange and Adapter Bolts		•	•	•	•
L4	316 SST Flange and Adapter Bolts		•	•	•	•
L5	ASTM A193-B7M Flange and Adapter Bolts		•	•	•	•
Code	**Process Connections (optional[13])**	**Materials**	**DP**	**HP**	**GP**	**AP**
D1	Side Drain/ Vent, Top	316 SST	•	•	•	•
		Cast C-276	•	•	•	•
D2	Side Drain/ Vent, Bottom	316 SST	•	•	•	•
		Cast C-276	•	•	•	•
DF	½–14 NPT Flange adapter(s)- Material determined by flange material	Carbon Steel	•	•	•	•
		316 SST	•	•	•	•
		Cast C-276	•	•	•	•
D4[14]	Conformance to DIN EN61518 Ranges 3, 4, 5 with ¼ NPT Process Connections Thread (Available in Germany Only)		•	•	—	—
D5[14]	Conformance to DIN EN61518 Ranges 6, 7, 8, without ¼ NPT Process Connections Thread (Available in Germany Only)		•	•	—	—
D6	316 SST Low Side Blank Flange		—	—	•	•
D9	JIS Process Connection–RC ¼ Flange with RC ½ Flange Adapter	Carbon Steel	•	•	•	•
		316 SST	•	•	•	•
		Cast C-276	•	•	•	•
G1	DIN Spacing (Single Entry Port, No Side V/D Hole Flange)		•	•	•	•
G2	DIN Spacing (Single Entry Port, Two Side V/D Hole Flange)		•	•	•	•
G3	DIN Spacing (Dual Entry Port, No Side V/D Hole Flange)		•	•	•	•
G4	DIN Spacing (Dual Entry Port, One Top Side V/D Hole Flange)		•	•	•	•
G5	DIN Spacing (Dual Entry Port, One Bottom Side V/D Hole Flange)		•	•	•	•
G6	DIN Spacing (Dual Entry Port, Two Side V/D Hole Flange)		•	•	•	•
K1[15]	Kynar insert, ¼–18 NPT		•	—	•	—
K2[15]	Kynar insert, ½–14 NPT		•	—	•	—
S1[16][17]	Assemble to one Rosemount 1199 diaphragm seal		•	—	•	—
S2[16][17]	Assemble to two Rosemount 1199 diaphragm seals		•	—	—	—

Table A-8. Rosemount 1151 Ordering Information

S4[17][18]	Assemble to Rosemount 1195 Integral Orifice	•	—	—	—
S6[17]	Assemble to Rosemount 304 Manifold or Connection System	•	•	•	•
Code	**Wetted O-ring Material (optional - select one)**	**DP**	**HP**	**GP**	**AP**
W2	Buna-N	•	•	•	•
W3	Ethylene-Propylene	•	•	•	•
W4	Aflas	•	•	•	•
W6[19][20]	Spring-loaded PTFE	•	—	•	•
W7[20][21]	PTFE	•	—	•	•
Code	**Special Configuration (Software) (optional - select one)**	**DP**	**HP**	**GP**	**AP**
CN[22][23]	Analog Output Levels Compliant with NAMUR Recommendation NE43: 27-June-1996 and Low Alarm Level	•	•	•	•
C4[22][23]	Analog Output Levels Compliant with NAMUR Recommendation NE43: 27-June-1996 and High Alarm Level	•	•	•	•
C9[23]	Software Configuration (Requires completed Configuration Data Sheet)	•	•	•	•
Code	**Special Certifications (optional - select one)**	**DP**	**HP**	**GP**	**AP**
Q4	Calibration Certificate	•	•	•	•
Q8[24]	Material Traceability per EN 10204 3.1.B	•	•	•	•
Q16[25]	Surface Finish Certification for Sanitary Remote Seals	•	•	•	•
Code	**Toolkit Total System Performance Reports (optional - select one)**	**DP**	**HP**	**GP**	**AP**
QZ[25]	Remote Seal System Performance Calculation Report	•	—	•	—
Code	**Procedures (optional - select one)**	**DP**	**HP**	**GP**	**AP**
P1[26]	Hydrostatic Testing, 150% Maximum Working Pressure	•	•	•	•
P2[27]	Cleaning for Special Service	•	•	•	•
P3	Cleaning for <1 PPM Chlorine/Fluorine	•	•	•	•
Code	**Outputs (optional - select one)**	**DP**	**HP**	**GP**	**AP**
V1[28]	Reverse Output	—	—	•	—
V2[29]	4–20 mV Test Signal	•	•	•	•
V3[29]	20–100 mV Test Signal	•	•	•	•
Typical Model Number: 1151DP 4 S 52 B3 M4					

(1) Output Code G is not available with CE Mark.
(2) Meter or SST housing not valid with this option.
(3) Bolts and conduit plugs are plated carbon steel.
(4) On GP and AP transmitters, the low-side flange is plated carbon steel. For a stainless-steel low-side flange, order process connection Option Code D6.
(5) These selections meet NACE material recommendations per MR 01-75.
(6) Not available with Output Codes L or M, or Option Codes V2 or V3.
(7) Not available with Output Codes G, V2, or V3.
(8) Specify the range, mode, and engineering units. The 20 mA value must be greater than the 4 mA value.
(9) Not available with Output Codes E, G, L, or M.
(10) Limited availability depending on transmitter type and range. Contact an Emerson Process Management representative.
(11) Option includes SST housing, covers, conduit plug, locknut, L4 bolting, and D6 low side blank flange for GP and AP transmitters. Option Codes L4 and D6 parts are included with housing Option Codes H1 and H2.
(12) Not available with Output Codes L or M. Available only with aluminum housing.
(13) Allowable combinations are: D1, D2, D6 or D6, S1.
(14) Material Traceability Certificate Option Q8 available.
(15) The maximum working pressure on this option is 300 psig. Available only with materials of construction Option Code 2x.
(16) This option may only be used on Ranges 4–8.
(17) "Assemble-to" items are specified separately and require a completed model number.
(18) This option has a maximum static pressure rating of 3,000 psi, and is available only for Ranges 3, 4, and 5.
(19) Contains a Alloy C-276 spring that is wetted by the process.
(20) Available for the ranges of DP (3-8), AP (4-8), and GP (3-8).
(21) PTFE O-ring has seal property limitations; Consult an Emerson Process Management representative for more information.
(22) NAMUR-Compliant operation is pre-set at the factory and cannot be changed to standard operation in the field.
(23) Available with Output Code S only.
(24) This option is available for the transmitter flange and adapters only.
(25) Requires one of the Diaphragm Seal Assembly codes (S1 or S2).
(26) Hydrostatic testing for Range 0, 125% maximum working pressure.
(27) Fluorolube® grease on wetted O-rings.
(28) Reverse output option is not needed with smart electronics; configured via HART-based communicator.
(29) Not available with Output Codes L or M.

Table A-9. Rosemount 1151LT Flange Mounted Liquid Level Transmitter.

Model	Product Description
1151LT	Flange-Mounted Liquid Level Transmitter

Code	Range
4	150 inH2O (0–635 to 0–3,810 mmH2O)
5	750 inH2O (0–3,175 to 0–19,050 mmH2O)
6	2,770 inH2O (0–11.96 to 0–70.36 mmH2O)

Code	Output
S	4–20 mA with Digital Signal based on HART Protocol (Smart)
E	4–20 mA, Linear with Input
G[1]	10–50 mA, Linear with Input

Code	Size	Material	Extension Length	
G0	2 in./DN 50	316L SST	Flush Mount Only	When specifying these option codes, a lower housing must be selected from the flushing connection options.
H0	2 in./DN 50	Alloy C-276	Flush Mount Only	
J0	2 in./DN 50	Tantalum	Flush Mount Only	
A0	3 in./DN 80	316L SST	Flush Mount	
A2	3 in./DN 80	316L SST	2 in./50 mm	
A4	3 in./DN 80	316L SST	4 in./100 mm	
A6	3 in./DN 80	316L SST	6 in./150 mm	
B0	4 in./DN 100	316L SST	Flush Mount	**NOTE** Extension diameters are sized to fit Schedule 80 pipe. Consult factory for Schedule 40 pipe.
B2	4 in./DN 100	316L SST	2 in./50 mm	
B4	4 in./DN 100	316L SST	4 in./100 mm	
B6	4 in./DN 100	316L SST	6 in./150 mm	
C0	3 in./DN 80	Alloy C-276	Flush Mount	
C2	3 in./DN 80	Alloy C-276	2 in./50 mm	
C4	3 in./DN 80	Alloy C-276	4 in./100 mm	
C6	3 in./DN 80	Alloy C-276	6 in./150 mm	
D0	4 in./DN 100	Alloy C-276	Flush Mount	
D2	4 in./DN 100	Alloy C-276	2 in./50 mm	
D4	4 in./DN 100	Alloy C-276	4 in./100 mm	
D6	4 in./DN 100	Alloy C-276	6 in./150 mm	
E0	3 in./DN 80	Tantalum	Flush Mount Only	
F0	4 in./DN 100	Tantalum	Flush Mount Only	

MOUNTING FLANGE				
Code	Size	Rating	Material	Applicable with these High Pressure Side Diaphragm Sizes
M	2-in.	Class 150	CS	2 in./DN 50
A	3-in.	Class 150	CS	3 in./DN 80
B	4-in.	Class 150	CS	4 in./DN 100
N	2-in.	Class 300	CS	2 in./DN 50
C	3-in.	Class 300	CS	3 in./DN 80
D	4-in.	Class 300	CS	4 in./DN 100
P	2-in.	Class 600	CS	2 in./DN 50
E	3-in.	Class 600	CS	3 in./DN 80
X	2-in.	Class 150	SST	2 in./DN 50
F	3-in.	Class 150	SST	3 in./DN 80
G	4-in.	Class 150	SST	4 in./DN 100
Y	2-in.	Class 300	SST	2 in./DN 50
H	3-in.	Class 300	SST	3 in./DN 80
J	4-in.	Class 300	SST	4 in./DN 100
Z	2-in.	Class 600	SST	2 in./DN 50
L	3-in.	Class 600	SST	3 in./DN 80
Q	DN 50	PN 10-40	CS	2 in./DN 50
R	DN 80	PN 40	CS	3 in./DN 80
S	DN 100	PN 40	CS	4 in./DN 100
V	DN 100	PN 10/16	CS	4 in./DN 100

Table A-9. Rosemount 1151LT Flange Mounted Liquid Level Transmitter.

K	DN 50	PN 10-40	SST	2 in./DN 50
T	DN 80	PN 40	SST	3 in./DN 80
U	DN 100	PN 40	SST	4 in./DN 100
W	DN 80	PN 10/16	SST	4 in./DN 100
SENSOR MODULE AND LOW-SIDE MATERIALS OF CONSTRUCTION				
Code	**Low-Side Flange and Adapter**	**Drain/ Vent Valves**	**Low-Side Isolator Diaphragm**	**Low-Side Fluid Fill**
52	Nickel-plated CS	316 SST	316L SST	Silicone
55	Nickel-plated CS	316 SST	Tantalum	Silicone
22	316 SST	316 SST	316L SST	Silicone
23	316 SST	316 SST	Alloy C-276	Silicone
25	316 SST	316 SST	Tantalum	Silicone
33	Cast C-276	Alloy C-276	Alloy C-276	Silicone
35	Cast C-276	Alloy C-276	Tantalum	Silicone
5D	Nickel-plated CS	316 SST	Tantalum	Inert
2A	316 SST	316 SST	316L SST	Inert
2B	316 SST	316 SST	Alloy C-276	Inert
2D	316 SST	316 SST	Tantalum	Inert
3B	Cast C-276	Alloy C-276	Alloy C-276	Inert
3D	Cast C-276	Alloy C-276	Tantalum	Inert
Code	**Process Fill - High Pressure Side**		**Temperature Limits**	
A	Syltherm XLT		–100 to 300 °F (–73 to 135 °C)	
C	D. C. Silicone 704		60 to 400 °F (15 to 205 °C)	
D	D. C. Silicone 200		–40 to 400 °F (–40 to 205 °C)	
H	Inert		–50 to 350 °F (–45 to 177 °C)	
G	Glycerin and Water		0 to 200 °F (–17 to 93 °C)	
N	Neobee M-20		0 to 400 °F (–17 to 205 °C)	
P	Propylene Glycol and Water		0 to 200 °F (–17 to 93 °C)	
Code	**Options**			
S1[2][3]	Assemble to one Rosemount 1199 diaphragm seal			
	LCD Display			
M1[4]	Analog Scale, Linear Meter 0-100%			
M4[4]	LCD Display, 0–100%			
M7[4][5]	LCD Display, Linear, Special Configuration			
	HARZARDOUS LOCATIONS CERTIFICATIONS			
E8	ATEX Flameproof			
I1[6]	ATEX Intrinsic Safety			**NOTE** FM explosion-proof approval is standard.
N1[6]	ATEX Type n			
I5[6]	FM Intrinsically Safe, Division 2			
K5[6]	FM Explosion-Proof, Dust Ignition-proof, Intrinsically Safe, Division 2			
C6[6]	CSA Explosion-Proof, Intrinsically Safe			
I6[6]	CSA Intrinsically Safe			
K6[6]	CSA Explosion-Proof, Dust Ignition-proof, Intrinsically Safe, Division 2			
E6	CSA Explosion-Proof, Dust Ignition-proof, Division 2			
E7	SAA Flameproof, Dust Ignition-proof			
I7[6]	SAA Intrinsic Safety			
N7[6]	SAA Type n			
C5[7]	Measurement Canada Accuracy Approval			
	OTHER OPTIONS			
W5	Copper O-ring for Vacuum Service (Nonwetted)			
C2[8]	M20 Conduit Threads			
Q4	Calibration Data Sheet			
Q8[9]	Material Traceability per EN 10204 3.1B			
Q16	Surface Finish Certification for Sanitary Remote Seals (all options)			
QZ	Remote Seal System Performance Calculation Report			

Table A-9. Rosemount 1151LT Flange Mounted Liquid Level Transmitter.

V1(10)	Reverse Output
V2	4–20 mV Test Signal
V3	20–100 mV Test Signal
F_	Select One Code from Flushing Connections Lower Housing Option. See Table A-10.
Typical Model Number: 1151LT 4 S A0 A 52 D F1	

(1) Not available with Output Codes E and G.
(2) For welded capillary assemblies, order sensor module and low-side materials of construction Option Code 22 (refer to 00813-0100-4016 for more information).
(3) "Assemble-to" items are specified separately and require a completed model number.
(4) Not available with Option Codes V2, or V3.
(5) Specify the Range, Mode, and Engineering Units. Also, the 20 mA value must be greater than the 4 mA value.
(6) Not available with Output Codes E and G.
(7) Limited availability depending on transmitter type and range. Contact an Emerson Process Management representative.
(8) Not available with Output Codes L or M. Available only with aluminum housing.
(9) Available for the diaphragm, upper housing, flange, adapter, extension, and lower housing.
(10) Reverse output option is not needed with smart electronics; configured via HART-based communicator.

Table A-10. Flushing Connections Lower Housing Options

• = Applicable — = Not Applicable

Code	Flushing Connection Ring Material (Lower Housing)	Flushing Connections	Size	Diaphragm Size 2-in.	3-in.	4-in.
F1	SST	1	1/4 - 18 NPT	•	•	•
F2	SST	2	1/4 - 18 NPT	•	•	•
F3(1)	Cast C-276	1	1/4 - 18 NPT	•	•	•
F4(1)	Cast C-276	2	1/4 - 18 NPT	•	•	•
F7	SST	1	1/2 - 14 NPT	•	•	•
F8	SST	2	1/2 - 14 NPT	•	•	•
F9	Cast C-276	1	1/2 - 14 NPT	•	•	•
F0	Cast C-276	2	1/2 - 14 NPT	•	•	•

(1) Not available with high pressure side Option Codes A0, B0, and G0.

Tagging

The transmitter will be tagged, at no charge, in accordance with customer requirements. All tags are stainless steel. The standard tag is wired to the transmitter. Tag character height is 0.125 in. (0.318 cm). A permanently attached tag is available upon request.

Calibration

Transmitters are factory calibrated to customer's specified range. If calibration is not specified, the transmitters are calibrated at maximum range. Calibration is performed at ambient temperature and pressure.

1151 PARTS LIST

Item numbers are references to figure callouts (page A-29 and page A-30).

Table A-11. Rosemount 1151 DP, HP, GP, and AP Pressure Transmitters

Electronics – One spare part recommended for every 25 transmitters.		
Part Description	**Item No.**	**Part Number**
S Smart Output Code		
Smart Retrofit Kit(1)		01151-0935-0001
Smart Transmitter Electronics(2)	24	01151-0948-0203
Board Spacer Kit (pkg of 12)	25	01151-0813-0001
Terminal Eyelet Kit (pkg of 12)		01151-0814-0001
Standoff Kit (pkg of 12)		01151-0815-0001
Cover(2)		01151-1045-0001
Cover O-ring (pkg of 12)		01151-0033-0003
E Output Code, 4–20 mA dc		
Amplifier Circuit Board	4	01151-0137-0007
Calibration Circuit Board	6	01151-0139-0001
G Output Code, 10–50 mA dc		
Amplifier Circuit Board	4	01151-0597-0001
Calibration Circuit Board	6	01151-0139-0001
L Output Code, 0.8–3.2 V, Low Power		
Amplifier Circuit Board	4	01151-0507-0001
Calibration Circuit Board	6	01151-0509-0001
M Output Code, Output Code, 1-5 V, Low Power		
Amplifier Circuit Board	4	01151-0507-0002
Calibration Circuit Board	6	01151-0509-0002

Sensor Modules (Silicone Fill)–One spare part recommended for every 50 transmitters.		
Part Description	**Item No.**	**Part Number**
Range 3 DP, GP (30 in H_2O)	19	
316L SST		01151-0011-0032
Alloy C-276		01151-0011-0033
Tantalum		01151-0011-0035
Range 4 DP, GP (150 in H_2O)	19	
316L SST		01151-0011-0042
Alloy C-276		01151-0011-0043
Tantalum		01151-0011-0045
Range 4 HP (150 in H_2O)	19	
316L SST		01151-0112-0042
Alloy C-276		01151-0112-0043
Range 4 AP (11 in H_gA)	19	
316L SST		01151-0054-0042
Alloy C-276		01151-0054-0043

(1) Kit contains enough parts for one transmitter and includes the smart transmitter electronics, board spacers, terminal eyelets, standoffs, cover, and cover O-ring.
(2) Package contains quantity required for one transmitter.

Sensor Modules (Silicone Fill)–One spare part recommended for every 50 transmitters.		
Part Description	**Item No.**	**Part Number**
Range 5 DP, GP (750 in H_2O)	19	
316L SST		01151-0011-0052
Alloy *C-276*		01151-0011-0053
Tantalum		01151-0011-0055
Range 5 HP (750 in H_2O)	19	
316L SST		01151-0112-0052
Alloy *C-276*		01151-0112-0053
Range 5 AP (55 in H_gA)	19	
316L SST		01151-0054-0052
Alloy *C-276*		01151-0054-0053
Range 6 DP, GP (100 psi)	19	
316L SST		01151-0041-0062
Alloy *C-276*		01151-0041-0063
Tantalum		01151-0041-0065
Range 6 HP (100 psid)	19	
316L SST		01151-0112-0062
Alloy *C-276*		01151-0112-0063
Range 6 AP (100 psia)	19	
316L SST		01151-0054-0062
Alloy *C-276*		01151-0054-0063
Range 7 DP, GP (300 psi)	19	
316L SST		01151-0041-0072
Alloy *C-276*		01151-0041-0073
Tantalum		01151-0041-0075
Range 7 HP (300 psid)	19	
316L SST		01151-0112-0072
Alloy *C-276*		01151-0112-0073
Range 7 AP (300 psia)	19	
316L SST		01151-0054-0072
Alloy *C-276*		01151-0054-0073
Range 8 DP, GP (1,000 psi)	19	
316L SST		01151-0041-0082
Alloy *C-276*		01151-0041-0083
Tantalum		01151-0041-0085
Range 8 AP (1,000 psia)	19	
316L SST		01151-0054-0082
Alloy *C-276*		01151-0054-0083
Range 9 GP (3,000 psig)	19	
316L SST		01151-0112-0092
Alloy *C-276*		01151-0112-0093
Range 10 GP (6,000 psig)	19	
316L SST		01151-0112-0002
Alloy *C-276*		01151-0112-0003

Sensor Modules (Inert Fill)–One spare part recommended for every 50 transmitters.		
Part Description	**Item No.**	**Part Number**
Range 3 DP, GP (30 in H_2O)	19	
316L SST		01151-0230-0032
Alloy *C-276*		01151-0230-0033
Tantalum		01151-0230-0035
Range 4 DP, GP (150 in H_2O)	19	
316L SST		01151-0230-0042
Alloy *C-276*		01151-0230-0043
Tantalum		01151-0230-0045
Range 5 DP, GP (750 in H_2O)	19	
316L SST		01151-0230-0052
Alloy *C-276*		01151-0230-0053
Tantalum		01151-0230-0055
Range 6 DP, GP (100 psi)	19	
316L SST		01151-0230-0062
Alloy *C-276*		01151-0230-0063
Tantalum		01151-0230-0065
Range 7 DP, GP (300 psi)	19	
316L SST		01151-0230-0072
Alloy *C-276*		01151-0230-0073
Tantalum		01151-0230-0075
Range 8 DP, GP (1,000 in psi)	19	
316L SST		01151-0230-0082
Alloy *C-276*		01151-0230-0083
Tantalum		01151-0230-0085

Housings, Covers, Flanges, And Valves – One spare part recommended for every 25 transmitters.		
Part Description	**Item No.**	**Part Number**
Electronics Housing Kit[1]	7	
Aluminum		01151-0060-0007
SST		01151-0060-0023
Electronics Cover	1	
Aluminum		01151-1045-0001
SST		01151-0620-0001
Transient Protection	7	
Electronics Housing (Aluminum) for R1 Option without Terminal Block		01151-2594-0001
Electronics Housing (SST) for R1 Option without Terminal Block		01151-2594-0004
Transient Terminal Block Assembly (Optional R1)		01151-2591-0003
Transient Protection Retrofit Kit		01151-2630-0001
Process Flange	17	
Nickel-plated Carbon Steel		01151-0236-0005
316 SST		01151-0213-0002
Cast *C-276*		01151-0213-0004
Process Flange for Single Side Drain/Vent Valve		
Nickel-plated Carbon Steel		01151-0236-0015
316 SST		01151-0213-0012
Cast *C-276*		01151-0213-0014
Blank Flange	23	
Nickel-plated Carbon Steel		90043-0046-0002
Flange Adapter	21	
Nickel-plated Carbon Steel		01151-0211-0005
316 SST		01151-0211-0002
Cast *C-276*		01151-0211-0004
DP and HP Valve Stem and Seat, 316 SST[2]	14,15	01151-0028-0022
GP and AP Valve Stem and Seat, 316 SST[1]	14,15	01151-0028-0012
DP and HP Valve Stem and Seat, Alloy *C-276*[1]	14,15	01151-0028-0023
GP and AP Valve Stem and Seat, Alloy *C-276*[1]	14,15	01151-0028-0013
Plug, 316 SST (used with side drain/vent)		C50246-0002
Plug, Alloy *C-276* (used with side drain/vent)		01151-0063-0001

(1) Kit includes electronics housing and terminal block only. Order electronics cover separately.
(2) Package contains quantity required for one transmitter.

Hardware–One spare part recommended for every 50 transmitters.		
Part Description	**Item No.**	**Part Number**
Adjustment Kit		01151-0029-0001
Adjustment Screw	10	
O-ring for Adjustment Screw	11	
Retaining Ring	12	
O-ring for Adjustment Screw (pkg of 12)	11	01151-0032-0001
O-ring for Electronics Cover (pkg of 12)	2	01151-0033-0003
O-ring for Process Flange, Viton (pkg of 12)	18	01151-0034-0020
O-ring for Process Flange, Viton and Backup Ring (pkg of 4)	18	01151-0034-0014
O-ring for Process Flange, Buna-N (pkg of 12)	18	01151-0034-0002
O-ring for Process Flange, Buna-N and Backup Ring (pkg of 4)	18	01151-0034-0016
O-ring for Process Flange, Ethylene-propylene (pkg of 12)	18	01151-0034-0004
O-ring for Process Flange, Ethylene-propylene and Backup Ring (pkg of 4)	18	01151-0034-0015
O-ring for Process Flange, Aflas (pkg of 4)[1]	18	01151-0034-0019
O-ring for Process Flange, PTFE with Alloy C-276 Spring, W6 Option (pkg of 4)	18	01151-0034-0021
O-ring for Process Flange, PTFE, W7 Option (pkg of 12)	18	01151-0034-0003
O-ring for Flange Adapter, Viton (pkg of 12)	20	01151-0035-0009
O-ring for Flange Adapter, Buna-N (pkg of 12)	20	01151-0035-0002
O-ring for Flange Adapter, Ethylene-propylene (pkg of 12)	20	01151-0035-0004
O-ring for Flange Adapter, Aflas (pkg of 12)[2]	20	01151-0035-0008
O-ring for Flange Adapter, PTFE, W6 and W7 Option (pkg of 12)	20	01151-0035-0003

(1) Kit contains enough parts for two differential or four gage/absolute transmitters. Backup rings are included.
(2) Part number is for package of 12 O-rings–only two required per transmitter.

Hardware (continued)–One spare part recommended for every 50 transmitters.		
Part Description	**Item No.**	**Part Number**
Electronics Assembly Hardware(1)		01151-0030-0001
Standoff	8	
Standoff	5	
Screw	9	
Screw	3	
Locknut		
DP and HP Flange Kits, Carbon Steel(1)		01151-0031-0001
Bolt for Flange Adapter	22	(DP & HP Ranges 3–5) or
Bolt for Process Flange	13	01151-0031-0034
Nut for Process Flange	16	(DP Ranges 6–8,
		HP Ranges 6–7)
GP and AP Flange Kits, Carbon Steel(1)		01151-0031-0002
Bolt for Flange Adapter, Carbon Steel	22	(AP Ranges 4–5,
Bolt for Process Flange, Carbon Steel	13	GP Ranges 3–5)
Nut for Process Flange, Carbon Steel	16	or
		01151-0031-0035
		(AP & GP Ranges 6–8)
		or
		01151-0031-0003
		(GP Range 9)
		or
		01151-0031-0019
		(GP Range 0)
DP and HP Flange Kits, 316 SST(1)		01151-0031-0023
Bolt for Flange Adapter	22	(DP & HP Ranges 3–5) or
Bolt for Process Flange	13	01151-0031-0038
Nut for Process Flange	16	(DP Ranges 6–8,
		HP Ranges 6–7)
GP and AP Flange Kits, 316 SST(1)		01151-0031-0024
Bolt for Flange Adapter, 316 SST	22	(AP Ranges 4–5,
Bolt for Process Flange, 316 SST	13	GP Ranges 3–5)
Nut for Process Flange, 316 SST	16	or
		01151-0031-0039
		(AP & GP Ranges 6–8)
		or
		01151-0031-0025
		(GP Range 9)
		or
		01151-0031-0026
		(GP Range 0)
DP and HP Flange Kits, ANSI 193-B7(1)		01151-0031-0012
Bolt for Flange Adapter	22	(DP & HP Ranges 3–5) or
Bolt for Process Flange	13	01151-0031-0036
Nut for Process Flange	16	(DP Ranges 6–8,
		HP Ranges 6–7)
GP and AP Flange Kits, ANSI 193-B7(1)		01151-0031-0013
Bolt for Flange Adapter, ANSI 193-B7	22	(AP Ranges 4–5,
Bolt for Process Flange, ANSI 193-B7	13	GP Ranges 3–5)
Nut for Process Flange, ANSI 193-B7	16	or
		01151-0031-0037
		(AP & GP Ranges 6–8)
		or
		01151-0031-0014
		(GP Range 9)
		or
		01151-0031-0022
		(GP Range 0)

(1) Package contains quantity required for one transmitter.

Indicating Displays (Select approved meter kits for use in intrinsically safe and /or Type N installations)		
Part Description	**Item No.**	**Part Number**
Display Kits (includes LCD display, hardware, and housing cover assembly)		
Analog Display Kit, 4–20 mA dc, Linear Scale	NA	01151-1046-0007
Analog Display Kit, 4–20 mA dc, Square Root, 0-100% Flow		01151-1046-0009
Analog Display Kit, 10–50 mA dc, Linear Scale		01151-1046-0011
Analog Display Kit, 10–50 mA dc, Square Root, 0–100% Flow		01151-1046-0013
Approved Analog Display Kit, 4–20 mA dc, Linear Scale		01151-2615-0007
Approved Analog Display Kit, 4–20 mA dc, Square Root, 0-100% Flow		01151-2615-0009
Approved Analog Display Kit, 10–50 mA dc, Linear Scale		01151-2615-0011
Approved Analog Display Kit, 10–50 mA dc, Square Root, 0–100% Flow		01151-2615-0013
LCD Display Kit, Linear, 0–100%		01151-1046-0019
LCD Display Kit, Square Root, 0–100% Flow		01151-1046-0021
Displays Only		
Analog Display, 4–20 mA dc, Linear Scale		01151-0687-0004
Analog Display, 4–20 mA dc, Square Root, 0–100% Flow		01151-0687-0005
Analog Display, 4–20 mA dc, Square Root, 0–10 $\sqrt{}$		01151-0687-0008
Analog Display, 10–50 mA dc, Linear Scale		01151-0687-0006
Analog Display, 10–50 mA dc, Square Root, 0–100% Flow		01151-0687-0007
Analog Display, 10–50 mA dc, Square Root, 0–10 $\sqrt{}$		01151-0687-0009
Approved Analog Display, 4–20 mA dc, Linear Scale		01151-2614-0004
Approved Analog Display, 4–20 mA dc, Square Root, 0–100% Flow		01151-2614-0005
Approved Analog Display, 4–20 mA dc, Square Root, 0–10 $\sqrt{}$		01151-2614-0008
Approved Analog Display, 10–50 mA dc, Linear Scale		01151-2614-0006
Approved Analog Display, 10–50 mA dc, Square Root, 0–100% Flow		01151-2614-0007
Approved Analog Display, 10–50 mA dc, Square Root, 0–10 $\sqrt{}$		01151-2614-0009
LCD Display, Linear, 0–100%		01151-1300-1000
LCD Display, Square Root, 0–100% Flow		01151-1300-1001
LCD Display, Special Configuration(1)		See note (1) below
Display Hardware		
LCD Display Engineering Unit Labels		01151-1419-0001
Mounting Hardware and Cover Assembly Kit		01151-1046-0005
Mounting Hardware Kit		01151-1046-0006
Housing Cover Assembly Kit		01151-1047-0001
O-ring for Cover (pkg of 12)		01151-0033-0003

Mounting Brackets		
Part Description	**Item No.**	**Part Number**
B1—Right-angle Bracket for 2-in. Pipe Mounting	NA	01151-0036-0001
B2—Right-angle Bracket for Panel Mounting		01151-0036-0004
B3—Flat Bracket for 2-in. Pipe Mounting		01151-0036-0005
B4—Bracket for 2-in. Pipe with Series 316 SST Bolts		01151-0036-0003
B5—Bracket for Panel with Series 316 SST Bolts		01151-0036-0006
B6—Flat Bracket for 2-in. Pipe with Series 316 SST Bolts		01151-0036-0007
B7—316 SST B1 Bracket with 316 SST Bolts		01151-0036-0021
B9—316 SST B3 Bracket with 316 SST Bolts		01151-0036-0022

(1) To order a display with a special configuration, order the appropriate display and indicate configuration required. Since this is not a kit, order the mounting hardware and housing cover assembly separately.

Figure A-2. Rosemount 1151 Analog Pressure Transmitter Exploded View.

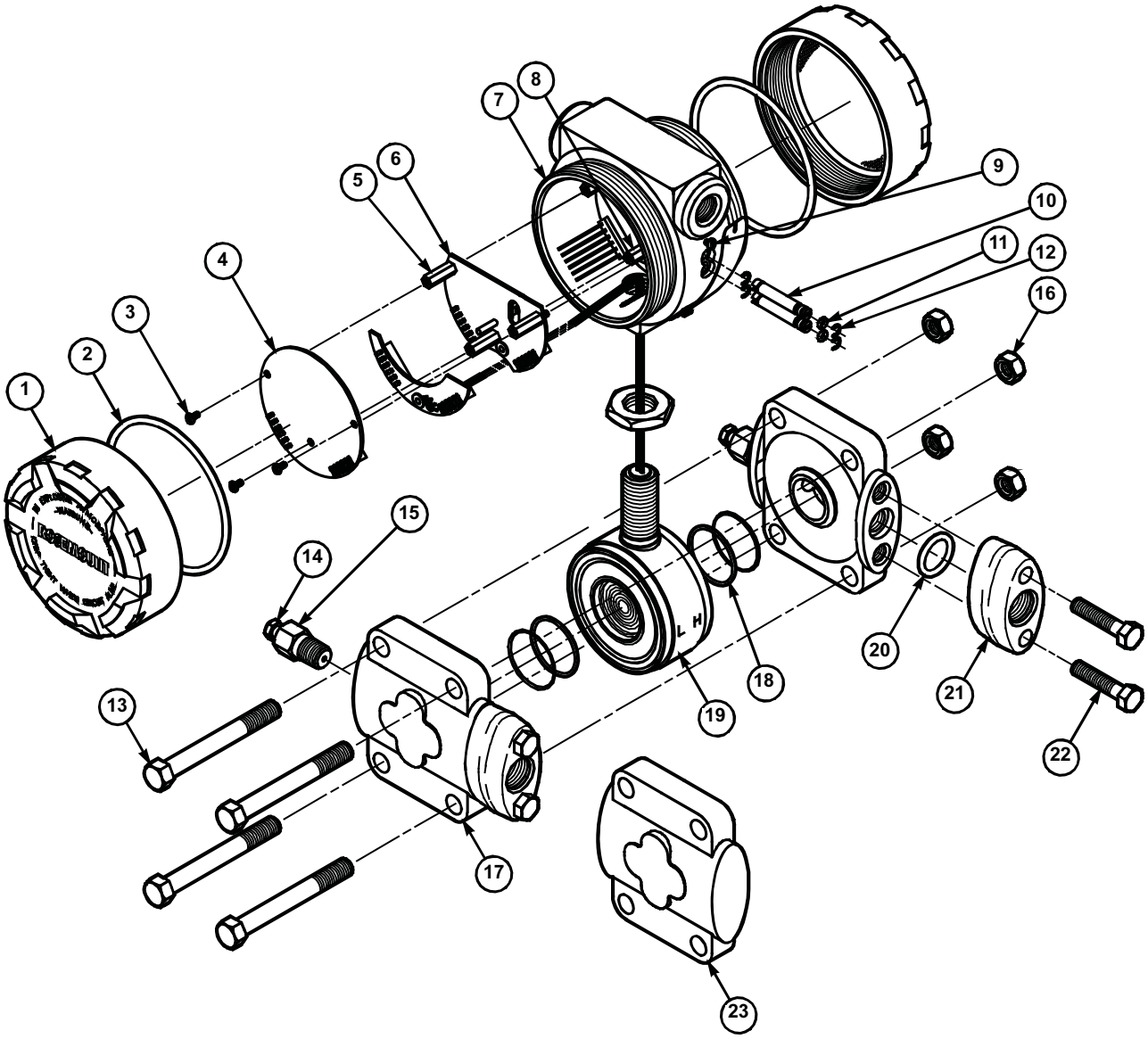

1151LT PARTS LIST Item numbers are references to figure callouts (page A-33 and page A-34).

Figure A-3. Rosemount 1151 Smart Pressure Transmitter Exploded View.

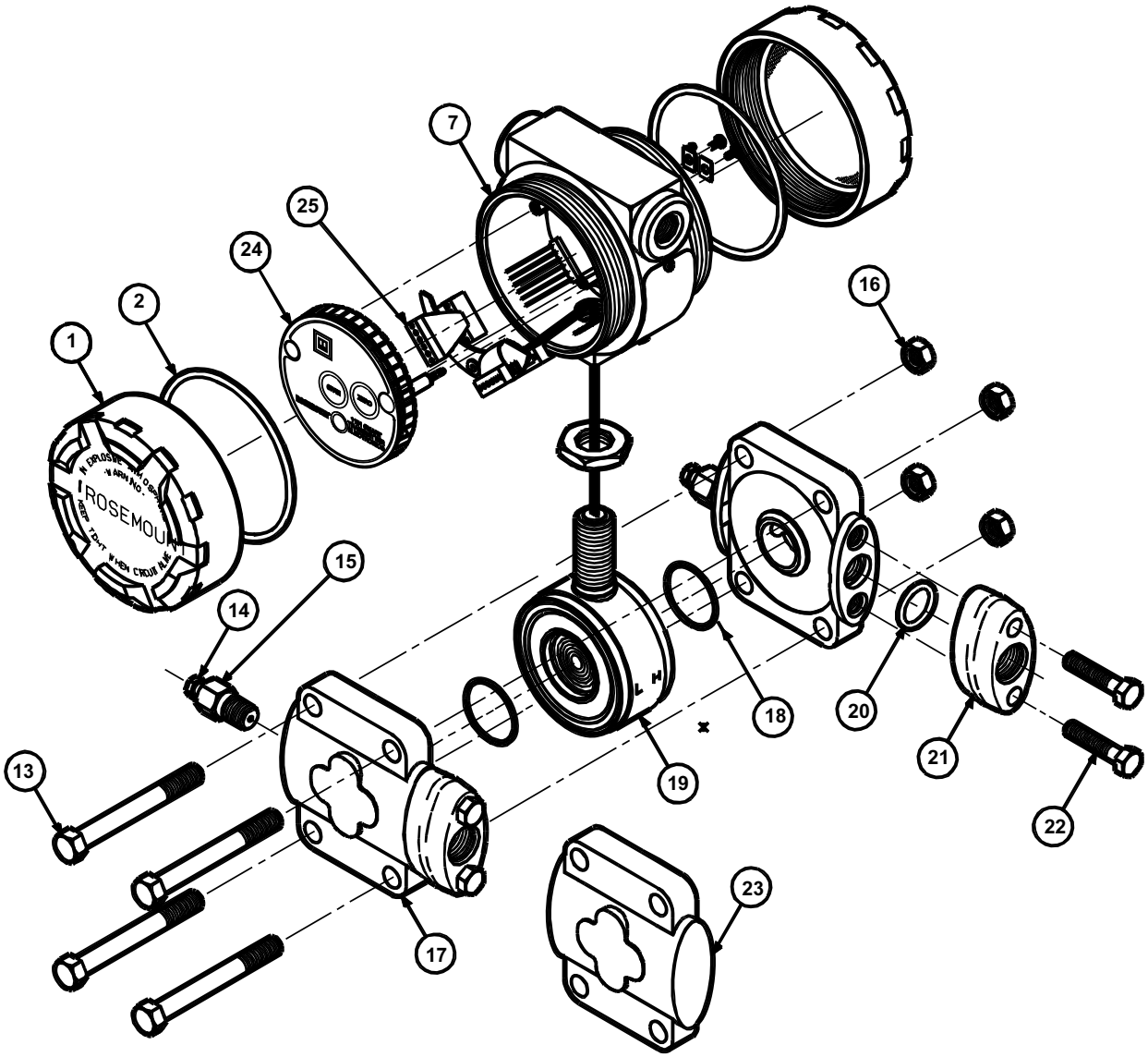

Table A-12. Rosemount 1151LT Flange-Mounted Liquid Level Pressure Transmitter.

Part Description	Item No.	Part Number	Spares Category[1]
Diaphragm and Sensor Module Assembly	13	See Note Below	B
Flange Adapter			
316 SST	21	01151-0211-0002	
Cast C-276		01151-0211-0004	
Valve Stem and Seat, 316 SST	18, 19	01151-0028-0012	
Plug, 316 SST (used with side drain/vent)		C50246-0002	A
Valve Stem and Seat, Alloy C-276	18, 19	01151-0028-0013	
Plug, Alloy C-276 (used with side drain/vent)		C50246-0202	A
Bolt for Flange Adaptor			
316 SST	20	01151-0031-0024	
ANSI 193-B7	20	01151-0031-0013	
O-ring for Flange Adapter			
Viton (pkg of 12)	22	01151-0035-0009	
Buna-N (pkg of 12)	22	01151-0035-0002	
Aflas (pkg of 12)	22	01151-0035-0008	
Ethylene-Prop. (pkg of 12)	22	01151-0035-0004	
PTFE (pkg of 12)	22	01151-0035-0003	
SMART OUTPUT CODE – See next page for details	—	01151-0935-0001	B
Electronics Housing (Aluminum)	7	01151-0060-0007	
Electronics Cover (Aluminum)	1	01151-1045-0001	
Adjustment Screw, Retaining Ring, and O-ring for Adjustment Screw Kit	10, 11, 12	01151-0029-0001	
O-ring for Electronics Cover [1]	2	01151-0033-0003	
Electronics Assembly Hardware			
Standoff			
Standoff	8	01151-0030-0001	
Screw	5		
Screw	9		
Locknut	3		
Output Code, 4-20 mA dc			E
Amplifier Circuit Board	4	01151-0137-0007	
Calibration Circuit Board	6	01151-0139-0001	
Output Code, 10-50 mA dc			G
Amplifier Circuit Board	4	01151-0597-0001	
Calibration Circuit Board	6	01151-0139-0001	

(1) Rosemount recommends one spare part for every 25 transmitters in Category A, and one spare part for every 50 transmitters in Category B.

NOTE
The Diaphragm and Sensor Module Assembly is an oil filled system and must be serviced using the proper equipment. Contact your nearest Emerson Process Management service facility should it become necessary to replace or service this assembly.

S Output Code (Smart) Part/Kit Description	Item No.	Part Number
Smart Retrofit Kit[1]		01151-0935-0001
Smart Transmitter Electronics[2]	24	01151-0948-0203
Board Spacer Kit (pkg of 12)	25	01151-0813-0001
Terminal Eyelet Kit (pkg of 12)		01151-0814-0001
Standoff Kit (pkg of 12)		01151-0815-0001
Cover[2]		01151-1045-0001
Cover O-ring (pkg of 12)		01151-0033-0003

Indicating Displays Part Description		Part Number
Display Kits (includes LCD display, hardware, and housing cover assembly)		
Analog Display Kit, 4–20 mA dc, Linear Scale		01151-1046-0007
Analog Display Kit, 10–50 mA dc, Linear Scale		01151-1046-0011
Approved Analog Display Kit, 4–20 mA dc, Linear Scale		01151-2615-0007
Approved Analog Display Kit, 10–50 mA dc, Linear Scale		01151-2615-0011
LCD Display Kit, Linear, 0–100%		01151-1046-0019
Displays Only		
Analog Display, 4–20 mA dc, Linear Scale		01151-0687-0004
Analog Display, 10–50 mA dc, Linear Scale		01151-0687-0006
Approved Analog Display, 4–20 mA dc, Linear Scale		01151-2614-0004
Approved Analog Display, 10–50 mA dc, Linear Scale		01151-2614-0006
LCD Display, Linear, 0–100%		01151-1300-1000
LCD Display, Special Configuration[3]		See note (3) below
Display Hardware		
LCD Display Engineering Unit Labels		01151-1419-0001
Mounting Hardware and Cover Assembly Kit		01151-1046-0005
Mounting Hardware Kit		01151-1046-0006
Housing Cover Assembly Kit		01151-1047-0001
O-ring for Cover (pkg of 12)		01151-0033-0003

(1) Kit contains enough parts for one transmitter and includes the smart transmitter electronics, board spacers, terminal eyelets, standoffs, cover, and cover O-rings.
(2) Kit contains enough parts for one transmitter.
(3) To order a display with a special configuration, order the appropriate display and indicate configuration required. Since this is not a kit, order the mounting hardware and housing cover assembly separately.

Figure A-4. Rosemount 1151LT Smart Pressure Transmitter Exploded View.

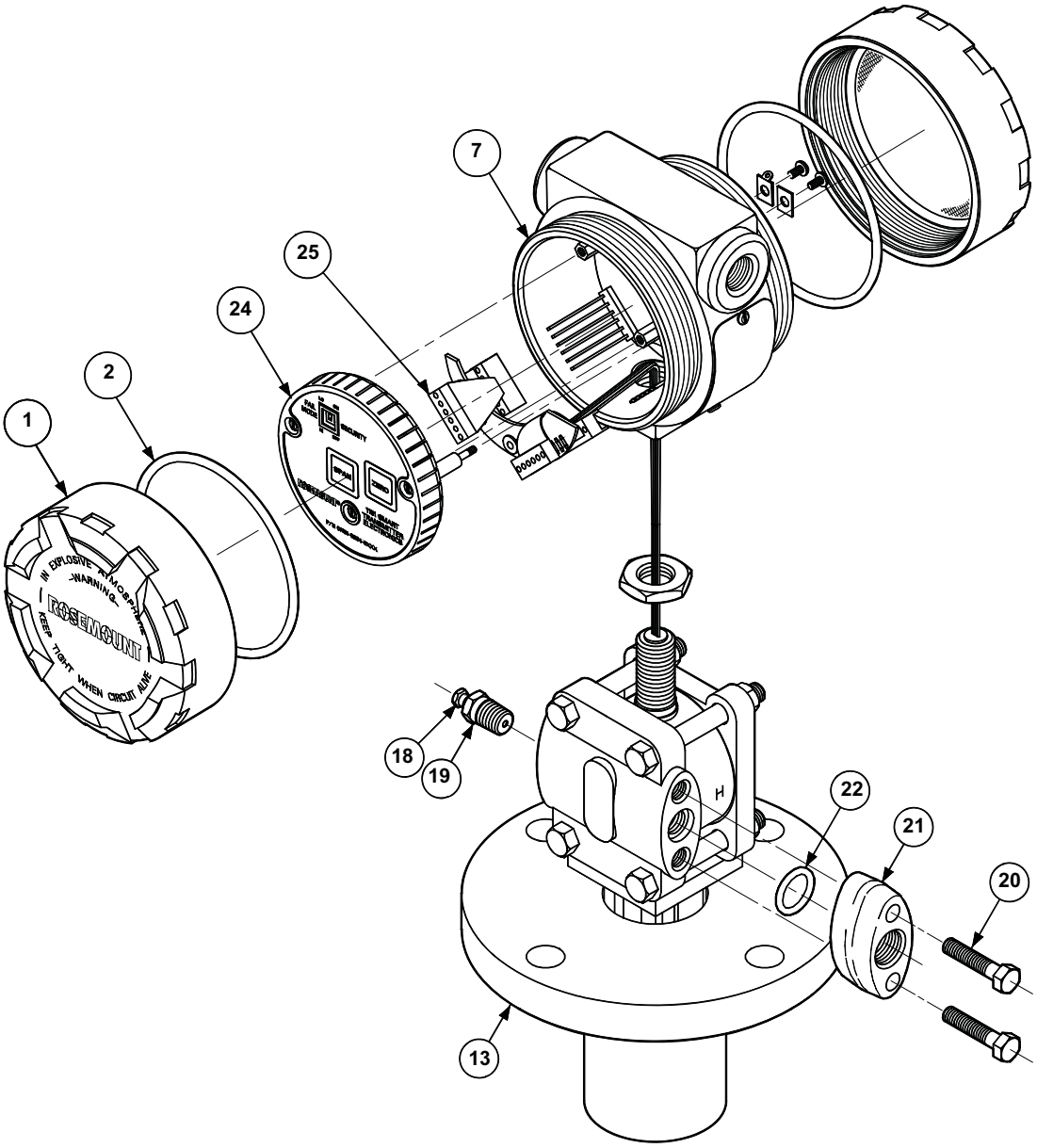

Figure A-5. Rosemount 1151LT Analog Pressure Transmitter Exploded View.

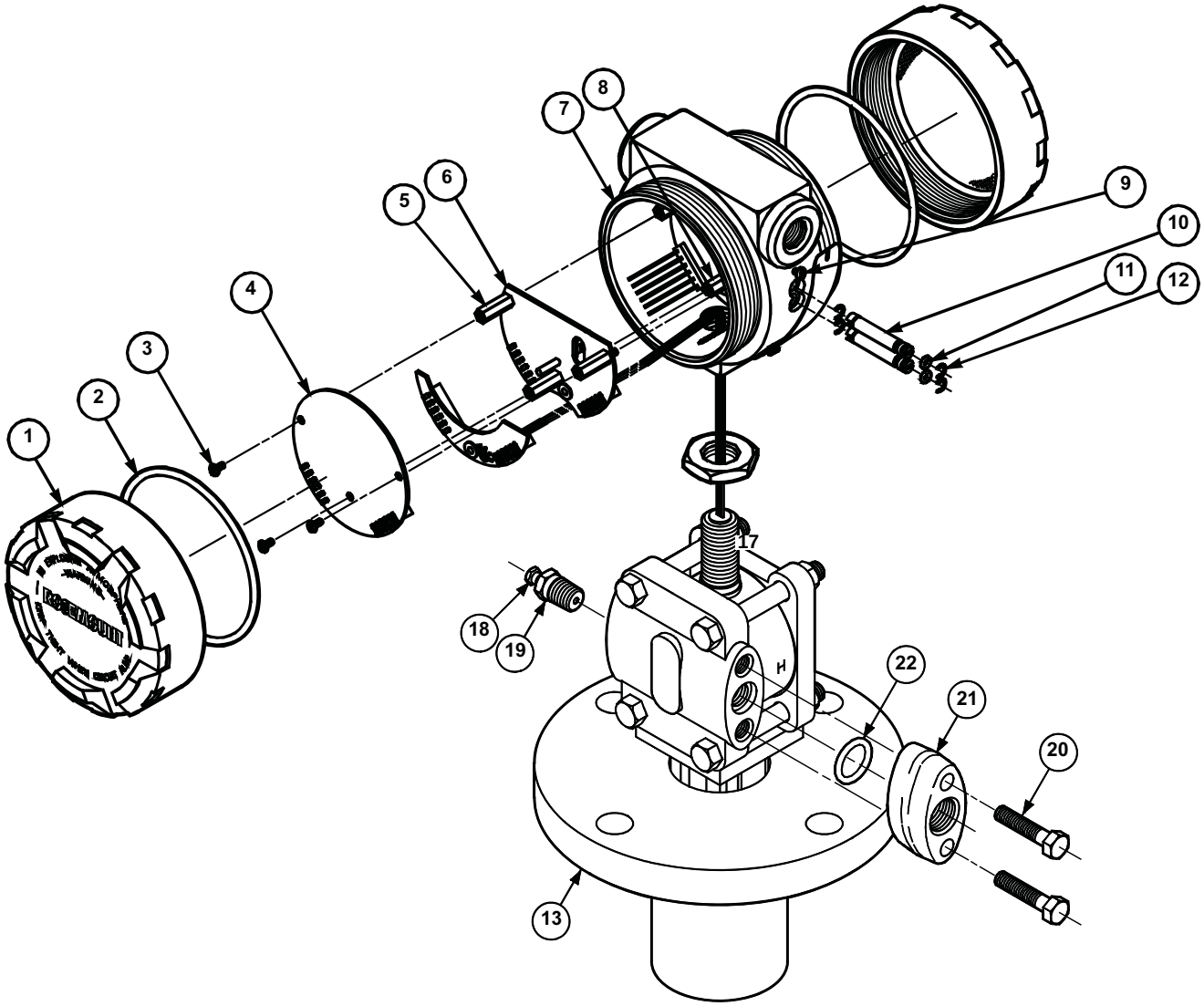

DISPLAY SPECIFICATIONS

Analog

- Meters have 2-in. (50.8 mm) scale
- Plug-in mounting configuration
- Indication accuracy ±2%
- Operating temperature limit: –40 to 150 °F (–40 to 65 °C)
- Meters are enclosed in a housing certified by Factory Mutual as Explosion-Proof for Class I, Division 1, Groups B, C, and D; Class II, Division 1, Groups E, F, and G and Class III, Division 1
- For optional CSA explosion-proof approval, see certification Option Code E6
- M1 Linear Analog Meter, 0–100% Scale
- M2 Square Root Analog Meter, 0–100% Flow Scale
- M6 Square Root Analog Meter, 0– 10√ Scale

LCD

- 4-digit display
- Indication accuracy ±0.25% of calibrated span ±1 digit
- Display resolution at ±0.5% of calibrated span ±1 digit
- Operating temperature limit: –4 to 158 °F (–20 to 70 °C)
- Plug-in mounting configuration
- Meters are enclosed in a housing certified by FM as Explosion-Proof for Class I, Division 1, Groups B, C, and D; Class II, Division 1, Groups E, F, and G and Class III, Division 1
- For Optional CSA explosion-proof approval, see certification Option Code E6
- M4 Linear LCD Meter, 0 to 100%
- M7 Special Scale LCD Meter
  - Specify:
    - Range (20 mA value must be greater than 4 mA value)
    - Mode
    - Engineering Units
- M8 Square Root LCD Meter, 0 to 100% Flow
- M9 Square Root LCD Meter, 0–10√ Scale

NOTES
Meter Options are not available with Output Codes L or M, or Option Codes V2 or V3. Meter Options M4, M7, M8, and M9 are not available with Output Code G.

Appendix B Product Certifications

Approved Manufacturing Locations . . . . . page B-1
European Directive Information . . . . . page B-1
Hazardous Locations Certifications . . . . . page B-2
Approval Drawings . . . . . page B-4

APPROVED MANUFACTURING LOCATIONS

Rosemount Inc. — Chanhassen, Minnesota, USA
Emerson Process Management GmbH & Co. — Wessling, Germany
Emerson Process Management Asia Pacific
Private Limited — Singapore
Beijing Rosemount Far East Instrument Co., Limited – Beijing, China

EUROPEAN DIRECTIVE INFORMATION

The EC declaration of conformity for all applicable European directives for this product can be found on the Rosemount website at www.rosemount.com. A hard copy may be obtained by contacting our local sales office.

ATEX Directive (94/9/EC)

Emerson Process Management complies with the ATEX Directive.

European Pressure Equipment Directive (PED) (2004/108/EC)

1151GP9, 0; 1151HP4, 5, 6, 7, Pressure Transmitters

— QS Certificate of Assessment - EC No. PED-H-100
Module H Conformity Assessment

All other 1151 Pressure Transmitters

— Sound Engineering Practice

Transmitter Attachments: Diaphragm Seal - Process Flange - Manifold

— Sound Engineering Practice

Electro Magnetic Compatibility (EMC) (2004/108/EC)

All models

— EN 61326-1: 1997 with Amendments A1, A2, and A3;

HAZARDOUS LOCATIONS CERTIFICATIONS

North American Certifications

Ordinary Location Certification for Factory Mutual

As standard, the transmitter has been examined and tested to determine that the design meets basic electrical, mechanical, and fire protection requirements by FM, a nationally recognized testing laboratory (NRTL) as accredited by the Federal Occupational Safety and Health Administration (OSHA).

Factory Mutual (FM) Approvals

FM Explosion-Proof tag is standard. Appropriate tag will be substituted if optional certification is selected.

Explosion-Proof: Class I, Division 1, Groups B, C, and D. Dust-Ignition Proof: Class II, Division 1, Groups E, F, and G; Class III, Division 1. Indoor and outdoor use. NEMA 4X. Factory Sealed.

I5 Intrinsically safe for Class I, II, and III Division 1, Groups A, B, C, D, E, F, and G hazardous locations in accordance with entity requirements and Control drawing 01151-0214 and 00268-0031. Non- incendive for Class I, Division 2, Groups A, B, C and D hazardous locations.

For entity parameters see control drawing 01151-0214.

Canadian Standards Association (CSA) Approvals

E6 Explosion-Proof for Class I, Division 1, Groups C and D; Class II, Division 1, Groups E, F, and G; Class III, Division 1 Hazardous Locations. Suitable for Class I, Division 2, Groups A, B, C, and D; CSA enclosure type 4X. Factory Sealed.

I6 Intrinsically safe for Class I, Division 1, Groups A, B, C, and D hazardous locations when connected per Drawing 01151-2575. For entity parameters see control drawing 01151-2575. Temperature Code T2D.

European Certifications

I1 ATEX Intrinsically Safe and Combustible Dust
(1151 Smart only)
Certificate No.: BAS99ATEX1294X
ATEX Marking Ⓔx II 1 GD
EEx ia IIC T5 (-60°C ≤ Ta ≤ 40°C)
EEx ia IIC T4 (-60°C ≤ Ta ≤ 80°C)
CE 1180
IP66

Table B-1. IS Entity Parameters

Ui = 30 V
Ii = 125 mA
Pi = 1.0 W (T4) or 0.67 W (T5)
Ci = 0.034 µF
Li = 20 µH

Special Conditions for Safe Use (x):

The apparatus, is not capable of withstanding the 500V test as required by EN 50020: 1994. This must be taken into account when installing the apparatus.

N1 ATEX Type n and Combustible Dust
(1151 Smart only)
Certificate No.: BAS 99ATEX3293X
ATEX marking: Ⓔx II 3 GD
EEx nL IIC T5 (-40°C ≤ Ta ≤ 40°C)
EEx nL IIC T4 (-40°C ≤ Ta ≤ 80°C)
Dust Rating: T90 °C (Ta = -20°C to 40°C)
U_i = 45 Vdc Max
CE
IP66

Special Conditions for Safe Use (x):
The apparatus is not capable of withstanding the 500V insulation test required by EN 50021: 1999. This must be taken into account when installing the apparatus.

E8 ATEX Flame-Proof
Certification Number CESI03ATEX037
ATEX Marking Ⓔx II 1/2 G
EEx d IIC T6 (–40 ≤ Ta ≤ 40 °C)
EEx d IIC T4 (–40 ≤ Ta ≤ 80 °C)
CE 1180
V = 60 Vdc maximum

Australian Certifications

Standards Association of Australia (SAA) Certification

E7 SAA Flame-proof
Certificate Number Ex 494X
Ex d IIB + H_2 T6
DIP T6
IP65

Special Conditions for safe use (x):
For transmitters having NPT, PG or G cable entry threads, an appropriate flame-proof thread adaptor shall be used to facilitate application of certified flame-proof cable glands or conduit system.

I7 SAA Intrinsically Safe
Certificate Number: Ex 122X
Ex ia IIB T5 (T_{amb} = 40 °C)
Ex ia IIB T4 (T_{amb} = 80 °C)

Special Conditions for Safe Use (x):
The equipment has been assessed to the entity concept and accordingly the following electrical parameters must be taken into account during installation.

Table B-2. Entity Parameters

U_i = 30V
I_i = 125 mA
P_i = 1.0 W (T4) or 0.67W (T5)
C_i = 14.8 nF
L_i = 20 μH

N7 SAA Type n
Certificate Number: Ex 887X
Ex n IIC T6 (T_{amb} = 40 °C)
Ex n IIC T5 (T_{amb} = 80 °C)
IP66

Special Conditions for safe use (x):
The equipment must be connected to a supply voltage which does not exceed the rated voltage. The enclosure end caps must be correctly fitted whilst the equipment is energized.

Combination Certifications

Stainless steel certification tag is provided when optional approval is specified. Once a device labeled with multiple approval types is installed, it should not be reinstalled using any other approval types. Permanently mark the approval label to distinguish it from unused approval types.

C6 Combination of I6 and E6,

K5 Combination of FM Approvals Explosion-Proof and I5.

K6 Combination of E6, I6, I1, and E8

APPROVAL DRAWINGS

Index of intrinsically safe barrier systems and entity parameters for Rosemount 1151 transmitters and Rosemount 751 Field Indicators (Drawing Number 01151-0214, Rev. V), pages B-5 through B-10.

Index of intrinsically safe C.S.A. barrier systems for Rosemount 1151 transmitters (Drawing Number 01151-2575, Rev. C), pages B-11 through B-13.

Index of intrinsically safe barrier systems and entity parameters for the HART Communicator SMART FAMILY Interface (Drawing Number 00268-0031, Rev M), pages B-14 through B-20.

Index of intrinsically safe barrier systems and entity parameters for the HART Communicator (Drawing Number 00275-0081, Rev B), pages B-21 through B-26.

Index of intrinsically safe C.S.A. barrier systems for the HART Communicator (Drawing Number 00275-0082, Rev A), page B-27.

Index of intrinsically safe barrier systems and entity parameters for the HART Communicator (Drawing Number 00375-1130, Rev B), page B-27 through page B-31.

Figure B-1.

REVISIONS					
LTR	DESCRIPTION	ECO NO	REV BY	APPR	DATE
P	Change entity parameters (Fm on re-exam) correct 444 CI	637376	WAR	WCR	9/28/90
R	Add 1151 Low Power Barrier System, Model 751 LI to 0	638105		WCR	4/27/90
T	1135, 1144, 1151 Li TO Ø	639039	SVC	WCR	1/23/91
U	1151 Li TO 20; Ci .01 AND .034	651426	SVC	[illegible]	12/11/92
V	751 Li TO Ø	662242		GSE	11/17/94

CONTENTS	
ENTITY APPROVALS	SHEETS 2 THRU 4
APPROVED PARAMETERS	SHEETS 2 THRU 3
CONNECTION DIAGRAMS	SHEET 4

MASTER

APPROVED SOURCES OF SUPPLY	
MFG	MFG PART NO

Material purchased to this Rosemount Specification Control Drawing shall be required to meet all the specifications of this drawing. Any mention of manufacturer's part number within this drawing is for reference only. This is necessary to ensure design control of Rosemount's end product. It is Rosemount's intent to purchase your standard material whenever possible.

SPECIFICATION CONTROL DRAWING

UNLESS OTHERWISE SPECIFIED, DIMENSIONS ARE IN INCHES.

TOLERANCES:

DECIMALS	FRACTIONS
.X ± .1	±1/32
.XX ± .02	ANGLES
.XXX ± .010	±2°

		DATE
PREPARED BY:	Nancy Nix	9/28/90
CHECKED BY:	WCR	
APPROVED BY Q.C.		
APPROVED BY ENG.	N C Kamat	9/28/90
APPROVED BY PURCH.		
FINAL APPROVAL ES		

ROSEMOUNT® Measurement Control Analytical Valves

TITLE
INDEX OF INTRINSICALLY SAFE BARRIER SYSTEMS & ENTITY PARAMETERS FOR 444, 1135, 1144, 1151, & 2051TRANSMITTERS AND 751 FIELD INDICATORS

SIZE	CODE IDENT NO	DRAWING NO
A	04274	01151-0214

SCALE None | U/M: Each | SHEET 1 OF 2

ENTITY CONCEPT APPROVALS

The entity concept allows interconnection of intrinsically safe apparatus to associated apparatus not specifically examined in combination as a system. The approved values of maximum open circuit voltage (V_{OC} or V_T) and maximum short circuit current (I_{SC} or I_T) for the associated apparatus must be less than or equal to the maximum safe input voltage (V_{MAX}) and input current (I_{MAX}) of the intrinsically safe apparatus. In addition, the approved maximum allowable connected capacitance (C_A) and inductance (L_A) of the associated apparatus must be greater than the maximum unprotected internal capacitance (C_I) and inductance (L_I) of the intrinsically safe apparatus. The approved entity concept parameters are as follows:

Model 444

Class I, Div. 1, Groups A and B

V_{MAX} = 40V	V_{OC} or V_T is less than or equal to 40V
I_{MAX} = 165 mA	I_{SC} or I_T is less than or equal to 165 mA
C_I = 0.044μF	C_A is greater than 0.0441F
L_I = 0	L_A is greater than 0

Class I, Div. 1, Groups C and D

V_{MAX} = 40V	V_{OC} or V_T is less than or equal to 40V
I_{MAX} = 225 mA	I_{SC} or I_T is less than or equal to 225 mA
C_I = 0.044μF	C_A is greater than 0.0441F
L_I = 0	L_A is greater than 0

Model 751

Class I, Div. 1, Groups A and B

V_{MAX} = 40V	V_{OC} or V_T is less than or equal to 40V
I_{MAX} = 165 mA	I_{SC} or I_T is less than or equal to 165 mA
C_I = 0	C_A is greater than 0
L_I = 0	L_A is greater than 0

Class I, Div. 1, Groups C and D

V_{MAX} = 40V	V_{OC} or V_T is less than or equal to 40V
I_{MAX} = 225 mA	I_{SC} or I_T is less than or equal to 225 mA
C_I = 0	C_A is greater than 0
L_I = 0	L_A is greater than 0

MASTER

Rosemount Inc. MINNEAPOLIS, MINNESOTA		SIZE A	FSCM. NO.	DRAWING NO. 01151-0214
DR.				
ISSUE		SCALE: NONE	WT.	SHEET 2 OF 6

MASTER

Model and 1151

Class I, Div. 1, Groups A and B

V_{MAX} = 40V	V_{OC} or V_T is less than or equal to 40V
I_{MAX} = 165 mA	I_{SC} or I_T is less than or equal to 165 mA
C_I(1151 Std) = 0	C_A is greater than 0
C_I(Smart 1151) = 0.024μF	C_A is greater than 0.024μF
C_I(1151 Std w/R Option) = 0.010μF	C_A is greater than 0.010μF
C_I(1151 Smart w/R_Option) = 0.034μF	C_A is greater than 0.034μF
L_I(1151 Std) = 0	L_A is greater than 0
L_I(1151 w/R_ Option) = 20μH	L_A is greater than 20 μH

Class I, Div. 1, Groups C and D

V_{MAX} = 40V	V_{OC} or V_T is less than or equal to 40V
I_{MAX} = 225 mA	I_{SC} or I_T is less than or equal to 225 mA
C_I(1151 Std) = 0	C_A is greater than 0
C_I(Smart 1151) = 0.024μF	C_A is greater than 0.024μF
C_I(1151 Std w/R Option) = 0.010μF	C_A is greater than 0.010μF
C_I(1151 Smart w/R_Option) = 0.034μF	C_A is greater than 0.034μF
L_I(1151 Std) = 0	L_A is greater than 0
L_I(1151 w/R_ Option) = 20μH	L_A is greater than 20 μH

Model 2051

Class I, Div. 1, Groups A and B

V_{MAX} = 40V	V_{OC} or V_T is less than or equal to 40V
I_{MAX} = 165 mA	I_{SC} or I_T is less than or equal to 165 mA
C_I = 0.012μF	C_A is greater than 0.012lF
L_I = 480μH	L_A is greater than 480lH

Class I, Div. 1, Groups C and D

V_{MAX} = 40V	V_{OC} or V_T is less than or equal to 40V
I_{MAX} = 225 mA	I_{SC} or I_T is less than or equal to 225 mA
C_I = 0.012μF	C_A is greater than 0.012lF
L_I = 480μH	L_A is greater than 480lH

Rosemount Inc. MINNEAPOLIS, MINNESOTA		SIZE A	FSCM. NO.	DRAWING NO.	01151-0214
DR.					
ISSUE		SCALE: NONE	WT.		SHEET 3 OF 6

Model 1135

Class I, Div. 1, Groups A and B

V_{MAX} = 40V	V_{OC} or V_T is less than or equal to 40V
I_{MAX} = 165 mA	I_{SC} or I_T is less than or equal to 165 mA
C_I = 0.008μF	C_A is greater than 0.008IF
L_I = 0	L_A is greater than 0

Class I, Div. 1, Groups C and D

V_{MAX} = 40V	V_{OC} or V_T is less than or equal to 40V
I_{MAX} = 225 mA	I_{SC} or I_T is less than or equal to 225 mA
C_I = 0.008μF	C_A is greater than 0.008IF
L_I = 0	L_A is greater than 0

Model 1144

Class I, Div. 1, Groups A and B

V_{MAX} = 40V	V_{OC} or V_T is less than or equal to 40V
I_{MAX} = 165 mA	I_{SC} or I_T is less than or equal to 165 mA
C_I = 0	C_A is greater than 0
L_I = 0	L_A is greater than 0

Class I, Div. 1, Groups C and D

V_{MAX} = 40V	V_{OC} or V_T is less than or equal to 40V
I_{MAX} = 225 mA	I_{SC} or I_T is less than or equal to 225 mA
C_I = 0	C_A is greater than 0
L_I = 0	L_A is greater than 0

MASTER

Rosemount Inc. MINNEAPOLIS, MINNESOTA		SIZE A	FSCM. NO.	DRAWING NO.	01151-0214
DR.					
ISSUE		SCALE: NONE	WT.		SHEET 4 OF 6

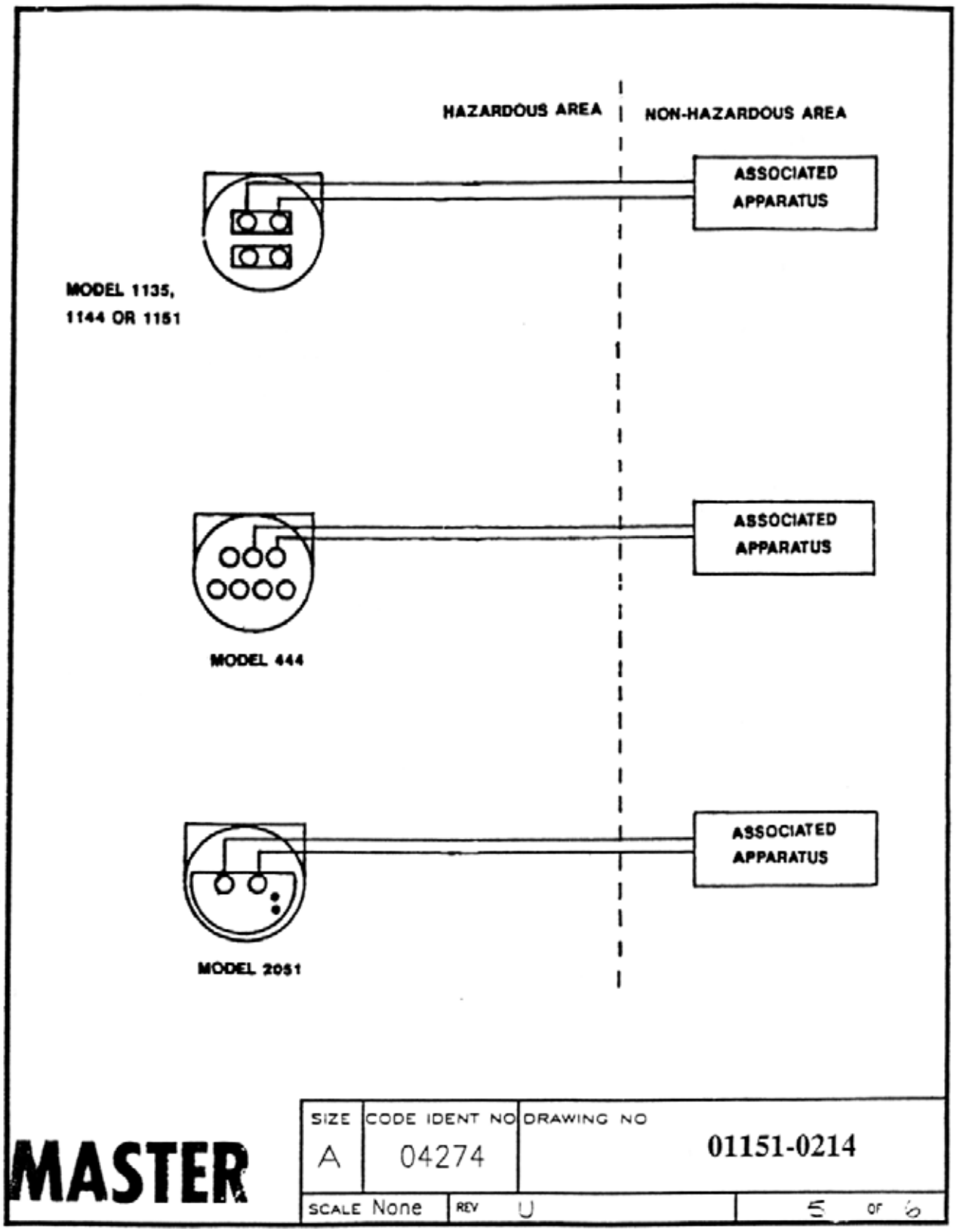
HAZARDOUS AREA
NON-HAZARDOUS AREA
ASSOCIATED APPARATUS
MODEL 1135, 1144 OR 1151
ASSOCIATED APPARATUS
MODEL 444
ASSOCIATED APPARATUS
MODEL 2051
MASTER
SIZE
A
CODE IDENT NO
04274
DRAWING NO
01151-0214
SCALE None
REV U
5 OF 6

1151 --- L & M CIRCUIT CONNECTION WITH INTRINSIC SAFETY BARRIERS

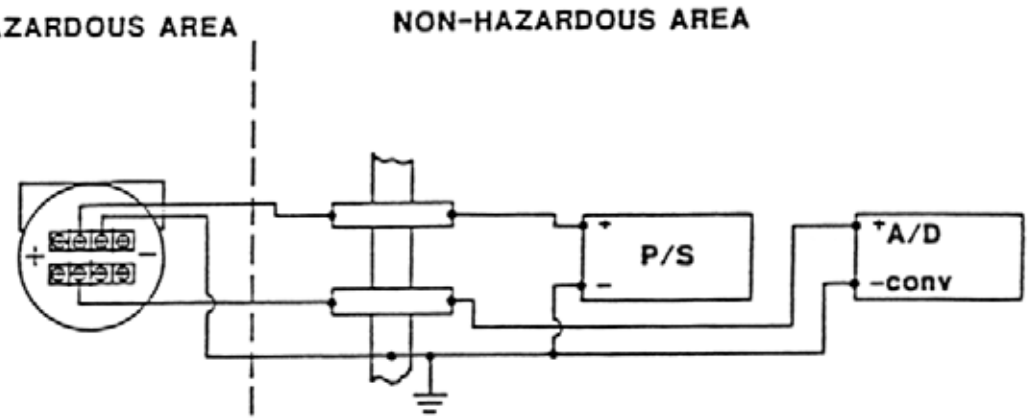

Two Single Channel Barriers

CIRCUIT DIAGRAM 1

(ONLY FOR USE WITH BARRIERS APPROVED IN THIS CONFIGURATION)

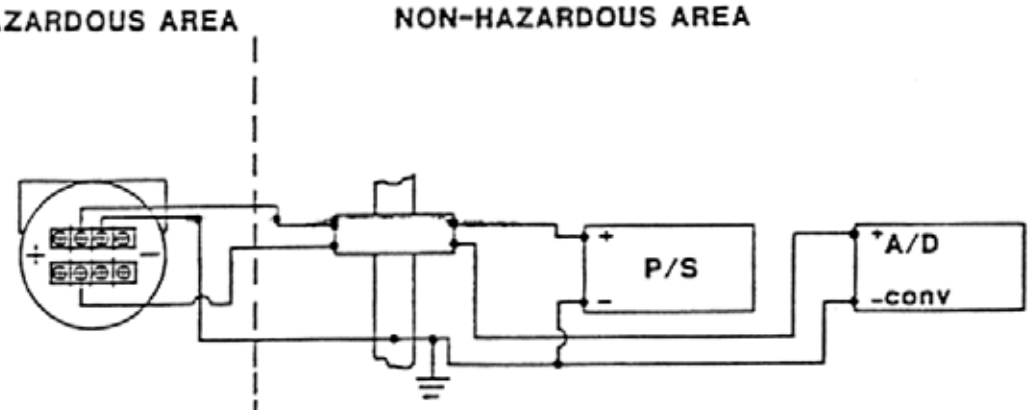

One Dual Channel Barrier

CIRCUIT DIAGRAM 2

MASTER

SIZE	CODE IDENT NO	DRAWING NO
A	04274	01151-0214
SCALE NONE	REV U	6 OF 6

Figure B-2.

PROPRIETARY INFORMATION IS CONTAINED HEREIN AND MUST BE HANDLED ACCORDINGLY
BY _____ DATE _____

REVISIONS

REV	DESCRIPTION	CHG. NO.	APP'D	DATE
A	NEW RELEASE	646666	W.C.R.	04/01/92
B	150 ohms was 120 ohms	650816	J.J.B.	11/13/92
C	150 ohms was 120 ohms (SHT 3)	652195	J.J.B.	1/29/93

CSA INTRINSICALLY SAFE APPROVAL

Exia
Intrinsically Safe /Securite Intrinseque

THE ROSEMOUNT MODEL 1151 PRESSURE TRANSMITTER IS APPROVED BY CSA AS INTRINSICALLY SAFE FOR THE CLASS I, DIVISION 1 GROUPS AS INDICATED WHEN USED WITH THE BARRIERS AND CONVERTERS LISTED BELOW AND CONNECTED AS SHOWN IN THE ACCOMPANYING DIAGRAMS.

DEVICE	PARAMETERS	APPROVED FOR CLASS I, DIV. 1
CSA Approved Safety Barrier	30 V or less 330 ohms or more 28 V or less 300 ohms or more 22 V or less 180 ohms or more	Groups A, B, C, D
Foxboro Converter 2AS-I3I-CGB, 3AD-I3IA CS-E /CGB-A, 2AI-I3V-CGB, 3A2-I3D CS-E /CGB-A, 2AI-I2V-CGB, 3A2-I2D CS-E /CGB-A, 2AS-I2I-CGB, 3A4-I2DA CS-E /CGB-A, 3F4-I2DA1 CS-E /CGB-A		Groups B, C, D
CSA Approved Safety Barrier	30 V or less 150 ohms or more	Groups C, D

THIS DRAWING WAS CREATED ON CAD. DRAWING IS ARCHIVED ON MAGNETIC TAPE FOR ECO CHANGES.

UNLESS OTHERWISE SPECIFIED DIMENSIONS IN INCHES. REMOVE ALL BURRS AND SHARP EDGES. MACHINE SURFACE FINISH 125

- TOLERANCES -

DECIMALS .X±.1 .XX±.02 .XXX±.010
FRACTIONS ±1/32
ANGLES ±2°

DO NOT SCALE PRINT

CONTRACT NO.
DR. S.CAPAUL 03/18/92
CHK'D W.C.RAUTH 04/01/92
APP'D. W.C.RAUTH 04/01/92
APP'D. GOVT.

ROSEMOUNT® Measurement Control Analytical Valves

Rosemount Inc.
12001 Technology Drive
Eden Prairie, MN 55344 USA

TITLE INDEX OF CSA INTRINSICALLY SAFE BARRIER SYSTEMS FOR MODEL 1151 TRANSMITTERS

SIZE A | FSCM NO | DWG NO. 01151-2575
SCALE N/A | WT. _____ | SHEET 1 OF 3

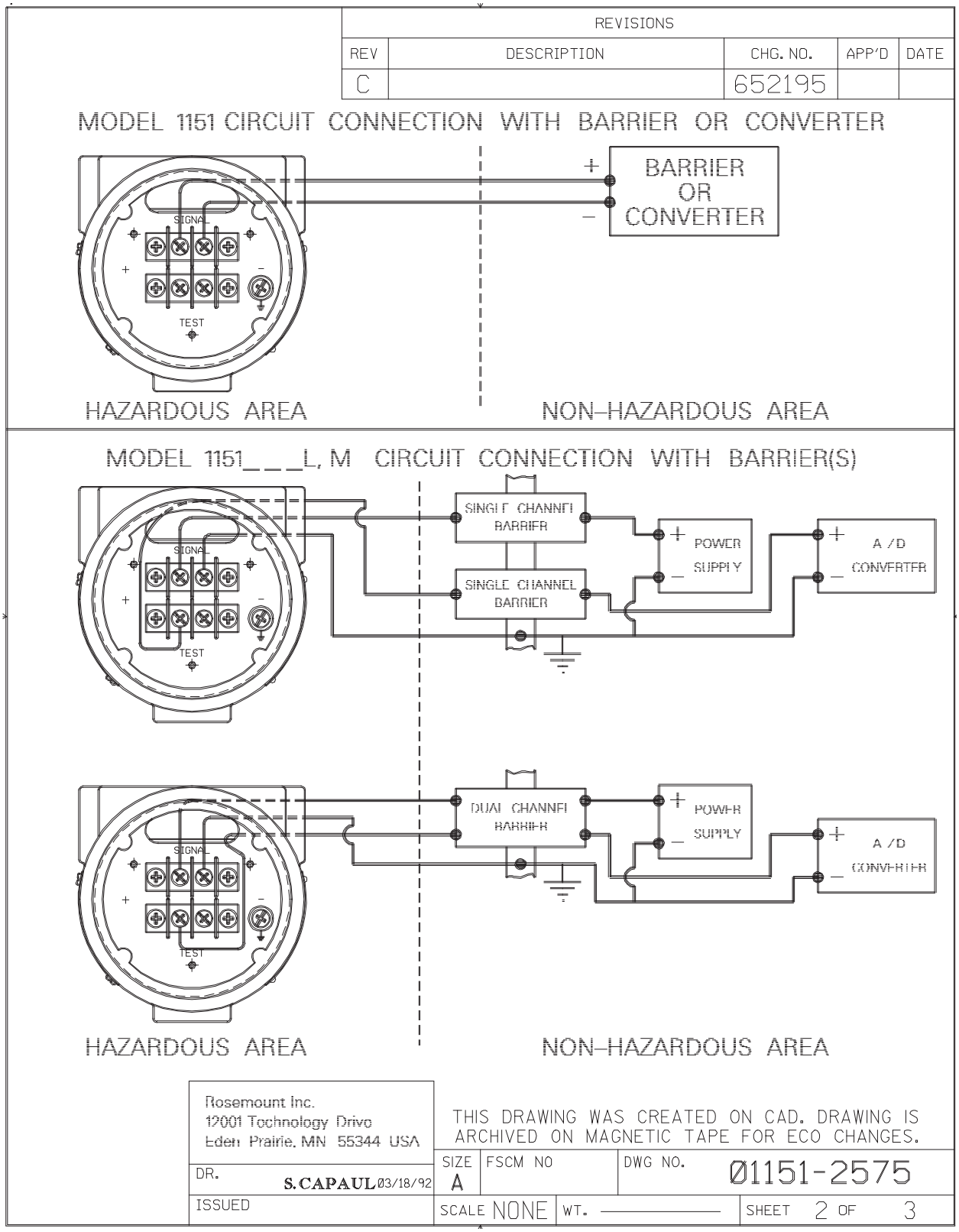
REVISIONS
REV
DESCRIPTION
CHG. NO.
APP'D
DATE
C
652195
MODEL 1151 CIRCUIT CONNECTION WITH BARRIER OR CONVERTER
SIGNAL
TEST
BARRIER OR CONVERTER
HAZARDOUS AREA
NON-HAZARDOUS AREA
MODEL 1151___L, M CIRCUIT CONNECTION WITH BARRIER(S)
SINGLE CHANNEL BARRIER
SINGLE CHANNEL BARRIER
POWER SUPPLY
A/D CONVERTER
DUAL CHANNEL BARRIER
POWER SUPPLY
A/D CONVERTER
HAZARDOUS AREA
NON-HAZARDOUS AREA
Rosemount Inc.
12001 Technology Drive
Eden Prairie, MN 55344 USA
THIS DRAWING WAS CREATED ON CAD. DRAWING IS ARCHIVED ON MAGNETIC TAPE FOR ECO CHANGES.
DR.
S.CAPAUL 03/18/92
ISSUED
SIZE A
FSCM NO
DWG NO. 01151-2575
SCALE NONE
WT.
SHEET 2 OF 3

REVISIONS				
REV	DESCRIPTION	CHG. NO.	APP'D	DATE
C		652195		

MODEL 1151_ _ _L, M CIRCUIT CONNECTION WITH BARRIER(S)
(CONTINUED)

APPROVED FOR CLASS I, DIVISION 1, GROUPS A, B, C, D WHEN USED IN CIRCUIT WITH TWO CSA APPROVED SINGLE CHANNEL SAFETY BARRIERS; ONE WITH APPROVED SAFETY PARAMETERS OF 28 VOLTS OR LESS AND 300 OHMS OR MORE IN +POWER LINE, AND THE OTHER WITH APPROVED SAFETY PARAMETERS OF 10 VOLTS OR LESS AND 47 OHMS OR MORE IN +OUTPUT LINE.

–OR–

ONE CSA APPROVED DUAL CHANNEL SAFETY BARRIER WITH IDENTICAL APPROVED SAFETY PARAMETERS CONNECTED IN LIKE MANNER.

APPROVED FOR CLASS I, DIVISION 1, GROUPS C, D WHEN USED IN CIRCUIT WITH TWO CSA APPROVED SINGLE CHANNEL SAFETY BARRIERS; ONE WITH APPROVED SAFETY PARAMETERS OF 30 VOLTS OR LESS AND 150 OHMS OR MORE IN +POWER LINE AND THE OTHER WITH APPROVED SAFETY PARAMETERS OF 10 VOLTS OR LESS AND 47 OHMS OR MORE IN +OUTPUT LINE.

Rosemount Inc. 12001 Technology Drive Eden Prairie, MN 55344 USA	THIS DRAWING WAS CREATED ON CAD. DRAWING IS ARCHIVED ON MAGNETIC TAPE FOR ECO CHANGES.		
DR. S.CAPAUL 03/30/92	SIZE A	FSCM NO	DWG NO. 01151-2575
ISSUED	SCALE N/A	WT. ———	SHEET 3 OF 3

Figure B-3.

PROPRIETARY INFORMATION IS CONTAINED HEREIN AND MUST BE HANDLED ACCORDINGLY
BY _____ DATE _____

REVISIONS

REV	DESCRIPTION	CHG. NO.	APP'D	DATE
G	ADD SHT 4&5, DELETE CLASS II &III.	636328	B.S.J.	08/01/90
H	ADD 3051 P/L/H, 3001C CL /CH	636904	K.D.V.	09/06/90
J	ADD SHT. 6, FIX TBL. 1.	638723	B.S.J.	01/02/91
K	ADD 3044C	641710	W.R.K.	06/13/91
L	ADD 3001S & SHT 7 FOR 3051C-LP	642380	G.E.M.	8/13/91
M	ADD 3095	653145	K.D.V.	4/8/93

THE ROSEMOUNT MODEL 268 SMART FAMILY INTERFACE IS APPROVED BY FACTORY MUTUAL AS INTRINSICALLY SAFE FOR THE CLASS I, DIVISION 1 GROUPS INDICATED WHEN USED IN CIRCUIT WITH THE BARRIERS AND CONVERTERS LISTED BELOW AND THE ROSEMOUNT SMART FAMILY TRANSMITTERS DEPICTED IN THE ACCOMPANYING CIRCUIT DIAGRAMS.

BARRIER MANUFACTURER	MODEL	APPROVED FOR CLASS I DIVISION 1, GROUPS
FOXBORO	2AI-I2V-FGB	A,B,C,D
	2AI-I3V-FGB	↓
	2AS-I3I-FGB	↓
	3A2-I2D-CS-E/FGB-A	↓
	3A2-I3D-CS-E/FGB-A	↓
HONEYWELL	38545-000-0110-113-F5B5	↓
	38545-000-0110-111/112-F5B5	C,D
MTL	115	A,B,C,D
	122	↓
	322	↓
	715	↓
	722	↓
R. STAHL	8901/31-199/100/7	↓
	8901/30-199/100/7	↓
	8901/31-280/165/7	C,D
	8901/30-280/165/7	C,D
	8903/51-200/050/7	A,B,C,D
	8901/31-086/150/7	A,B,C,D
	8901/31-280/165/7	C,D
	8901/31-086/150/7	C,D
	9005/01-245/060	A,B,C,D
	9005/01-252/100	A,B,C,D
TAYLOR	5850FL81200	C,D
	5851FL81200	↓
	1130FF21000	↓
	1130FF22000	↓
	1135FF21000	↓
	1135FF22000	↓

THIS DRAWING WAS CREATED ON CAD. DRAWING IS ARCHIVED ON MAGNETIC TAPE FOR ECO CHANGES.

UNLESS OTHERWISE SPECIFIED DIMENSIONS IN INCHES. REMOVE ALL BURRS AND SHARP EDGES. MACHINE SURFACE FINISH 125

- TOLERANCES -

DECIMALS .X±.1 .XX±.02 .XXX±.010
FRACTIONS ±1/32
ANGLES ±2°

DO NOT SCALE PRINT

CONTRACT NO.
DR. MIKE DOBE 2/7/90
CHK'D
APP'D. K.CARLSON 03/13/90
APP'D. GOVT.

ROSEMOUNT® Measurement Control Analytical Valves

Rosemount Inc.
12001 Technology Drive
Eden Prairie, MN 55344 USA

TITLE INDEX OF I.S. BARRIER SYSTEMS FOR MOD. 268 SMART FAMILY INTERFACE

SIZE A | FSCM NO | DWG NO. 00268-0031
SCALE | WT. _____ | SHEET 1 OF 7

FORM NO. 60651A-1 REV. C

REVISIONS				
REV	DESCRIPTION	CHG. NO.	APP'D	DATE
M		653145		

ENTITY CONCEPT APPROVALS

THE ENTITY CONCEPT ALLOWS INTERCONNECTION OF INTRINSICALLY SAFE APPARATUS TO ASSOCIATED APPARATUS NOT SPECIFICALLY EXAMINED IN COMBINATION AS A SYSTEM. THE APPROVED VALUES OF MAXIMUM OPEN CIRCUIT VOLTAGE (V_T OR V_{OC}) AND MAXIMUM SHORT CIRCUIT CURRENT (I_T OR I_{SC}) AND MAXIMUM OUTPUT POWER ($\frac{V_{OC} \times I_{SC}}{4}$ OR $\frac{V_T \times I_T}{4}$), FOR THE ASSOCIATED APPARATUS MUST BE LESS THAN OR EQUAL TO THE MAXIMUM SAFE INPUT VOLTAGE (V_{MAX}), MAXIMUM SAFE INPUT CURRENT (I_{MAX}) AND MAXIMUM SAFE INPUT POWER (P_{MAX}) OF THE INTRINSICALLY SAFE APPARATUS. IN ADDITION, THE APPROVED MAXIMUM ALLOWABLE CONNECTED CAPACITANCE (C_A) AND INDUCTANCE (L_A) OF THE ASSOCIATED APPARATUS MUST BE GREATER THAN THE MAXIMUM UNPROTECTED INTERNAL CAPACITANCE (C_I) AND INDUCTANCE (L_I) OF THE INTRINSICALLY SAFE APPARATUS. THE APPROVED ENTITY CONCEPT PARAMETERS ARE AS FOLLOWS: ARE AS FOLLOWS:

NOTE: ENTITY PARAMETERS LISTED APPLY ONLY TO ASSOCIATED APPARATUS WITH LINEAR OUTPUT.

INPUT PARAMETERS (CLASS I, DIV. 1, GROUPS A, B, C, D)				
Vmax = 32 Vdc				V_T or Voc of barrier must be $\leq$ 32 Vdc
Imax = 186 mA				I_T or Isc of barrier must be $\leq$ 186 mA
C_I = 0.01 µF				C_A of barrier must be $\geq$ 0.01 µF
L_I = 1.1 mH				L_A of barrier must be $\geq$ 1.1 mH
Pmax:	1.1W	0.8W	0.6W	$\frac{Voc \times Isc}{4}$ of barrier must be $\leq$ specified value.
Temp code	T4A	T5	T6	

OUTPUT PARAMETERS
Voc = 1.5 Vd.c.
Isc = 27 mA
C_A = 10,000 µF
L_A = 46 mH

Rosemount Inc.
12001 Technology Drive
Eden Prairie, MN 55344 USA

THIS DRAWING WAS CREATED ON CAD. DRAWING IS ARCHIVED ON MAGNETIC TAPE FOR ECO CHANGES.

DR. D.PEARSON	SIZE A	FSCM NO	DWG NO. 00268-0031
ISSUED	SCALE N/A	WT. ———	SHEET 2 OF 7

FORM NO. 60651A-1 REV. C

REVISIONS				
REV	DESCRIPTION	CHG. NO.	APP'D	DATE
M		653145		

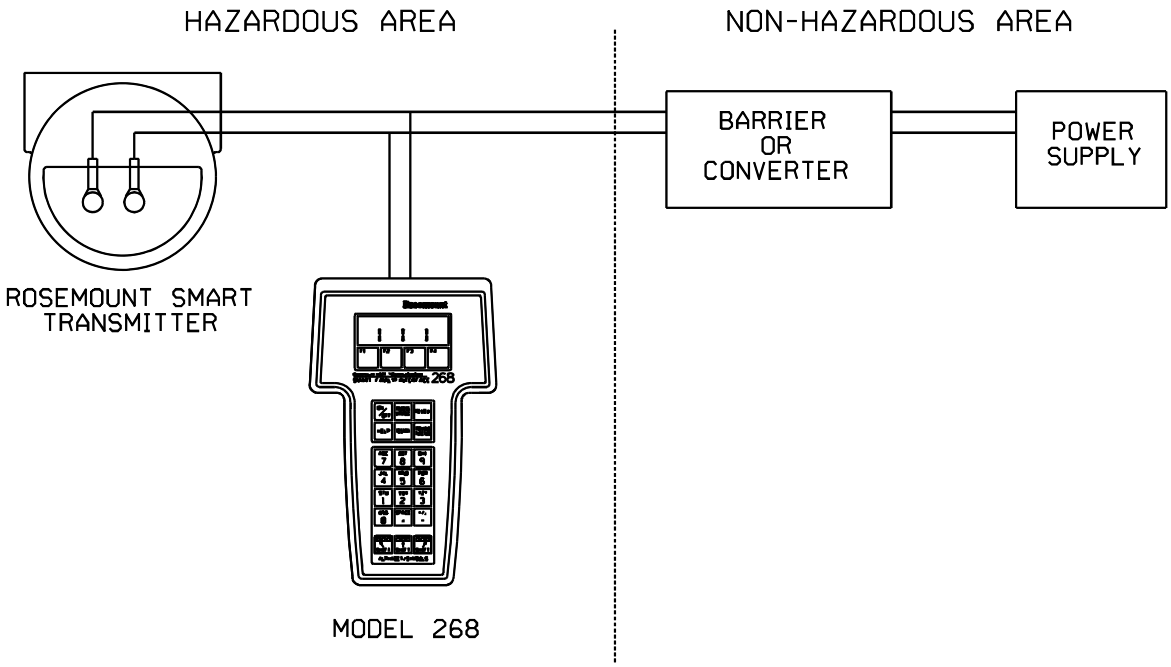

ROSEMOUNT SMART TRANSMITTERS

MODEL	1151 SMART
MODEL	3051
MODEL	3051C, 3051P, 3051L, 3051H, 3051CA
MODEL	3044
MODEL	3044C
MODEL	3001C, 3001CL, 3001CH
MODEL	3311
MODEL	3001S, 3001SL, 3001SH
MODEL	3095

UP TO FOUR MODEL 751 INDICATORS MAY BE WIRED IN SERIES WITH THE TRANSMITTERS SHOWN ABOVE AND MAY BE LOCATED IN EITHER THE HAZARDOUS OR NON-HAZARDOUS AREA

Rosemount Inc.
12001 Technology Drive
Eden Prairie, MN 55344 USA

THIS DRAWING WAS CREATED ON CAD. DRAWING IS ARCHIVED ON MAGNETIC TAPE FOR ECO CHANGES.

DR. D.PEARSON	SIZE A	FSCM NO	DWG NO. 00268-0031
ISSUED	SCALE N/A	WT. ———	SHEET 3 OF 7

FORM NO. 60651A-1 REV. C

REVISIONS				
REV	DESCRIPTION	CHG. NO.	APP'D	DATE
M		653145		

THE MAXIUM ALLOWABLE CONNECTED INDUCTANCE (La) OF THE ASSOCIATED APPARATUS IS DETERMINED BY ADDING 27 mA TO THE Isc OF THE BARRIER (Im=Isc + 27mA AND ENTERING TABLE 1 (SHT 5) AT THE RESULTING VALUE, Im, OR THE NEXT HIGHER VALUE OF Im, TO DETERMINE THE La, (THE La MUST INCLUDE THE L_1 OF THE MODEL 268, WHICH IS 1.1mH).

EXAMPLE #1: Isc OF BARRIER = 100mA.

Im = 100mA + 27mA = 127mA

ENTER TABLE AT Im = 130mA; La = 2.0mH

--WARNING-- BEFORE CONNECTING THE MODEL 268 INTO THE LOOP, DETERMINE THE CONNECTED INDUCTANCE OF THE SYSTEM BY ADDING THE L_1 OF THE TRANSMITTER, CABLE, AND MODEL 268. THE SUM MUST BE LESS THAN THE La DETERMINED FROM THE TABLE IN ORDER FOR THE MODEL 268 TO BE CONNECTED INTO THE LOOP. IF THE CONNECTED INDUCTANCE IS GREATER THAN THE VALUE DETERMINED FROM THE TABLE, A BARRIER WITH A LOWER Isc MUST BE CHOSEN.

EXAMPLE #2: BARRIER ISC = 41.8mA; BARRIER LA = 20.0mH

IM = 41.8mA + 27mA = 68.8mA;

ENTER TABLE AT 70mA AND READ La = 7.5mH

ADD CONNECTED INDUCTANCE OF SYSTEM:

MODEL 268	L_1 = 1.1mH
MODEL 3051 TRANSMITTER	L_1 = 0.48mH
INDUCTANCE OF LOOP WIRING	1.0mH
TOTAL CONNECTED INDUCTANCE	= 2.58mH

TOTAL CONNECTED INDUCTANCE IS LESS THAN La = 7.5 mH AS DETERMINED ABOVE AND IS ALSO LESS THAN THE BARRIER La. THE MODEL 268 MAY SAFELY BE CONNECTED INTO THE LOOP. IF THE MODEL 751 INDICATORS ARE USED, THEIR TOTAL INDUCTANCE (LABEL VALUE * NUMBER OF INDICATORS) MUST ALSO BE INCLUDED.

S.BARDUSON 30JUL90

SIZE	FSCM NO	DWG NO.	
A			00268-0031
SCALE N/A	WT. ———	SHEET 4 OF 7	

FORM NO. 60651A-1 REV. C

REVISIONS				
REV	DESCRIPTION	CHG. NO.	APP'D	DATE
M		653145		

Im (mA)	La ()mH)
150	1.3
145	1.5
140	1.6
130	2.0
120	2.5
110	3.0
100	4.0
90	5.0
85	5.5
80	6.0
75	6.7
70	7.5
65	8.8
62	9.5
60	10.0
57	11.0
55	12.0
50	15.0
45	19.0
40	23.0
35	31.0

TABLE 1

Rosemount Inc.
12001 Technology Drive
Eden Prairie, MN 55344 USA

THIS DRAWING WAS CREATED ON CAD. DRAWING IS ARCHIVED ON MAGNETIC TAPE FOR ECO CHANGES.

DR. S.BARDUSON 30JUL90

ISSUED

SIZE A | FSCM NO | DWG NO. 00268-0031

SCALE N/A | WT. ——— | SHEET 5 OF 7

FORM NO. 60651A-1 REV. C

REVISIONS				
REV	DESCRIPTION	CHG. NO.	APP'D	DATE

TAYLOR 1152FZ81110 SYSTEM

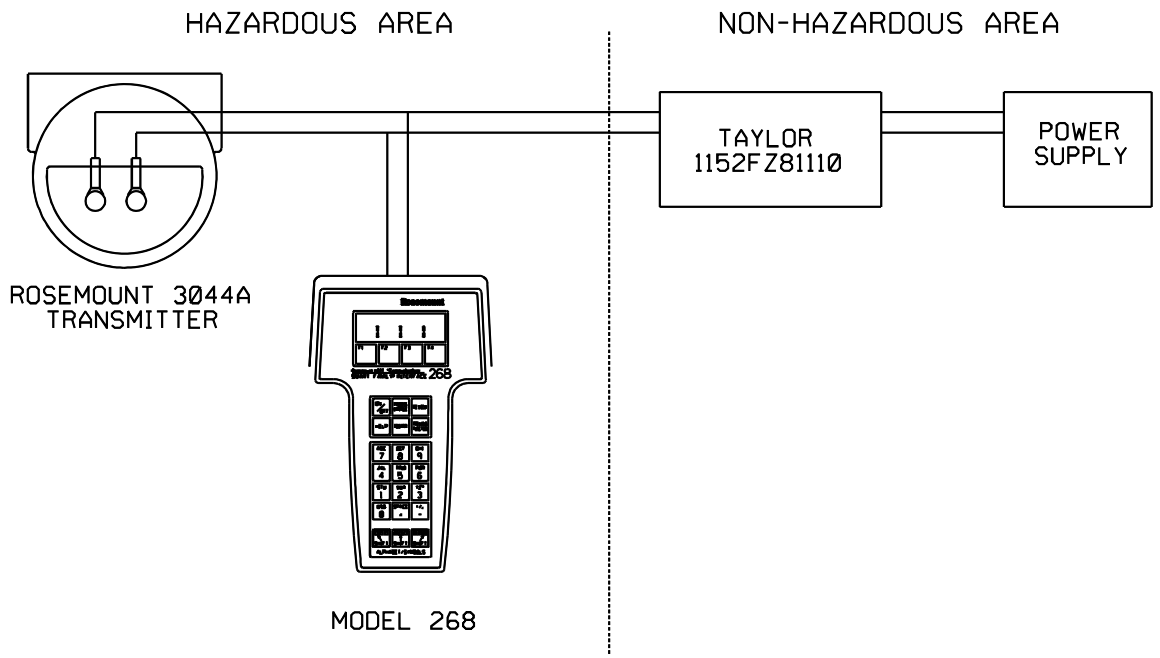

ROSEMOUNT 3044A SMART TRANSMITTERS MAY BE PLACED IN A CLASS I, DIVISION I, GROUP A, B, C, D HAZARDOUS LOCATION AS SHOWN ABOVE. THE LOOP POWER IS LIMITED BY A TAYLOR 1152FZ81110 INTRINSIC SAFETY BARRIER. THE ROSEMOUNT 268 MAY ALSO BE CONNECTED IN THE LOOP AS SHOWN. FOR CABLE WITH CAPACITANCE OF 60 pF/ft OR LESS AND INDUCTANCE OF .2 uH/ft OR LESS; CABLE LENGTHS OF UP TO 1600 FEET ARE ALLOWED.

TRANSMITTER: ROSEMOUNT 3044A
BARRIER: TAYLOR 1152FZ81110
COMMUNICATOR: ROSEMOUNT 268
CABLE: Cmax = 60 pF/ft
Lmax = .2 uH/ft
MAX. LENGTH = 1600 ft

Rosemount Inc. 12001 Technology Drive Eden Prairie, MN 55344 USA	THIS DRAWING WAS CREATED ON CAD. DRAWING IS ARCHIVED ON MAGNETIC TAPE FOR ECO CHANGES.		
DR. C. SCRIBNER 12/21/90	SIZE A	FSCM NO	DWG NO. 00268-0031
ISSUED	SCALE N/A	WT. ———	SHEET 6 OF 7

FORM NO. 60651A-1 REV. C

REVISIONS				
REV	DESCRIPTION	CHG. NO.	APP'D	DATE
M		653145		

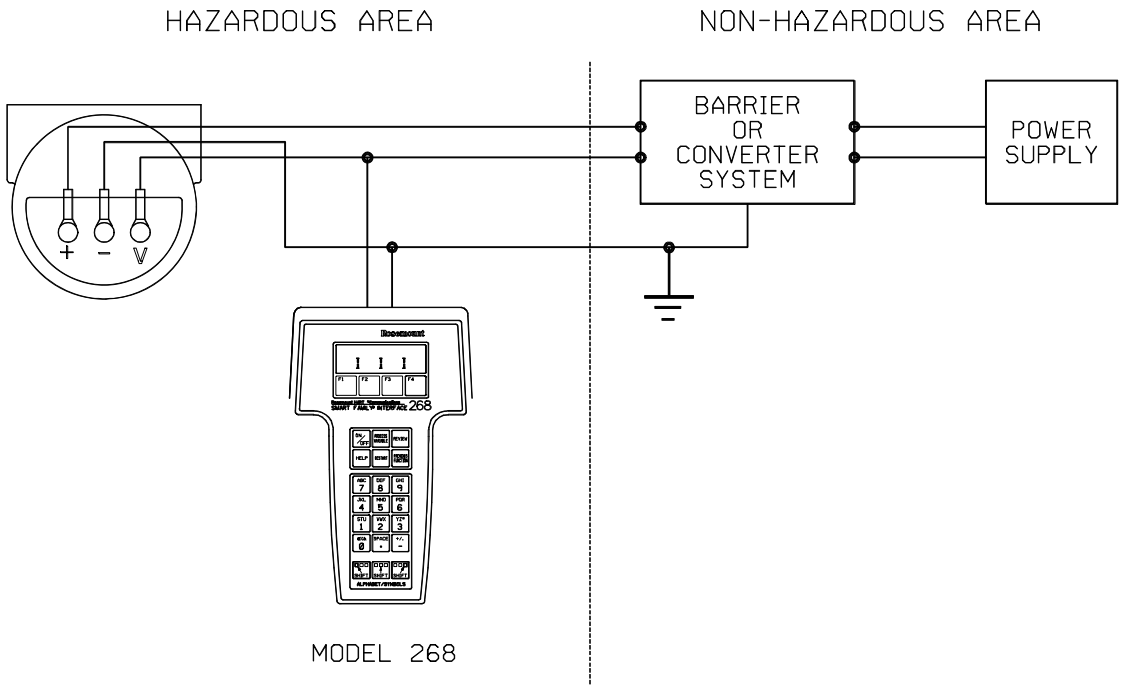

CONNECTION FOR LOW POWER VERSIONS
OF THE FOLLOWING
ROSEMOUNT SMART TRANSMITTERS

MODEL 3051C, 3051P, 3051L, 3051H, 3051CA
MODEL 3001C, 3001CL, 3001CH
MODEL 3001S, 3001SL, 3001SH

Rosemount Inc. 12001 Technology Drive Eden Prairie, MN 55344 USA	THIS DRAWING WAS CREATED ON CAD. DRAWING IS ARCHIVED ON MAGNETIC TAPE FOR ECO CHANGES.		
DR. SANDI MANSON 8/8/91	SIZE A	FSCM NO	DWG NO. 00268-0031
ISSUED	SCALE N/A	WT. ———	SHEET 7 OF 7

FORM NO. 60651A-1 REV. C

Figure B-4.

PROPRIETARY INFORMATION IS CONTAINED HEREIN AND MUST BE HANDLED ACCORDINGLY
BY _____ DATE _____

REVISIONS

REV	DESCRIPTION	CHG. NO.	APP'D	DATE
A	NEW RELEASE	654533	B.S.J.	8/30/93
B	CHG Vmax & C_1	657178	B.S.J.	12/13/93

THIS DRAWING WAS CREATED ON CAD. DRAWING IS ARCHIVED ON MAGNETIC TAPE FOR ECO CHANGES.

UNLESS OTHERWISE SPECIFIED DIMENSIONS IN INCHES. REMOVE ALL BURRS AND SHARP EDGES. MACHINE SURFACE FINISH 125

- TOLERANCES -

DECIMALS
.X±.1
.XX±.02
.XXX±.010

FRACTIONS
±1/32

ANGLES
±2°

DO NOT SCALE PRINT

CONTRACT NO.

DR. C.SCRIBNER 6/2/93

CHK'D

APP'D. B.S. JUNK 8/30/93

APP'D. GOVT.

ROSEMOUNT® Measurement Control Analytical Valves

Rosemount Inc.
12001 Technology Drive
Eden Prairie, MN 55344 USA

TITLE INDEX OF I.S. BARRIER SYSTEMS FOR MOD. 275 HART® COMMUNICATOR

SIZE A | FSCM NO | DWG NO. 00275-0081

SCALE | WT. _____ | SHEET 1 OF 6

REVISIONS				
REV	DESCRIPTION	CHG. NO.	APP'D	DATE
B		657178		

FM ENTITY CONCEPT APPROVALS

THE ENTITY CONCEPT ALLOWS INTERCONNECTION OF INTRINSICALLY SAFE APPARATUS TO ASSOCIATED APPRATUS NOT SPECIFICALLY EXAMINED IN COMBINATION AS A SYSTEM. THE APPROVED VALUES OF MAXIMUM OPEN CIRCUIT VOLTAGE (V_T OR V_{OC}) AND MAXIMUM SHORT CIRCUIT CURRENT (I_T OR I_{SC}) FOR THE ASSOCIATED APPARATUS MUST BE LESS THAN OR EQUAL TO THE MAXIMUM SAFE INPUT VOLTAGE (V_{MAX}) AND MAXIMUM SAFE INPUT CURRENT (I_{MAX}) OF THE INTRINSICALLY SAFE APPARATUS, IN ADDITION, THE APPROVED MAXIMUM ALLOWABLE CONNECTED CAPACITANCE (C_A) AND INDUCTANCE (L_A) OF THE ASSOCIATED APPARATUS MUST BE GREATER THAN THE MAXIMUM UNPROTECTED INTERNAL CAPACITANCE (C_I) AND INDUCTANCE (L_I) OF THE INTRINSICALLY SAFE APPARATUS. THE APPROVED ENTITY CONCEPT PARAMETERS ARE AS FOLLOWS:

NOTE: ENTITY PARAMETERS LISTED APPLY ONLY TO ASSOCIATED APPARATUS WITH LINEAR OUTPUT.

INPUT PARAMETERS (CLASS I, DIV. 1, GROUPS A, B, C, D)	
Vmax = 30 Vdc	V_T or Voc of barrier must be $\leq$ 30 Vdc
Imax = 300 mA	I_T or Isc of barrier must be $\leq$ 300 mA
C_I = 0.07μF	C_A of barrier must be $\geq$ 0.07 μF
L_I = 0 mH	L_A of barrier must be $\geq$ 0 mH

OUTPUT PARAMETERS
Voc = 1.7 Vd.c.
Isc = 32 mA

Rosemount Inc.
12001 Technology Drive
Eden Prairie, MN 55344 USA

THIS DRAWING WAS CREATED ON CAD. DRAWING IS ARCHIVED ON MAGNETIC TAPE FOR ECO CHANGES.

DR. C.SCRIBNER	SIZE A	FSCM NO	DWG NO. 00275-0081
ISSUED	SCALE N/A	WT. ———	SHEET 2 OF 6

REVISIONS				
REV	DESCRIPTION	CHG. NO.	APP'D	DATE
B		657178		

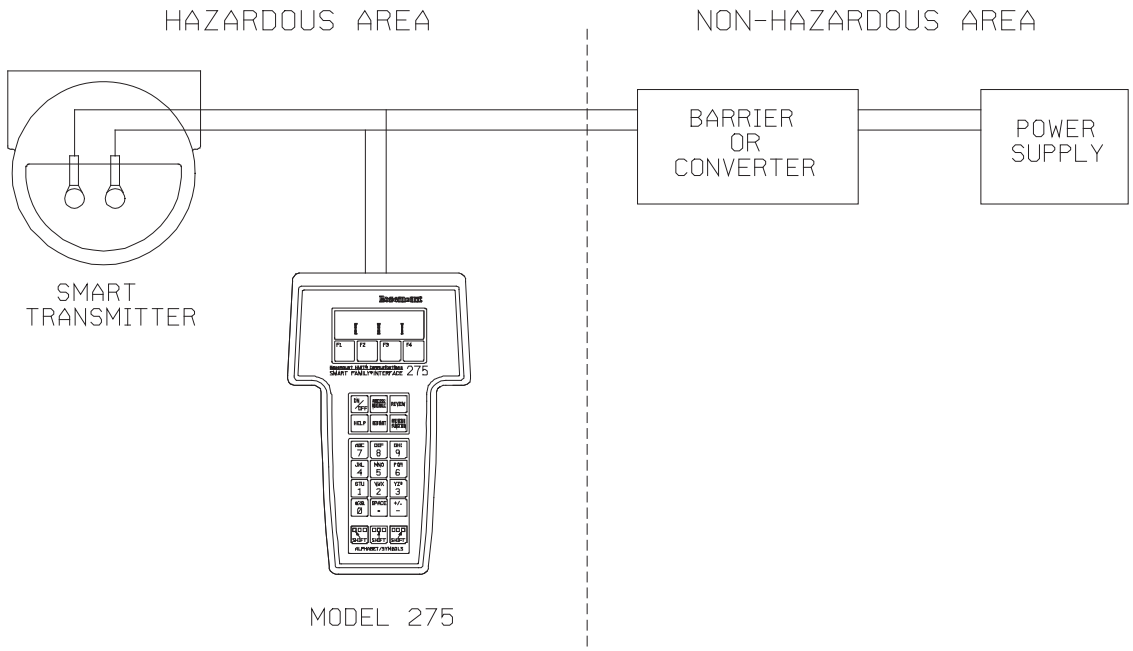

Rosemount Inc.
12001 Technology Drive
Eden Prairie, MN 55344 USA

THIS DRAWING WAS CREATED ON CAD. DRAWING IS ARCHIVED ON MAGNETIC TAPE FOR ECO CHANGES.

DR. C.SCRIBNER	SIZE A	FSCM NO	DWG NO. 00275-0081
ISSUED	SCALE N/A	WT. ———	SHEET 3 OF 6

REVISIONS				
REV	DESCRIPTION	CHG. NO.	APP'D	DATE
B		657178		

THE MAXIMUM ALLOWABLE CONNECTED INDUCTANCE (La) OF THE ASSOCIATED APPARATUS IS DETERMINED BY ADDING 32 mA TO THE Isc OF THE BARRIER (Im=Isc + 32mA) AND ENTERING TABLE 1 (SHT 5) AT THE RESULTING VALUE, Im, OR THE NEXT HIGHER VALUE OF Im, TO DETERMINE THE La.

EXAMPLE #1: Isc OF BARRIER = 100mA. (GROUP A)

Im = 100mA + 32mA = 132mA

ENTER TABLE AT Im = 140mA; La = 1.60mH

--WARNING-- BEFORE CONNECTING THE MODEL 275 INTO THE LOOP, DETERMINE THE CONNECTED INDUCTANCE OF THE SYSTEM BY ADDING THE L_1 OF THE TRANSMITTER AND CABLE. THE SUM MUST BE LESS THAN THE La DETERMINED FROM THE TABLE IN ORDER FOR THE MODEL 275 TO BE CONNECTED INTO THE LOOP. IF THE CONNECTED INDUCTANCE IS GREATER THAN THE VALUE DETERMINED FROM THE TABLE, A BARRIER WITH A LOWER Isc MUST BE CHOSEN.

EXAMPLE #2: BARRIER ISC = 41.8mA; BARRIER LA = 20.0mH

IM = 41.8mA + 32mA = 73.8mA;

ENTER TABLE AT 80mA AND READ La = 6.0mH

ADD CONNECTED INDUCTANCE OF SYSTEM:

MODEL 3051 TRANSMITTER	L_1 = 0.48mH
INDUCTANCE OF LOOP WIRING	1.0mH
TOTAL CONNECTED INDUCTANCE	= 1.48mH

TOTAL CONNECTED INDUCTANCE IS LESS THAN La = 6.0 mH AS DETERMINED ABOVE AND IS ALSO LESS THAN THE BARRIER La. THE MODEL 275 MAY SAFELY BE CONNECTED INTO THE LOOP. IF THE MODEL 751 INDICATORS ARE USED, THEIR TOTAL INDUCTANCE (LABEL VALUE * NUMBER OF INDICATORS) MUST ALSO BE INCLUDED.

Rosemount Inc.
12001 Technology Drive
Eden Prairie, MN 55344 USA

THIS DRAWING WAS CREATED ON CAD. DRAWING IS ARCHIVED ON MAGNETIC TAPE FOR ECO CHANGES.

DR. C.SCRIBNER 6/2/93	SIZE A	FSCM NO	DWG NO. 00275-0081
ISSUED	SCALE N/A	WT. ———	SHEET 4 OF 6

REVISIONS				
REV	DESCRIPTION	CHG. NO.	APP'D	DATE
B		657178		

Im	La (mH)		
(mA)	GROUPS A & B	GROUP C	GROUP D
300	0.20	1.80	3.20
280	0.21	2.00	3.70
270	0.23	2.20	3.90
260	0.25	2.50	4.30
250	0.27	2.70	4.60
240	0.30	3.00	5.00
220	0.40	3.20	5.90
200	0.50	4.00	7.20
180	0.60	5.00	8.80
170	0.80	5.50	9.90
160	1.00	6.20	11.20
150	1.30	7.00	12.70
140	1.60	8.00	14.60
130	2.00	9.00	16.90
120	2.50	10.00	19.80
110	3.00	12.00	23.60
100	4.00	15.00	28.50
90	5.00	18.00	35.10
85	5.50	20.00	39.30
80	6.00	22.00	44.40
75	6.70	25.00	50.50
70	7.50	28.00	57.90
65	8.80	34.00	67.10
62	9.50	37.00	73.70
60	10.00	40.00	78.70
57	11.00	43.00	87.10
55	12.00	48.00	93.50
50	15.00	56.00	113.10
45	19.00	70.00	139.40
40	23.00	87.00	176.30
35	31.00	110.00	229.90
32	36.00	135.00	274.80
30	40.00	150.00	312.40
28	46.00	170.00	358.40
25	58.00	210.00	449.00
23	68.00	250.00	530.10
21	82.00	300.00	635.30
20	90.00	330.00	700.00

TABLE 1

Rosemount Inc.
12001 Technology Drive
Eden Prairie, MN 55344 USA

THIS DRAWING WAS CREATED ON CAD. DRAWING IS ARCHIVED ON MAGNETIC TAPE FOR ECO CHANGES.

DR. C.SCRIBNER 6/2/93

ISSUED

SIZE A | FSCM NO | DWG NO. 00275-0081

SCALE N/A | WT. | SHEET 5 OF 6

REVISIONS				
REV	DESCRIPTION	CHG. NO.	APP'D	DATE
B		657178		

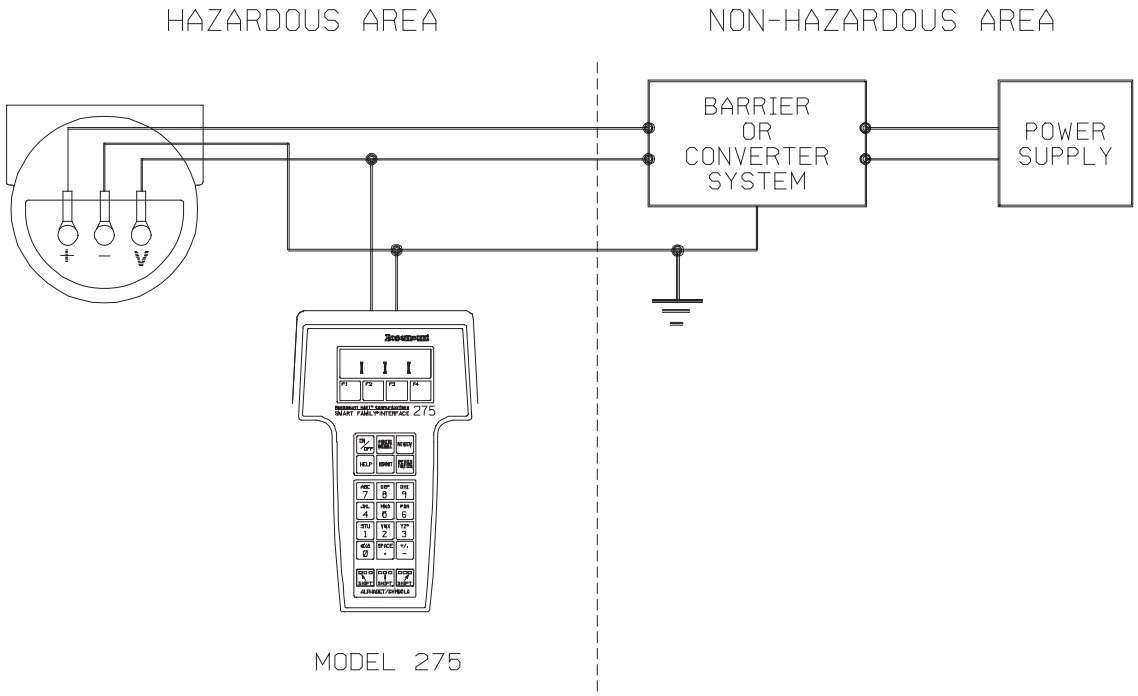

Rosemount Inc.
12001 Technology Drive
Eden Prairie, MN 55344 USA

THIS DRAWING WAS CREATED ON CAD. DRAWING IS ARCHIVED ON MAGNETIC TAPE FOR ECO CHANGES.

DR. C. SCRIBNER 6/2/93	SIZE A	FSCM NO	DWG NO. 00275-0081
ISSUED	SCALE N/A	WT. ———	SHEET 6 OF 6

Figure B-5.

PROPRIETARY INFORMATION IS CONTAINED HEREIN AND MUST BE HANDLED ACCORDINGLY
BY _____ DATE _____

REVISIONS				
REV	DESCRIPTION	CHG. NO.	APP'D	DATE
A	NEW RELEASE	654533		

CSA INTRINSIC SAFETY APPROVALS
MODEL 275 CIRCUIT CONNECTION WITH INTRINSIC SAFETY BARRIERS

"Exia"
INTRINSICALLY SAFE/SECURITE INTRINSEQUE

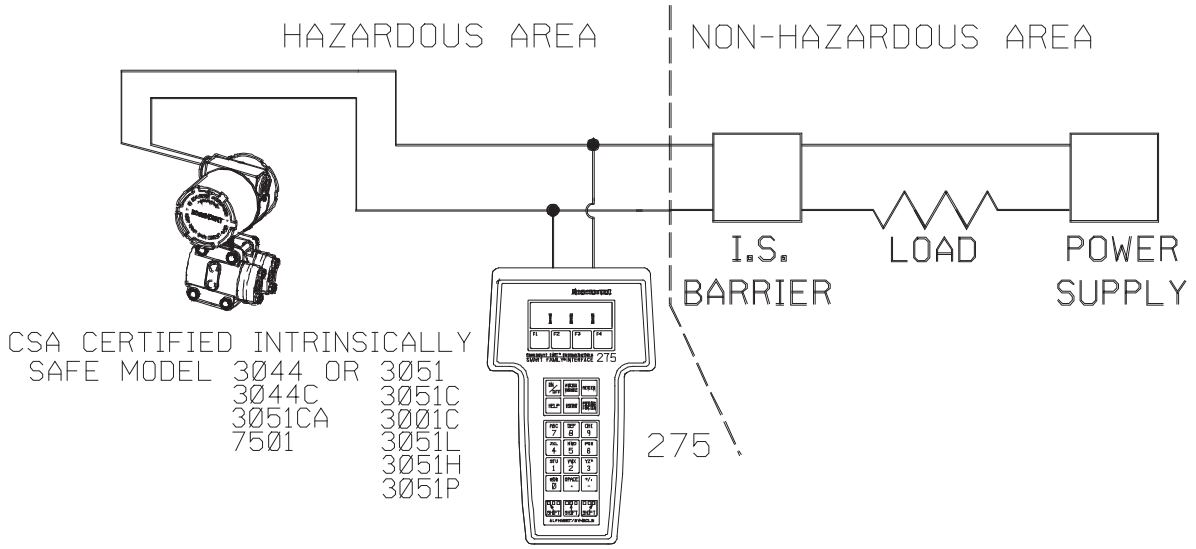

CSA CERTIFIED INTRINSICALLY SAFE MODEL 3044 OR 3051
3044C 3051C
3051CA 3001C
7501 3051L
3051H
3051P

INTRINSICALLY SAFE FOR USE IN CLASS 1, DIVISON 1, GROUPS A,B,C AND D HAZARDOUS LOCATIONS WHEN CONNECTED TO CSA CERTIFIED INTRINSIC SAFETY BARRIERS AS INDICATED IN THE ABOVE CONNECTION DIAGRAM. CERTIFIED INTRINSIC SAFETY BARRIERS ARE LISTED BELOW.

30V MAX, 330 OHMS MIN
28V MAX, 300 OHMS MIN
22V MAX, 180 OHMS MIN

THIS DRAWING WAS CREATED ON CAD. DRAWING IS ARCHIVED ON MAGNETIC TAPE FOR ECO CHANGES.

UNLESS OTHERWISE SPECIFIED DIMENSIONS IN INCHES. REMOVE ALL BURRS AND SHARP EDGES. MACHINE SURFACE FINISH 125
- TOLERANCES -
DECIMALS .X±.1 .XX±.02 .XXX±.010
FRACTIONS ±1/32
ANGLES ±2°
DO NOT SCALE PRINT

CONTRACT NO.
DR. C.SCRIBNER 6/2/93
CHK'D
APP'D.
APP'D. GOVT.

ROSEMOUNT® Measurement Control Analytical Valves
Rosemount Inc.
12001 Technology Drive
Eden Prairie, MN 55344 USA

TITLE
275 CSA INTRINSICALLY SAFE CONFIGURATION

SIZE	FSCM NO	DWG NO.
A		00275-0082

SCALE NONE WT. _____ SHEET 1 OF 1

Figure B-6.

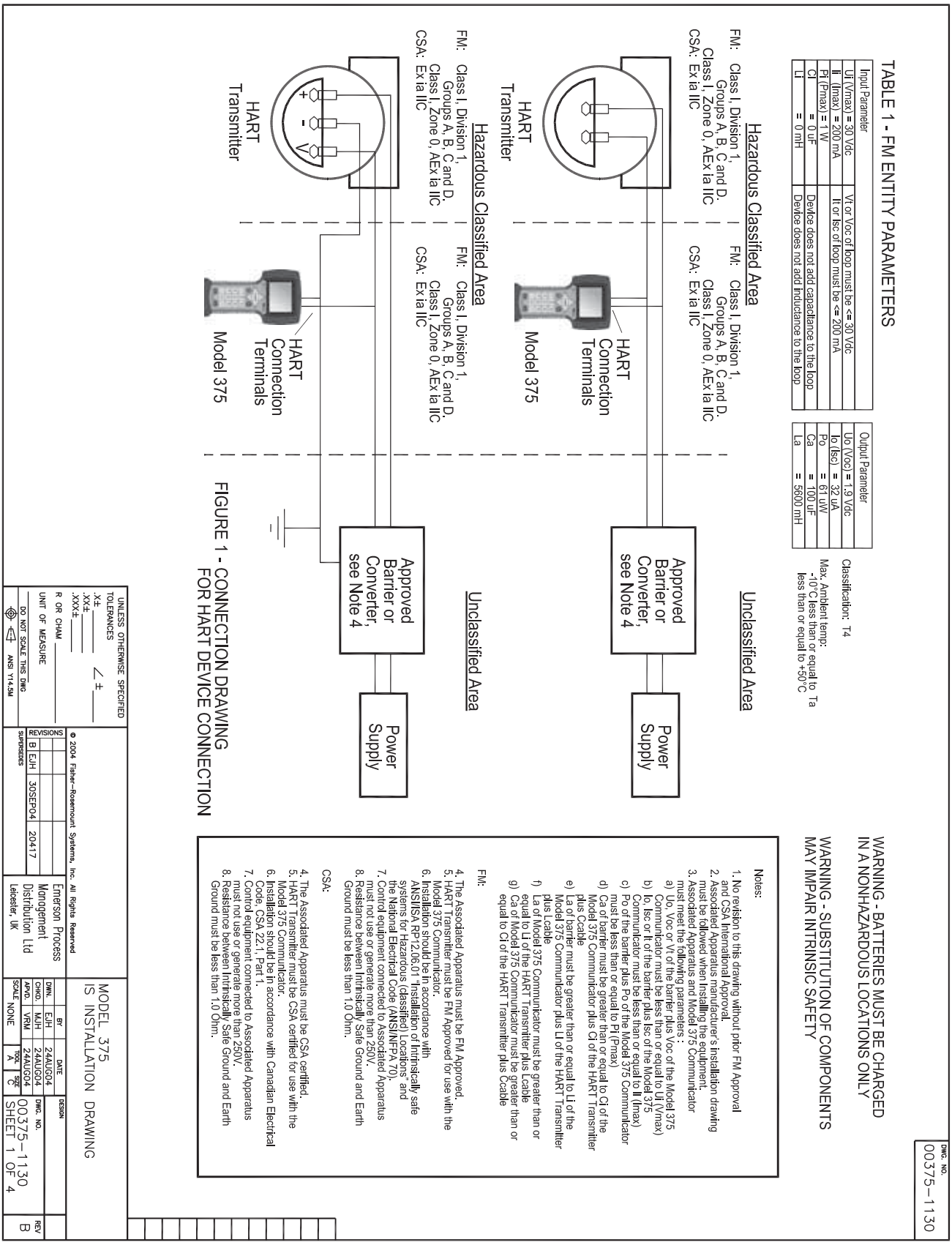
TABLE 1 - FM ENTITY PARAMETERS
Input Parameter
Ui (Vmax) = 30 Vdc
Ii (Imax) = 200 mA
Pi (Pmax) = 1 W
Ci = 0 uF
Li = 0 mH
Vt or Voc of loop must be <= 30 Vdc
It or Isc of loop must be <= 200 mA
Device does not add capacitance to the loop
Device does not add inductance to the loop
Output Parameter
Uo (Voc) = 1.9 Vdc
Io (Isc) = 32 uA
Po = 61 uW
Ca = 100 uF
La = 5600 mH
Classification: T4
Max. Ambient temp: -10°C less than or equal to Ta less than or equal to +50°C
Hazardous Classified Area
FM: Class I, Division 1, Groups A, B, C and D, Class I, Zone 0, AEx ia IIC
CSA: Ex ia IIC
HART Transmitter
HART Connection Terminals
Model 375
Unclassified Area
Approved Barrier or Converter, see Note 4
Power Supply
WARNING - BATTERIES MUST BE CHARGED IN A NONHAZARDOUS LOCATIONS ONLY
WARNING - SUBSTITUTION OF COMPONENTS MAY IMPAIR INTRINSIC SAFETY
Notes:
1. No revision to this drawing without prior FM Approval and CSA International Approval.
2. Associated Apparatus manufacturer's installation drawing must be followed when Installing the equipment.
3. Associated Apparatus and Model 375 Communicator must meet the following parameters :
a) Uo, Voc or Vt of the barrier plus Voc of the Model 375 Communicator must be less than or equal to Ui (Vmax)
b) Io, Isc or It of the barrier plus Isc of the Model 375 Communicator must be less than or equal to Ii (Imax)
c) Po of the barrier plus Po of the Model 375 Communicator must be less than or equal to Pi (Pmax)
d) Ca of barrier must be greater than or equal to Ci of the Model 375 Communicator plus Ci of the HART Transmitter plus Ccable
e) La of barrier must be greater than or equal to Li of the Model 375 Communicator plus Li of the HART Transmitter plus Lcable
f) La of Model 375 Communicator must be greater than or equal to Li of the HART Transmitter plus Lcable
g) Ca of Model 375 Communicator must be greater than or equal to Ci of the HART Transmitter plus Ccable
FM:
4. The Associated Apparatus must be FM Approved.
5. HART Transmitter must be FM Approved for use with the Model 375 Communicator.
6. Installation should be in accordance with ANSI/ISA RP12.06.01 "Installation of Intrinsically safe systems for Hazardous (classified) Locations" and the National Electrical Code (ANSI/NFPA 70).
7. Control equipment connected to Associated Apparatus must not use or generate more than 250V.
8. Resistance between Intrinsically Safe Ground and Earth Ground must be less than 1.0 Ohm.
CSA:
4. The Associated Apparatus must be CSA certified.
5. HART Transmitter must be CSA certified for use with the Model 375 Communicator.
6. Installation should be in accordance with Canadian Electrical Code, CSA 22.1 Part 1.
7. Control equipment connected to Associated Apparatus must not use or generate more than 250V.
8. Resistance between Intrinsically Safe Ground and Earth Ground must be less than 1.0 Ohm.
FIGURE 1 - CONNECTION DRAWING FOR HART DEVICE CONNECTION
UNLESS OTHERWISE SPECIFIED TOLERANCES
.X± .XX± .XXX± ∠ ±
R OR CHAM
UNIT OF MEASURE
DO NOT SCALE THIS DWG
ANSI Y14.5M
REVISIONS
B EJH 30SEP04 20417
SUPERSEDES
© 2004 Fisher-Rosemount Systems, Inc. All Rights Reserved
Emerson Process Management Distribution Ltd
Leicester, UK
MODEL 375 IS INSTALLATION DRAWING
DWN. EJH 24AUG04
CHKD. MJH 24AUG04
APVD. VRM 24AUG04
SCALE NONE
TOOL A
SIZE C
DESIGN
DWG. NO. 00375-1130
SHEET 1 OF 4
REV B
DWG. NO. 00375-1130

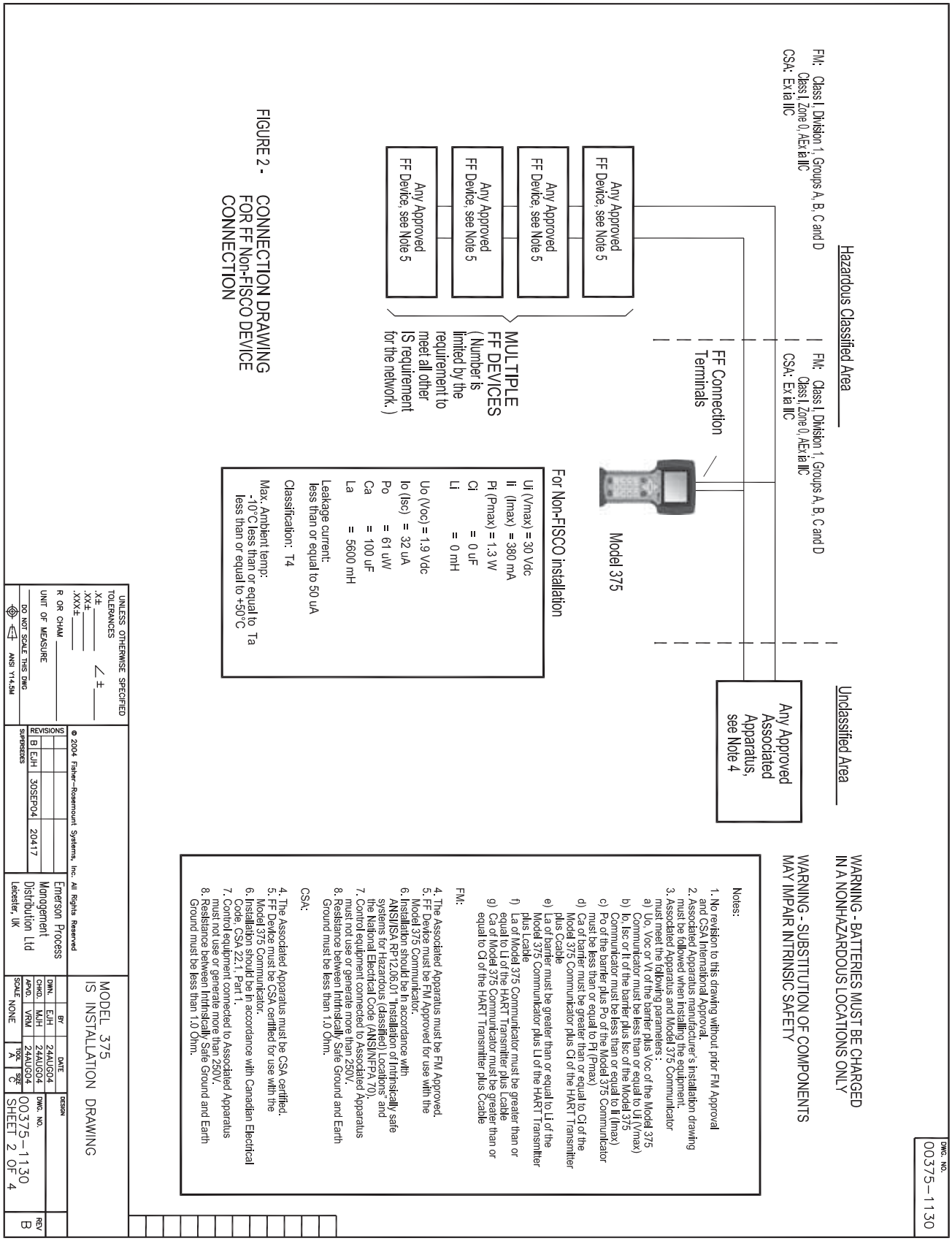
Hazardous Classified Area
FM: Class I, Division 1, Groups A, B, C and D
Class I, Zone 0, AEx ia IIC
CSA: Ex ia IIC
FM: Class I, Division 1, Groups A, B, C and D
Class I, Zone 0, AEx ia IIC
CSA: Ex ia IIC
Unclassified Area
Any Approved Associated Apparatus, see Note 4
FF Connection Terminals
Model 375
Any Approved FF Device, see Note 5
Any Approved FF Device, see Note 5
Any Approved FF Device, see Note 5
Any Approved FF Device, see Note 5
MULTIPLE FF DEVICES (Number is limited by the requirement to meet all other IS requirement for the network.)
For Non-FISCO installation
Ui (Vmax) = 30 Vdc
Ii (Imax) = 380 mA
Pi (Pmax) = 1.3 W
Ci = 0 uF
Li = 0 mH
Uo (Voc) = 1.9 Vdc
Io (Isc) = 32 uA
Po = 61 uW
Ca = 100 uF
La = 5600 mH
Leakage current:
less than or equal to 50 uA
Classification: T4
Max. Ambient temp:
-10°C less than or equal to Ta
less than or equal to +50°C
WARNING - BATTERIES MUST BE CHARGED IN A NONHAZARDOUS LOCATIONS ONLY
WARNING - SUBSTITUTION OF COMPONENTS MAY IMPAIR INTRINSIC SAFETY
Notes:
1. No revision to this drawing without prior FM Approval and CSA International Approval.
2. Associated Apparatus manufacturer's installation drawing must be followed when installing the equipment.
3. Associated Apparatus and Model 375 Communicator must meet the following parameters :
a) Uo, Voc or Vt of the barrier plus Voc of the Model 375 Communicator must be less than or equal to Ui (Vmax)
b) Io, Isc or It of the barrier plus Isc of the Model 375 Communicator must be less than or equal to Ii (Imax)
c) Po of the barrier plus Po of the Model 375 Communicator must be less than or equal to Pi (Pmax)
d) Ca of barrier must be greater than or equal to Ci of the Model 375 Communicator plus Ci of the HART Transmitter plus Ccable
e) La of barrier must be greater than or equal to Li of the Model 375 Communicator plus Li of the HART Transmitter plus Lcable
f) La of Model 375 Communicator must be greater than or equal to Li of the HART Transmitter plus Lcable
g) Ca of Model 375 Communicator must be greater than or equal to Ci of the HART Transmitter plus Ccable
FM:
4. The Associated Apparatus must be FM Approved.
5. FF Device must be FM Approved for use with the Model 375 Communicator.
6. Installation should be in accordance with ANSI/ISA RP12.06.01 "Installation of Intrinsically safe systems for Hazardous (classified) Locations" and the National Electrical Code (ANSI/NFPA 70).
7. Control equipment connected to Associated Apparatus must not use or generate more than 250V.
8. Resistance between Intrinsically Safe Ground and Earth Ground must be less than 1.0 Ohm.
CSA:
4. The Associated Apparatus must be CSA certified.
5. FF Device must be CSA certified for use with the Model 375 Communicator.
6. Installation should be in accordance with Canadian Electrical Code, CSA 22.1, Part 1.
7. Control equipment connected to Associated Apparatus must not use or generate more than 250V.
8. Resistance between Intrinsically Safe Ground and Earth Ground must be less than 1.0 Ohm.
FIGURE 2 - CONNECTION DRAWING FOR FF Non-FISCO DEVICE CONNECTION
DWG. NO. 00375-1130
UNLESS OTHERWISE SPECIFIED
TOLERANCES
X± ___
XX± ___
XXX± ___
∠ ± ___
R OR CHAM ___
UNIT OF MEASURE ___
DO NOT SCALE THIS DWG
ANSI Y14.5M
REVISIONS
B EJH 30SEP04 20417
SUPERSEDES
© 2004 Fisher-Rosemount Systems, Inc. All Rights Reserved
Emerson Process Management
Distribution Ltd
Leicester, UK
MODEL 375
IS INSTALLATION DRAWING
BY DATE
DWN. EJH 24AUG04
CHKD. MJH 24AUG04
APVD. VRM 24AUG04
SCALE NONE
TOL A
SIZE C
DESIGN
DWG. NO. 00375-1130
SHEET 2 OF 4
REV B

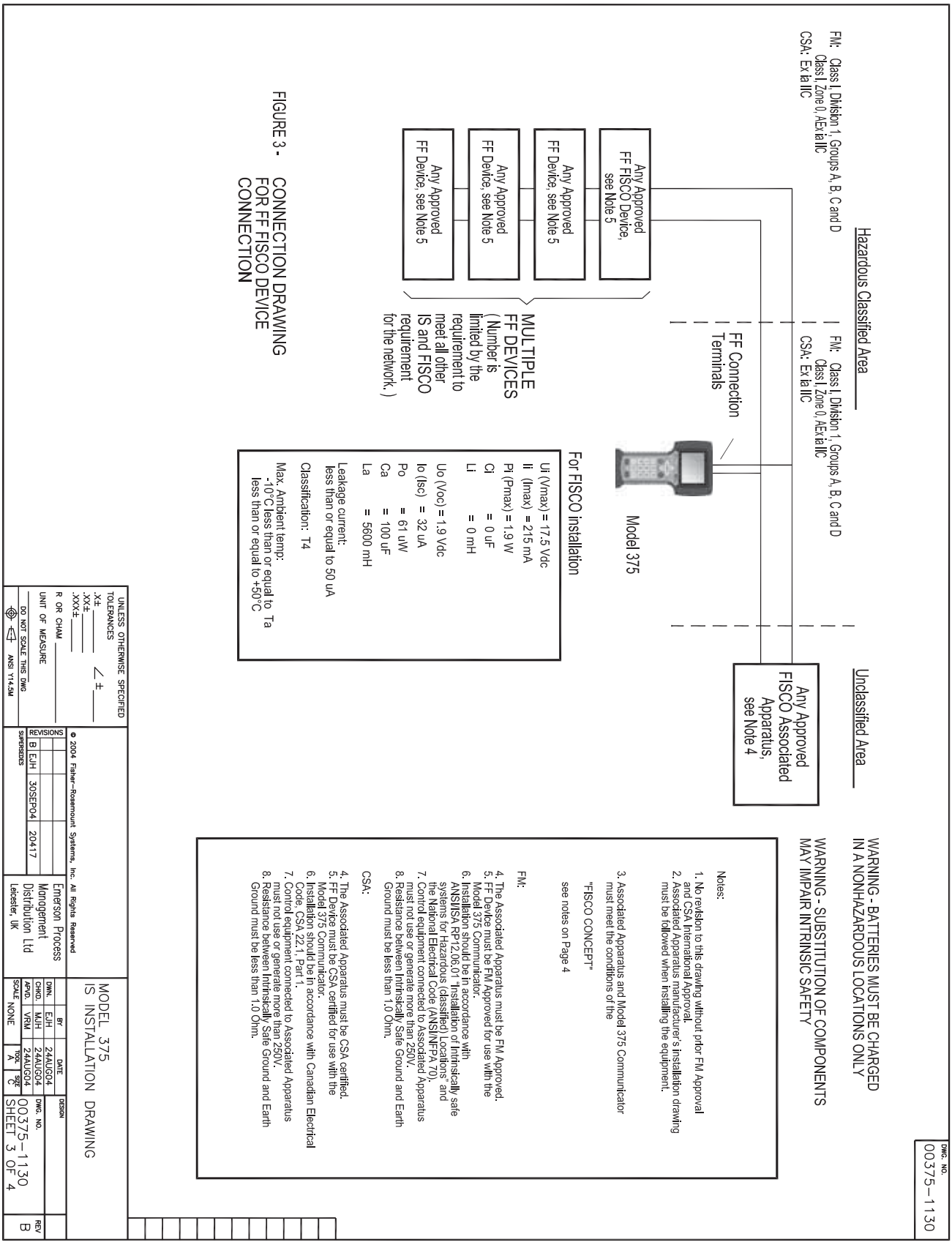

FIGURE 3 - CONNECTION DRAWING FOR FF FISCO DEVICE CONNECTION

DWG. NO. 00375–1130

FISCO CONCEPT

THE FISCO CONCEPT ALLOWS INTERCONNECTION OF INTRINSICALLY SAFE APPARATUS TO ASSOCIATED APPARATUS NOT SPECIALLY EXAMINED IN SUCH COMBINATION. THE CRITERIA FOR INTERCONNECTION IS THAT THE VOLTAGE (Ui OR Vmax), THE CURRENT (Ii OR Imax) AND THE POWER (Pi OR Pmax) WHICH AN INTRINSICALLY SAFE APPARATUS CAN RECEIVE AND REMAIN INTRINSICALLY SAFE CONSIDERING FAULTS, MUST BE EQUAL OR GREATER THAN VOLTAGE (Uo, Voc OR Vt), THE CURRENT (Io, Isc OR It) AND THE POWER (Po OR Pmax) LEVELS WHICH CAN BE DELIVERED BY THE ASSOCIATED APPARATUS, CONSIDERING FAULTS AND APPLICABLE FACTORS. IN ADDITION, THE MAXIMUM UNPROTECTED CAPACITANCE (Ci) AND THE INDUCTANCE (Li) OF EACH APPARATUS (OTHER THAN THE TERMINATION) CONNECTED TO THE FIELDBUS MUST BE LESS THAN OR EQUAL TO 5 nF and 10 uH RESPECTIVELY.

IN EACH SEGMENT ONLY ONE ACTIVE DEVICE, NORMALLY THE ASSOCIATED APPARATUS, IS ALLOWED TO PROVIDE THE NECESSARY ENERGY FOR THE FIELDBUS SYSTEM. THE VOLTAGE Uo (OR Voc OR Vt) OF THE ASSOCIATED APPARATUS IS LIMITED TO A RANGE OF 14 V TO 24 Vdc ALL OTHER EQUIPMENT CONNECTED TO THE BUS CABLE HAS TO BE PASSIVE, MEANING THAT THEY ARE NOT ALLOWED TO PROVIDE ENERGY TO THE SYSTEM, EXCEPT A LEAKAGE CURRENT OF 50uA FOR EACH CONNECTED DEVICE. SEPARATELY POWERED EQUIPMENT NEEDS GALVANIC ISOLATION TO ASSURE THAT THE INTRINSICALLY SAFE FIELDBUS CIRCUIT REMAINS PASSIVE.

THE CABLE USED TO INTERCONNECT DEVICES NEEDS TO HAVE THE PARAMETERS IN THE FOLLOWING RANGE:

Loop Resistance R:	15.....150 Ohm/km
Inductance per unit length L:	0.4.....1 mH/km
Capacitance per unit length C:	80.....200 nF

C = C line/line + 0.5C line/screen, if both lines are floating, or
C = C line/line + C line/screen, if the screen is connected to one line

Length of trunk cable:	less than or equal to 1000m
Length of spur cable:	less than or equal to 30m
Length of spur splice:	less than or equal to 1m

AT EACH END OF THE TRUNK CABLE AN APPROVED INFALLIBLE LINE TERMINATION WITH THE FOLLOWING PARAMETERS IS SUITABLE:

R = 90.....100 Ohm C = 0.....2.2 uF

ONE OF THE ALLOWED TERMINATIONS MIGHT ALREADY BE INTEGRATED IN THE ASSOCIATED APPARATUS. THE NUMBER OF PASSIVE APPARATUS CONNECTED TO THE BUS SEGMENT IS NOT LIMITED DUE TO I.S. REASONS. IF THE ABOVE RULES ARE RESPECTED, UP TO A TOTAL LENGTH OF 1000 m (SUM OF TRUNK AND ALL SPUR CABLES) OF CABLE IS PERMITED. THE INDUCTANCE AND THE CAPACITANCE OF THE CABLE WILL NOT IMPAIR THE INTRINSIC SAFETY OF THE INSTALLATION.

UNLESS OTHERWISE SPECIFIED TOLERANCES
.X± _____ ∠ ±_____
.XX± _____
.XXX± _____
R OR CHAM _____
UNIT OF MEASURE
DO NOT SCALE THIS DWG
ANSI Y14.5M

© 2004 Fisher–Rosemount Systems, Inc. All Rights Reserved

REVISIONS				
B	EJH	30SEP04	20417	

SUPERSEDES

Emerson Process Management Distribution Ltd Leicester, UK

MODEL 375
IS INSTALLATION DRAWING

	BY	DATE
DWN.	EJH	24AUG04
CHKD.	MJH	24AUG04
APVD.	VRM	24AUG04

DESIGN

DWG. NO. 00375–1130 SHEET 4 OF 4

REV B

SCALE NONE TOOL A SIZE C

Appendix C Glossary

Some of the terms used in this manual relate specifically to the operation of Rosemount transmitters, hand-held communicators, and other Rosemount products. The following list provides brief definitions.
See the sections listed for additional information.

Analog Output Trim
Digital trim operation that allows adjustment of the output electronics to conform to the plant standard of current. Three types of analog output trim are available: 4–20 mA output trim, 4–20 mA other scale, and low power.

Cloning
Off-line operation that uses a HART-based communicator to copy configuration data from one transmitter to one or more other transmitters that require the same data.

Commissioning
Functions performed with the HART-based communicator and the transmitter that test the transmitter and test the loop, and verify transmitter configuration data.

Configuration
Process of setting parameters that determine how the transmitter operates.

Damping
Output function that increases the response time of the transmitter to smooth the output when there are rapid input variations.

Descriptor
Sixteen-character field for additional identification of the transmitter, its use, or location. The descriptor is stored in the transmitter and can be changed using the HART-based communicator.

Digital Trim
Format function that allows you to adjust the transmitter characterization for purposes of digital calibration to plant standards. Digital trim includes two separate operations: sensor trim and analog output trim.

Failure Mode Alarm
Transmitter function that drives the analog output to a jumper-selectable high or low value in the event of an electronics failure.

Factory Characterization
Factory process during which each sensor module is subjected to pressures and temperatures covering the full operating range.
The sensor module memory stores data generated from this process for use by the microprocessor in correcting the transmitter output during operation.

HART (Highway Addressable Remote Transducer) Protocol
Communications standard that provides simultaneous analog and digital signal transmission between control rooms and field devices such as transmitters. All Rosemount SMART FAMILY products communicate using the HART protocol.

Lower Range Limit (LRL) Lowest value of the measured variable that the transmitter can be configured to measure.

Lower Range Value (LRV) Lowest value of the measured variable that the analog output of the transmitter is currently configured to measure.

Multidropping The connection of several transmitters to a single communications transmission line. Communication between the host and the transmitters takes place digitally with the analog output of the transmitters deactivated.

Reranging Configuration function that changes the transmitter 4 and 20 mA settings.

Send Data HART-based communicator command that transfers configuration data from the hand-held communicator's memory to the transmitter memory.

Sensor Trim Sensor trim function in which two accurate, end-point pressures are applied and all output is linearized between them. The selected end points should always be equal to or outside the LRV and URV. This is also known as a Full Trim.

Smart Term used to describe instruments that are microprocessor-based and feature advanced communications capabilities.

SMART FAMILY Rosemount pressure, temperature, level, and flow instruments with microprocessor-based digital electronics.

Span Algebraic difference between the upper and lower range values.

Tag Eight-character field for identifying the transmitter. The tag is stored in the transmitter and can be changed using the HART Communicator and the transmitter information function.

Transmitter Address Unique number (1-15) used to identify a multidropped transmitter. Transmitters that are not multidropped have 0 as an address.

Transmitter Security Jumper-selectable feature that prevents accidental or deliberate changes to configuration data.

Upper Range Limit (URL) Highest value of the measured variable that the transmitter can be configured to measure.

Upper Range Value (URV) Highest value of the measured variable that the analog output of the transmitter is currently configured to measure.

Zero Trim A zero-based, one-point adjustment used in differential pressure applications to compensate for mounting position effects or zero shifts caused by static pressure.

Index

A
Access Requirements
Circuit Side of Electronics Housing 2-5
Exterior of Electronics Housing 2-5
Process Flange Orientation 2-4
Terminal Side of Electronics Housing 2-4
Adjustment
Damping Adjustment . . . 4-15
Linearity Adjustment . . . 4-15
Amplifier Board Standoffs 6-5
Analog Electronics (Figure 12-1) 6-3
Analog Electronics Assembly . 6-2

B
Backup Ring Installation 5-16
Board Spacers 6-10
Brackets
Mounting Options 2-11
Bubbler Liquid Level Measurement 2-20
Bubbler System in Open Vessel 2-20
Liquid Level Measurement 2-20

C
Calibrate the Sensor 3-12
Calibration
Damping Adjustment . . . 4-15
Data Flow 4-11
Elevated or Suppressed Zeros 4-14
Linearity Adjustment . . . 4-15
Span Adjustment Range 4-11
Static Pressure Span Correction Factor 4-16
Zero Adjustment Range . 4-11
Zero and Span Adjustment 4-13
Characterization
Before Characterizing the Transmitter . . . 6-13
Characterizing with a Model 275 Communicator . 6-14
Circuit Side of Electronics Housing 2-5
Closed Vessels
Dry Leg Condition 2-18
Liquid Level Measurement 2-17
Wet Leg Condition 2-18
Commissioning the 1151 with a HART-Based Communicator . . 3-3
Commissioning the Transmitter on the Bench 3-1
Configuration
LCD Meter 2-21
Connecting the Electrical Housing to the Sensor 5-16
Connections
Electrical Housing to the Sensor 5-7
Header Board (Figure 9-4) 5-9

D
Damping Adjustment 4-15
Data Flow with Calibration Options 4-11
Digital Trim (Analog Output Trim and Sensor Trim) 4-4
Disassembly
Transmitter Disassembly 5-12
Drain/Vent Valves 2-8
Dry Leg Condition
Liquid Level Measurement 2-18

E
Electrical Housing 5-6, 5-7
Electrical Installation Considerations 2-13
Grounding 2-14
Power Supply 2-13
Signal and Test Terminals 2-14
Wiring 2-14
Elevated or Suppressed Zeros 4-14
Elevation and Suppression Jumper Settings 4-13
Environmental Considerations 2-17
Environmental Requirements
Mounting Requirements . . 2-8
Exterior of Electronics Housing 2-5

F
Filter Terminal Blocks
Installation 2-25

G
Gas
Mounting Requirements . . 2-8
Grounding 2-14
Effects on Accuracy for Fast Sample Computers 2-16
Transmitter Case 2-15

H
Hazardous Locations 2-17
Header Board Connections (Figure 9-4)
Housing
Electrical 5-6, 5-7
Connecting Sensor . . 5-7
Sensor Removal 5-6
Electronic
Circuit Side 2-5
Exterior 2-5
Terminal Side 2-4
Rotation 2-4

I
Impulse Piping 2-9
Installation Diagrams 2-9
Installation 2-25
Board Spacers 6-10
Electrical Considerations . 2-13
Environmental Considerations . 2-17
General Considerations . . 2-4
Hazardous Locations . . . 2-17
Mounting Bracket Options 2-11
Mounting Considerations 2-11
Power Supply Load Limitations 2-13
Process Considerations . 2-10
Signal Wiring Grounding . 2-15
Smart Retrofit Kit 6-10
Installation Diagrams
Impulse Piping 2-9
Integral Span and Zero Buttons 3-9, 3-10
Introduction 1-1

L
LCD Meter 2-21
Assembly 2-23
Configuration 2-21
Linearity Adjustment 4-15
Liquid
Mounting Requirements . . 2-8
Liquid Level Measurement
Bubbler System in Open Vessel . . . 2-20
Closed Vessels 2-17
Dry Leg Condition 2-18
Open Vessels 2-17
Wet Leg Condition 2-18

M
Maintenance
Reassembly Procedure . . . 5-7
Sensor Module Checkout . 5-9
Troubleshooting Symptoms and Corrective Action (Table 9-2) 5-3

Maintenance and Troubleshooting
Reassembly Procedure . 5-15
Return of Material 5-18
Transmitter Disassembly 5-12
Manual
Use of 1-1
Menu Tree 3-5
Meters
Optional Plug-in Meters . 5-18
Model 1151 Analog Electronics
(Figure 12-1) 6-3
Mounting Bracket Options
(Figure 4-2) 2-11
Mounting Considerations . . . 2-11
Mounting Requirements 2-8
Drain/Vent Valves 2-8
Impulse Piping 2-9
Taps 2-8

O
On-line Configuration
Transmitter Security 3-2
Open Vessels
Liquid Level Measurement 2-17
Optional Plug-in Meter 5-9
Optional Plug-in Meters 5-18
Options
LCD Meter 2-21
O-ring Installation 5-16

P
Piping
Impulse Piping 2-9
Power Supply 2-13
Load Limitations 2-13
Preliminary Precaution 5-15
Process Considerations 2-10
Process Flange Orientation . . . 2-4
Process Sensor Body . . . 5-6, 5-7
Process Sensor Body Removal 5-13
Sensor Module Checkout 5-14

Q
Quick Calibration
Transmitter Data Flow . . 4-11

R
Rangeability A-3
Reassembly Procedure 5-7, 5-15
Backup Ring and O-ring
Installation 5-16
Connecting the Electrical Housing
to the Sensor 5-7, 5-16
Electrical Housing 5-7
Optional Plug-in Meter . . . 5-9
Optional Plug-in Meters . 5-18
Preliminary Precaution . . 5-15
Process Sensor Body . . . 5-7
Removing Power 6-3
Removing the Amplifier Board
Standoffs 6-5
Removing the Analog Electronics
Assembly 6-2
Removing the Sensor from the
Electrical Housing 5-6, 5-14
Reranging the Transmitter
Using the Integral Span and Zero
Buttons . . .3-9, 3-10
Retrofit Kit 6-10
Retrofitting the Model 1151 Transmitter
Installing the Board Spacers 6-10
Installing the Smart
Retrofit Kit 6-10
Model 1151 Analog Electronics
(Figure 12-1) . . . 6-3
Removing Power 6-3
Removing the Analog Electronics
Assembly 6-2
Return of Material 5-18
Rotating Housing 2-4

S
Sensor
Connecting to the Electrical
Housing 5-7
Removal from Electrical
Housing 5-6
Sensor Body Removal . . 5-13
Sensor Module Checkout 5-14
Sensor Removal 5-14
Sensor Module Checkout 5-9
Header Board Connections
(Figure 9-4) 5-9
Sensor Trim 4-4
Setting Output Units 4-2
Setting the Loop to Manual . . . 3-7
Signal Terminals 2-14
Signal Wiring Grounding . . . 2-15
Smart Retrofit Kit 6-10
Span Adjustment Range . . . 4-11
Specifications and Reference Data
Model 1151 Transmitter Range
Availability A-3
Rangeability (Table 10-1) . A-3
Startup
Testing Equipment and Loop 3-6
Static Pressure Span Correction
Factor 4-16
Steam
Mounting Requirements . . 2-8
Suppressed Zeros
Elevated Zeros 4-14
Systematic Error Correction . 5-10

T
Taps 2-8
Terminal Side of Electronics
Housing 2-4
Terminals 2-14
Signal 2-14
Test 2-14
Test Terminals 2-14
Transient Protection
Installation 2-25
Transmitter
Data Flow 4-11
Disassembly 5-12
Electrical Housing . . .5-6
Process Sensor Body .5-6
Removing the Sensor from the
Electrical
Housing 5-6
Exploded View 5-13
Range Availability (1151) A-3
Security 3-2
Transmitter Case 2-15
Transmitter Disassembly
Process Sensor
Body Removal .5-13
Removing the Sensor from the
Electrical Housing 5-14
Sensor Module Checkout 5-14
Transmitter Reassembly 5-15
Backup Ring and O-ring
Installation 5-16
Connecting the Electrical Housing
to the Sensor . .5-16
Optional Plug-in Meters .5-18
Preliminary Precaution . .5-15
Troubleshooting Symptoms and
Corrective Action (Table 9-2) . .5-3

V
Vent/Drain Valves 2-8
Vessels
Open/Closed 2-17

W
Wet Leg Condition
Example (Figure 4-6) . . .2-19
Liquid Level Measurement 2-18
Wiring 2-14
Signal Terminals 2-14
Test Terminals 2-14

Z
Zero Adjustment Range 4-11
Elevation and Suppression Jumper
Settings 4-13
Zero and Integral Span
Buttons 3-9, 3-10
Zero and Span Adjustment . .4-13

Standard Terms and Conditions of Sale can be found at www.rosemount.com\terms_of_sale
The Emerson logo is a trademark and service mark of Emerson Electric Co.
Rosemount, Annubar, ProPlate, and the Rosemount logotype are registered trademarks of Rosemount Inc.
HART is a registered trademark of the HART Communication Foundation. δ-Cell is a trademark of Rosemount Inc.
Fluorolube is a registered trademark of Hooker Chemical Co.
Viton is a registered trademark of E.I. du Pont de Nemours & Co.
Neobee M-20 is a registered trademark of Stepan Chemical Co.
Syltherm and D.C. are registered trademarks of Dow Corning Corp.
Aflas is a registered trademark of Asahi Glass Co., Ltd.
Kynar is a trademark of Pennwalt Inc.
Loctite is a registered trademark of Loctite Corporation.

All other marks are the property of their respective owners.

Emerson Process Management

Rosemount Inc.
8200 Market Boulevard
Chanhassen, MN 55317 USA
T (U.S.) 1 800 999 9307
T (International) (952) 906 8888
F (952) 949 7001
www.rosemount.com

Emerson Process Management GmbH & Co.
Argelsrieder Feld 3
82234 Wessling
Germany
Tel 49 (8153) 9390
Fax 49 (8153) 939172

Emerson Process Management Asia Pacific Private Limited
1 Pandan Crescent
Singapore 128461
T (65) 6777 8211
F (65) 6777 0947
Enquiries@AP.EmersonProcess.com

Beijing Rosemount Far East Instrument Co., Limited
No. 6 North Street,
Hepingli, Dong Cheng District
Beijing 100013, China
T (86) (10) 6428 2233
F (86) (10) 6422 8586

© 2008 Rosemount Inc. All rights reserved.

EMERSON
Process Management

CALGON

CALGON CARBON CORPORATION

Specification No. VS23

For

Vessel Lining Application Specification Using Carboline / Plasite 4006 Vinyl Ester For Immersion Service

TABLE OF CONTENTS

1. QUALITY REQUIREMENTS 1
2. SCOPE OF WORK 2
3. REFERENCE DOCUMENTS 2
4. SERVICE CONDITIONS 5
5. MATERIALS 6
6. DELIVERY, STORAGE AND HANDLING 6
7. APPLICATION 7
8. INSPECTION AND TESTING 13
9. SPECIAL REQUIREMENTS FOR NSF-61 (WHEN SPECIFIED) 15
10. APPENDIX A-INSPECTION PROCEDURE 17
11. APPENDIX B- PLASITE 4006 PRODUCT DATA 33

PROPRIETARY AND CONFIDENTIAL
This document and design details are the property of Calgon Carbon Corporation and are not to be reproduced in whole or part, not employed for any purpose other than specifically permitted in writing by Calgon Carbon Corporation. This document is loaned and subject to return on demand.

1. QUALITY REQUIREMENTS

1.1. Calgon Carbon Corporation relies on the joint effort between supplier and buyer to emphasize conformance to specification. If conflict exists between this specification, drawings, purchase orders, data sheets or appendix documents, it is the responsibility of the supplier to bring such conflict to the attention of Calgon Carbon Corporation for resolution.

1.2. All vendors are expected to supply products and services with zero defects. Vendors are encouraged to use error prevention processes in their manufacturing procedures to obtain this goal. Calgon Carbon Corporation prefers to address quality issues prior to, and during the lining process rather than at the end. Where the vendor does not fully meet the requirements of this specification, implementation of a corrective action plan to address any deficiencies will be required in writing and subject to Calgon Carbon Corporation approval.

1.3. The vendor agrees to retain objective evidence, including written records of the inspections, measurements and tests performed in the course of blasting, lining, testing, and inspecting. These records shall be made available to the Calgon Carbon Corporation's Quality Inspector for review upon request. Calgon Carbon Corporation may at its discretion use a third party quality inspector for auditing purposes. The vendor's quality department will be notified if this is the course of inspection. Calgon Carbon Corporation requires third party inspectors to perform inspections using the coating manufacture's standards, calibrations and methodologies. All inspectors are to identify themselves at the vendor's facility, inform the vendor of the purpose and scope of the inspection and to conduct themselves in a professional non-confrontational manner.

1.4. The vendor shall submit their corporate QA/QC program, QC personnel with contact info and responsibilities. Inspection, testing procedures and documents are to be submitted to Calgon Carbon Corporation for approval. Please send to the attention of Quality Inspector, Equipment and Assembly Plant, at 4301 Grand Ave, Neville Island, PA 15225.

1.5. In the event of failure of the lining to withstand the service conditions set forth in Article 4.0, of this specification, the Vendor shall, at his expense, replace the

PROPRIETARY AND CONFIDENTIAL
This document and design details are the property of Calgon Carbon Corporation and are not to be reproduced in whole or part, not employed for any purpose other than specifically permitted in writing by Calgon Carbon Corporation. This document is loaned and subject to return on demand.

defective materials and workmanship to Calgon Carbon Corporation's satisfaction.

2. SCOPE OF WORK

2.1. This specification covers materials, surface preparation, application and testing of protective coatings for internal lining of carbon steel vessels.

2.2. The scope of work includes all labor, materials, equipment and services required for surface preparation, lining and testing the vessels indicated on the drawings.

2.3. The entire internal surface of the designated vessels including all nozzles and man ways shall be lined.

2.4. The lining must completely protect the internal metal surfaces from corrosion.

3. REFERENCE DOCUMENTS

3.1. Carboline Plasite 4006 Technical Bulletin, Carboline Company's most current version.

3.2. When needed use Carboline Plasite PA-3 Specification.

3.3. SSPC, "Pictorial Surface Preparation Standards."

3.4. SSPC, "Profile Comparative Panels."

3.5. NACE Publication RP0288-94, "Recommended Practices for Inspection of Linings on Steel and Concrete."

3.6. NACE Publication 6F-166, "Recommended Practices for Inspection of Linings on Steel and Concrete."

PROPRIETARY AND CONFIDENTIAL
This document and design details are the property of Calgon Carbon Corporation and are not to be reproduced in whole or part, not employed for any purpose other than specifically permitted in writing by Calgon Carbon Corporation. This document is loaned and subject to return on demand.

3.7. D.M. Berger and S.E. Mrox, "Instruments for Inspection of Coatings," ASTM, Journal of Testing & Evaluation, Vol. 4, No.1, 1969.

3.8. NACE Publication 6J-162, "Guide to the Preparation of Contracts and Specifications for the Application of Protective Coatings."

3.9. NACE Standard RP-01-78, "Design, Fabrication and Surface Finish of Metal Tanks and Vessels to be lined for Chemical Immersion Service."

3.10. Ferrous Metals-Preparation Methods

3.10.1 Solvent Cleaning (SSPC-SP1): Solvents such as water, mineral spirits, xylol, toluol, ect., are used to remove solvent-soluble foreign matter from the surface of ferrous metal. Rags and solvents must be replenished frequently to avoid spreading the contaminant rather than removing it. Low-pressure (1500-4000 psi) high volume (3-5) gal./min.) water washing with appropriate cleaning chemicals is a recognized "solvent cleaning" method. All surfaces should be cleaned per this specification prior to using hand tools or blast equipment.

3.10.2 Hand Tool Cleaning (SSPC-SP2) (SSI-St2): A mechanical method of surface preparation involving wire brushing, scraping, chipping and sanding. Not the most desirable method of surface preparation, but can be used for mild exposure conditions. Optimum performances of protective coatings systems should not be expected when hand tool cleaning is employed.

3.10.3 Power Tool Cleaning (SSPC-SP3) (SSI-St3): A mechanical method of surface preparation widely used in industry and involving the use of power sanders or wire brushes, power chipping hammers, abrasive grinding wheels, needle guns, ect. Although usually more effective than hand tool cleaning, it is not considered adequate for use under severe exposure conditions or for immersion applications.

PROPRIETARY AND CONFIDENTIAL
This document and design details are the property of Calgon Carbon Corporation and are not to be reproduced in whole or part, not employed for any purpose other than specifically permitted in writing by Calgon Carbon Corporation. This document is loaned and subject to return on demand.

3.10.4 Power Tool Cleaning to Bare Metal (SSPC-SP11): Utilizing same equipment as Power Tool Cleaning to remove all visible coatings and contaminants to bare metal substrate.

3.10.5 White Metal Blasting (SSPC-SP5), (SSI-Sa3), or (NACE #1): The removal of all visible rust, mill scale, paint, and contaminants, leaving the metal uniformly whit or gray in appearance. This is the ultimate in blast cleaning. Use where maximum performance of protective coatings is necessary due to exceptionally severe conditions such as constant immersion in water or liquid chemicals.

3.10.6 Near White Blast (SSPC-SP10), (SSI-Sa2½), or (NACE #2): In this method all oil, grease, dirt, mill scale, rust, corrosion products, oxides, paint, or other foreign matter have been completely removed from the surface by abrasive blasting, except for very light shadows, very slight streaks or slight discolorations caused by rust stain, mill scale oxides or slight, tight residues of paint of coating. At least 95% of each square inch of surface areas shall be free of all visible residues, and the remainder shall be limited to the light discoloration mentioned above. From a practical standpoint, this is probably the best quality surface preparation that can be expected today for existing plant facility maintenance work.

3.10.7 Commercial Blast (SSPC-SP6), (SSI-Sa2), or (NACE #3): All oil, grease, dirt, rust scale and foreign matter are completely removed from the surface and all rust, mill scale and old paint are completely removed by abrasive blasting except for slight shadows, streaks, or discolorations caused by rust stain, mill scale oxides or slight, tight residues of paint of coating that may remain. If the surface is pitted, slight residues of rust or paint may be found in the bottom of pits: at least two-thirds of each square inch of surface area shall be free of all visible residues and the remainder shall be limited to the light residues mentioned above.

3.10.8 Brush Off Blast (SSPC-SP7), (SSI-Sa1), or (NACE #4): A method in which all oil, grease, dirt, rust scale, loose mill scale, loose rust,

PROPRIETARY AND CONFIDENTIAL
This document and design details are the property of Calgon Carbon Corporation and are not to be reproduced in whole or part, not employed for any purpose other than specifically permitted in writing by Calgon Carbon Corporation. This document is loaned and subject to return on demand.

and loose paint or coatings are removed completely. Tight mill scale and tightly-adhered rust, paint and coatings are permitted to remain. However, all mill scale and rust must have been exposed to the abrasive blast pattern sufficiently to expose numerous flecks of the underlying metal fairly uniformly distributed over the entire surface.

3.10.9 High and Ultra-High Pressure Water Jet Cleaning (SSPC-SP12), or (NACE #5): As part of the surface preparation, deposits of oil, grease, and foreign matter must be removed by ultra-high pressure water jetting, by steam cleaning with detergent, or by methods in accordance with SSPC-SP1. The difference in the degrees of surface cleanliness is defined by the amount of pressure as follows:

Low Pressure Water Cleaning (LP WC)	34 MPa	(5 000 psi)
High Pressure Water Cleaning (HP WC)	34 to 70 MPa	(5,000 to 10,000 psi)
High Pressure Water Jetting (HP WJ)	70 to 170 MPa	(10,000 to 25,000 psi)
Ultra-High Pressure Water Jetting (UHP WJ)	Above 170 MPa	(25,000 psi)

4. SERVICE CONDITIONS

4.1. The lining will be exposed to static and moving water slurries of granular activated carbon, resin and other abrasive media's.

PROPRIETARY AND CONFIDENTIAL
This document and design details are the property of Calgon Carbon Corporation and are not to be reproduced in whole or part, not employed for any purpose other than specifically permitted in writing by Calgon Carbon Corporation. This document is loaned and subject to return on demand.

4.2. The characteristics of the slurries will be as follows:

4.2.1	Media in Water		
4.2.2	Temperature	-	35-100F
4.2.3	pH -	-	5.0 to 9.0
4.2.4	Density	-	26 lbs./cu.ft. up to 36 lbs.cu.ft., Dry
4.2.5	Abrasive	-	Yes

5. MATERIALS

5.1. The lining shall be Plasite 4006 coating material as supplied by Carboline Company. Products from other suppliers or manufacturers are not approved.

6. DELIVERY, STORAGE AND HANDLING

6.1. Product Delivery: Lining material shall be delivered to the site in sealed, original, labeled containers with the Plasite name, product number, batch number, color designation, and instructions for mixing and thinning.

6.2. Storage: Vendor shall be responsible for the proper storage of all coating materials. Damaged, leaking, or unlabeled containers shall be disposed of daily.

6.3. Storage Location: Lining materials shall be stored in a place specifically assigned for that purpose which is dry and out of direct sunlight and stored in a manner so as not to exceed the manufacturer's temperature limitations. In all cases, the storage and handling of lining material shall conform to the requirements of the manufacturer and the applicable safety regulatory agencies.

PROPRIETARY AND CONFIDENTIAL
This document and design details are the property of Calgon Carbon Corporation and are not to be reproduced in whole or part, not employed for any purpose other than specifically permitted in writing by Calgon Carbon Corporation. This document is loaned and subject to return on demand.

7. APPLICATION

7.1. Surface Preparation

7.1.1 The lining vendor shall install and maintain protective coverings on any surface not to be lined to protect the surface during surface preparation and lining application.

7.1.2 Grease, Oil & Interference Material: Surface contamination on bare steel such as grease, oil, tape tags, markings, etc. shall be removed by the vendor by solvent cleaning per SSPC-SPI, SSPC-SP12, or NACE #5 prior to blast cleaning.

7.1.3 Surface Irregularities: Prior to blast cleaning, all surfaces shall be inspected for weld spatter, weld flux, or any other surface irregularities. When discovered, they will be removed by grinding.

7.1.4 Edges: All sharp edges will be ground to a smooth 1/8 inch radius. Areas inside the vessel that are not expected to be in direct contact with media are not required to be chamfered unless noted on the specific detail. (A specific example: the holes in the internal cone design. They do not require a radius or chamfer on their edge since filter nozzles must fit snugly into these holes for proper service.)

7.1.5 Ambient Conditions: Final blast cleaning shall not be performed when the surface temperature is less than 5^0F greater than the dew point temperature of the surrounding air, nor when the relative humidity is greater than 90%.

7.1.6 Compressed Air Cleanliness: The air supply used for blast cleaning shall be free from moisture and oil contamination. The air cleanliness shall be verified at least once per shift for each compressor used. The test involves directing the air stream onto a piece of white paper held not more than 18-inches away from

PROPRIETARY AND CONFIDENTIAL
This document and design details are the property of Calgon Carbon Corporation and are not to be reproduced in whole or part, not employed for any purpose other than specifically permitted in writing by Calgon Carbon Corporation. This document is loaned and subject to return on demand.

the air outlet. The test shall be run downstream of moisture and oil separators for a period of not less than two-minutes. Sufficient freedom from oil and water is confirmed if no soiling or discoloration is visible on the paper. If air contamination is evidenced, the filters shall be changed or cleaned, traps emptied, after-coolers, moisture separators or filters added, the equipment maintained, or such adjustments made as may be otherwise required to achieve clean, dry air for all blast cleaning, coating application, blow-down, or any other quality operations involving compressed air. Verification of this activity will by required by Calgon Carbon Corporation's inspector.

7.1.7 Abrasive/Profile: The abrasive selected shall be identified by the vendor prior to use. The abrasive shall have a sharp, hard cutting surface and shall be dry and free of oil or soluble salt contaminants. Copper slag shall not be used. The abrasive shall provide an anchor pattern of at least 4.0 mils in depth. The surface profile shall be measured using the WPCC 4000 Series Anchor Profile Comparator or Testex replica tape and measuring the results with a calibrated micrometer.

7.1.8 Abrasive Blasting of Carbon Steel: The preparation of all carbon steel shall be by abrasive blast cleaning to remove all mill scale, rust and coatings.

7.1.9 Dry abrasive blast all interior steel surfaces in accordance with SSPC-SP5 or NACE #1, "White Metal Blast Cleaning."

7.2. Coating Application Equipment: Reference Source: Carboline Pa-3 Specification

7.2.1 CONVENTIONAL AIR SPRAY GUNS: The following chart indicates the standard types of conventional air spray guns, nozzles and air caps recommended for the best atomization, material break-up and high production rates. Use of a pot with an agitator is preferred.

Gun Fluid Air

PROPRIETARY AND CONFIDENTIAL
This document and design details are the property of Calgon Carbon Corporation and are not to be reproduced in whole or part, not employed for any purpose other than specifically permitted in writing by Calgon Carbon Corporation. This document is loaned and subject to return on demand.

Binks #2001 66-SS 63-PB

DeVilbiss JGA-510 E 797

Graco P-800 04-02
Note: The same guns may be used with a stainless needle and tip. GUN FLUID AIR Binks #2001 59ASS 251 with a 559SS needle.

7.2.2 Airless Spray Equipment: The airless pump shall be of sufficient size to properly atomize the coating with the spray tip selected. The orifice size required will range between .013" to .035" varying with the viscosity of the coating. In selecting a spray tip, a suitable fan width for the configuration of the substrate shall be of major consideration. The amount of thinner required will vary up to approximately 20% depending on temperature, substrate size and individual technique.

GUN TIP Graco Bulldog (or equivalent) .013"-.035"

The high build vinyl ester coatings require a large capacity pump with a capability of 3 gpm, a minimum tip size of .025" with a 12" spray width recommended. The liquid pressure shall be in the range of 1800 to 2200 psi. Airless spray is not recommended for abrasion resistant formulations because of the extreme wear on the tips and lower units of the pump unless the airless unit is designed for abrasive type of materials.

7.2.3 Airless Spray Advantages and Disadvantages:

Advantages: No problem with contaminated air. Overspray is kept to a minimum and the production rate is high. Thick films may be obtained without runs or sags under some conditions.

Disadvantages: The large output of the gun makes it difficult to handle in small tanks where working conditions are crowded or cramped causing runs or sags.

PROPRIETARY AND CONFIDENTIAL
This document and design details are the property of Calgon Carbon Corporation and are not to be reproduced in whole or part, not employed for any purpose other than specifically permitted in writing by Calgon Carbon Corporation. This document is loaned and subject to return on demand.

Due to the large amount of liquid handled and the easy build properties of this equipment, it is possible, with improper thinning and improper technique, to apply the coating material at too high a rate per pass. The end result usually being solvent entrapment and porous film, runs and sags.

7.2.4 Equipment Manufacturers:

Supplier Name Supplier Address Product or Service

Binks Manufacturing Co.
9201 W. Belmont Avenue
Franklin Park, IL 60131
Air Atomizing & Airless Spray Equipment

DeVilbiss Ransburg
1724 Indian Wood Circle, Ste. F
Maumee, OH 43537
Air Atomizing & Airless Spray Equipment

Graco, Inc.
P.O. Drawer 1441
Minneapolis, MN 55440
Airless Spray Equipment
Nordson Corporation 555 Jackson Street
Amherst, OH 44001
Airless Spray Equipment

7.3. Coating Application

7.3.1 All coatings must be applied in a controlled environment.

7.3.2 Surface Cleanliness: The surface of the prepared steel shall be blown down (clean, dry, compressed air), vacuumed prior to coating application to remove spent abrasive, dust and other interference material. If grease or oil is deposited on the surface, they shall be removed by solvent cleaning (SSPC-SP1) prior to

PROPRIETARY AND CONFIDENTIAL
This document and design details are the property of Calgon Carbon Corporation and are not to be reproduced in whole or part, not employed for any purpose other than specifically permitted in writing by Calgon Carbon Corporation. This document is loaned and subject to return on demand.

coating application. Any rust which has formed shall be removed to the specified degree of cleanliness prior to lining, which may require reblasting.

7.3.3 Ambient Conditions: Coatings shall be applied only when the interior surface and air temperatures are between 60^0F and 100^0F, the relative humidity in the tank is less than 90%, and the temperature of the surface to be painted is at least 5^0F above the dew point temperature of the air in the tank. Metal temperature shall be recorded on the form EAP-2A provided before application of coating under application data, under ST designation, see Appendix A.

7.3.4 Mixing: Lining's to be mixed shall have been delivered to the jobsite and stored in accordance with Section 6 of this specification and shall not have exceeded its shelf life. Mixing shall conform to the requirements of the coating manufacturer.

Mix Part A into Part B using a high-speed mechanical air or an explosion proof motor agitator with mixing blades fitting close to sides of container, making sure all of Part A is completely mixed with Part B for approximately 15 to 30 minutes to be properly blended. Mix Part D (the promoter) into Part A & B until obtaining a smooth liquid free of any streaking from Part D is complete. Part C (the catalyst) can then be mixed into Part A, Part B & Part D blend.

Note: Splitting of kits must not be done.
Caution: The promoter (Part D) and the catalyst (Part C) must be separately mixed into Part A/Part B blend. Any contact of Unmixed Part D with Part C may lead to a fire or explosion.

Caution: Avoid breathing dust.

Only complete kits shall be mixed. Lining which has skinned, gelled, separated, or otherwise deteriorated during storage to the extent that it cannot be remixed to a homogeneous film of the intended viscosity, uniformity and

PROPRIETARY AND CONFIDENTIAL
This document and design details are the property of Calgon Carbon Corporation and are not to be reproduced in whole or part, not employed for any purpose other than specifically permitted in writing by Calgon Carbon Corporation. This document is loaned and subject to return on demand.

consistency shall not be used. Mixed coatings shall not be used beyond their pot life.

7.3.5 Thinning: Only Plasite 20 Thinner shall be used for thinning. The amount of thinning will be limited (except for stripe coat). Thinners, as specified, shall be used to adjust coating for various application conditions. A ratio of 5-20% shall be used depending on ambient conditions and metal temperatures. At 75°F, a suggested thinning ratio is 5-10%; the amount of thinner may be increased at a ratio of approximately 5% per 5°. At higher temperatures, a slower evaporating solvent must be utilized. Thinner should be added if surface temperatures are lower than ambient. A faster evaporating solvent must be utilized in this case.

7.3.6 Methods: Coatings shall be applied by conventional or airless spray equipment. Coating applications shall be in accordance with the requirements of Calgon Carbon Corporation VS-7 Spec, SSPC-PA1 and the Carboline Plasite 4006 Technical Bulletin. In the event of a conflict, the requirements of this specification, manufacturer's instructions and SSPC-PA1I shall prevail in that order. If NSF 61 is specified on the drawing, follow Plasite instructions for compliance to this standard.

7.3.7 Stripe Coat: A stripe coat of Plasite 4006 thinned 50% with Plasite Thinner 20 shall be applied to all edges, corners, welds, crevices and irregularities prior to each full coat application. Such striping shall extend a minimum of 3-inches beyond the edge or irregularity.

7.3.8 Brush Application: Brush application is not allowed except for touch-up repairs, inaccessible areas and stripe coating. Those areas for which the contractor desires to use brush application shall be carefully defined prior to the start of all work.

7.3.9 Agitation: Lining must be kept agitated in conventional spray pots or containers during lining application.

PROPRIETARY AND CONFIDENTIAL
This document and design details are the property of Calgon Carbon Corporation and are not to be reproduced in whole or part, not employed for any purpose other than specifically permitted in writing by Calgon Carbon Corporation. This document is loaned and subject to return on demand.

7.3.10 Coating Thickness: The coating shall be applied in a minimum of two coats. Each coat shall have a dry film thickness of between 13 and 16 mils, with a total system thickness of between 25 and 35 mils. Dry Film Thickness readings need to be taken after each coating of lining. The area then needs to be mapped to recognize the high and low areas. This must be done to avoid too little or too much mileage on the interior of the vessel. High mileage is not an acceptable condition, in most cases the coating will need to be removed to the 25 to 35 mils and the surface condition back to a smooth streamline surface. This is a very expensive process and should be avoided at all cost.

7.3.11 Coating Continuity: All coats shall have smooth, streamline surfaces free of dry spray, over spray, orange peel, fish eyes, craters, bubbles and other significant defects. Shadow-through, honey-comb spray, skips and misses are not acceptable. Runs or sags can be brushed out while the material remains wet. Areas where blast products or other debris have become embedded in the paint film shall be prepared by removing these products and touching up the area. In addition, the final coat shall be tested for discontinuities by performing high-voltage holiday testing at 3,500 volts to obtain a pinhole-free film. Holiday testing shall be performed only after a minimum cure time of 48-hours at 70^0F with ventilation has elapsed after application of the final coat.

7.3.12 Re-coat Time and Cleanliness: Subsequent coats shall be applied only after the previously-applied coat has been allowed to dry as required by the Plasite 4006 Technical Bulletin, but as soon as possible in order to minimize exposure to inter-coat contamination. Any such surface contamination which is present shall be removed prior to the application of subsequent coats.

8. INSPECTION AND TESTING

8.1. Inspection

PROPRIETARY AND CONFIDENTIAL
This document and design details are the property of Calgon Carbon Corporation and are not to be reproduced in whole or part, not employed for any purpose other than specifically permitted in writing by Calgon Carbon Corporation. This document is loaned and subject to return on demand.

8.1.1 The lining vendor shall be responsible for inspecting all phases of the surface preparation and lining application in accordance with Calgon Carbon Corporation's and/or the coating manufacturer's inspection procedures.

8.1.2 Calgon Carbon Corporation reserves the right to inspect all phases of the lining operation to assure compliance with specification requirements. The vendor shall repair/correct any and all deficiencies at his own expense. The vendor shall provide accessibility and lighting for any inspections. It is not intended, however, that the presence or activity of such inspection shall in any way whatsoever relieve the vendor of his obligation to provide inspection of his own to assure compliance with this specification. In all cases, Calgon Carbon Corporation or its approved agent will perform final inspection before acceptance.

8.1.3 Calgon Carbon Corporation reserves the right to stop any and all work at any time for non-compliance with the requirements of this specification.

8.2. Testing

8.2.1 Use a properly calibrated non-destructive Type II dry film thickness gage:

- Positector: Measures non-magnetic coating thickness over ferrous substrates with an accuracy of ±3%. Digital reading remains until next measurement taken.
- MikroTest Thickness Gauge: A highly accurate hand gauge which operates on the attraction power of a permanent magnet through a non-magnetic coating to the base steel with an accuracy of ±5%.

Frequency and method of calibration shall be in accordance with the SSPC-PA-2.

PROPRIETARY AND CONFIDENTIAL
This document and design details are the property of Calgon Carbon Corporation and are not to be reproduced in whole or part, not employed for any purpose other than specifically permitted in writing by Calgon Carbon Corporation. This document is loaned and subject to return on demand.

8.2.2 Determine the average dry film thickness of the lining. All areas with less than 30 mil DFT must have additional lining sprayed on before spark test. High or low areas that require remedial action will be marked so on the lining with chalk. When work is completed, all chalk markings shall be removed. Run thickness test prior to spark test.

8.2.3 One (1) reading shall be taken every 10-ft² and any reading outside of the manufacturer's acceptable range, either higher or lower, will require four (4) additional readings 1-ft in each direction from the suspect reading. Any average of the five (5) readings will be figured and must fall within the manufacturer's acceptable range. If not, mark the area to be corrected with chalk.

8.2.4 After all the readings are taken, they are to be averaged in three (3) sections: top head, shell, and the bottom head or cone. These three averages, along with all the readings taken, shall be recorded on a Calgon Carbon Lining Inspection Report (Appendix A).

8.2.5 For method and frequency of calibration for the dry-film thickness gauge, see the calibration section of the Manufacturer's information. Any areas not in compliance shall be marked for remedial action with chalk by the inspector.

8.2.6 Spark test for pinholes with a 4500 VDC detector on all coated surfaces. A Tinker and Rasor Model AP-W, or equivalent device, is required for this operation; 3500-volt maximum, minimum 48-hours at 70°F cure before spark test is run.

9. SPECIAL REQUIREMENTS FOR NSF-61 (WHEN SPECIFIED)

9.1. When the end-use application requires compliance with NSF-61, Carboline Plasite must be applied in accordance with specific instructions found in the product bulletin. Applicator must follow these specific instructions.

PROPRIETARY AND CONFIDENTIAL
This document and design details are the property of Calgon Carbon Corporation and are not to be reproduced in whole or part, not employed for any purpose other than specifically permitted in writing by Calgon Carbon Corporation. This document is loaned and subject to return on demand.

9.2. Calgon Carbon Corporation will notify lining vendor that this section (9.0) applies by signifying such in the purchase order and/or drawings.

9.3. Force curing may follow the date of application but must be completed prior to the disinfection of the vessel at customer site.

9.4. The NSF criteria specified by Carboline Plasite cannot be altered.

9.5. Force curing must be conducted in a controlled manner. Heat rise shall be not greater than 1 degree per minute, up to the maximum temperature needed to achieve a 200 F minimal surface temperature. This is critical to avoid blistering or post-cure holidays.

9.6. Heat should be applied at top or bottom head to allow equal flow of hot air. If heating in the shell, there should be an internal attachment to allow heat to distribute equally so there is not a section of lining that heats faster than the rest. See appendix for recommended flow distribution according to Plasite's guide.

9.7. A strip recorder with multiple thermocouples (or other similar device) shall be used to record the temperature during the force cure process. Records shall be forwarded to Calgon Carbon Corporation for retention. Please send to the attention of Quality Inspector, Equipment and Assembly Plant, at 4301 Grand Ave, Neville Island, PA 15225.

PROPRIETARY AND CONFIDENTIAL
This document and design details are the property of Calgon Carbon Corporation and are not to be reproduced in whole or part, not employed for any purpose other than specifically permitted in writing by Calgon Carbon Corporation. This document is loaned and subject to return on demand.

10. APPENDIX A- INSPECTION PROCEDURE

PROPRIETARY AND CONFIDENTIAL
This document and design details are the property of Calgon Carbon Corporation and are not to be reproduced in whole or part, not employed for any purpose other than specifically permitted in writing by Calgon Carbon Corporation. This document is loaned and subject to return on demand.

APPENDIX A-INSPECTION PROCEDURE

SECTION ONE-SURFACE PREPARATION

Job Number:_____Vessel Number:_____
Final Inspection:_____

Acceptable

1. Verify prior to blast cleaning that sharp edges, weld spatter, slivers, laminations, scabs or any other surface irregularities have been adequately removed to provide a surface suitable for coating application.

Yes ☐ No ☐ **Verified By:_____Date:_____**

2. Verify prior to blast cleaning that heavy deposits of oil and/or grease have been adequately removed in accordance with "Solvent Cleaning" (SSPC-SPI).

Yes ☐ No ☐ **Verified By:_____Date:_____**

3. Prior to blast cleaning operations, perform compressed air cleanliness test at least once per eight-hour shift. Insert a clean, white blotter or clean, white paper into the air stream no more than 18-inches from air source downstream of moisture and oil separators for approximately two minutes. Examine the blotter or paper for signs of moisture and/or oil contamination. Blast cleaning should not begin unless air is free of detrimental amounts of oil and/or water.

Yes ☐ No ☐ **Verified By:_____Date:_____**

PROPRIETARY AND CONFIDENTIAL
This document and design details are the property of Calgon Carbon Corporation and are not to be reproduced in whole or part, not employed for any purpose other than specifically permitted in writing by Calgon Carbon Corporation. This document is loaned and subject to return on demand.

APPENDIX A-INSPECTION PROCEDURE

SECTION ONE-SURFACE PREPARATION (Continued)

Job Number:_____Vessel Number:_____
Final Inspection:_____

Acceptable

4. Verify that only clean and dry abrasives will be used. If bulk abrasive is to be used, verify that the abrasive is properly protected from rain, moisture and oil. Yes ☐ No ☐ **Verified By:_____Date:_____**

5. If abrasives are recycled, test for the presence of abrasive contamination. Add approximately one ounce of recycled abrasive to several ounces of clean water. Shake contents vigorously and visually examine the water level for signs of oil contamination. Yes ☐ No ☐ **Verified By:_____Date:_____**

6. Angular abrasive that will provide an anchor profile depth minimum equal to the SPCC 4000 Series Blast Comparator will be used. Yes ☐ No ☐ **Verified By:_____Date:_____**

7. Verify that required protective coverings are intact to assure that previously-coated surfaces will not be damaged during blast cleaning operations. Yes ☐ No ☐ **Verified By:_____Date:_____**

APPENDIX A-INSPECTION PROCEDURE

SECTION ONE-SURFACE PREPARATION Job Number:_____Vessel Number:_____

PROPRIETARY AND CONFIDENTIAL
This document and design details are the property of Calgon Carbon Corporation and are not to be reproduced in whole or part, not employed for any purpose other than specifically permitted in writing by Calgon Carbon Corporation. This document is loaned and subject to return on demand.

(Continued) Final Inspection:_____

8. Monitor and record ambient conditions and surface temperatures during blast cleaning operations using a psychrometer, surface temperature thermometer and U.S. Weather Bureau Tables. Yes ☐ No ☐ **Verified By:**_____**Date:**_____

9. "Final blast cleaning" shall not be performed unless the surface temperature is at least 50°F higher than the dew point. "Rough blasting" may be performed regardless of ambient conditions, but must be "final blast cleaned" when conditions become favorable. Yes ☐ No ☐ **Verified By:**_____**Date:**_____

10. Verify that blast cleaned surfaces have been prepared in accordance with SSPC-SP5, SSI-Sa3, or NACE#1, "White Metal Blast Cleaning". SSPC-VIS-1 may be used as a visual reference. Mark all non-conforming areas with chalk or spray paint for rework. Yes ☐ No ☐ **Verified By:**_____**Date:**_____

APPENDIX A-INSPECTION PROCEDURE

SECTION ONE-SURFACE PREPARATION Job Number:_____Vessel Number:_____
(Continued) Final Inspection:_____

11. Verify the profile (4 mils minimum) has been achieved using the WPCC 4000 Series Blast Comparator. Yes ☐ No ☐ **Verified By:**_____**Date:**_____

PROPRIETARY AND CONFIDENTIAL
This document and design details are the property of Calgon Carbon Corporation and are not to be reproduced in whole or part, not employed for any purpose other than specifically permitted in writing by Calgon Carbon Corporation. This document is loaned and subject to return on demand.

12. Using a dry film thickness gage, determine the magnetic base reading and record. Yes ☐ No ☐ **Verified By:**_____**Date:**_____

SECTION TWO- LINING MATERIAL PREPARATION

1. Verify that all containers are sealed, intact and properly labeled. Yes ☐ No ☐ **Verified By:**_____**Date:**_____

2. Verify that all coating material temperatures are at least 60°F before mixing by the use of a stem thermometer. Yes ☐ No ☐ **Verified By:**_____**Date:**_____

3. Verify type of coating mixed, record and retain batch numbers of all components, type of thinner and batch number, thinning ratios, time of mix, maximum pot life, etc. Yes ☐ No ☐ **Verified By:**_____**Date:**_____

APPENDIX A-INSPECTION PROCEDURE

SECTION TWO- LINING MATERIAL PREPARATION (Continued)

Job Number:_____Vessel Number:_____
Final Inspection:_____

4. Verify that all three components are combined and thoroughly mixed in the proper proportions to obtain a uniform color, free of lumps. Yes ☐ No ☐ **Verified By:**_____**Date:**_____

PROPRIETARY AND CONFIDENTIAL
This document and design details are the property of Calgon Carbon Corporation and are not to be reproduced in whole or part, not employed for any purpose other than specifically permitted in writing by Calgon Carbon Corporation. This document is loaned and subject to return on demand.

5. Verify that only the recommended thinner is used. Yes ☐ No ☐ **Verified By:**_____**Date:**_____

6. Verify that the pot life is observed. Yes ☐ No ☐ **Verified By:**_____**Date:**_____

APPENDIX A-INSPECTION PROCEDURE

SECTION THREE- APPLICATION LINING

Job Number:_____Vessel Number:_____
Final Inspection:_____

1. Monitor and record ambient conditions and surface temperatures every three to four hours during lining application using a psychrometer, surface temperature thermometer and U.S. Weather Bureau Tables. Coating application shall not be permitted when the surface temperature is less than 50°F above the dew point. No coatings shall be applied when the surface and/or material temperatures are less than 70°F. No coating shall be applied when the surface temperature is expected to drop below 60°F before it has dried. Coating application shall not be permitted when the relative humidity is greater than 90%. Yes ☐ No ☐ **Verified By:**_____**Date:**_____

2. Verify compressed air cleanliness and test for conventional spray application and blow down operations (see Section 9.1.3). Plasite 4006 must be applied using an agitated conventional pressure pot using continuous agitation during application. Yes ☐ No ☐ **Verified By:**_____**Date:**_____

PROPRIETARY AND CONFIDENTIAL
This document and design details are the property of Calgon Carbon Corporation and are not to be reproduced in whole or part, not employed for any purpose other than specifically permitted in writing by Calgon Carbon Corporation. This document is loaned and subject to return on demand.

APPENDIX A-INSPECTION PROCEDURE

SECTION THREE- APPLICATION LINING (Continued)

Job Number:_____Vessel Number:_____
Final Inspection:_____

3. Verify that protective coverings previously established are intact.

Yes ☐ No ☐ **Verified By:**_____**Date:**_____

4. Verify that surrounding air is free of airborne contaminants prior to the application of coatings.

Yes ☐ No ☐ **Verified By:**_____**Date:**_____

5. Verify intercoat cleanliness and that blast-cleaned surfaces have been cleaned to assure that coatings will not be applied over oil, grease, dirt, dust, spent abrasive, etc.

Yes ☐ No ☐ **Verified By:**_____**Date:**_____

SECTION FOUR- APPLICATION OF FIRST COAT

1. Verify that Plasite 4006 has been applied to all surfaces prepared that day before visual oxidation takes place. Any surfaces not primed the same day shall be reblasted prior to primer application.

Yes ☐ No ☐ **Verified By:**_____**Date:**_____

PROPRIETARY AND CONFIDENTIAL
This document and design details are the property of Calgon Carbon Corporation and are not to be reproduced in whole or part, not employed for any purpose other than specifically permitted in writing by Calgon Carbon Corporation. This document is loaned and subject to return on demand.

APPENDIX A-INSPECTION PROCEDURE

SECTION FOUR- APPLICATION OF FIRST COAT (Continued)

Job Number:_____Vessel Number:_____
Final Inspection:_____

2. Verify that weld seams have been brush-coated at least 3-inches on each side of seam prior to spray application.

Yes ☐ No ☐ **Verified By:**_____**Date:**_____

3. Verify that the first coat has been applied to a dry film thickness of 13-16 mils. Perform dry film thickness tests in accordance with SSPC-PA2.
(Deduct magnetic base reading.)

Yes ☐ No ☐ **Verified By:**_____**Date:**_____

SECTION FIVE- APPLICATION OF FINAL COAT

1. Verify that previously-coated surfaces have dried at least eight hours at 70°F with ventilation prior to application of second coat.

Yes ☐ No ☐ **Verified By:**_____**Date:**_____

2. b) Verify that the final coat has been applied to a dry film thickness of 13-16 mils. Perform dry film thickness test in accordance with SSPC-PA2.
(Deduct primer thickness.)

Yes ☐ No ☐ **Verified By:**_____**Date:**_____

APPENDIX A-INSPECTION PROCEDURE

PROPRIETARY AND CONFIDENTIAL
This document and design details are the property of Calgon Carbon Corporation and are not to be reproduced in whole or part, not employed for any purpose other than specifically permitted in writing by Calgon Carbon Corporation. This document is loaned and subject to return on demand.

SECTION SIX- FINAL INSPECTION OF LINED SURFACES Job Number:_____Vessel Number:_____
Final Inspection:_____

1. Verify that all surfaces have a smooth and uniform appearance free of any irregularities such as debris inclusions, scuff marks or spatter. Yes ☐ No ☐ **Verified By:**_____**Date:**_____

2. Verify that the total dry film thickness (minimum two coats) is 25-35 mils. Perform dry film thickness test in accordance with SSPC-PA2. Yes ☐ No ☐ **Verified By:**_____**Date:**_____

3. Allow 48-hours cure at 70°F before holiday testing. Verify that a void-free, continuous film has been achieved by performing high-voltage holiday detection on 100% of the coated surfaces. The voltage shall be set at 3,500-volts. Mark all discovered holidays and re-test all repairs. Yes ☐ No ☐ **Verified By:**_____**Date:**_____

4. All repairs shall be made in strict accordance with this specification. Yes ☐ No ☐ **Verified By:**_____**Date:**_____

PROPRIETARY AND CONFIDENTIAL
This document and design details are the property of Calgon Carbon Corporation and are not to be reproduced in whole or part, not employed for any purpose other than specifically permitted in writing by Calgon Carbon Corporation. This document is loaned and subject to return on demand.

APPENDIX A

VESSEL LINING INSPECTION REPORT
QUALITY CONTROL PROCEDURE EAP-2

PROJECT/STOCK NO._____ N.B. NO._____ DATE_____

COMPANY_____ INSPECTOR_____

TYPE OF LINING_____ D.F.T. REQUIRED_____

TYPE OF PAINT_____ D.F.T. REQUIRED_____

EXTERIOR INSPECTION_____

_____

INTERIOR INSPECTION (VISUAL & UNDER CONE)_____

_____

HIGH D.F.T. READINGS:	TOP_____	BOTTOM_____	SHELL_____
LOW D.F.T. READINGS:	TOP_____	BOTTOM_____	SHELL_____
AVG. D.F.T. READINGS:	TOP_____	BOTTOM_____	SHELL_____

CONTINUITY TEST (VOLTS_____) _____

REPAIRS REQUIRED: NO_____ YES_____

COMMENTS_____

_____

_____

_____

_____

ALL REPAIRS HAVE BEEN MADE/INSPECTED AS DIRECTED ABOVE: DATE_____

BY_____ AUTHORIZED APPROVAL BY_____

(APPLICATOR IS REQUIRED TO COMPLETE FORM AND RETURN WITHIN FIVE (5) WORKING DAYS OF CALGON CARBON'S INSPECTION.)

FAX TO: (412) 264-2060
CALGON CARBON CORPORATION
ATTENTION: Quality Inspector

PROPRIETARY AND CONFIDENTIAL
This document and design details are the property of Calgon Carbon Corporation and are not to be reproduced in whole or part, not employed for any purpose other than specifically permitted in writing by Calgon Carbon Corporation. This document is loaned and subject to return on demand.

APPENDIX A LINING / COATING REPORT
QUALITY CONTROL PROCEDURE EAP-15D
****

PROJECT SHORTNAME_____NAT=L. BOARD NO._____

PRE-SURFACE PREPARATION	
RADIUSED EDGES: Y___ N___	WELD SURFACE CONDITION: G___ B___
WELD SPATTER: Y___ N___	STEEL CLEANLINESS: G___ B___

SURFACE PREPARATION

INTERIOR BY _____ REQ=D. SSPC SP_____

REQ=D. ANCHOR PATTERN _____ MILS ACTUAL_____

PROFILE CLEANED: Y___ N___

LAP JOINTS FREE: Y___ N___

EXTERIOR BY_____ REQ=D. SSPC SP_____

SUBSTRATE CLEANED: Y___ N___

AMBIENT CONDITION

DATE	PRES.	W.B.	D.B.	D.P.	R.H.	S.T.

PROPRIETARY AND CONFIDENTIAL
This document and design details are the property of Calgon Carbon Corporation and are not to be reproduced in whole or part, not employed for any purpose other than specifically permitted in writing by Calgon Carbon Corporation. This document is loaned and subject to return on demand.

APPENDIX A ***APPLICATION***

INTERIOR COATING SPEC_____ D.F.T. REQ=D._____

*** FIRST COAT ***

MIXED BY_____ DATE_____ PART 1_____

APPLIED BY_____ DATE_____ PART 2_____

*** SECOND COAT ***

MIXED BY_____ DATE_____ PART 1_____

APPLIED BY_____ DATE_____ PART 2_____

*** THIRD COAT ***

MIXED BY_____ DATE_____ PART 1_____

APPLIED BY_____ DATE_____ PART 2_____

EXTERIOR COATING SPEC_____ D.F.T REQ=D_____

*** FIRST COAT ***

MIXED BY_____ DATE_____ PART 1_____

APPLIED BY_____ DATE_____ PART 2_____

APPENDIX A *** SECOND COAT ***

PROPRIETARY AND CONFIDENTIAL
This document and design details are the property of Calgon Carbon Corporation and are not to be reproduced in whole or part, not employed for any purpose other than specifically permitted in writing by Calgon Carbon Corporation. This document is loaned and subject to return on demand.

MIXED BY_____ DATE_____ PART 1_____

APPLIED BY_____ DATE_____ PART 2_____

*** THIRD COAT ***

MIXED BY_____ DATE_____ PART 1_____

APPLIED BY_____ DATE_____ PART 2_____

(Page 2 of 2)

PROPRIETARY AND CONFIDENTIAL
This document and design details are the property of Calgon Carbon Corporation and are not to be reproduced in whole or part, not employed for any purpose other than specifically permitted in writing by Calgon Carbon Corporation. This document is loaned and subject to return on demand.

APPENDIX A

Lining:

Top Head

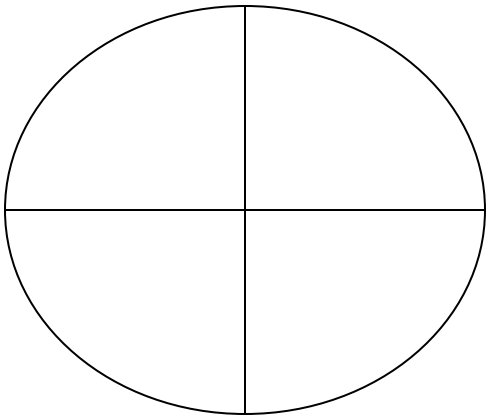

Main Body

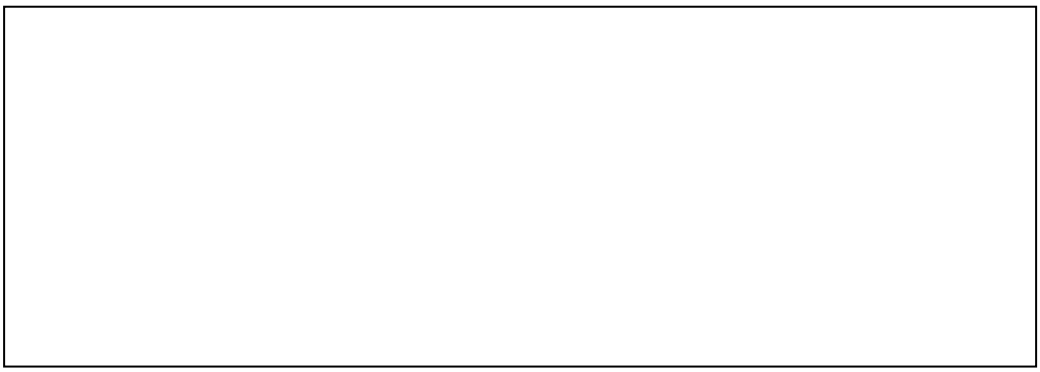

Bottom Head

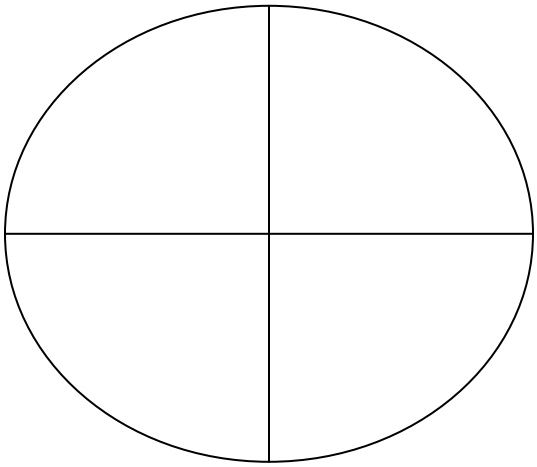

PROPRIETARY AND CONFIDENTIAL
This document and design details are the property of Calgon Carbon Corporation and are not to be reproduced in whole or part, not employed for any purpose other than specifically permitted in writing by Calgon Carbon Corporation. This document is loaned and subject to return on demand.

APPENDIX A

Paint:

Top Head

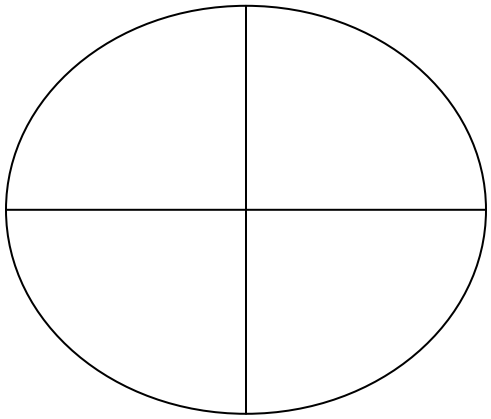

Main Body

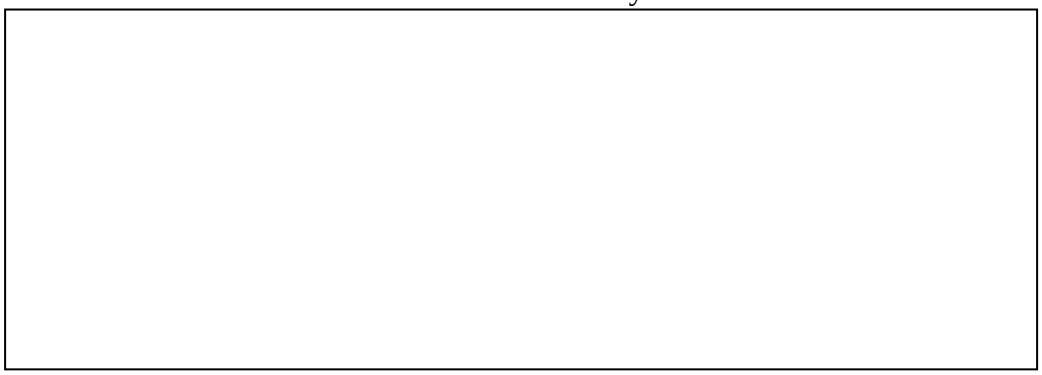

Bottom Head

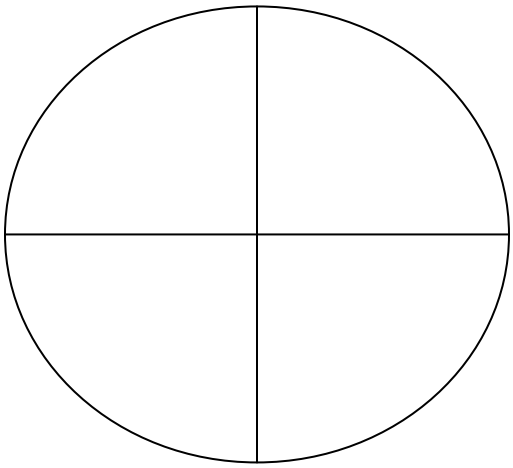

PROPRIETARY AND CONFIDENTIAL
This document and design details are the property of Calgon Carbon Corporation and are not to be reproduced in whole or part, not employed for any purpose other than specifically permitted in writing by Calgon Carbon Corporation. This document is loaned and subject to return on demand.

APPENDIX A

Applicator's Report
Quality Control Procedure EAP-2A

Company_____ Nat'L Board No.#_____Model Type_____

**** * Surface Preparation * ****

CONDITION OF INTERIOR FROM FABRICATOR_____

_____

TESTEX TAPE SAMPLE (4-mil Min.)

SIZE/TYPE OF ABRASIVE_____
DATE OF BLAST_____

TOP	SHELL	BOTTOM

**** * APPLICATION DATA * ****

	Date	W.B.	D.B.	% R.H.	D.P.	S.T.	Coating Type Batch No.#
Coat 1							
Coat 2							
Coat 3							
Exterior							
Exterior							

***** APPLICATOR'S INSPECTION *****

VISUAL_____

D.F.T. AVG._____ D.F.T. RANGE_____

CONTINUITY TEST_____

_____

INSPECTED BY _____

PROPRIETARY AND CONFIDENTIAL
This document and design details are the property of Calgon Carbon Corporation and are not to be reproduced in whole or part, not employed for any purpose other than specifically permitted in writing by Calgon Carbon Corporation. This document is loaned and subject to return on demand.

11. Appendix B- Plasite 4006 Product Data

product data

carboline®

PLASITE® 4006
NSF Certified

Includes PLASITE 4006HAR

NSF/ANSI 61

TYPE
PLASITE 4006: A vinyl ester resin combined with pigments to provide a high build coating with excellent chemical resistance. PLASITE 4006HAR: A high build vinyl ester coating specially formulated for excellent abrasion resistance.

INTENDED USE
As a chemical-resistant coating for tank lining service and as a maintenance coating to protect against corrosive conditions encountered in waste treatment, chemical/food processing and carbon filters. When combined with abrasive conditions, use PLASITE 4006HAR.

GOVERNMENT AGENCY ACCEPTANCE
PLASITE 4006 and 4006HAR meet the requirements of the U.S. Food and Drug Administration, 21 CFR 175.300 and 177.2420.

NSF REQUIREMENT GUIDE
PLASITE 4006 (Off White, Gray and Yellow Oxide) and PLASITE 4006HAR (Off White and Gray) are certified to NSF/ANSI Standard 61 for cold potable water when the following requirements are met. The tank is 3,000 gallons/11,350 liters or larger. PLASITE Thinner #20, up to a maximum of 5% by volume, must be used for thinning purposes. The coating must be applied in two to three coats to a maximum thickness of 35 mils/0.88 DFT. Prior to placing the lining in service, it must be force cured at 200°F/93°C metal temperature for four hours.

TEMPERATURE RESISTANCE
Dry film basis is 250-300°F/121-149°C. Immersion temperature or splash and spill limits are determined by chemical exposure - please consult with Carboline Technical Service Department for further information.

VOC CONTENT

	Coating as Supplied (Determined Theoretically)		Thinned 5% by Volume with Plasite Thinner #20 (Determined Theoretically)	
Color	**Lbs./Gal.**	**g/L**	**Lbs./Gal.**	**g/L**
Off White, Gray, Yellow Oxide	0.34 ± 2%	42 ± 2%	0.64 ± 2%	77 ± 2%

COLORS
PLASITE 4006: Off White; Gray; Yellow Oxide.
PLASITE 4006HAR: Off White, Gray.

FILM THICKNESS PER COAT
One multi-pass spray coat will produce approximately 15 mils/380 microns DFT. When PLASITE 4006 (4006HAR) is used as an IMMERSION lining in corrosive services (dilute acids, etc.), use of a 30 mils/750 microns system applied in a minimum of two coats is recommended. CHEMICAL FUMES AND SPILLAGE normally require two coats at 20-30 dry mils/500-750 microns DFT.

PACKAGING
A one-gallon kit consists of:
One 1-gallon can of Part A
One small container of Part B
One small container of catalyst Part C

A five-gallon kit consists of:
One 5-gallon can of coating Part A
One small container of promotor Part B
One small container of catalyst Part C

COVERAGE
28-30 sq. ft./gallon (2.6-2.8 sq. m/gallon) at 30 mils/0.75 mm.

RECOATING TIME
May be recoated after initial hardening or set which will normally occur in 3 to 6 hours at 75°F/24°C. Following coats must be applied within 30 days.

PHYSICAL SPECIFICATIONS

Abrasion Resistance:…….. 87.6 mg
(ASTM D-4060, PLASITE 4006HAR: 37.5 mg, CS-17 wheel)

***Surface Hardness** (ASTM D2240)…….Shore D: 91

Solid:……...72% ± 2% by weight; 55% ± 2% by volume.

Pot Life:……..……1 hour @ 70-80°F

Shelf Life:……..60 days at 70°F

Spray Viscosity:…..…At 70°F/21°C, 17 ± 5 seconds
Ford Cup #4.

Shipping Weight:……..Approximately 13 lbs./gallon.

Thermal Shock:……..Unaffected in 5 cycles,
minus 70°F/21°C to plus 212°F.

Gloss:……Low sheen.

***Note**: Above tests were conducted on film cured at 150°F.

CHEMICAL RESISTANCE
Resistant to chemical effluents, organic and inorganic acids, corrosive liquids, salts, and water. PLASITE 4006HAR also provides protection against abrasion conditions encountered in agitated or flowing solutions.

It is recommended each following coat be diluted approximately 2 to 5% with PLASITE Thinner #20.

Note: Previously applied coating exposed to an accumulation of 24 hours of sunlight or surface temperatures in excess of 130°F/54°C may result in intercoat disbondment. An applied coating film should be topcoated before an accumulation of 24 hours exposure has occurred, or special procedures (such as shading with tarps) should be used. Care must be taken to avoid contamination between coats.

THINNERS
Use PLASITE Thinner #20. 2 to 5% thinning may be required to adjust coating for higher temperatures and various application conditions. Topcoating of previously applied films will require the addition of 2 to 5% thinner. Consult Carboline Technical Service Department for unusual thinning requirements. See RECOATING TIME section.

CLEANUP THINNER: Thinner #71

CURING
Curing time is 7 days at 70°F/21°C or 5 days at 90°F/32°C. Although coating may be applied at substrate temperatures as low as 60°F/16°C, the substrate temperature must be raised to a least 70°F/21°C within 12 hours and held until coating surface is tack free (approximately 10 hours) to avoid possible loss of cure. A minimum of 70°F/21°C surface temperature is required to obtain polymerization of this coating.

Listed below are a few curing schedules that may be used for time and work planning. Prior to raising the metal to the force curing temperature, it is necessary that an air dry time of 2 to 5 hours at temperatures from 70-100°F/21-38°C be allowed. After the air dry time has elapsed, the temperature should be raised in increments of approximately 30°F/17°C every 30 minutes until the desired force curing metal temperatures are reached. Any moisture from condensation of any source will kill the cure on freshly applied coating before it reaches a “non-tacky” stage. In order to assure removal of solvents and odor, force curing is generally recommended when coating is to be used in potable water and food material service. A force cure at 200°F/93°C metal temperature for 4 hours is necessary to comply with NSF Standard 61 requirements.

To the best of our knowledge the technical data contained herein is true and accurate on the date of publication and is subject to change without prior notice. User must contact Carboline Company to verify correctness before specifying or ordering. No guarantee of accuracy is given or implied. We guarantee our products to conform to Carboline quality control. We assume no responsibility for coverage, performance or injuries resulting from use. Liability, if any, is limited to replacement of products. NO OTHER WARRANTY OR GUARANTEE OF ANY KIND IS MADE BY CARBOLINE, EXPRESS OR IMPLIED, STATUTORY, BY OPERATION OF LAW, OR OTHERWISE, INCLUDING MERCHANTABILITY AND FITNESS FOR A PARTICULAR PURPOSE. Carboline® and Plasite® are registered trademarks of Carboline Company.

PLASITE®4006

NSF Certified

METAL TEMPERATURE	CURING TIME	METAL TEMPERATURE	CURING TIME
110°F/43°C	72 Hrs	160°F/71°C	4 ½ Hrs
120°F/49°C	36 Hrs	170°F/77°C	3 ½ Hrs
130°F/54°C	18 Hrs	180°F/82°C	2 ½ Hrs
140°F/60°C	10 Hrs	190°F/88°C	2 Hrs
150°F/66°C	6 Hrs	200°F/93°C	1 ¾ Hrs

SURFACE PREPARATION

Steel - High Temperature & Immersion Service

All sharp edges shall be ground to produce a radius and correct all imperfections such as skip welds, delaminations, scabs, slivers and slag prior to abrasive blasting. Skip welds shall be welded solid.

Degrease surface prior to sandblasting. Use organic solvents, alkaline solutions, steam, hot water with detergents or other systems that will completely remove dirt, oil, grease, etc. Used tanks may require additional decontamination.

The surface shall be blasted to NACE No. 1 or SSPC-SP5 white metal using a Venturi blast nozzle with 100 psi/7 bars air. Use a properly graded, clean, sharp angular abrasive, similar to Humble Abrasive Flint S7 (6 to 30 mesh), Steel Grit (HG25), or BLACK BEAUTY® (BB10
40) to produce the anchor pattern as required. The degree of profile shall be a minimum of 4 mils/0.1 mm as determined by comparing Carboline's blasted panel, using adequate light and magnification as required. Comparator panel is available to inspectors on a job basis. If clarification is required as to how to develop this anchor pattern, consult Carboline's Technical Service Department or your sales representative.

Remove all traces of grit and dust, as well as embedded abrasives, with a vacuum cleaner and/or by brushing. Care should be taken to avoid contaminating the surface with fingerprints or from detrimental material on the workers' clothes.

The surface temperature shall be maintained at a minimum of 5°F/3°C above the dew point to prevent oxidation of the surface. The coating shall be applied within the same day that the surface has been pre- pared. Visible oxidation or condensation is not allowed.

Steel - Service in Severe Corrosive Environments - Splash & Fume

Surface preparation is the same as above except NACE No. 2 or SSPC-SP10 near white metal blast may be used, provided the anchor pattern as described above is achieved.

Concrete

Immersion Service

All concrete surfaces require whip blasting for immersion service. Fully cured concrete (minimum 28 day cure) must be blasted to provide a hard, firm, clean and neutral surface for coating. All concrete surfaces must be filled and sealed with the appropriate Carboline filler sealer, applied in accordance with the corresponding Carboline product data sheet. All surface imperfections, "bug holes," etc. must be completely repaired before application of PLASITE 4006.

Strong Fumes and Splash Spill

Severity of expected service will dictate proper concrete surface preparation. Contact the Carboline Technical Service Department for surfaces other than steel and concrete.

APPLICATION

Mixing

The promotor (Part B) and catalyst (Part C) are supplied in separate containers and are premeasured for the coating unit supplied. Thoroughly mix the coating (Part A). After the pigments and liquid are thoroughly mixed, add the entire amount of the measured liquid promotor (Part B). MIX COMPLETELY! NO COLOR STREAKING OR RESIDUE OF PART B SHOULD REMAIN ON CONTAINER SIDEWALLS. Add the catalyst (Part C) and mix completely with the coating.

Warning! The promotor (Part B) and the catalyst (Part C) must be separately mixed into the coating (Part A). Any contact of unmixed Part B with Part C may lead to a fire or explosion!

Atomizing Spray Equipment

Conventional atomizing spray system shall be equal to: Binks Model 2001 gun with 59ASS fluid nozzle, 251 air cap and 559SS needle. A heavy-duty trigger spring is recommended with a pot pressure of approximately 50 psi/3.5 bars and atomizing pressure of approximately 60 psi/4.1 bars. Use standard production type pressure pot with air motor drive agitator.

Airless Spray Equipment

Airless spray system requires a large capacity pump with a capacity of 3 g.p.m./11 l.p.m. similar or equal to Graco Bulldog with 0.025 in./0.63 mm or larger fluid nozzle. A 12 in. minimum spray width is recommended. Use liquid pressure of approximately 1600-1800 psi/110-120 bars. All screens should be removed from pump and gun. A 3/8 in. diameter fluid line is recommended. Continuous mixing during use is required.

Note: Airless spray is NOT recommended for PLASITE 4006HAR.

A minimum surface temperature of 70°F/21°C is required to obtain polymerization of the coating system. Coating can be applied at a surface temperature as low as 60°F/16°C but polymerization will not take place. Succeeding coats cannot be applied without damaging the system until the surface temperature rises sufficiently to obtain polymerization. Refer to CURING. When surface temperatures are over 100°F/38°C, consult the laboratory for special thinner and thinning instructions. The mixed coating shall be applied utilizing a multi-pass spray system. Apply horizontal and vertical passes with 50% overlap. Special precautions are required at overlaps and welds to eliminate excessive film build.
Spray gun should be perpendicular to surface at all times, approximately 14 in./36 cm from surface.

Coating may be overcoated after initial "set" which will occur normally in 3 to 6 hours at 70°F/21°C with proper ventilation. Initial "set" time will decrease as surface temperature increases.

Warning! Refer to RECOATING TIME.

When physical contact (foot traffic, scaffolding, etc.) with the previously applied coating is required, a minimum of 10 hours at 70°F/21°C substrate and air temperature with ventilation is normally required before proceeding. Previously applied coats must have reached a "non-tacky" state before being exposed to physical contact. This condition will occur in less time as surface temperature increases. Over coating shall be performed as soon as possible to prevent contamination.

Brush

Brush application is not recommended, but may be used for repairs or touch-up. Continuous mixing during use is required.

LINING REPAIR

Clean damaged area, removing all contaminants and loose coating.

Abrasive blast substrate to original specification where coating has been exposed to environment and where oxidation is evident. Feather the original coating not less than 2 in./5 cm from damaged area.
If new coating is physically damaged and has not been in service, repair as shown above.
For repairing holidays, sand surface and brush apply proper thickness of coating.

Apply coating by brush or spray. Do not apply by brush on areas larger than 1 sq. ft/0.1 sq. m.

Warning: Contamination of previously exposed coating film may be detrimental to adhesion of the repair and may affect service life expectancy.

INSPECTION

Degree of surface preparation shall conform to appropriate specifications as outlined in SURFACE PREPARATION section.

Metal temperature shall be recorded at least every 4 hours and before application of coating. Humidity (wet bulb reading) shall be taken to ensure that metal temperature is at least 5°F/3°C higher than wet bulb temperature. Dry bulb temperatures shall be recorded at the same time to ensure curing.

For immersion service, a pinhole-free film is essential and testing with Tinker & Rasor Model AP-W or Stearns Model 14/20 or equivalent is required on final film. Use 3000 volts at the recommended 30 mils/0.75 mm DFT. Allow a minimum cure of 48 hours at 70°F/21°C or 36 hours at 90°F/32°C before holiday testing.

Dry film thickness shall be determined utilizing a non-destructive, magnetic type, high range gauge. The anticipated film thickness shall be in the middle range of the gauge.

To the best of our knowledge the technical data contained herein is true and accurate on the date of publication and is subject to change without prior notice. User must contact Carboline Company to verify correctness before specifying or ordering. No guarantee of accuracy is given or implied. We guarantee our products to conform to Carboline quality control. We assume no responsibility for coverage, performance or injuries resulting from use. Liability, if any, is limited to replacement of products. NO OTHER WARRANTY OR GUARANTEE OF ANY KIND IS MADE BY CARBOLINE, EXPRESS OR IMPLIED, STATUTORY, BY OPERATION OF LAW, OR OTHERWISE, INCLUDING MERCHANTABILITY AND FITNESS FOR A PARTICULAR PURPOSE. Carboline® and Plasite® are registered trademarks of Carboline Company.

Refer to Plasite Bulletin PA-3, Section 3, for inspection requirements.

This data sheet provides standard information on the coating and application procedure. Since varying conditions may not be covered, consult your local sales representative or Carboline Technical Service Department for further information.

SAFETY
READ THIS NOTICE
SAFETY AND MISCELLANEOUS EQUIPMENT

For tank lining work it is recommended that the operator provide himself with clean coveralls and rubber soled shoes and observe good personal hygiene. Certain personnel may be sensitive to various types of resins which may cause dermatitis.

THE SOLVENT IN THIS COATING IS FLAMMABLE AND CARE AS DEMANDED BY GOOD PRACTICE, OSHA, STATE AND LOCAL SAFETY CODES, ETC. MUST BE FOLLOWED CLOSELY. Keep away from heat, sparks, and open flame and use necessary safety equipment such as air mask, explosion-proof electrical equipment, non-sparking tools and ladders, etc. Avoid contact with skin and breathing of vapor or spray mist. When working in tanks, rooms, and other enclosed spaces adequate ventilation must be provided. Refer to Plasite Bulletin PA-3. Keep out of the reach of children.

The catalyst or curing agent is relatively stable at room temperatures but must be protected from contamination, heat and fire and is classified by the Interstate Commerce Commission as an "oxidizing material." Subsequently, all shipping containers bear a yellow caution label. The catalyst is highly irritating if it gets into the eyes. Immediately rinse eyes thoroughly with water and get medical attention. The catalyst also can be a skin irritant and should be removed with large quantities of soap and water. Since this is an oxidizing material, it should not be allowed to accumulate or remain in soaked rags or clothing.

CAUTION - Read and follow all caution statements on this data sheet, material safety data sheet and container label for this product.

April 2006 replaces September 2004

To the best of our knowledge the technical data contained herein is true and accurate on the date of publication and is subject to change without prior notice. User must contact Carboline Company to verify correctness before specifying or ordering. No guarantee of accuracy is given or implied. We guarantee our products to conform to Carboline quality control. We assume no responsibility for coverage, performance or injuries resulting from use. Liability, if any, is limited to replacement of products. NO OTHER WARRANTY OR GUARANTEE OF ANY KIND IS MADE BY CARBOLINE, EXPRESS OR IMPLIED, STATUTORY, BY OPERATION OF LAW, OR OTHERWISE, INCLUDING MERCHANTABILITY AND FITNESS FOR A PARTICULAR PURPOSE. Carboline® and Plasite® are registered trademarks of Carboline Company.

350 Hanley Industrial Court, St. Louis, MO 63144-1599
314/644-1000 314/644-4617 (fax) www.carboline.com

An RPM Company

April 2006 replaces September 2004

To the best of our knowledge the technical data contained herein is true and accurate on the date of publication and is subject to change without prior notice. User must contact Carboline Company to verify correctness before specifying or ordering. No guarantee of accuracy is given or implied. We guarantee our products to conform to Carboline quality control. We assume no responsibility for coverage, performance or injuries resulting from use. Liability, if any, is limited to replacement of products. NO OTHER WARRANTY OR GUARANTEE OF ANY KIND IS MADE BY CARBOLINE, EXPRESS OR IMPLIED, STATUTORY, BY OPERATION OF LAW, OR OTHERWISE, INCLUDING MERCHANTABILITY AND FITNESS FOR A PARTICULAR PURPOSE. Carboline® and Plasite® are registered trademarks of Carboline Company.

1.0 SCOPE OF WORK

The Supplier shall furnish and apply all lining materials in accordance with this specification and all referenced documents, standards and codes.

In the event that the equipment described in this specification are beyond the normal scope of the supplier, the supplier shall submit in writing exceptions to such items for approval by CCC.

2.0 DEFINITIONS

2.1 Calgon Carbon Corporation "CCC" shall refer to all staff, subcontractors, and / or subsidiaries of Calgon Carbon Corporation.

2.2 "Supplier" shall refer to the vendor, manufacturer, or supplier of the materials specified.

3.0 WORK INCLUDED

3.1 Procurement, preparation, application, testing, packaging and delivery.

4.0 WORK EXCLUDED

4.1 Receipt, off-loading, and storage of the equipment at the plant site.

4.2 Field assembly and installation of the equipment.

5.0 PREPARATION FOR SHIPMENT

5.1 All equipment shall be cleaned prior to shipment.

5.2 Flange faces and other machined surfaces shall be protected from damage during shipment and handling by plastic/wooden covers, wooden blocks or other suitable means.

5.3 The supplier shall be responsible for all necessary bracing, cradles, blocking, etc. deemed necessary to prevent damage of the equipment during shipment and handling. All temporary bracing shall be clearly marked for easy identification.

5.4 Each item shipped shall be marked with the following information:

- CCC's Purchase order number.
- Description of contents.
- Shipping Weight.

PROPRIETARY & CONFIDENTIAL: THIS DOCUMENT AND DESIGN DETAILS ARE THE PROPERTY OF CALGON CARBON CORPORATION AND ARE NOT TO BE REPRODUCED IN WHOLE OR PART, NOR EMPLOYED FOR ANY PURPOSE OTHER THAN SPECIFICALLY PERMITTED IN WRITING BY CALGON CARBON CORPORATION. THIS DOCUMENT IS LOANED AND SUBJECT TO RETURN ON DEMAND.

MATERIAL CLASSIFICATION: **RS100**

SPRAY LINER

1.0 Application Standards

- ANSI / NSF - Standard 61: Drinking Water System Components - Health Effects.
- SSPC-SP NO. 10 / NACE NO. 2 – Near-White Blast Cleaning.

2.0 Epoxy Coating

2.1. Manufacturer: Sherwin Williams Tank Clad HS coating, or equal – NSF/ANSI 61 and AWWA C210 approved material.

3.0 Preparation and Application

3.1. Per manufacturers' recommendation.

3.2. The shop shall observe safe practices and standards when spray coating with material used.

4.0 Quality

4.1 Dry Film Thickness must be in accordance with the manufacturer's recommendation. Depending on the pipe diameter, contractor shall take reasonable random DFT readings to insure minimum thickness has been satisfied.

4.2 Lining is to be commercially continuous, no visible light or missed areas, no sags or runs will be acceptable.

5.0 The following documentation shall be submitted:

- Coating Material Lot numbers and NSF written approval for lining in this application.
- MSDS shall be submitted for record.
- Testing / quality documents as required.

PROPRIETARY & CONFIDENTIAL: THIS DOCUMENT AND DESIGN DETAILS ARE THE PROPERTY OF CALGON CARBON CORPORATION AND ARE NOT TO BE REPRODUCED IN WHOLE OR PART, NOR EMPLOYED FOR ANY PURPOSE OTHER THAN SPECIFICALLY PERMITTED IN WRITING BY CALGON CARBON CORPORATION. THIS DOCUMENT IS LOANED AND SUBJECT TO RETURN ON DEMAND.

Industrial & Marine Coatings

Certified to NSF/ANSI 61

TRM 15

TANK CLAD HS

PART A	B62W80	SANITARY WHITE
PART A	B62L80	LIGHT BLUE
PART B	B60V80	STANDARD HARDENER
PART B	B60V85	LOW TEMP HARDENER

PRODUCT INFORMATION

Revised 7/06

PRODUCT DESCRIPTION

TANK CLAD HS is a VOC compliant, 80% solids epoxy coating formulated as an interior lining for pipes and tanks containing potable water, fresh water, salt water, and other commodities. May also be used as part of a system for tank exteriors.

RECOMMENDED USES

Lining system for the interior of steel tanks and concrete reservoirs used for potable water. Meets requirements of AWWA C210 for coating systems for the interior and exterior of steel water pipelines. Meets NSF Standard 61 requirements for use in potable water storage tanks:

- 60,000 gallons and larger tanks with standard hardener
- 1,000 gallons and larger tank with low temp hardener
- 8" or greater pipe with low temp hardener

Acceptable for use with cathodic protection systems.

Conforms to AWWA D102-03 ICS #,1 #2,#3, and #5.***
***Refer to respective System

PRODUCT CHARACTERISTICS

Finish: Semi-gloss

Color: Sanitary White, Light Blue

Volume Solids: 80% ± 2%, mixed

Weight Solids: 90% ± 2%, mixed

VOC (EPA Method 24): Unreduced <200 g/L; 1.67 lb/gal
mixed Reduced 10%: <240 g/L; 2.00 lb/gal

Mix Ratio: 2 component, premeasured 4:1

Recommended Spreading Rate per coat:

	Standard	AWWA
Wet mils:	6.0 - 10.0	3.75 -7.5
Dry mils:	5.0 - 8.0*	3.0 - 6.0*
Coverage:	160 - 255 sq ft/gal approximate	213 - 426

NOTE: Brush or roll application may require multiple coats to achieve maximum film thickness and uniformity of appearance.
* See recommended systems on reverse side

Drying Schedule @ 10.0 mils wet @ 50% RH:
Standard Hardener (B60V80)

	@ 55°F	@ 77°F	@ 120°F
To touch:	7 hours	3 hours	1 hour
Tack free:	8 hours	4 hours	2 hours
To recoat:			
minimum:	48 hours	18 hours	4 hours
maximum:	60 days	60 days	60 days
To cure:	14 days	7 days	3 days
Pot Life:	4 hours	2 hours	30 minutes
Sweat-in Time:	30 minutes	15 minutes	Not required

Low Temp Hardener (B60V85)*

	@ 40°F	@ 77°F
To touch:	24 hours	2 hours
Tack free:	48 hours	2-1/2 hours
To recoat:		
minimum:	48 hours	8 hours
maximum:	30 days	14 days
To cure:	10 days	5 days
Pot Life:	2 hours	30 minutes
Sweat-in Time:	10 minutes	None

***Do not use Tank Clad HS Low Temp Hardener above 80°F.**

If maximum recoat time is exceeded, abrade surface before recoating. Drying time is temperature, humidity, and film thickness dependent.

For **Potable Water Service,** allow a minimum cure time of 7 days @ 77°F (5 days with low temp hardener) prior to placing into service, sterilize and thoroughly rinse with potable water. Per AWWA C652.

Shelf Life: 36 months, unopened
Store indoors at 40°F to 100°F

Flash Point: 80°F, PMCC, mixed

Reducer/Clean Up: Xylene, R2K4

PERFORMANCE CHARACTERISTICS

System Tested: (unless otherwise indicated)
Substrate: Steel
Surface Preparation: SSPC-SP10/NACE 2
2 cts. Tank Clad HS @ 6.0 mils dft/ct

Abrasion Resistance:
Method: ASTM D4060, CS17 wheel, 1000 cycles, 1 kg load
Result: 120 mg loss

Adhesion:
Method: ASTM D4541
Result: 1000 psi

Direct Impact Resistance: (on cold rolled steel)
Method: ASTM G14
Result: 30 in. lbs.

Dry Heat Resistance:
Method: ASTM D2485 (discolors)
Result: 200°F

Flexibility: (on cold rolled steel)
Method: ASTM D522, 180° bend, 1" mandrel
Result: Passes

Moisture Condensation Resistance:
Method: ASTM D4585, 100°F, 1000 hours
Result: No blistering, underfilm corrosion, or rust creepage observed

Pencil Hardness:
Method: ASTM D3363
Result: 4H

Salt Fog Resistance:
Method: ASTM B117, 1000 hours
Result: No blistering, underfilm corrosion, or rust creepage observed.

Epoxy coatings may darken or yellow following application and curing.

continued on back

Industrial & Marine Coatings

Certified to NSF/ANSI 61

TRM 15

TANK CLAD HS

PART A	B62W80	SANITARY WHITE
PART A	B62L80	LIGHT BLUE
PART B	B60V80	HARDENER
PART B	B60V85	LOW TEMP HARDENER

PRODUCT INFORMATION

RECOMMENDED SYSTEMS

Immersion, *Steel

***AWWA D102: Inside Coating System No. 1**
(minimum AWWA DFT 8.0 mils)
1 ct. Tank Clad HS @ 3.0 mils dft
1 ct. Tank Clad HS @ 5.0 mils dft

***AWWA D102: Inside Coating System No. 2**
(minimum AWWA DFT 12.0 mils)
1 ct. Tank Clad HS @ 3.0 mils dft
1 ct. Tank Clad HS @ 4.0 mils dft
1 ct. Tank Clad HS @ 5.0 mils dft

***AWWA D102: Inside Coating System No. 3**
(minimum AWWA DFT 10.0 mils)
1 ct. Zinc Clad II LV or Plus @ 2.0 mils dft
1 ct. Tank Clad HS @ 3.0 mils dft
1 ct. Tank Clad HS @ 5.0 mils dft

***AWWA D102: Inside Coating System No. 5**
(minimum AWWA DFT 10.0 mils)
1 ct. Corothane I – Galvapac NSF @ 2.0 mils dft
1 ct. Tank Clad HS @ 4.0 mils dft
1 ct. Tank Clad HS @ 4.0 mils dft

Atmospheric, steel:

***AWWA D102: Outside Coating System No. 5**
(minimum AWWA DFT 6.0 mils)
1 ct. Tank Clad HS @ 2.0 mils dft
1 ct. Tank Clad HS @ 2.0 mils dft
1 ct Acrolon 218HS @ 2.0 mils dft

***AWWA D102: Outside Coating System No. 6**
(minimum AWWA DFT 6.0 mils)
1 ct. Corothane I – Galvapac NSF @ 2.0 mils dft
1 ct. Tank Clad HS @ 2.0 mils dft
1 ct Acrolon 218HS @ 2.0 mils dft

Concrete/ Masonry- Smooth
2 cts. Tank Clad HS @ 5.0 - 8.0 mils dft/ct

The systems listed above are representative of the product's use. Other systems may be appropriate. Also suitable for Ductille Iron, Aluminum, and Galvanized surfaces.

SURFACE PREPARATION

Surface must be clean, dry, and in sound condition. Remove all oil, dust, grease, dirt, loose rust, and other foreign material to ensure adequate adhesion.

Refer to product Application Bulletin for detailed surface preparation information.

Minimum recommended surface preparation:
Iron & Steel:
Atmospheric: SSPC-SP6/NACE 3
Immersion: SSPC-SP10/NACE 2, 2-3 mil profile

Concrete & Masonry:
Immersion: SSPC-SP 13/NACS 6-4.3.1 or 4.3.2, or ICRI 03732, CSP 2-3

TINTING

Do not tint.

APPLICATION CONDITIONS

Temperature: 55°F minimum, 120°F maximum (air, surface, and material)
At least 5°F above dew point
Relative humidity: 85% maximum

Do not use Low Temp Hardener (B60V85) above 80°F.

Refer to product Application Bulletin for detailed application information.

ORDERING INFORMATION

Packaging: 5 gallons mixed
Part A: 4 gallons in a 5 gallon container
Part B: 1 gallon

Weight per gallon: 14.4 ± 0.2 lb, mixed

SAFETY PRECAUTIONS

Refer to the MSDS sheet before use.

DISCLAIMER

The information and recommendations set forth in this Product Data Sheet are based upon tests conducted by or on behalf of The Sherwin-Williams Company. Such information and recommendations set forth herein are subject to change and pertain to the product offered at the time of publication. Consult your Sherwin-Williams representative to obtain the most recent Product Data Information and Application Bulletin.

WARRANTY

The Sherwin-Williams Company warrants our products to be free of manufacturing defects in accord with applicable Sherwin-Williams quality control procedures. Liability for products proven defective, if any, is limited to replacement of the defective product or the refund of the purchase price paid for the defective product as determined by Sherwin-Williams. NO OTHER WARRANTY OR GUARANTEE OF ANY KIND IS MADE BY SHERWIN-WILLIAMS, EXPRESSED OR IMPLIED, STATUTORY, BY OPERATION OF LAW OR OTHERWISE, INCLUDING MERCHANTABILITY AND FITNESS FOR A PARTICULAR PURPOSE.

Industrial & Marine Coatings

NSF®

Certified to NSF/ANSI 61

TRM15A

TANK CLAD HS

PART A	B62W80	SANITARY WHITE
PART A	B62L80	LIGHT BLUE
PART B	B60V80	STANDARD HARDENER
PART B	B60V85	LOW TEMP HARDENER

APPLICATION BULLETIN

Revised 7/06

SURFACE PREPARATION

Surface must be clean, dry, and in sound condition. Remove all oil, dust, grease, dirt, loose rust, and other foreign material to ensure adequate adhesion.

Carbon Steel, Immersion Service:
Clean and degrease the surface prior to abrasive blasting per SSPC-SP 1 Solvent Cleaning. Methods described in SSPC-SP 1 include solvents, alkali, detergent/water, emulsions, and steam. The surface shall be abrasive blasted to SSPC-SP10/NACE No. 2 Near-White Blast Cleaning with a 2 - 3 mil profile. The anchor pattern shall be sharp with no evidence of a polished surface. The finished surface shall be free of all visible oil, grease, dust, dirt, mill scale, rust, coating, oxides, corrosion products, and other foreign matter with no more than 5% staining. After blasting, all dust and loose residue should be removed from the surface by acceptable means. Coat steel the same day as it is prepared and prior to the formation of rust.

Iron & Steel, Atmospheric Service:
Minimum surface preparation is Hand Tool Clean per SSPC-SP2. Remove all oil and grease from surface by Solvent Cleaning per SSPC-SP1. For better performance, use Commercial Blast Cleaning per SSPC-SP6/NACE 3, blast clean all surfaces using a sharp, angular abrasive for optimum surface profile (2 mils). Prime any bare steel within 8 hours or before flash rusting occurs.

Ductile Iron, Immersion Service:
Refer to National Association of Pipe Fabricators Surface Preparations Standard NAPF 500-03 as follows:

a. NAPF 500-03-01 "Solvent Cleaning"
b. NAPF 500-03-02 "Hand Tool Cleaning"
c. NAPF 500-03-03 "Power Tool Cleaning"
d. NAPF 500-03-04 "Abrasive Blast Cleaning of Ductile Iron Pipe".

Concrete and Masonry, Immersion Service:
Decontamination of the concrete surface requires the removal of oils, grease, wax, fatty acids and other contaminants and may be accomplished by the use of detergent scrubbing with a Sherwin-Williams cleaner and degreaser, low pressure water cleaning (less than 5,000 psi), steam cleaning, or chemical cleaning.The preferred methods for creating a surface profile, including the removal of dirt, dust, laitance and curing compounds, is abrasive blasting or scarifying to achieve an ICRI surface equivalent to CSP1-3. See ICRI Technical Guideline No. 03732 for additional information.

Previously Painted Surfaces:
If in sound condition, clean the surface of all foreign material. Scarify the surface to create the desired surface profile. Apply coatings on a test area, allowing paint to dry one week before testing adhesion. If adhesion is poor, or if this product attacks the previous finish, removal of the previous coating may be necessary.

APPLICATION CONDITIONS

Temperature:	55°F minimum, 120°F maximum (air, surface, and material) At least 5°F above dew point
Relative humidity:	85% maximum

Do not use Low Temp Hardener (B60V85) above 80° F

APPLICATION EQUIPMENT

The following is a guide. Changes in pressures and tip sizes may be needed for proper spray characteristics. Always purge spray equipment before use with listed reducer. Any reduction must be compliant with existing VOC regulations and compatible with the existing environmental and application conditions.

Reducer/Clean up ..... Xylene, R2K4
Use of any other solvent than Xylene, R2K4 may affect the performance or compliance of this product for its intended service.

Airless Spray
Pump ..... 45:1 minimum
Pressure ..... 3600 psi minimum
Hose ..... 3/8" ID
Tip ..... .017" - .019"
Filter ..... 30 mesh
Reduction ..... As needed up to 10% by volume

Brush
Brush ..... Natural Bristle
Reduction ..... Not recommended

Roller
Cover ..... 3/8" - 1/2" woven with phenolic core
Reduction ..... Not recommended

Recommended Spreading Rate per coat:

	Standard	AWWA
Wet mils:	6.0 - 10.0	3.75 -7.5
Dry mils:	5.0 - 8.0*	3.0 - 6.0*
Coverage:	160 - 255 sq ft/gal approximate	213 - 426

* See recommended systems on Product Information Page

If specific application equipment is not listed above, equivalent equipment may be substituted.

continued on back

Industrial & Marine Coatings

Certified to NSF/ANSI 61

TRM 15

TANK CLAD HS

PART A	B62W80	SANITARY WHITE
PART A	B62L80	LIGHT BLUE
PART B	B60V80	HARDENER
PART B	B60V85	LOW TEMP HARDENER

APPLICATION BULLETIN

APPLICATION PROCEDURES

Surface preparation must be completed as indicated.

Mix contents of each component thoroughly with power agitation. Make certain no pigment remains on the bottom of the can. Then combine four parts by volume of Part A with one part by volume of Part B. Thoroughly agitate the mixture with power agitation. Allow the material to sweat-in as indicated. Re-stir before using.

If reducer solvent is used, add only after both components have been thoroughly mixed, after sweat-in.

Apply paint to the recommended film thickness and spreading rate as indicated below:

Recommended Spreading Rate per coat:

	Standard	AWWA
Wet mils:	6.0 - 10.0	3.75 -7.5
Dry mils:	5.0 - 8.0*	3.0 - 6.0*
Coverage:	160 - 255 sq ft/gal approximate	213 - 426

NOTE: Brush or roll application may require multiple coats to achieve maximum film thickness and uniformity of appearance.
* See recommended systems on product information page

Drying Schedule @ 10.0 mils wet @ 50% RH:
Standard Hardener (B60V80)

	@ 55°F	@ 77°F	@ 120°F
To touch:	7 hours	3 hours	1 hour
Tack free:	8 hours	4 hours	2 hours
To recoat:			
minimum:	48 hours	18 hours	4 hours
maximum:	60 days	60 days	60 days
To cure:	14 days	7 days	3 days
Pot Life:	4 hours	2 hours	30 minutes
Sweat-in Time:	30 minutes	15 minutes	Not required

Low Temp Hardener (B60V85)*

	@ 40°F	@ 77°F
To touch:	24 hours	2 hours
Tack free:	48 hours	2-1/2 hours
To recoat:		
minimum:	48 hours	8 hours
maximum:	30 days	14 days
To cure:	10 days	5 days
Pot Life:	2 hours	30 minutes
Sweat-in Time:	10 minutes	None

***Do not use Tank Clad HS Low Temp Hardener above 80°F.**

If maximum recoat time is exceeded, abrade surface before recoating. Drying time is temperature, humidity, and film thickness dependent.

For **Potable Water Service,** allow a minimum cure time of 7 days @ 77°F (5 days for low temp hardener) prior to placing into service, sterilize and thoroughly rinse with potable water. See methods outlined in AWWA C652.

Application of coating above maximum or below minimum recommended spreading rate may adversely affect coating performance.

PERFORMANCE TIPS

Stripe coat all crevices, welds, and sharp angles to prevent early failure in these areas.

When using spray application, use a 50% overlap with each pass of the gun to avoid holidays, bare areas, and pinholes. If necessary, cross spray at a right angle

Spreading rates are calculated on volume solids and do not include an application loss factor due to surface profile, roughness or porosity of the surface, skill and technique of the applicator, method of application, various surface irregularities, material lost during mixing, spillage, overthinning, climatic conditions, and excessive film build.

Excessive reduction of material can affect film build, appearance, NSF 61 approval, and may cause lifting of old paint.

Do not apply the material beyond recommended pot life.

Do not mix previously catalyzed material with new.

In order to avoid blockage of spray equipment, clean equipment before use or before periods of extended downtime with Xylene, R2K4.

Holiday Detection: Use a wet sponge-type detector such as KD Bird Dog or equivalent equipment per manufacturer's recommendation. Test only cured coating, as solvent entrapment in fresh films may provide false readings.

Do not use Low Temp Hardener (B60V85) above 80°F.

Refer to Product Information sheet for additional performance characteristics and properties.

CLEAN UP INSTRUCTIONS

Clean spills and spatters immediately with Xylene, R2K4. Clean tools immediately after use with Xylene, R2K4. Follow manufacturer's safety recommendations when using any solvent.

SAFETY PRECAUTIONS

Refer to the MSDS sheet before use.

DISCLAIMER

The information and recommendations set forth in this Product Data Sheet are based upon tests conducted by or on behalf of The Sherwin-Williams Company. Such information and recommendations set forth herein are subject to change and pertain to the product offered at the time of publication. Consult your Sherwin-Williams representative to obtain the most recent Product Data Information and Application Bulletin.

WARRANTY

The Sherwin-Williams Company warrants our products to be free of manufacturing defects in accord with applicable Sherwin-Williams quality control procedures. Liability for products proven defective, if any, is limited to replacement of the defective product or the refund of the purchase price paid for the defective product as determined by Sherwin-Williams. NO OTHER WARRANTY OR GUARANTEE OF ANY KIND IS MADE BY SHERWIN-WILLIAMS, EXPRESSED OR IMPLIED, STATUTORY, BY OPERATION OF LAW OR OTHERWISE, INCLUDING MERCHANTABILITY AND FITNESS FOR A PARTICULAR PURPOSE.

SPECIFICATION NUMBER: RS17 FOR EPOXY PAINTING

1.0 SCOPE

1.1 This specification covers the minimum procedures required for the surface preparation and coating of equipment that has not been previously painted. It also covers equipment that has been previously painted.

1.2 The work to be performed under this specification consists of painting all metal materials including vessels, supports, base plates, skids, pipe, pipe supports, brackets, hanger rods, pipe clamps, and all other metal surfaces, not mentioned in Section 5.0, that are part of the system.

1.3 The "applicator" referred to in this specification could be Calgon Carbon Corporation or a sub-contractor.

1.4 Unless otherwise specified, the applicator shall furnish all paints and solvents, necessary tools, scaffolds, ladders, compressed air, etc.

1.5 The applicator will familiarize himself with rules and regulations as set forth by the Safety Department of the facility where painting is to be conducted and comply with these regulations.

2.0 SURFACE PREPARATION OF PAINTED SURFACES

2.1 ***Previously coated surfaces that are in good condition:***
Maintenance painting will frequently not permit or require complete removal of all old coatings prior to re-painting. However, all surface contamination such as oil, grease, loose paint, mill scale, dirt, foreign matter, rust, mold mildew, mortar, efflorescence and sealers must be removed to assure sound bonding to the tightly adhering old paint.

In addition, glossy surfaces of old paint films must be clean and dull before re-painting. Thorough washing with an abrasive kitchen cleanser will clean and dull in one operation, or wash thoroughly and dull by sanding. Remove all sanding dust.

It is recommended that water blasting be used (NACE Standard RP-01-72) which removes foreign matter by water (with cleanser) at pressures of 2,000-5,000 PSI at a flow of 4-14 gallons per minute.

The applicator shall recognize that any surface preparation short of total removal of the old coatings may compromise the service length of the new coating system. The applicator shall always check for the compatibility of the previously-painted surface with the new coating by applying a test patch of 2-3 square feet. Allow to dry thoroughly; then check adhesion.

CALGON CARBON CORPORATION ♦ COPYRIGHT 2008 ♦ ALL RIGHTS RESERVED

2.2 ***Previously coated surfaces that are not in good condition:***
The applicator will hand-tool clean the surfaces to remove loose rust, loose mill scale and loose paint to the degree specified by SSPC-SP2-63. The applicator shall accomplish this by hand chipping, scraping, sanding, and wire brushing. The applicator shall further prepare the hand-tool cleaned surface per Paragraph 2.1 above.

3.0 SURFACE PREPARATION OF UNPAINTED SURFACES

3.1 The metal surface shall be free of dirt, rust, rust-proofing, drawing oils and compounds, finger prints, mill scale, and other foreign substances both visible and invisible; thereby improving adhesion and reducing the tendency to blister and corrode on exposure.

3.2 The applicator shall use remove all loose rust and mill scale to the degree specified by SSPC-SP3-63 by power-tool chipping, de-scaling, sanding, wire brushing, grinding, or media blasting as a minimum. SSPC-SP7 Brush-off Blast cleaning is preferred.

4.0 PAINT APPLICATION

4.1 The coating shall be applied in accordance with the manufacturer's instructions.

4.2 The system shall consist of at least one (1) coat of epoxy mastic to a total DFT of 6 nominal mils (acceptable range: 5-7 mils).

4.3 All paint shall be within its expiration date and furnished in unopened containers.

4.4 Thinners shall be used only with the permission of Calgon Carbon Corporation.

4.5 Painting will not be allowed when the relative humidity is above 85% or the temperature is below 55°F without special permission from Calgon Carbon Corporation.

4.6 Any surface that develops rust prior to painting shall be re-prepared per Sections 2.0 or 3.0 above.

5.0 AREAS NOT TO BE PAINTED

5.1 Galvanized steel (new) and PVC pipe are not to be painted.

5.2 Inside of pipes shall not be painted.

5.3 Gauge faces, nameplates, plastic or S/S fittings, flange faces, etc. shall be taped to protect against overspray and tape shall be removed prior to shipping.

5.4 Inside of vessel shall be lined by others.

CALGON CARBON CORPORATION ♦ COPYRIGHT 2008 ♦ ALL RIGHTS RESERVED

6.0 MATERIAL SPECIFICATION

6.1 The paint used shall be Sherwin-Williams Macropoxy HS B58 Series (two-part) Epoxy Coating System, or equal. The manufacturer's specifications are attached and shall be followed along with any recommendations and precautions stated on the paint can label.

Accepted substitutes are:

International Protective Coatings -- Interseal 670
ICI Devoe Coatings -- Devran 224 HS

Other manufacturers may be proposed, but are subject to Calgon Carbon approval prior to use.

6.2 The color shall match Sherwin-Williams MC-71 "Slate Gray" or as specified on the project drawings.

* * *REVISIONS* * *

This specification has been revised as indicated below. The new pages added and/or the existing pages revised are attached as replacements for those previously issued.

REVISION	DATE	BY	PAGE	REMARKS
0	9/8/1989	FRF	All	Issued for Construction
1	1/30/1996	JPM	All	All New Pages; Revised Paragraph 4.1
2	4/15/1996	JPM	1-2-3	Revised Paragraphs 1.3, 2.2, 3.2, 4.1 ,5.3, 6.1 and 6.2
3	6/4/2002	JPM	All	Revised 1.2,1.5,3.2,5.3,6.1,6.2
4	6/08/2007	TAB	3	Revised 6.1 and 6.2
5	4/22/2008	RES	All	General Revision

ISSUED: SEPTEMBER 8, 1989

CALGON CARBON CORPORATION ♦ COPYRIGHT 2008 ♦ ALL RIGHTS RESERVED

CALGON

CALGON CARBON CORPORATION

SECTION 13

SHIPPING SPECIFICATION

SPECIFICATION NUMBER: VS-13

SHIPPING OF STANDARD METAL ADSORBER SYSTEMS

1.0 INTRODUCTION

1.1 The following Calgon Carbon Corporation shipping, and handling instructions are designed to protect the mechanical integrity and the surface finish of the adsorber vessels and/or piping comprising an adsorption system. Proper handling procedures are required to ensure against damage to the new equipment.

1.2 The shipping and handling instructions outlined here are only recommendations and do not relieve any party from full responsibility for proper inspection, handling, shipping preparation, transporting, or unloading of the equipment. Also, the purchaser should be aware that failure to take the precautions outlined here may invalidate the equipment warranty.

2.0 GENERAL HANDLING AND LIFTING INSTRUCTIONS

2.1 Calgon Carbon Corporation equipment is designed with specific locations for lifting and will withstand normal handling procedures. The lifting lugs, shown on the general arrangement installation drawing, are generally located on top of the vessel. Fork tubes are located near the bottom of the equipment.

Refer to the project drawings is required before handling the equipment.

2.2 Normal precautions to follow to prevent equipment damage are as follows:

2.2.1 Operators of hoist equipment must follow proper safety and rigging procedures at all times.

2.2.2 Always lift -- ***NEVER*** roll or slide the vessels or piping.

2.2.3 When moving equipment, do not drop or allow hard impact. Do not allow cables, hooks, or spanner bars to swing against the vessel.

2.2.4 Never allow tools to strike or drop on equipment (especially inside or outside of vessels).

2.2.5 All ladders used inside vessels should have ends protected. They should be wood construction; if not, ladders must have rubber protectors to prevent damaging the lining.

2.2.6 Workmen entering a lined vessel must wear soft-soled shoes, free of grit. Workmen must follow plant and OSHA requirements for confined space entry.

2.2.7 Always make lifting attachments to the lifting lugs when using chains or cables. Never lift from the nozzles.

2.2.8 Never lift a vessel by using any fitting or appurtenance other than the lift lugs. When lift lugs are not provided as part of the equipment, nylon web rigging slings must be used by attachment directly to the corners of the structural frame. It is recommended that the nylon web be protected with rubber pads or sheets to prevent cutting or tearing across the corners.

CALGON CARBON CORPORATION ♦ COPYRIGHT 2008 ♦ ALL RIGHTS RESERVED

3.0 PREPARATION FOR SHIPMENT

3.1 Calgon Carbon Corporation and their representatives are to take reasonable precautions when preparing equipment for shipment. Normally, a flat-bed truck will be used to transport the vessels, pipe rack and piping to the customer. Any hold-down location where a chain or strap contacts a painted surface must be protected with rubber sheeting, carpeting or other similar material.

3.2 Vessel loading will be the responsibility of the fabrication shop. Securing the load on the truck will be the responsibility of the truck driver. Painted surfaces must be protected from damage.

3.3 The pipe rack loading, if supplied, is the responsibility of the fabrication shop. The truck driver is to secure the rack to the truck bed. Points of contact are to be padded to protect the equipment.

3.4 All loose piping is to be loaded in such a manner as to avoid damage to painted surfaces. No chains are to be in direct contact with piping. Padding is to be used. Loading of loose piping will be the responsibility of the fabrication shop. The truck driver is to secure the piping to the truck bed.

4.0 SHIPPING REQUIREMENTS

4.1 Systems are typically shipped on one (1) truck. An additional truck may be required due to specific height or weight restrictions.

4.2 Once the vessels, pipe racks or loose piping are loaded onto a truck, they shall not be unloaded again until they reach their final destination.

4.3 No vessels, pipe racks or loose piping shall be shipped without a complete bill of lading which itemizes all parts. Also, no shipment shall be made without the completed packing list for crated parts which has been initialed by the person who packed and the person doing the checking.

5.0 INSPECTION UPON RECEIPT

5.1 The purchaser should arrange for an inspector or an authorized person at the jobsite to inspect and also supervise the off-loading of the system.

5.2 Check the bill of lading against the equipment received.

5.3 If damage has occurred during transit, it must be noted on the delivery receipt prior to signing acceptance. If damage has occurred, a claim should be filed promptly with the delivery carrier. If excessive damage is found:

- Do not unpack or unload the equipment
- Document the extent of the damage with photographs
- Contact your Calgon Carbon representative

5.4 If no claim is filed, the purchaser accepts all further responsibility for damaged equipment.

5.5 If damage has occurred and is not repaired by Calgon Carbon Corporation prior to the equipment being put into service, the purchaser accepts all future responsibility for the effects of equipment failure resulting from such damage.

CALGON CARBON CORPORATION ♦ COPYRIGHT 2008 ♦ ALL RIGHTS RESERVED

6.0 RECOMMENDED INSPECTION PROCEDURES

The following should be used as a guideline in making an inspection of the equipment prior to unloading.

6.1 The adsorber vessel exterior should be visually examined for damage. Any sign of impacting may result in cracked or flaking of the vessel interior lining. If this damage has occurred, it is required that the manway be opened and the interior lining be visually inspected.

6.2 Check the equipment for any signs of breakage, abrasion, shifting or rotation that may have resulted in damage to the paint on vessels, pipe rack, or loose piping.

6.3 Upon discovering minor or major damage, contact your Calgon Carbon representative to report your findings.

7.0 UNLOADING

7.1 Calgon Carbon Corporation specifically does not assume responsibility for the unloading of vessels, pipe racks or piping. Shipment will be considered complete when the equipment arrives at the jobsite and prior to removal of the equipment from the truck by the purchaser. The presence of Calgon Carbon Corporation representative(s) at the delivery or installation site does not relieve the purchaser of any of his responsibility for proper handling procedures.

7.2 All instructions shown in the Unloading/Foundations Section of the Calgon Carbon Corporation Operation and Maintenance Manual for this equipment shall be followed.

7.3 Vessel and pipe rack unloading shall be accomplished in such a manner as to avoid damage to finished surfaces. Adequate padding may be necessary around the lifting point.

7.4 The use of chains, slings, or a spreader bar is required for hoisting vessels and the pipe rack. The angle between the lifting point and the top of the equipment must always be 60° or greater. Workmen should keep control over the vessel with guidelines.

8.0 INSTALLATION

8.1 All instructions shown in Installation Section of the Calgon Carbon Corporation Operation and Maintenance Manual for this equipment shall be followed.

**** REVISIONS * ****

This specification has been revised as indicated below. The new pages added and/or the existing pages revised are attached as replacements for those previously issued.

REVISION	DATE	BY	PAGE	REMARKS
A	1-15-93	JMcM	All	Issued for Comment
B	5/19/93	JPM	All	Issued for Comment
C	9/1/93	JPM	2-3	Issued for Comment
D	10/12/93	JPM	3	Issued for Comment
E	11/13/07	JSR	All	
F	02/29/2008	RES	All	Modified to include vapor-phase equipment

ISSUED: JANUARY 15, 1993

CALGON CARBON CORPORATION ♦ COPYRIGHT 2008 ♦ ALL RIGHTS RESERVED

CALGON

CALGON CARBON CORPORATION

Section 14

DRAWINGS

SECTION 14

DRAWING INDEX

DRAWING NUMBER	REVISION	TITLE
91075169	D	System Flow Diagram
91075170	B	Resin Systems Flow Diagram
91075171	B	Carbon Systems Flow Diagram
91075162	C	Site Plan
91075161	F	Site General Arrangement
91075163	B	Resin Systems General Arrangement
91075164	B	Carbon Systems General Arrangement
91075172	A	Resin Systems Vessel Arrangement
91075173	A	Carbon Systems Vessel Arrangement
91075174	A	Resin Systems Collection Header
91075175	A	Carbon Systems Collection Header
90060210	0	8” Septa
90060218	0	6” Septa
91085625	A	Control Panel
91085626	A	Junction Box

CALGON CARBON CORPORATION ♦ COPYRIGHT 2009 ♦ ALL RIGHTS RESERVED

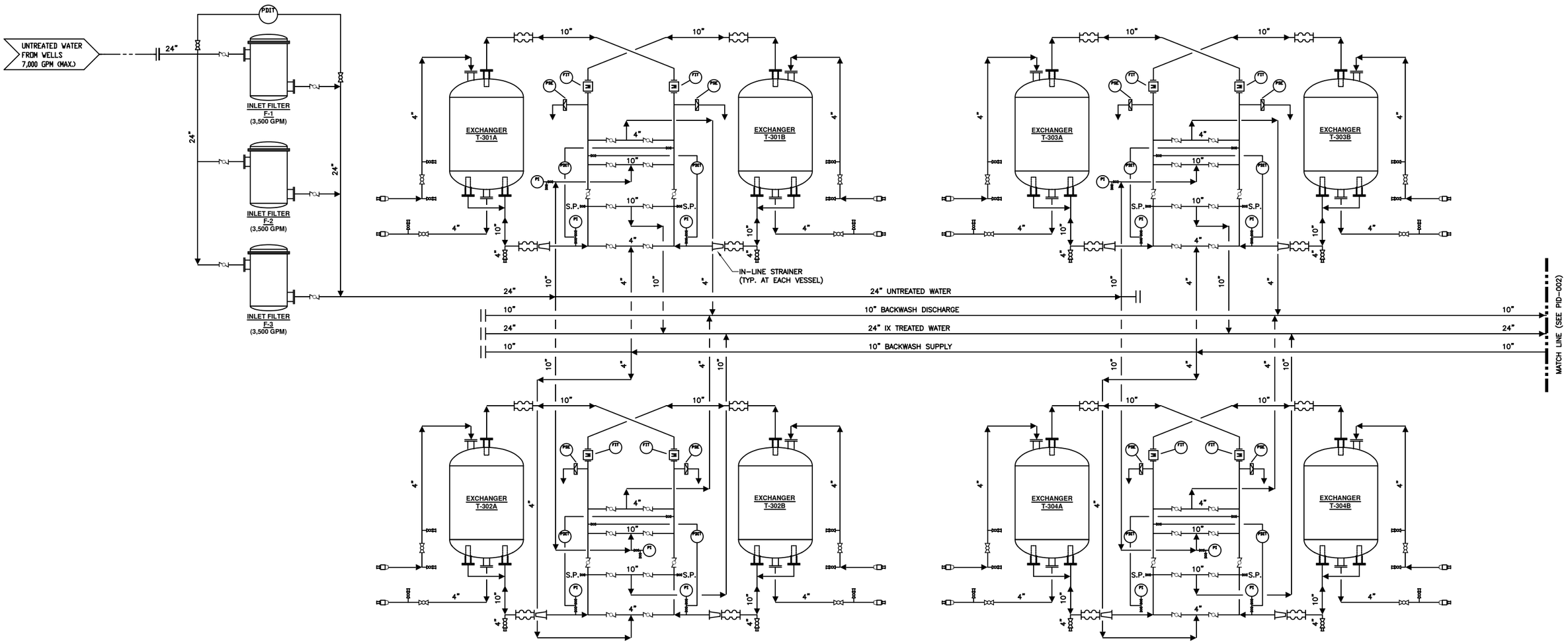

NOTES:
1. ALL CARBON STEEL PIPING TO BE LINED PER CCC SPEC. RS-100.

THIS DRAWING AND DESIGN IS THE PROPERTY OF CALGON CARBON CORPORATION AND IS NOT TO BE REPRODUCED IN WHOLE OR IN PART NOR EMPLOYED FOR ANY PURPOSE OTHER THAN SPECIFICALLY PERMITTED IN WRITING BY CALGON CARBON CORPORATION. THIS DRAWING LOANED SUBJECT TO RETURN ON DEMAND.

	NAME	DATE
DRAFTER	RES	02-27-2008
DESIGNER		
CHECKER		
APPROVAL		
PROJECT No.	IX-08089.MHLL	

REV	DESCRIPTION	APP	DATE
D	ISSUED FOR APPROVAL	RES	1/26/09

REVISIONS

TOLERANCES (unless otherwise specified)

ANGULAR	±0°30'	DECIMAL (2 PLACES)	±.010
FRACTIONAL	±1/16"	DECIMAL (3 PLACES)	±.005
DECIMAL (1 PLACE)	±.015	DECIMAL (4 PLACES)	±.0005

CALGON

CALGON CARBON CORPORATION

CLIENT
MONK HILLS WELLS
PASADENA, CA

TITLE
PERCHLORATE AND VOC REMOVAL
GAC AND IX RESIN
SYSTEM FLOW DIAGRAM

DWG. Size	SHEET No.	SCALE
D	1 OF 2	NONE

DWG. No. 91075169 REV. D

V:\2008\IX-08089.MHLL\Drawings\Process\91075169 System Flow Diagram.dwg Jan 28, 2009 - 12:59pm

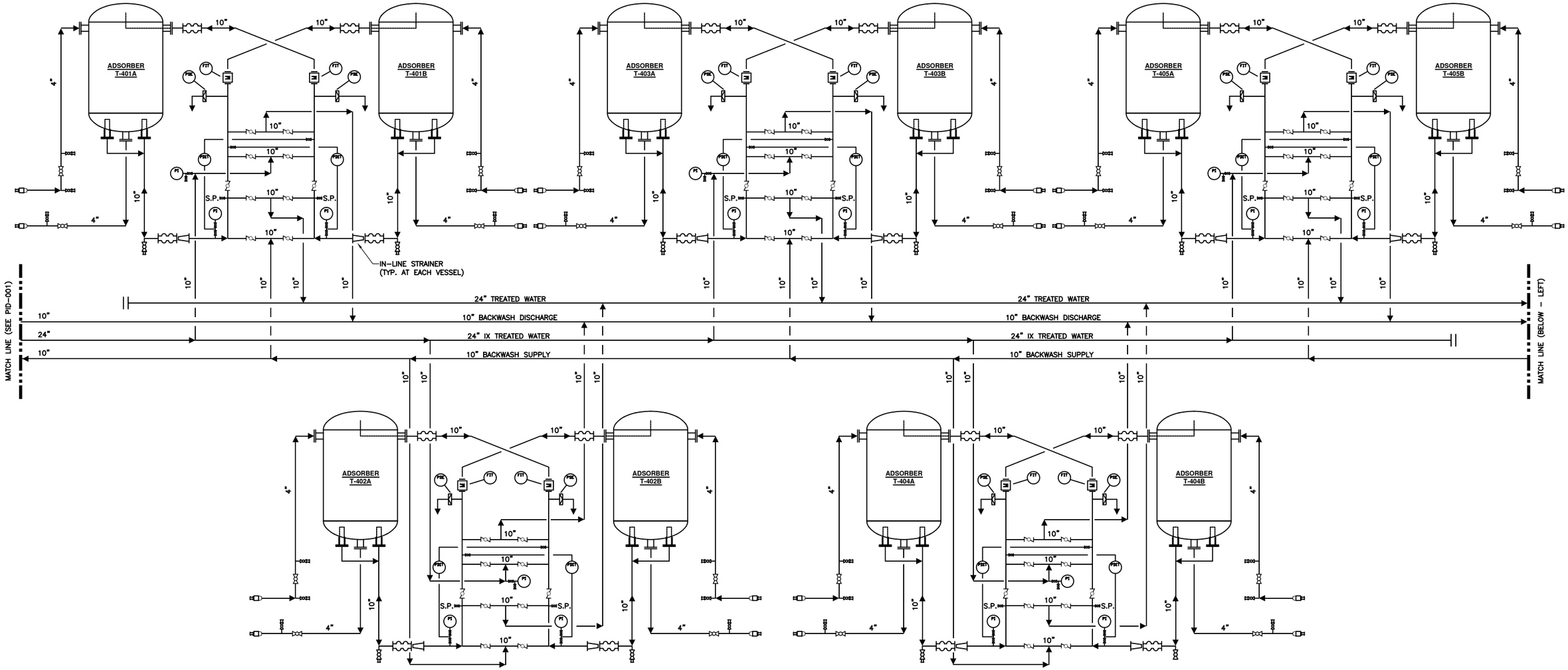

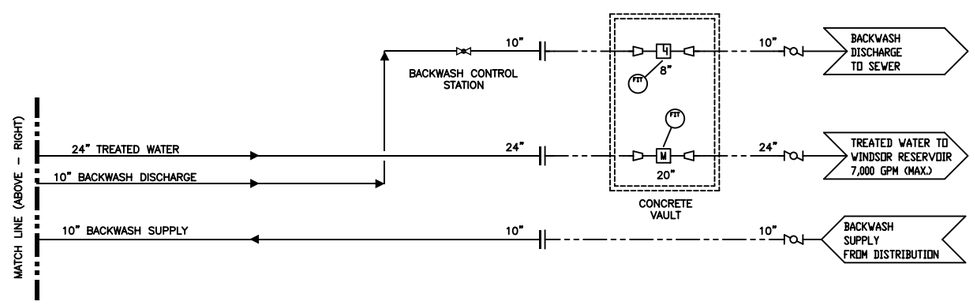

THIS DRAWING AND DESIGN IS THE PROPERTY OF CALGON CARBON CORPORATION AND IS NOT TO BE REPRODUCED IN WHOLE OR IN PART NOR EMPLOYED FOR ANY PURPOSE OTHER THAN SPECIFICALLY PERMITTED IN WRITING BY CALGON CARBON CORPORATION. THIS DRAWING LOANED SUBJECT TO RETURN ON DEMAND.

	NAME	DATE
DRAFTER	RES	02-27-2008
DESIGNER		
CHECKER		
APPROVAL		
PROJECT No.	IX-08089.MHLL	

REV	DESCRIPTION	APP	DA
D	ISSUED FOR APPROVAL	RES	1/26

REVISIONS

TOLERANCES (unless otherwise specified)

ANGULAR	±0°30'	DECIMAL (2 PLACES)	±.010
FRACTIONAL	±1/16"	DECIMAL (3 PLACES)	±.005
DECIMAL (1 PLACE)	±.015	DECIMAL (4 PLACES)	±.0005

CALGON

CALGON CARBON CORPORATION

CLIENT: MONK HILLS WELLS PASADENA, CA

TITLE: PERCHLORATE AND VOC REMOVAL GAC AND IX RESIN SYSTEM FLOW DIAGRAM

DWG. Size: D | SHEET No.: 2 OF 2 | SCALE: NONE

DWG. No.: 91075169 | REV.: D

V:\2008\IX-08089.MHLL\Drawings\Process\91075169 System Flow Diagram.dwg Jan 28, 2009 - 12:59pm

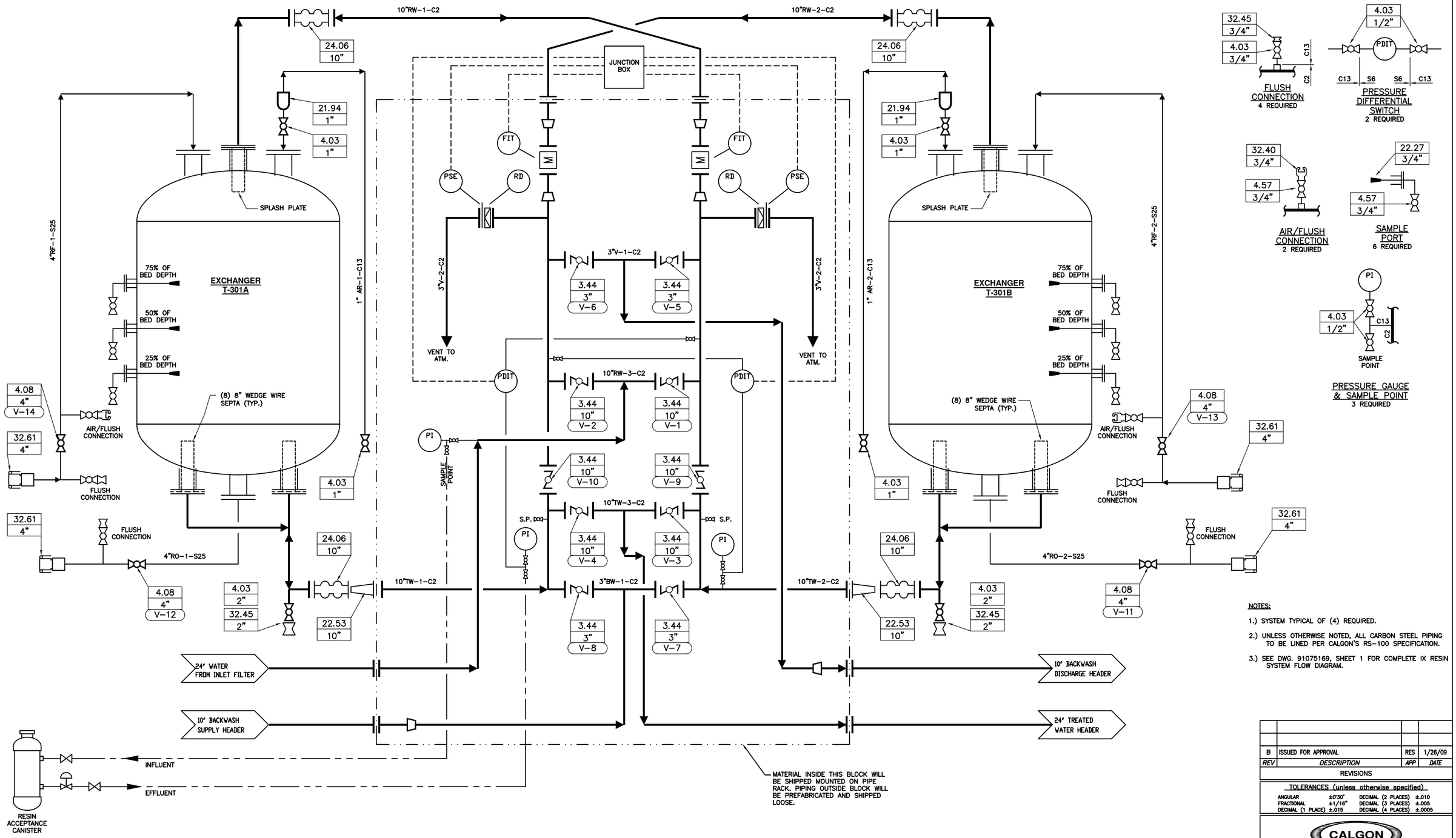

NOTES:

1.) SYSTEM TYPICAL OF (4) REQUIRED.

2.) UNLESS OTHERWISE NOTED, ALL CARBON STEEL PIPING TO BE LINED PER CALGON'S RS-100 SPECIFICATION.

3.) SEE DWG. 91075169, SHEET 1 FOR COMPLETE IX RESIN SYSTEM FLOW DIAGRAM.

MEDIA	INSTRUMENTATION	DESIGN CONDITIONS	LEGEND	ADSORBERS	
MEDIA: CALRES 2109 QUANTITY: 353 CU. FT. PER VESSEL SERVICE: POTABLE	• PI 217 • RD – PSE 577 FOR 125 psig MAX. OPER. PRES. • PSE – BS&B KBA • PDIT – ROSEMOUNT 1151	FLOW RATE – 1750 GPM INFLUENT PRESSURE – 100 PSIG INFLUENT TEMP. – 60° F MAX. BACKFLUSH RATE – 150 GPM MAX.	AR – AIR RELEASE BW – BACKWASH WATER FC – FLUSH CONNECTION RF – RESIN FILL RW – RAW WATER RO – RESIN OUT SP – SAMPLE POINT TW – TREATED WATER V – VENT	12'–0" O.D. x 5'–0" STRAIGHT SIDE ASME 2:1 ELLIPTICAL TOP AND BOTTOM HEADS. CARBON STEEL CONSTRUCTION. ASME SECT. VIII, DIV. 1 W/ PLASITE 4006 LINING FORCE CURED PER NSF 61 CRITERIA 125 PSIG @ 140°F DESIGN.	AIR, CARBON TRANSFER – 100 SCFM @ 30 PSIG MIN. PLANT WATER – 100 GPM @ 30 PSIG MIN. WIRING – MIN. AWG #16 TO PDS 294

THIS DRAWING AND DESIGN IS THE PROPERTY OF CALGON CARBON CORPORATION AND IS NOT TO BE REPRODUCED IN WHOLE OR IN PART NOR EMPLOYED FOR ANY PURPOSE OTHER THAN SPECIFICALLY PERMITTED IN WRITING BY CALGON CARBON CORPORATION. THIS DRAWING LOANED SUBJECT TO RETURN ON DEMAND.

	NAME	DATE
DRAFTER	JGP	07–25–2008
DESIGNER		
CHECKER		
APPROVAL		
PROJECT No.	IX–08089.MHLL	

REV	DESCRIPTION	APP	DATE
B	ISSUED FOR APPROVAL	RES	1/26/09

REVISIONS

TOLERANCES (unless otherwise specified)

ANGULAR	±0°30'	DECIMAL (2 PLACES)	±.010
FRACTIONAL	±1/16"	DECIMAL (3 PLACES)	±.005
DECIMAL (1 PLACE)	±.015	DECIMAL (4 PLACES)	±.0005

CALGON

CALGON CARBON CORPORATION

CLIENT: MONK HILLS WELLS PASADENA, CA

TITLE: PERCHLORATE REMOVAL ION EXCHANGE RESIN SYSTEM FLOW DIAGRAM

DWG. Size: D | SHEET No.: 1 OF 1 | SCALE: NONE

DWG. No.: 91075170 | REV.: B

V:\2008\IX-08089.MHLL\Drawings\Process\91075170 IX System Flow Diagram.dwg Jan 28, 2009 - 2:00pm

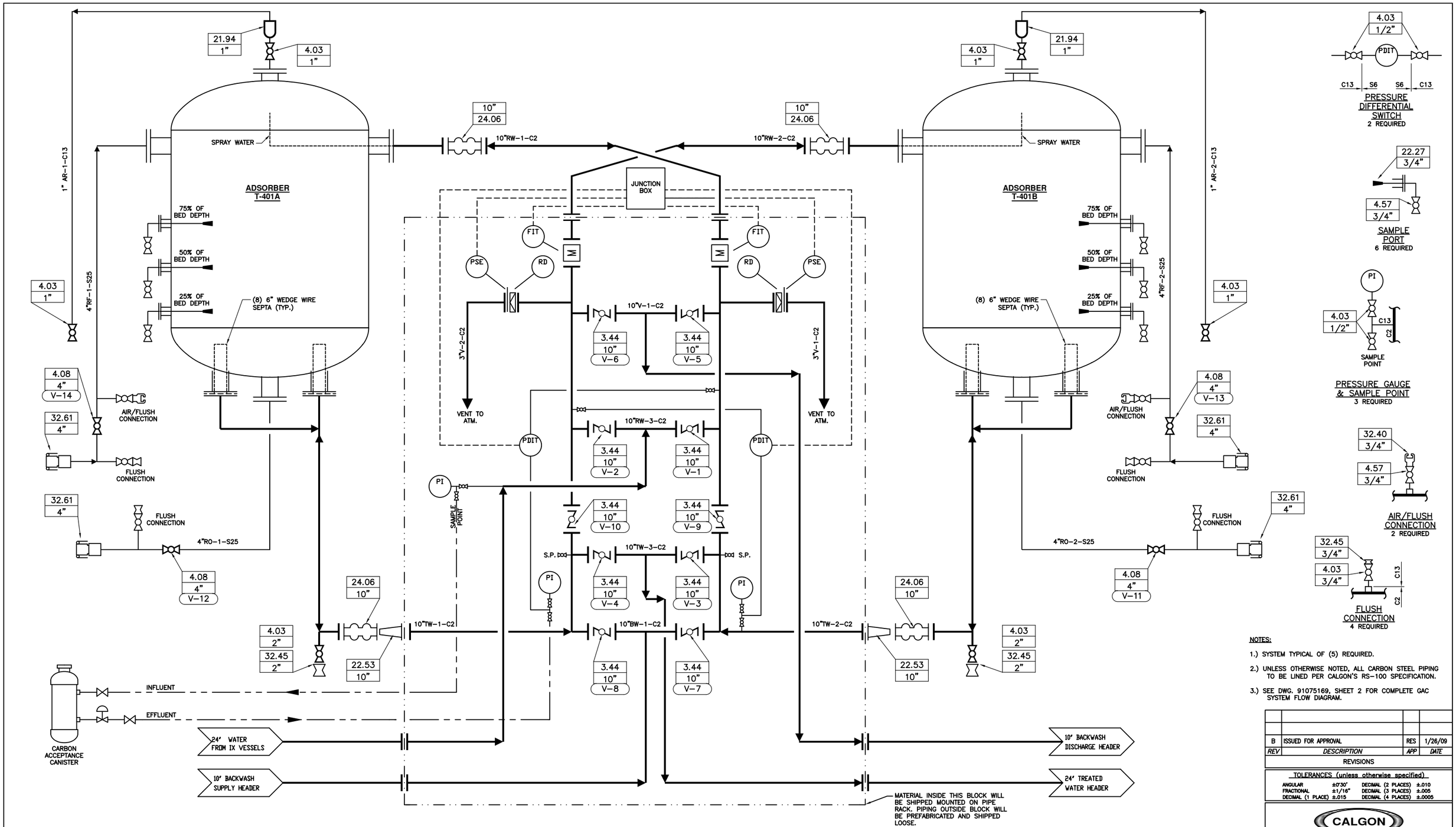

NOTES:

1.) SYSTEM TYPICAL OF (5) REQUIRED.

2.) UNLESS OTHERWISE NOTED, ALL CARBON STEEL PIPING TO BE LINED PER CALGON'S RS-100 SPECIFICATION.

3.) SEE DWG. 91075169, SHEET 2 FOR COMPLETE GAC SYSTEM FLOW DIAGRAM.

REV	DESCRIPTION	APP	DATE
B	ISSUED FOR APPROVAL	RES	1/26/09

REVISIONS

TOLERANCES (unless otherwise specified)

ANGULAR	±0°30'	DECIMAL (2 PLACES)	±.010
FRACTIONAL	±1/16"	DECIMAL (3 PLACES)	±.005
DECIMAL (1 PLACE)	±.015	DECIMAL (4 PLACES)	±.0005

MEDIA	INSTRUMENTATION	DESIGN CONDITIONS	LEGEND	ADSORBERS	
MEDIA: F-300 QUANTITY: 40,000 LB.S/1,335 CU. FT. PER VESSEL SERVICE: POTABLE	• PI 217 • RD – PSE 577 FOR 125 psig MAX. OPER. PRESS. • PSE – BS&B KBA • PDIT – ROSEMOUNT 1151	FLOW RATE – 1400 GPM INFLUENT PRESSURE – PSIG INFLUENT TEMP. – 60° F MAX. BACKFLUSH RATE – 1700 GPM MAX.	AR – AIR RELEASE BW – BACKWASH WATER FC – FLUSH CONNECTION RF – RESIN FILL RW – RAW WATER RO – RESIN OUT SP – SAMPLE POINT TW – TREATED WATER V – VENT	12'-0" O.D. x 14'-0" STRAIGHT SIDE ASME 2:1 ELLIPTICAL TOP AND BOTTOM HEADS. CARBON STEEL CONSTRUCTION. ASME SECT. VIII, DIV. 1 W/ PLASITE 4006 LINING FORCED CURED PER NSF 61 CRITERIA 125 PSIG @ 140°F DESIGN.	AIR, CARBON TRANSFER – 100 SCFM @ 30 PSIG MIN. PLANT WATER – 100 GPM @ 30 PSIG MIN. WIRING – MIN. AWG #16 TO PDS 294

THIS DRAWING AND DESIGN IS THE PROPERTY OF CALGON CARBON CORPORATION AND IS NOT TO BE REPRODUCED IN WHOLE OR IN PART NOR EMPLOYED FOR ANY PURPOSE OTHER THAN SPECIFICALLY PERMITTED IN WRITING BY CALGON CARBON CORPORATION. THIS DRAWING LOANED SUBJECT TO RETURN ON DEMAND.

	NAME	DATE
DRAFTER	JGP	07-25-2008
DESIGNER		
CHECKER		
APPROVAL		
PROJECT No.	IX-08089.MHLL	

CALGON

CALGON CARBON CORPORATION

CLIENT: MONK HILLS WELLS PASADENA, CA

TITLE: V.O.C. REMOVAL GRANULAR ACTIVATED CARBON SYSTEM FLOW DIAGRAM

DWG. Size: D | SHEET No.: 1 OF 1 | SCALE: NONE

DWG. No.: 91075171 | REV.: B

V:\2008\IX-08089.MHLL\Drawings\Process\91075171 GAC System Flow Diagram.dwg Jan 28, 2009 - 2:02pm

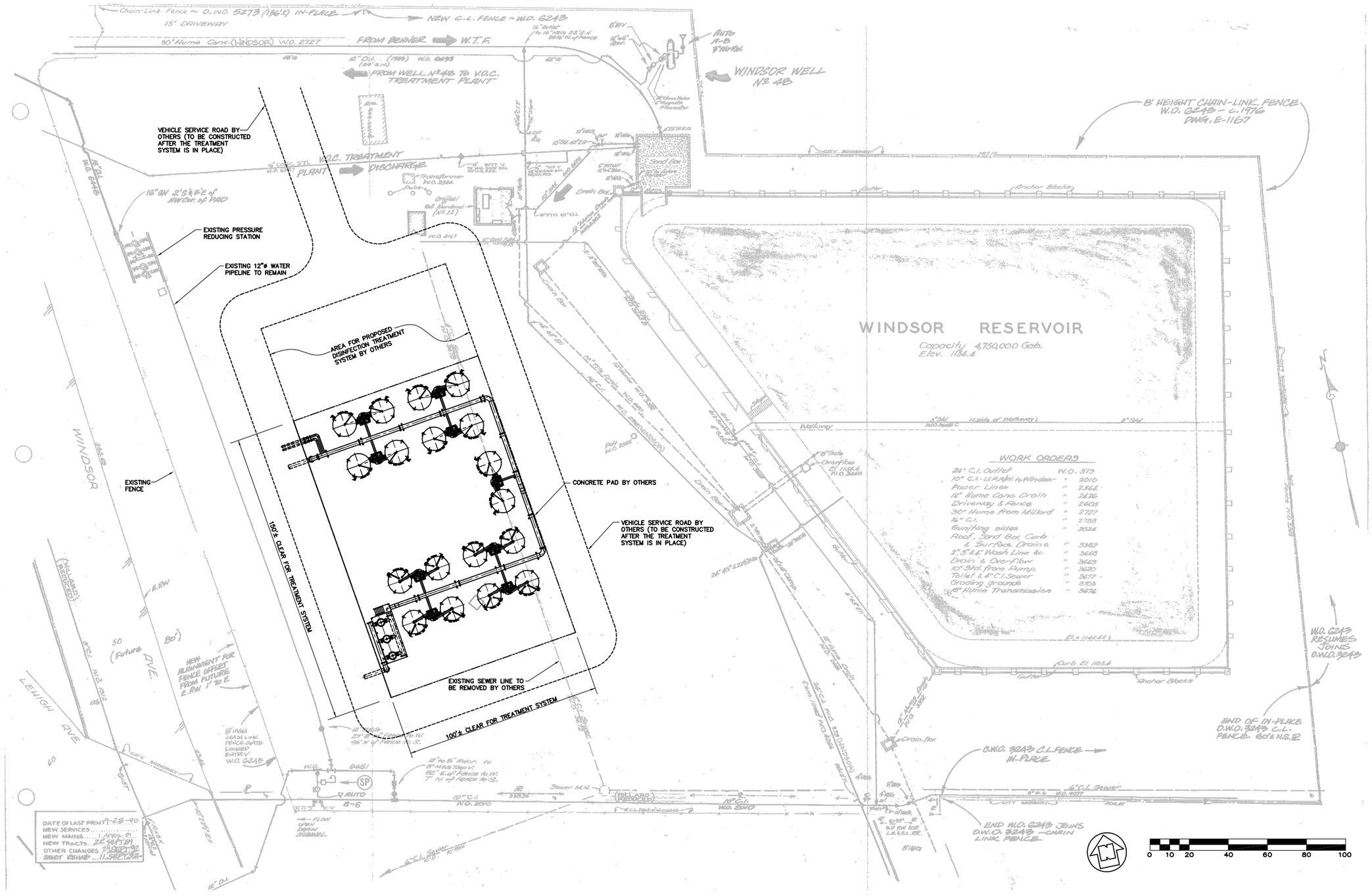

PLAN

REV	DESCRIPTION	APP	DATE
C	ISSUED FOR APPROVAL	RES	1/26/09

REVISIONS

TOLERANCES (unless otherwise specified)

ANGULAR	±0°30'	DECIMAL (2 PLACES)	±.010
FRACTIONAL	±1/16"	DECIMAL (3 PLACES)	±.005
DECIMAL (1 PLACE)	±.015	DECIMAL (4 PLACES)	±.0005

THIS DRAWING AND DESIGN IS THE PROPERTY OF CALGON CARBON CORPORATION AND IS NOT TO BE REPRODUCED IN WHOLE OR IN PART NOR EMPLOYED FOR ANY PURPOSE OTHER THAN SPECIFICALLY PERMITTED IN WRITING BY CALGON CARBON CORPORATION. THIS DRAWING LOANED SUBJECT TO RETURN ON DEMAND.

	NAME	DATE
DRAFTER	RES	7/12/2007
DESIGNER		
CHECKER		
APPROVAL		
PROJECT No.	IX-08089.MHLL	

CALGON

CALGON CARBON CORPORATION

CLIENT: MONK HILLS WELLS PASADENA, CA

TITLE: PERCHLORATE AND VOC REMOVAL GAC AND IX RESIN SITE PLAN

DWG. Size: D | SHEET No.: 1 OF 1 | SCALE: NONE

DWG. No.: 91075162 | REV.: C

V:\2008\IX-08089.MHLL\Drawings\General Arrangements\91075162 Site Plan.dwg Jan 26, 2009 - 2:41pm

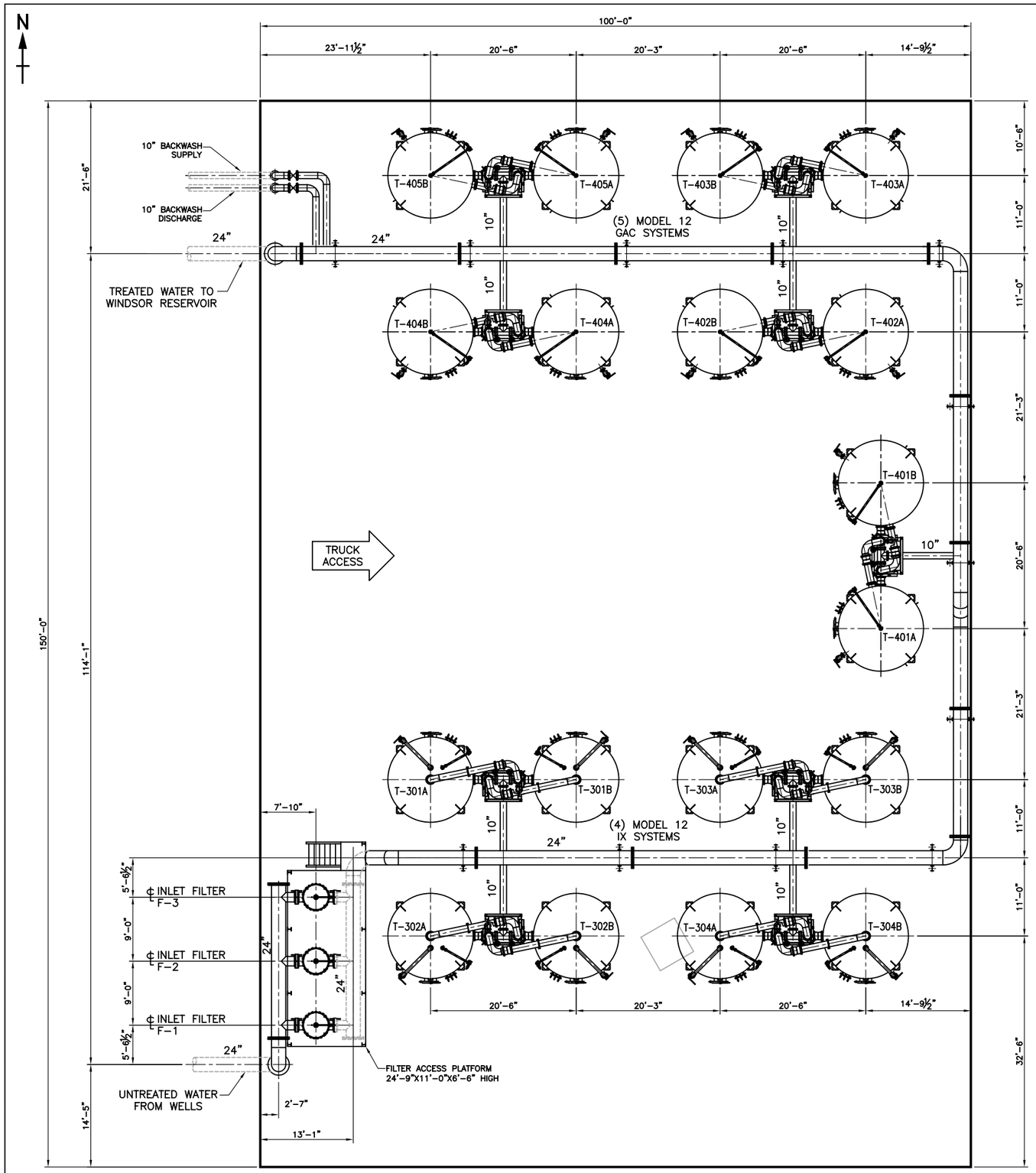

PLAN

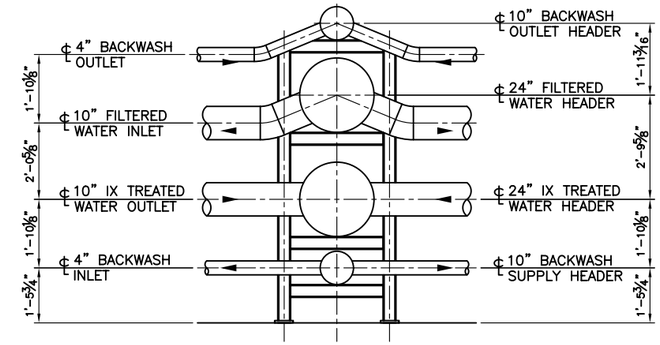

ELEVATION
IX AREA PIPE RACK

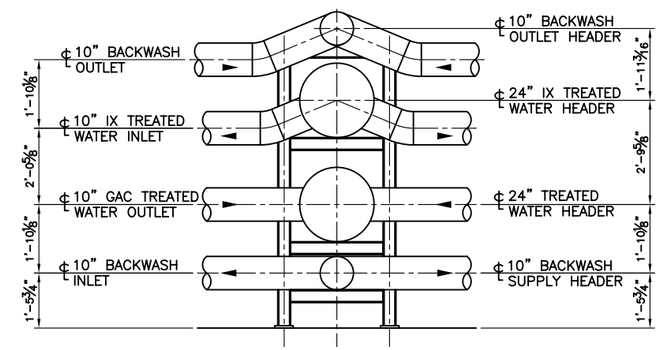

ELEVATION
GAC AREA PIPE RACK

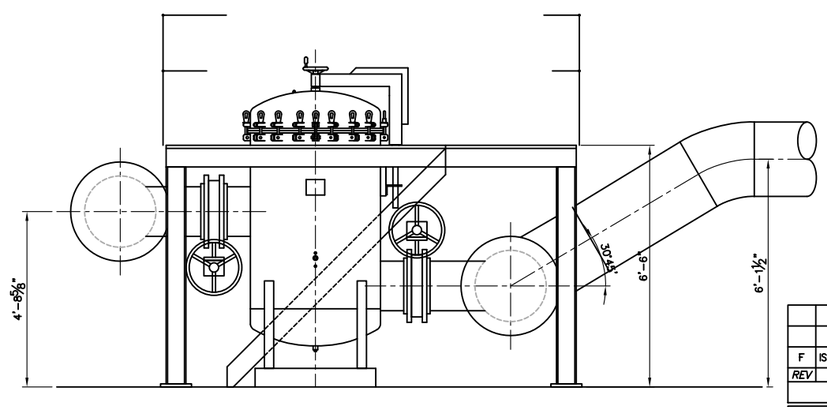

ELEVATION
LOOKING NORTH
AT INLET FILTERS

REV	DESCRIPTION	APP	DATE
F	ISSUED FOR APPROVAL	RES	1/26/09

REVISIONS

TOLERANCES (unless otherwise specified)

ANGULAR	±0°30'	DECIMAL (2 PLACES)	±.010
FRACTIONAL	±1/16"	DECIMAL (3 PLACES)	±.005
DECIMAL (1 PLACE)	±.015	DECIMAL (4 PLACES)	±.0005

THIS DRAWING AND DESIGN IS THE PROPERTY OF CALGON CARBON CORPORATION AND IS NOT TO BE REPRODUCED IN WHOLE OR IN PART NOR EMPLOYED FOR ANY PURPOSE OTHER THAN SPECIFICALLY PERMITTED IN WRITING BY CALGON CARBON CORPORATION. THIS DRAWING LOANED SUBJECT TO RETURN ON DEMAND.

	NAME	DATE
DRAFTER	RES	07/12/2007
DESIGNER		
CHECKER		
APPROVAL		
PROJECT No.	IX-08089.MHLL	

CALGON
CALGON CARBON CORPORATION

CLIENT
MONK HILLS WELLS
PASADENA, CA

TITLE
PERCHLORATE AND VOC REMOVAL
GAC AND IX RESIN
GENERAL ARRANGEMENT

DWG. Size	SHEET No.	SCALE
D	1 OF 1	NONE

DWG. No. 91075161 REV. F

V:\2008\IX-08089.MHLL\Drawings\General Arrangements\91075161 General Arrangement.dwg Jan 28, 2009 - 1:17pm

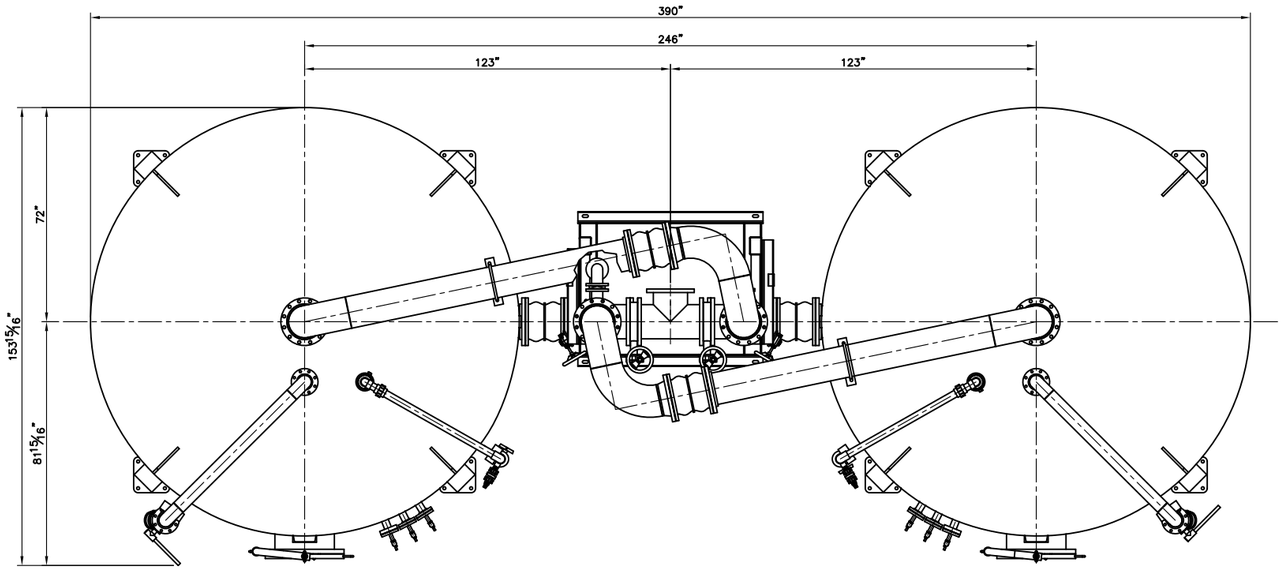

PLAN

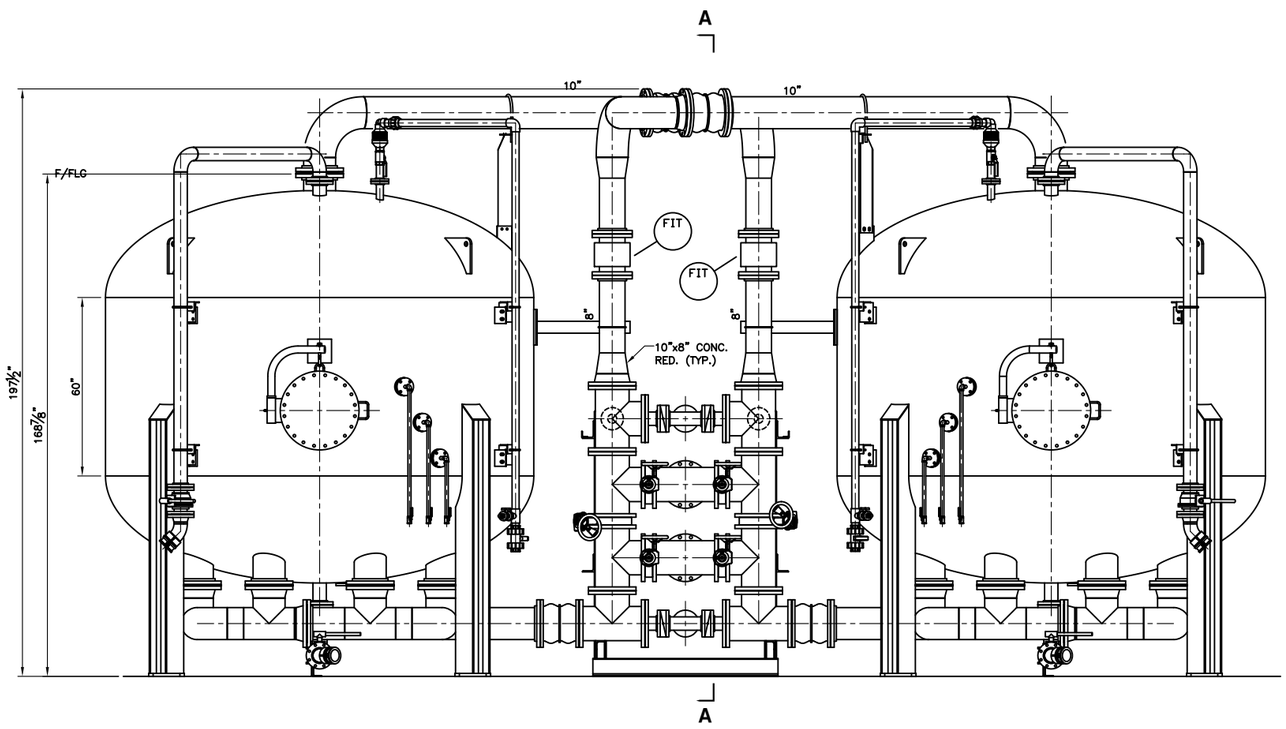

ELEVATION

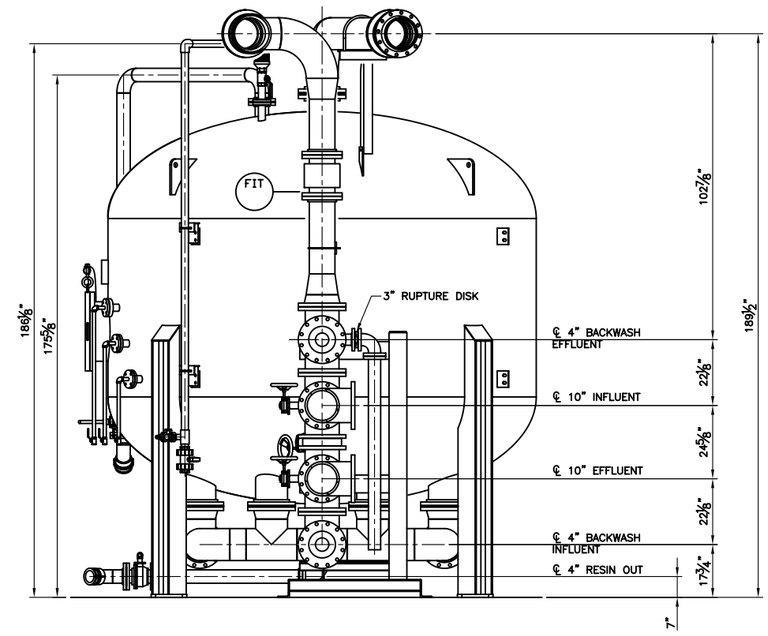

SECTION A-A

NOTES:
1. SYSTEM SHOWN IS TYPICAL OF (4) SYSTEMS TO BE SUPPLIED.
2. PAINT TO BE PER CCC SPECIFICATION RS-17 WITH POLYURETHANE TOP COAT.

REV	DESCRIPTION	APP	DATE
B	ISSUED FOR APPROVAL	RES	1/26/09

REVISIONS

TOLERANCES (unless otherwise specified)

ANGULAR	±0°30'	DECIMAL (2 PLACES)	±.010
FRACTIONAL	±1/16"	DECIMAL (3 PLACES)	±.005
DECIMAL (1 PLACE)	±.015	DECIMAL (4 PLACES)	±.0005

THIS DRAWING AND DESIGN IS THE PROPERTY OF CALGON CARBON CORPORATION AND IS NOT TO BE REPRODUCED IN WHOLE OR IN PART NOR EMPLOYED FOR ANY PURPOSE OTHER THAN SPECIFICALLY PERMITTED IN WRITING BY CALGON CARBON CORPORATION. THIS DRAWING LOANED SUBJECT TO RETURN ON DEMAND.

	NAME	DATE
DRAFTER	RES	9/25/06
DESIGNER		
CHECKER		
APPROVAL		
PROJECT No.	IX-08089.MHLL	

CALGON

CALGON CARBON CORPORATION

CLIENT: MONK HILLS WELS
PASADENA, CA

TITLE: IX RESIN SERVICE
MODEL 12
GENERAL ARRANGEMENT

DWG. Size	SHEET No.	SCALE
D	1 OF 2	NONE

DWG. No. 91075163 REV. B

V:\2008\IX-08089.MHLL\Drawings\General Arrangements\91075163 - GA IX.dwg Jan 28, 2009 - 1:04pm

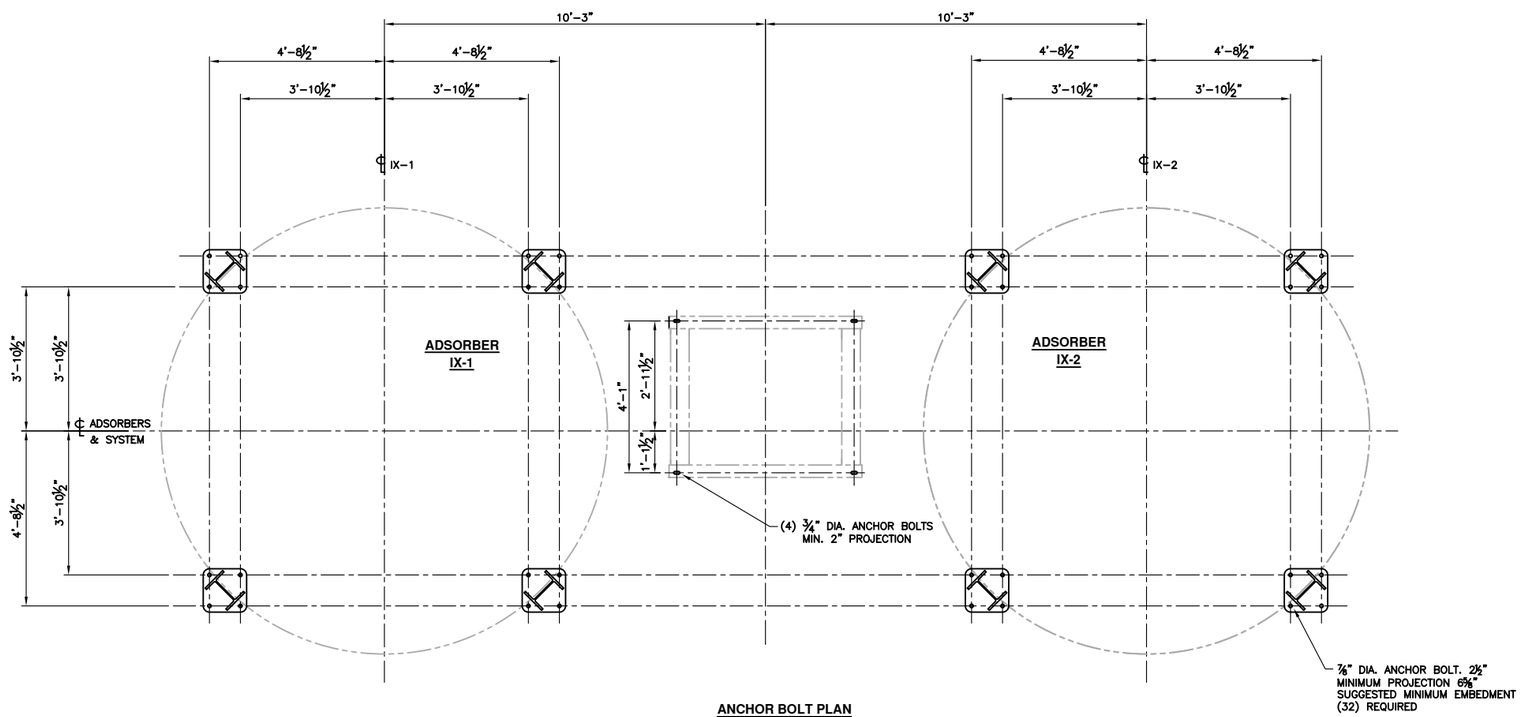

ANCHOR BOLT PLAN

ANCHOR PATTERN SHOWN IS FOR ATTACHMENT OF VESSEL BASEPLATES TO A CONCRETE SLAB IN SIESMIC ZONE 4. TWO LARGE CENTER HOLES ARE PROVIDED IN EACH BASEPLATE FOR ATTACHEMENT TO STEEL FRAMING.

REV	DESCRIPTION	APP	DATE
B	ISSUED FOR APPROVAL	RES	1/26/09

REVISIONS

TOLERANCES (unless otherwise specified)

ANGULAR	±0°30'	DECIMAL (2 PLACES)	±.010
FRACTIONAL	±1/16"	DECIMAL (3 PLACES)	±.005
DECIMAL (1 PLACE)	±.015	DECIMAL (4 PLACES)	±.0005

THIS DRAWING AND DESIGN IS THE PROPERTY OF CALGON CARBON CORPORATION AND IS NOT TO BE REPRODUCED IN WHOLE OR IN PART NOR EMPLOYED FOR ANY PURPOSE OTHER THAN SPECIFICALLY PERMITTED IN WRITING BY CALGON CARBON CORPORATION. THIS DRAWING LOANED SUBJECT TO RETURN ON DEMAND.

	NAME	DATE
DRAFTER	RES	9/25/06
DESIGNER		
CHECKER		
APPROVAL		
PROJECT No.	IX-08089.MHLL	

CALGON

CALGON CARBON CORPORATION

CLIENT: MONK HILLS WELS
PASADENA, CA

TITLE: IX RESIN SERVICE
MODEL 12
GENERAL ARRANGEMENT

DWG. Size	SHEET No.	SCALE
D	2 OF 2	NONE

DWG. No. 91075163 REV. B

V:\2008\IX-08089.MHLL\Drawings\General Arrangements\91075163 - GA IX.dwg Jan 28, 2009 - 1:04pm

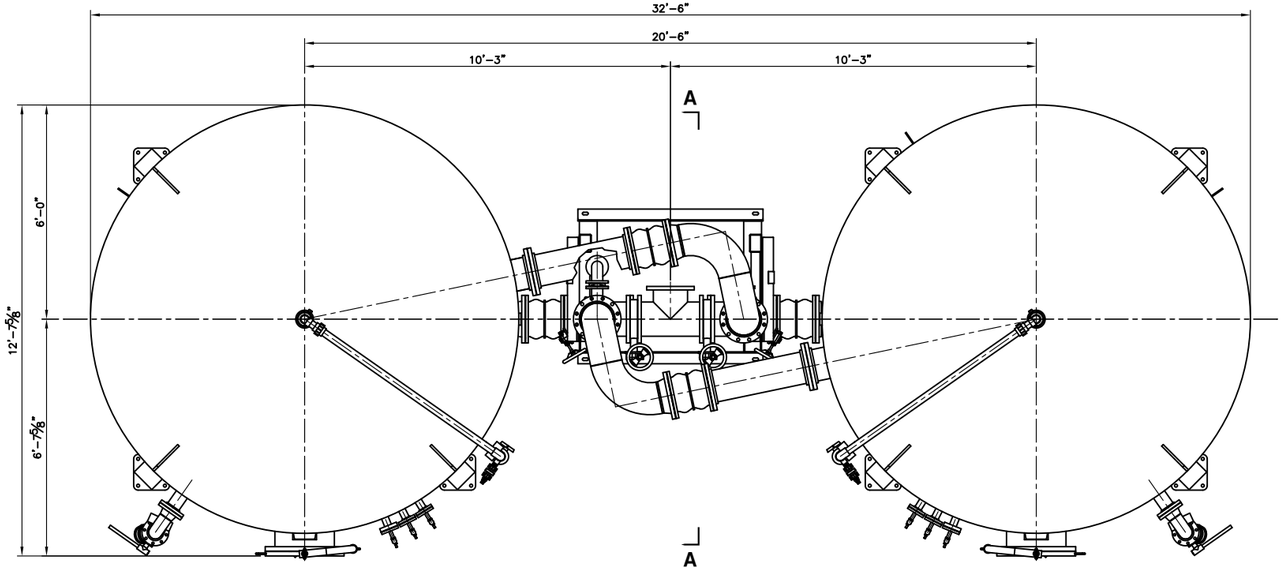

PLAN

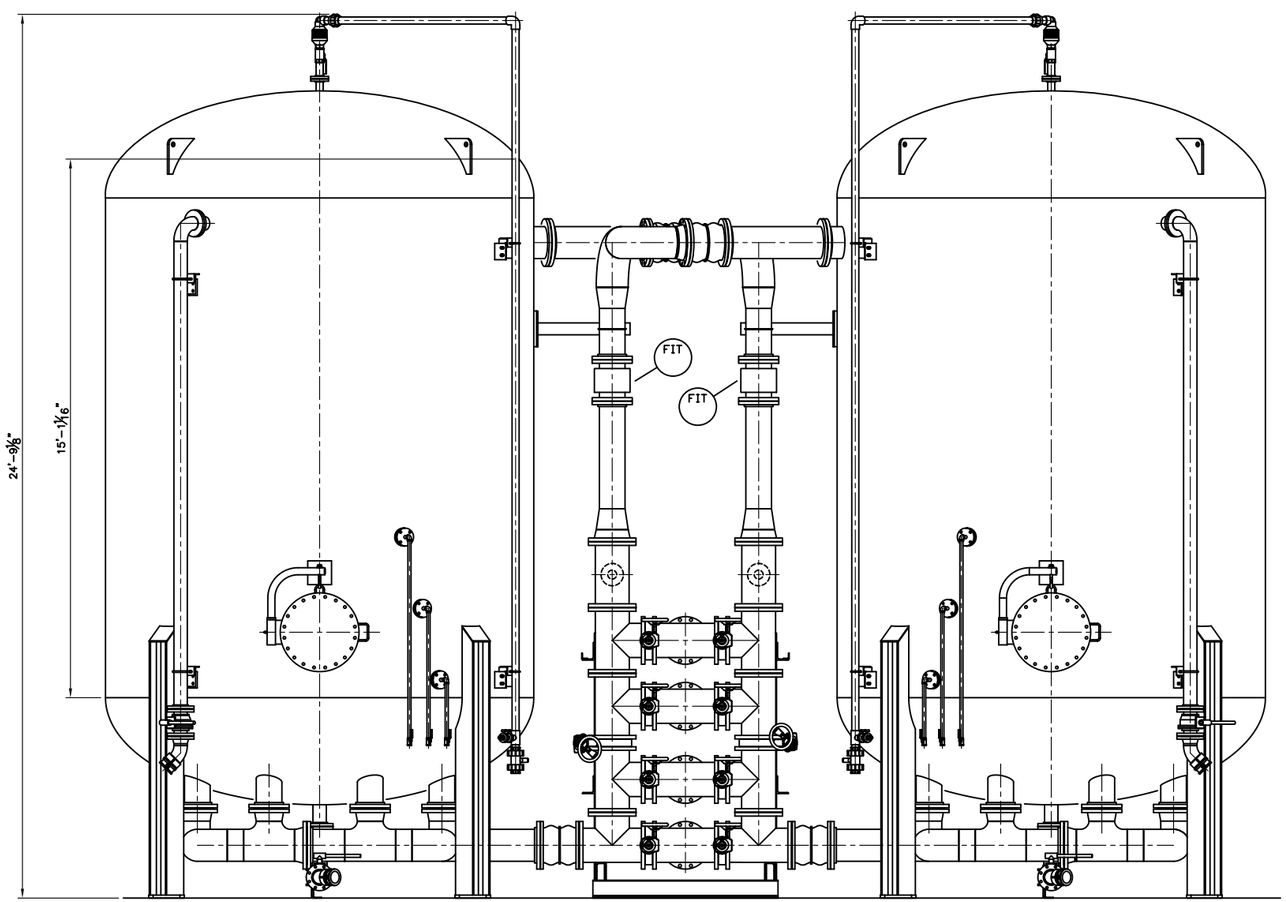

ELEVATION

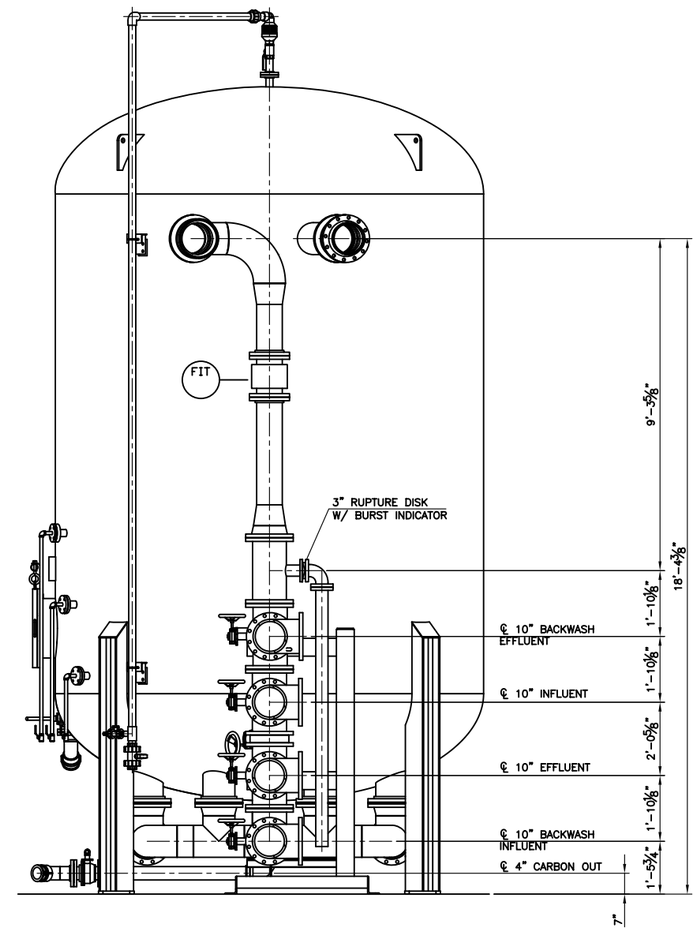

SECTION A-A

NOTES:
1. SYSTEM SHOWN IS TYPICAL OF (5) SYSTEMS TO BE SUPPLIED.
2. PAINT TO BE PER CCC SPECIFICATION RS-17 WITH POLYURETHANE TOP COAT.

REV	DESCRIPTION	APP	DATE

REVISIONS

TOLERANCES (unless otherwise specified)

ANGULAR	±0°30'	DECIMAL (2 PLACES)	±.010
FRACTIONAL	±1/16"	DECIMAL (3 PLACES)	±.005
DECIMAL (1 PLACE)	±.015	DECIMAL (4 PLACES)	±.0005

THIS DRAWING AND DESIGN IS THE PROPERTY OF CALGON CARBON CORPORATION AND IS NOT TO BE REPRODUCED IN WHOLE OR IN PART NOR EMPLOYED FOR ANY PURPOSE OTHER THAN SPECIFICALLY PERMITTED IN WRITING BY CALGON CARBON CORPORATION. THIS DRAWING LOANED SUBJECT TO RETURN ON DEMAND.

	NAME	DATE
DRAFTER	RES	9/25/06
DESIGNER		
CHECKER		
APPROVAL		
PROJECT No.	IX-08089.MHLL	

CALGON

CALGON CARBON CORPORATION

CLIENT: MONK HILLS WELS
PASADENA, CA

TITLE: GAC SERVICE
MODEL 12
GENERAL ARRANGEMENT

DWG. Size	SHEET No.	SCALE
D	1 OF 2	NONE

DWG. No. 91074164 REV. A

V:\2008\IX-08089.MHLL\Drawings\General Arrangements\91075164 - GA GAC.dwg Jan 28, 2009 - 1:03pm

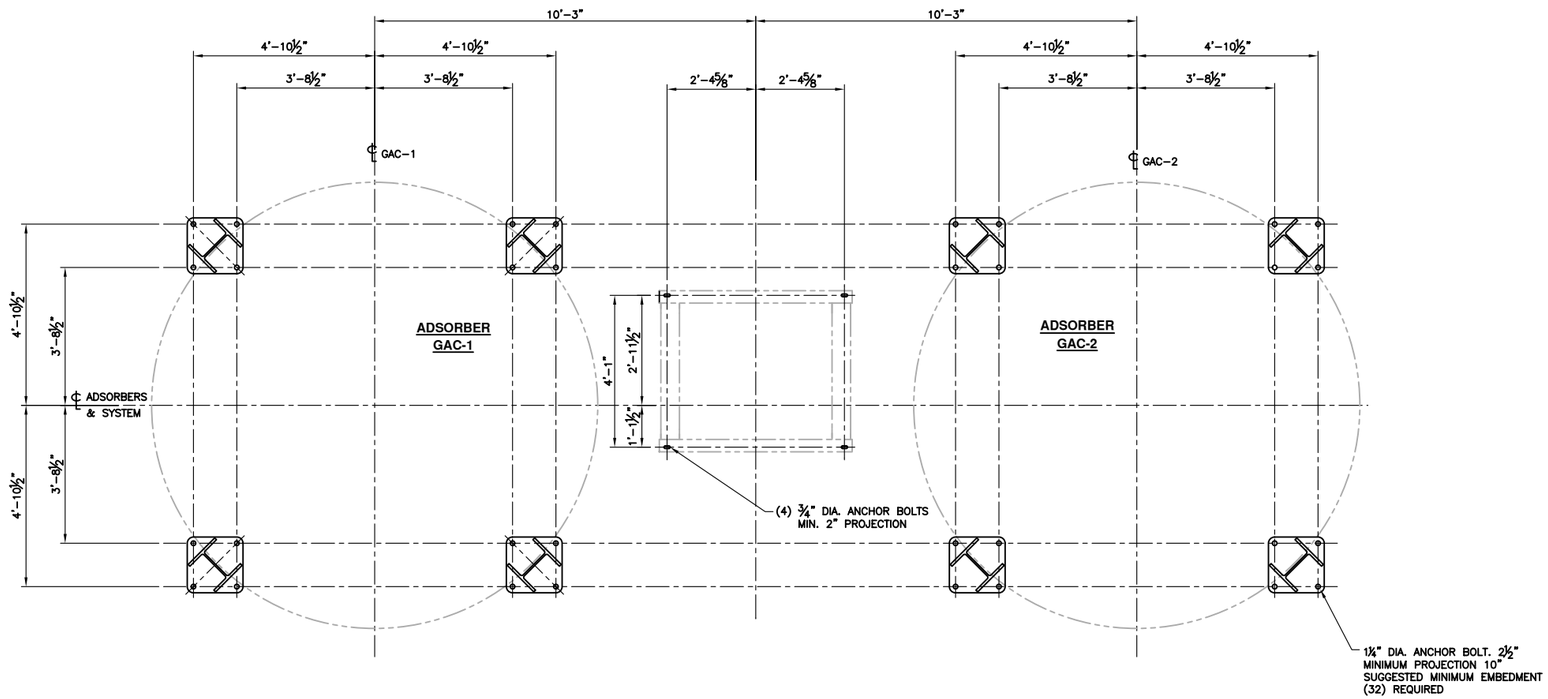

ANCHOR BOLT PLAN

ANCHOR PATTERN SHOWN IS FOR ATTACHMENT OF VESSEL BASEPLATES TO A CONCRETE SLAB IN SIESMIC ZONE 4. TWO LARGE CENTER HOLES ARE PROVIDED IN EACH BASEPLATE FOR ATTACHEMENT TO STEEL FRAMING.

REV	DESCRIPTION	APP	DATE

REVISIONS

TOLERANCES (unless otherwise specified)

ANGULAR	±0°30'	DECIMAL (2 PLACES)	±.010
FRACTIONAL	±1/16"	DECIMAL (3 PLACES)	±.005
DECIMAL (1 PLACE)	±.015	DECIMAL (4 PLACES)	±.0005

CALGON

CALGON CARBON CORPORATION

THIS DRAWING AND DESIGN IS THE PROPERTY OF CALGON CARBON CORPORATION AND IS NOT TO BE REPRODUCED IN WHOLE OR IN PART NOR EMPLOYED FOR ANY PURPOSE OTHER THAN SPECIFICALLY PERMITTED IN WRITING BY CALGON CARBON CORPORATION. THIS DRAWING LOANED SUBJECT TO RETURN ON DEMAND.

	NAME	DATE
DRAFTER	RES	9/25/06
DESIGNER		
CHECKER		
APPROVAL		
PROJECT No.	IX-08089.MHLL	

CLIENT: MONK HILLS WELS
PASADENA, CA

TITLE: GAC SERVICE
MODEL 12
GENERAL ARRANGEMENT

DWG. Size	SHEET No.	SCALE
D	2 OF 2	NONE

DWG. No. 91075164 REV. A

V:\2008\IX-08089.MHLL\Drawings\General Arrangements\91075164 - GA GAC.dwg Jan 28, 2009 - 1:03pm

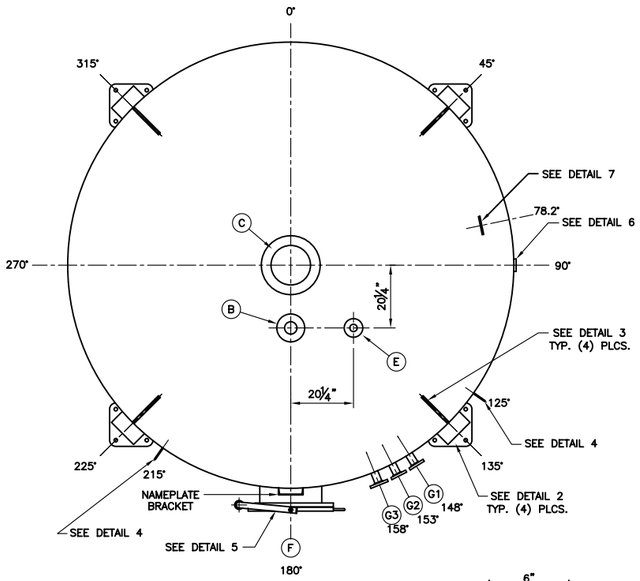

PLAN
T-301A THRU T-304A

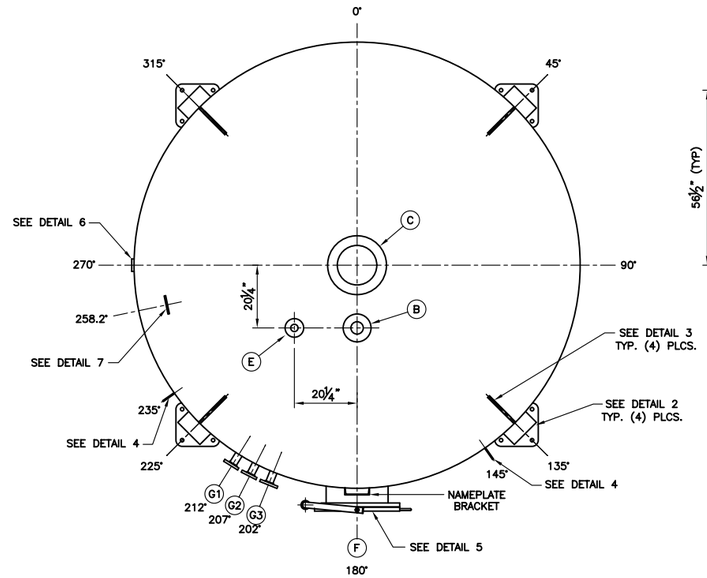

PLAN
T-301B THRU T-304B

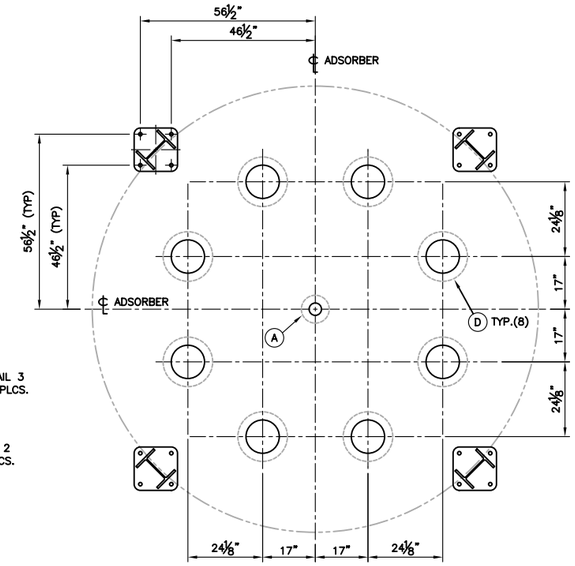

SECTION A-A

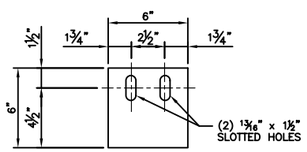

DETAIL 7
PIPE SUPPORT CLIP
(1) REQ'D./VESSEL

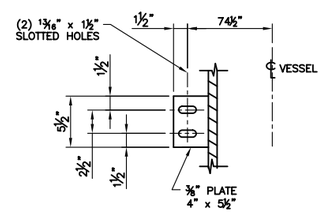

DETAIL 4
PIPE SUPPORT CLIP
(4) REQ'D./VESSEL

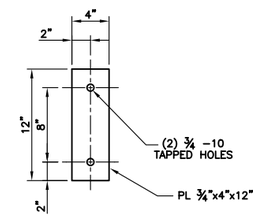

DETAIL 6
PIPE SUPPORT
(1 REQ'D)

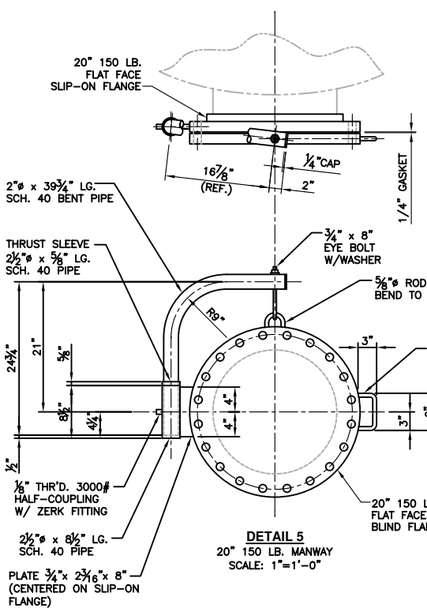

DETAIL 5
20" 150 LB. MANWAY
SCALE: 1"=1'-0"

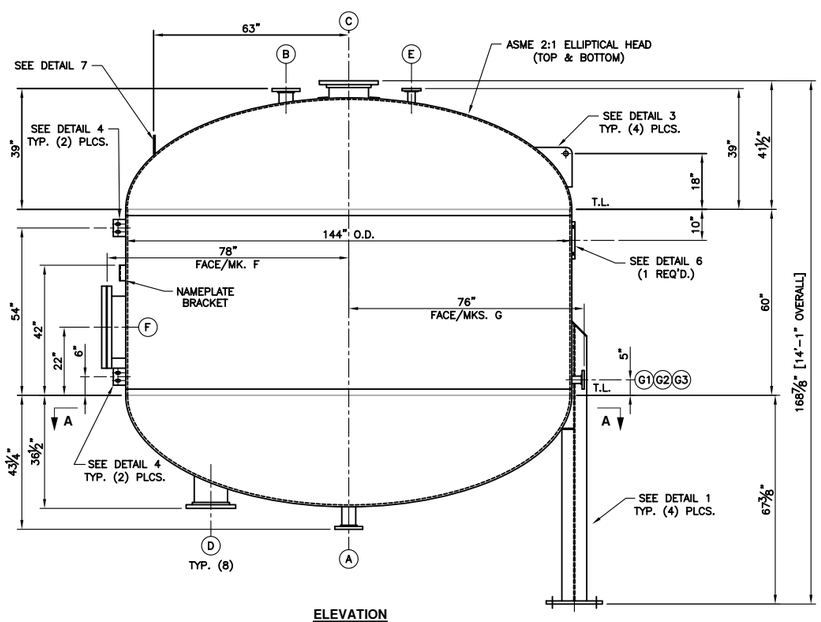

ELEVATION
APPERTENANCES ARE ROTATED FOR CLARITY
SEE PLAN FOR TRUE ORIENTATIONS

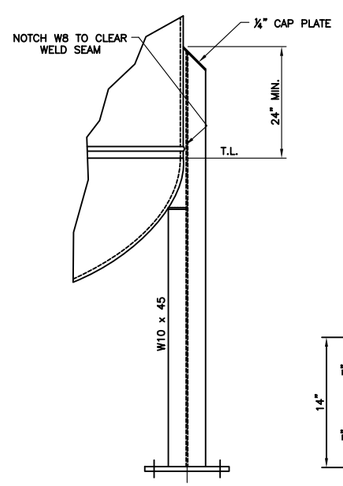

DETAIL 1
VESSEL SUPPORT LEG
(4) REQ'D.

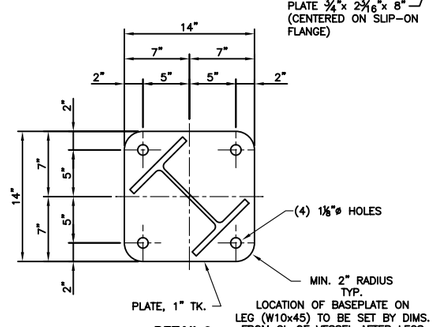

DETAIL 2
TYP. BASEPLATE

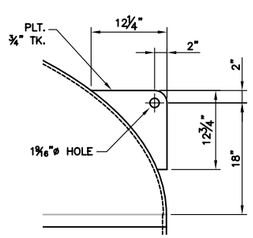

DETAIL 3
LIFTING LUG
(4) REQ'D.

VESSEL DESCRIPTION	EXCHANGER T-301A & B THRU T-304A & B	
REFERENCES	VESSEL SPECIFICATION VS1	
DESIGN CONDITIONS	125 PSIG @ 140° F	
OPERATING CONDITIONS	125 PSIG @ 70° F	
PROCESS FLUID	1.0 S.G. (WATER)	
WALL THICK.	HEAD : T.B.D. (PER CODE CALCS.) SHELL : T.B.D. (PER CODE CALCS.)	
MATERIALS OF CONSTRUCTION	SHELL	SA-516 GRADE 70
	TOP HEAD	SA-516 GRADE 70
	BOT. HEAD	SA-516 GRADE 70
	LINING	PLASITE 4006, 25-35 MIL NOMINAL DFT FORCE CURED PER NSF 61 CRITERIA PIN HOLE FREE FOR IMMERSION SERVICE PER CCC SPEC. VS-23
	LEG SUPPORT	A992
	BOLTING	SA-325-1 WITH HYY HX NUT - SEE NOTE 7
	GASKETS	1/8" EPDM (MANWAY 1/4")
TYPE CONSTRUCTION	FUSION WELDED	
CORROS. ALLOW.	NONE	
CODE	ASME SECTION VIII, DIVISION I, LATEST EDITION	
INSPECTION	BY CALGON & AUTHORIZED INSPECTOR	
STAMPING	ASME " U ", NBR	
TESTING	HYDROSTATIC PER CODE	
STRESS RELIEF	PER CODE	
RADIOGRAPH	PER CODE	
NAMEPLATE	ASME	
STENCILS	"LINED TANK - DO NOT WELD OR BURN"	
SEISMIC LOAD	IBC 2006, Ss=1.774, SITE CLASS D, I=1.25	
INSULATION	NONE	
SURFACE PREP	INTERIOR: WHITE METAL BLAST PER SSPC-SP5 EXTERIOR: ABRASIVE BLAST PER SSPC-SP10	
PAINTING	PER CCC SPEC. RS-17, 5-7 MILS DFT EPOXY MASTIC W/ POLYURETHANE TOP COAT COLOR: TO BE DETERMINED	
LOCATION		
CAPACITIES	FULL	7,500 GAL.
	OPERATING	7,500 GAL. AT 100% FILL
	MEDIA	353 CU. FT.
WEIGHTS	EMPTY	18,700 LBS.
	FULL H_2O	82,000 LBS.
	FULL PRODUCT	33,900 LBS. (DRY MEDIA)
	OPERATING	83,000 LBS.

NOZZLE SCHEDULE

MARK	REQ'D	SIZE	DRILLING	FACING	DESCRIPTION
A	1	4"	150#	F.F.	MEDIA OUTLET
B	1	4"	150#	F.F.	MEDIA INLET/VENT
C	1	10"	150#	F.F.	INFLUENT
D	8	10"	150#	F.F.	EFFLUENT
E	1	2"	150#	F.F.	AIR RELEASE VENT
F	1	20"	150#	F.F.	MANWAY (BLIND FLANGE GSKT.)
G	3	2"	150#	F.F.	SAMPLE POINT

NOTES:
1. ALL INTERIOR WELDS & EDGES TO BE GROUND TO 1/8" MIN. RAD.
2. ALL NOZZLES AND MANWAYS MUST BE FLUSH ON INSIDE OF SHELL, U.O.N.
3. 20" MANWAY FLG. TO BE SECURED WITH (2) BOLTS. REMAINDER OF COVER BOLTS TO BE BOXED FOR SHIPMENT.
4. REMOVE ALL WATER & DIRT AFTER HYDRO.
5. REMOVE ALL WELD SPATTER.
6. ALL NOZZLE BOLT HOLES TO STRADDLE CENTERLINES
7. ALL NUTS & BOLTS TO BE ZINC PLATED.

REV	DESCRIPTION	APP	DATE
A	ISSUED FOR APPROVAL	RES	1-26-09

REVISIONS

TOLERANCES (unless otherwise specified)
ANGULAR ±1/16" DECIMAL (2 PLACES)
FRACTIONAL DECIMAL (3 PLACES)
DECIMAL (1 PLACE) DECIMAL (4 PLACES)

THIS DRAWING AND DESIGN IS THE PROPERTY OF CALGON CARBON CORPORATION AND IS NOT TO BE REPRODUCED IN WHOLE OR IN PART NOR EMPLOYED FOR ANY PURPOSE OTHER THAN SPECIFICALLY PERMITTED IN WRITING BY CALGON CARBON CORPORATION. THIS DRAWING LOANED SUBJECT TO RETURN ON DEMAND.

	NAME	DATE
DRAFTER	JFS	1-21-09
DESIGNER		
CHECKER		
APPROVAL		
PROJECT No.	IX-08089.MHLL	

CALGON
CALGON CARBON CORPORATION

CLIENT: MONK HILLS WELLS
PASEDENA, CA

TITLE: MODULAR ION EXCHANGE SYSTEM
12' DIA. - 125 PSIG
LINED VESSEL

DWG. SIZE: D | SHEET No.: 1 OF 1 | SCALE: NONE
DWG. No.: 91075172 | REV.: A

V:\2008\IX-08089.MHLL\Drawings\Equipment\91075172 - Resin Vessel.dwg Jan 28, 2009 - 1:27pm

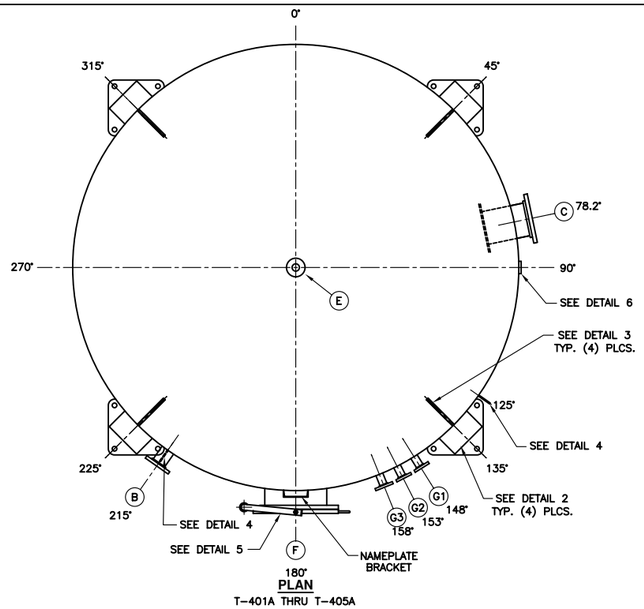

PLAN
T-401A THRU T-405A

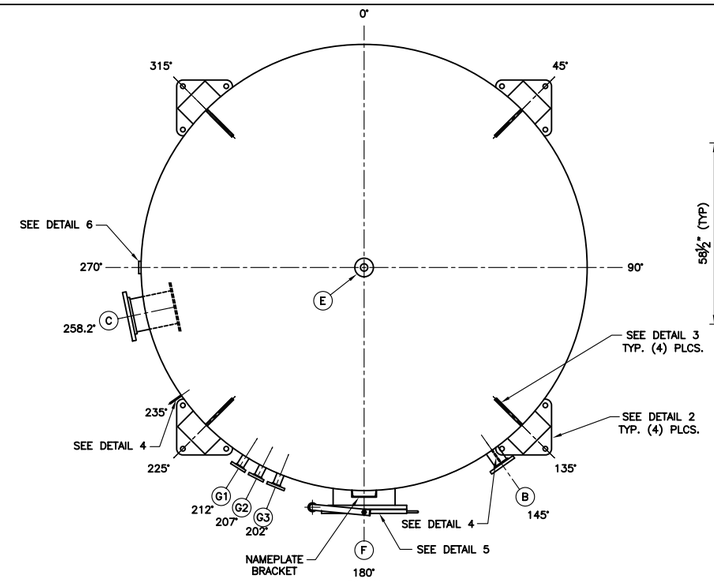

PLAN
T-401B THRU T-405B

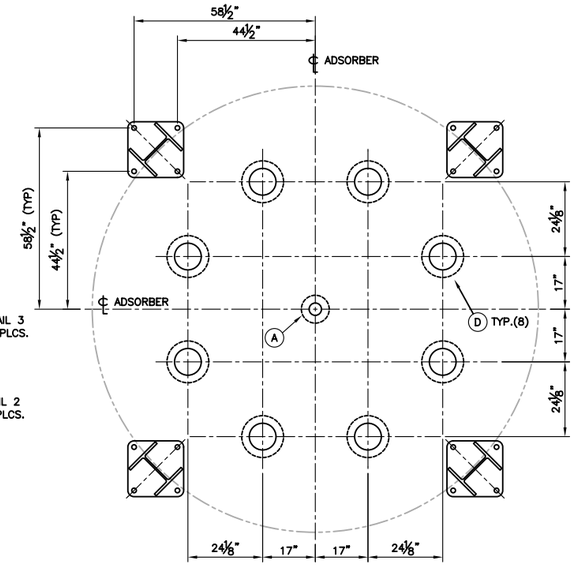

SECTION A-A

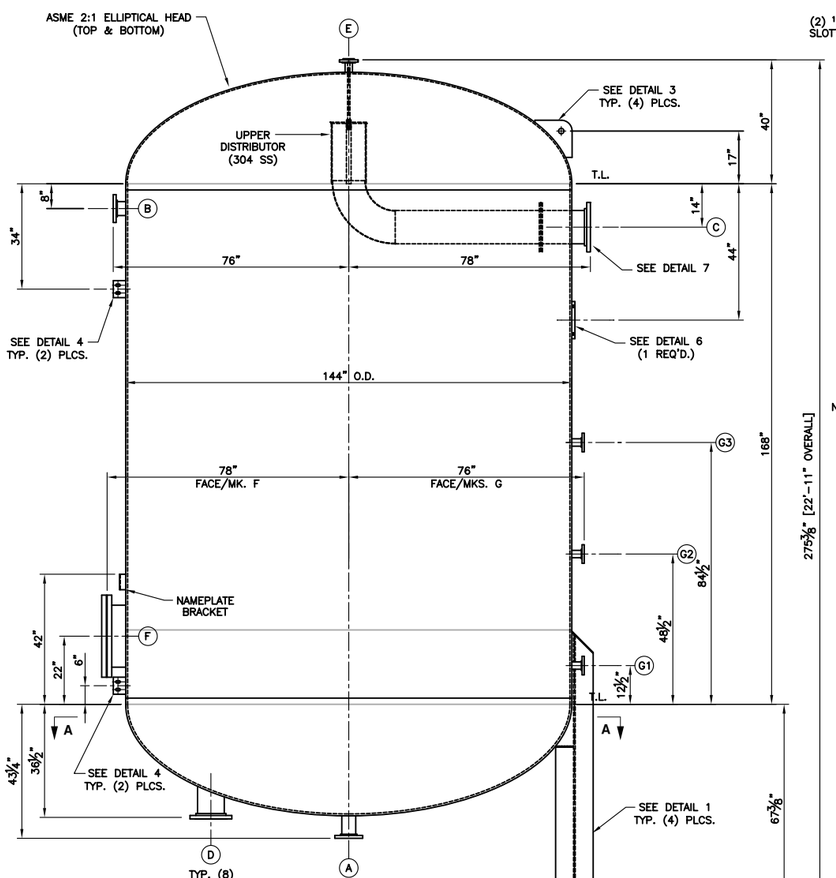

ELEVATION
APPERTENANCES ARE ROTATED FOR CLARITY
SEE PLAN FOR TRUE ORIENTATIONS

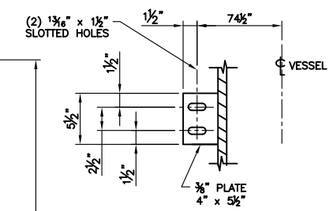

DETAIL 4
PIPE SUPPORT CLIP
(4) REQ'D./VESSEL

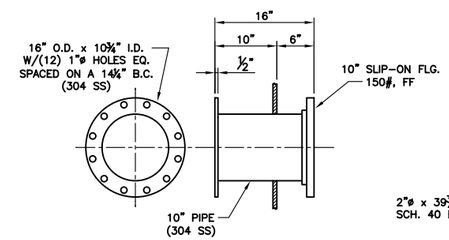

DETAIL 7
INFLUENT NOZZLE

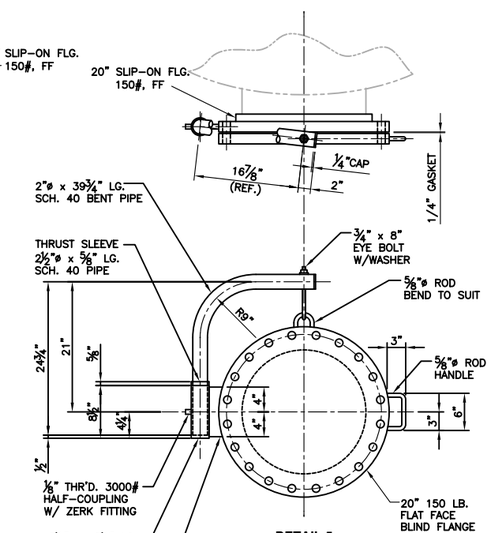

DETAIL 5
20" 150 LB. MANWAY
SCALE: 1"=1'-0"

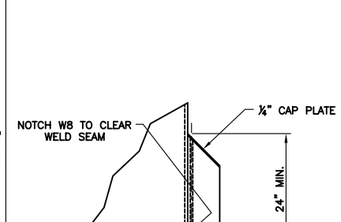

DETAIL 6
PIPE SUPPORT
(1 REQ'D)

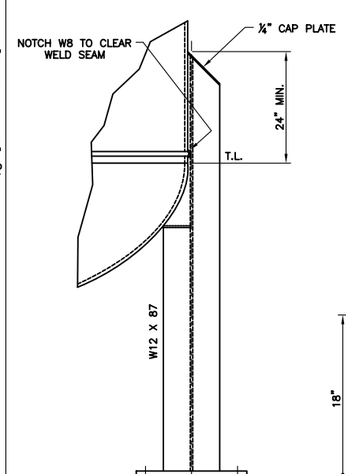

DETAIL 1
VESSEL SUPPORT LEG
(4) REQ'D.

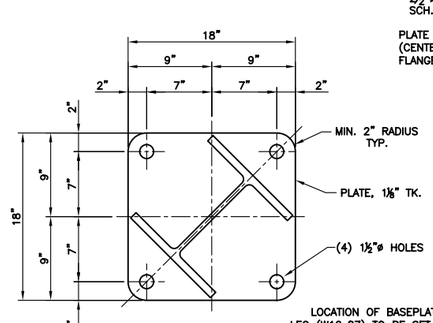

DETAIL 2
TYP. BASEPLATE

LOCATION OF BASEPLATE ON LEG (W12x87) TO BE SET BY DIMS. FROM CL OF VESSEL AFTER LEGS ARE WELDED TO SHELL.

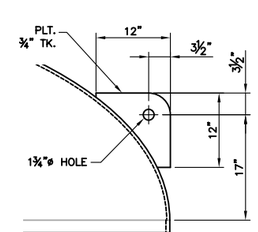

DETAIL 3
LIFTING LUG
(4) REQ'D.

VESSEL DESCRIPTION	ADSORBER T-401A & B THRU T-405A & B	
REFERENCES	VESSEL SPECIFICATION VS1	
DESIGN CONDITIONS	125 PSIG @ 140° F	
OPERATING CONDITIONS	125 PSIG @ 70° F	
PROCESS FLUID	1.0 S.G. (WATER)	
WALL THICK.	HEAD : T.B.D. (PER CODE CALCS.) SHELL : T.B.D. (PER CODE CALCS.)	
MATERIALS OF CONSTRUCTION	SHELL	SA-516 GRADE 70
	TOP HEAD	SA-516 GRADE 70
	BOT. HEAD	SA-516 GRADE 70
	LINING	PLASITE 4006, 25-35 MIL NOMINAL DFT FORCE CURED PER NSF 61 CRITERIA PIN HOLE FREE FOR IMMERSION SERVICE PER CCC SPEC. VS-23
	LEG SUPPORT	A992
	BOLTING	SA-325-1 WITH HVY HX NUT - SEE NOTE 7
	GASKETS	1/8" EPDM (MANWAY 1/4")
TYPE CONSTRUCTION	FUSION WELDED	
CORROS. ALLOW.	NONE	
CODE	ASME SECTION VIII, DIVISION I, LATEST EDITION	
INSPECTION	BY CALGON & AUTHORIZED INSPECTOR	
STAMPING	ASME " U ", NBR	
TESTING	HYDROSTATIC PER CODE	
STRESS RELIEF	PER CODE	
RADIOGRAPH	PER CODE	
NAMEPLATE	ASME	
STENCILS	"LINED TANK - DO NOT WELD OR BURN"	
SEISMIC LOAD	IBC 2006, Ss=1.774, SITE CLASS D, I=1.25	
INSULATION	NONE	
SURFACE PREP	INTERIOR: WHITE METAL BLAST PER SSPC-SP5 EXTERIOR: ABRASIVE BLAST PER SSPC-SP10	
PAINTING	PER CCC SPEC. RS-17, 5-7 MILS DFT EPOXY MASTIC W/ POLYURETHANE TOP COAT COLOR: TO BE DETERMINED	
LOCATION		
CAPACITIES	FULL	15,000 GAL.
	OPERATING	15,000 GAL. AT 100% FILL
	MEDIA	40,000 LBS.
WEIGHTS	EMPTY	28,000 LBS.
	FULL H_2O	154,000 LBS.
	FULL PRODUCT	68,000 LBS. (DRY MEDIA)
	OPERATING	175,000 LBS.

NOZZLE SCHEDULE

MARK	REQ'D	SIZE	DRILLING	FACING	DESCRIPTION
A	1	4"	150#	F.F.	MEDIA OUTLET
B	1	4"	150#	F.F.	MEDIA INLET/VENT
C	1	10"	150#	F.F.	INFLUENT
D	8	8"	150#	F.F.	EFFLUENT
E	1	2"	150#	F.F.	AIR RELEASE VENT
F	1	20"	150#	F.F.	MANWAY (BLIND FLANGE GSKT.)
G	3	2"	150#	F.F.	SAMPLE POINT

NOTES:
1. ALL INTERIOR WELDS & EDGES TO BE GROUND TO 1/8" MIN. RAD.
2. ALL NOZZLES AND MANWAYS MUST BE FLUSH ON INSIDE OF SHELL, U.O.N.
3. 20" MANWAY FLG. TO BE SECURED WITH (2) BOLTS. REMAINDER OF COVER BOLTS TO BE BOXED FOR SHIPMENT.
4. REMOVE ALL WATER & DIRT AFTER HYDRO.
5. REMOVE ALL WELD SPATTER.
6. ALL NOZZLE BOLT HOLES TO STRADDLE CENTERLINES
7. ALL NUTS & BOLTS TO BE ZINC PLATED.

REV	DESCRIPTION	APP	DATE
A	ISSUED FOR APPROVAL	RES	1/26/09

REVISIONS

TOLERANCES (unless otherwise specified)
ANGULAR ±1/16"
FRACTIONAL
DECIMAL (1 PLACE)
DECIMAL (2 PLACES)
DECIMAL (3 PLACES)
DECIMAL (4 PLACES)

CALGON
CALGON CARBON CORPORATION

CLIENT: MONK HILLS WELLS
PASEDENA, CA

TITLE: MODULAR GAC SYSTEM
12' DIA. - 125 PSIG
LINED VESSEL

DWG. SIZE	D	SHEET No. 1 OF 1	SCALE NONE
DWG. No.	91075173		REV. A

THIS DRAWING AND DESIGN IS THE PROPERTY OF CALGON CARBON CORPORATION AND IS NOT TO BE REPRODUCED IN WHOLE OR IN PART NOR EMPLOYED FOR ANY PURPOSE OTHER THAN SPECIFICALLY PERMITTED IN WRITING BY CALGON CARBON CORPORATION. THIS DRAWING LOANED SUBJECT TO RETURN ON DEMAND.

	NAME	DATE
DRAFTER	JFS	1-21-09
DESIGNER		
CHECKER		
APPROVAL		
PROJECT No.	IX-08089.MHLL	

V:\2008\IX-08089.MHLL\Drawings\Equipment\91075173 - GAC Vessel.dwg Jan 28, 2009 - 1:29pm

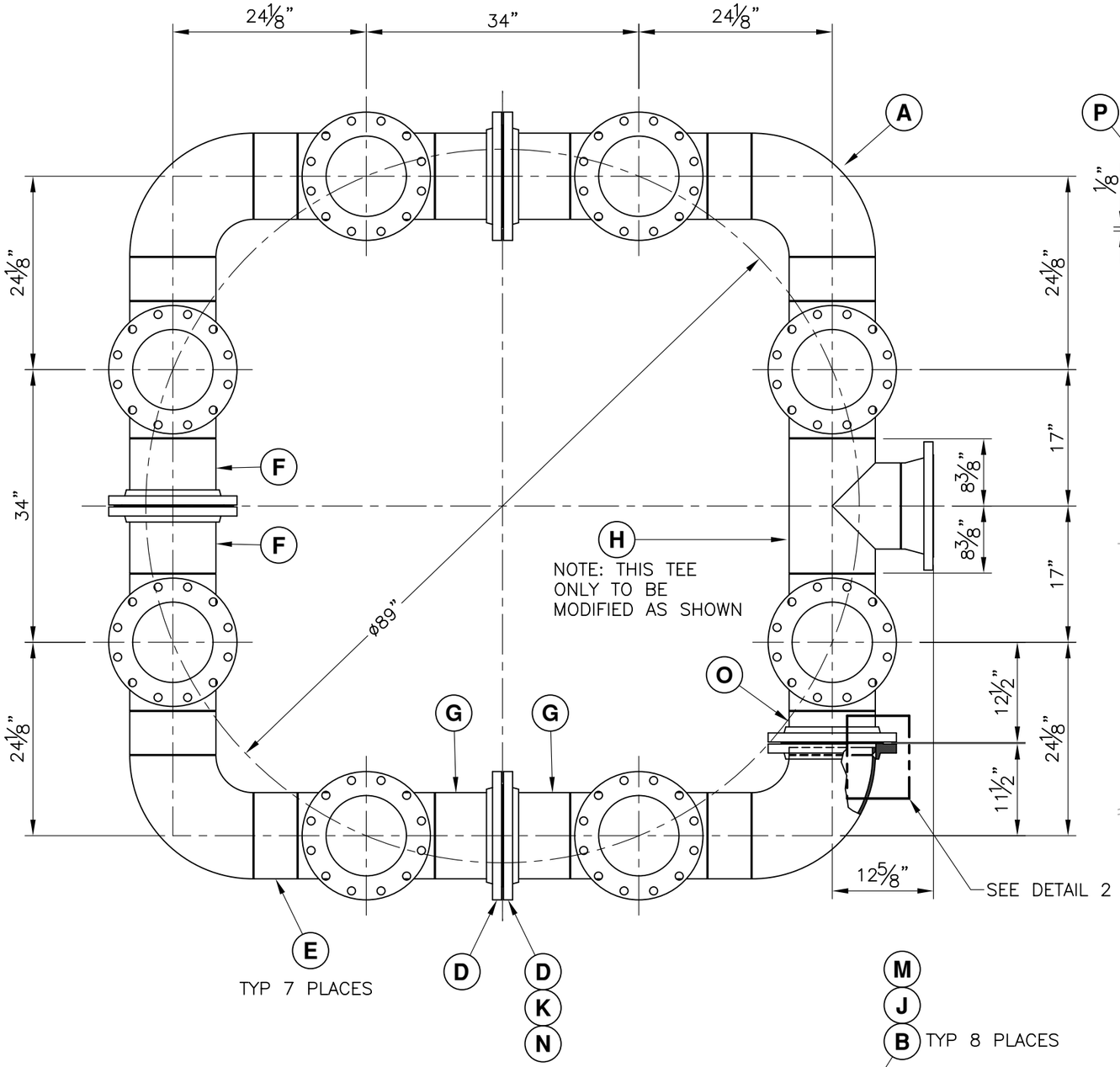

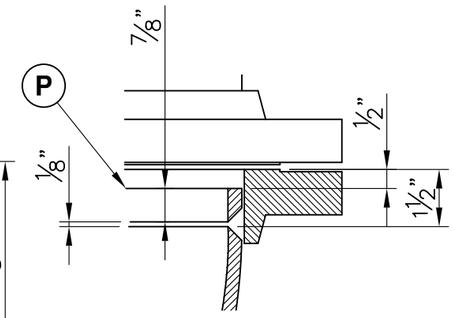

DETAIL 2

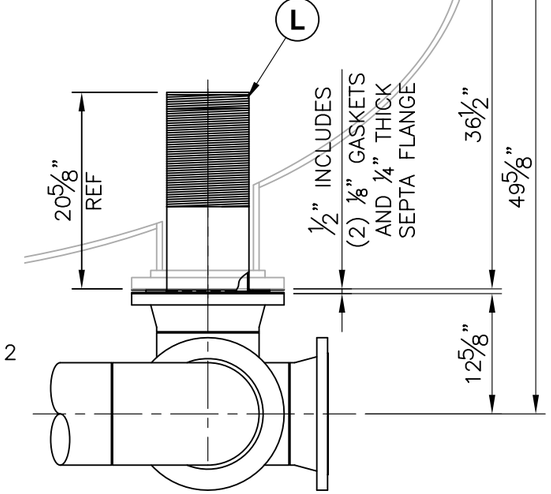

DETAIL 1

SEPTA ASSEMBLY

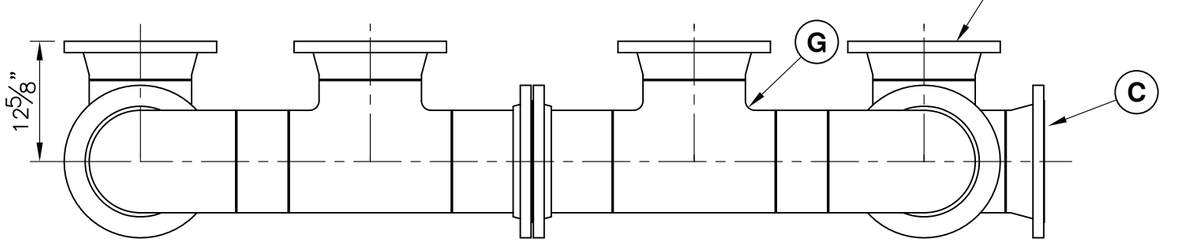

BILL OF MATERIALS

ITEM	QTY.	PART NO.	DESCRIPTION	MAT'L.
A	4	---	ELBOW, S.R., 90 DEG, SCH 40, 10"	
B	8	---	FLANGE, WELD NECK, F.F., CLASS 150, 10"	
C	1	---	FLANGE, WELD NECK, R.F., CLASS 150, 10"	
D	8	---	FLANGE, SLIP-ON, R.F., CLASS 150, 10"	
E	7	---	PIPE, SCH 40, 10" x 5-3/8" LG.	
F	2	---	PIPE, SCH 40, 10" x 7-13/16" LG.	
G	4	---	PIPE, SCH 40, 10" x 7-13/16" LG.	
H	9	---	TEE, STRAIGHT, SCH 40, 10"	
J	16	---	GASKET, 10" FULL FACE, 1/8" TK., 150# DRILLING	
K	4	---	GASKET, 10" RING, 1/8" TK.	
L	8	---	8" BAYONET SEPTA (CCC TO SUPPLY)	316L SS
M	96	---	BOLT, 7/8" x 4 1/2", HVY. HEX W/NUT	
N	24	---	BOLT, 7/8" x 4", HVY. HEX W/NUT	
O	1	---	PIPE, SCH 40, 10" x 3-3/8" LG.	
P	1	---	PIPE, SCH 40, 10" x 7/8" LG.	

NOTES:

1. APPROXIMATE WEIGHT: 2,400 LB
2. PIPE AND FITTINGS TO BE PER CCC SPECIFICATIONS C2 & L6.
3. GASKETS TO BE PER CCC SPECIFICATION G2.
4. BOLTING TO BE PER CCC SPECIFICATION F3.
5. B.O.M. CUT LENGTHS INCLUDE 1/8" WELD GAP AT FITTINGS & 1/2" SETBACK AT SLIP-ON FLANGES (U.N.O.).
6. EACH COLLECTION HEADER TO BE MATCH MARKED TO A SPECIFIC VESSEL.
7. BOLT HOLES TO STRADDLE VESSEL CENTERLINES.

REV	DESCRIPTION	APP	DATE
A	ISSUED FOR APPROVAL	RES	1/26/09

REVISIONS

TOLERANCES (unless otherwise specified)

ANGULAR	±0°30'	DECIMAL (2 PLACES)	±.010
FRACTIONAL	±1/16"	DECIMAL (3 PLACES)	±.005
DECIMAL (1 PLACE)	±.015	DECIMAL (4 PLACES)	±.0005

THIS DRAWING AND DESIGN IS THE PROPERTY OF CALGON CARBON CORPORATION AND IS NOT TO BE REPRODUCED IN WHOLE OR IN PART NOR EMPLOYED FOR ANY PURPOSE OTHER THAN SPECIFICALLY PERMITTED IN WRITING BY CALGON CARBON CORPORATION. THIS DRAWING LOANED SUBJECT TO RETURN ON DEMAND.

	NAME	DATE
DRAFTER	JFS	1/26/09
DESIGNER		
CHECKER		
APPROVAL		
PROJECT No.	IX-08089.MHLL	

CALGON

CALGON CARBON CORPORATION

CLIENT: MONK HILLS WELLS PASEDENA, CA

TITLE: 12'-0" DIA. VESSEL (RESIN) COLLECTION HEADER DETAIL & ASSEMBLY

DWG. Size: B | SHEET No.: 1 OF 1 | SCALE: NTS

DWG. No.: 91075174 | REV.: A

V:\2008\IX-08089.MHLL\Drawings\Piping\91075174 - IX UD.dwg Jan 26, 2009 - 3:23pm

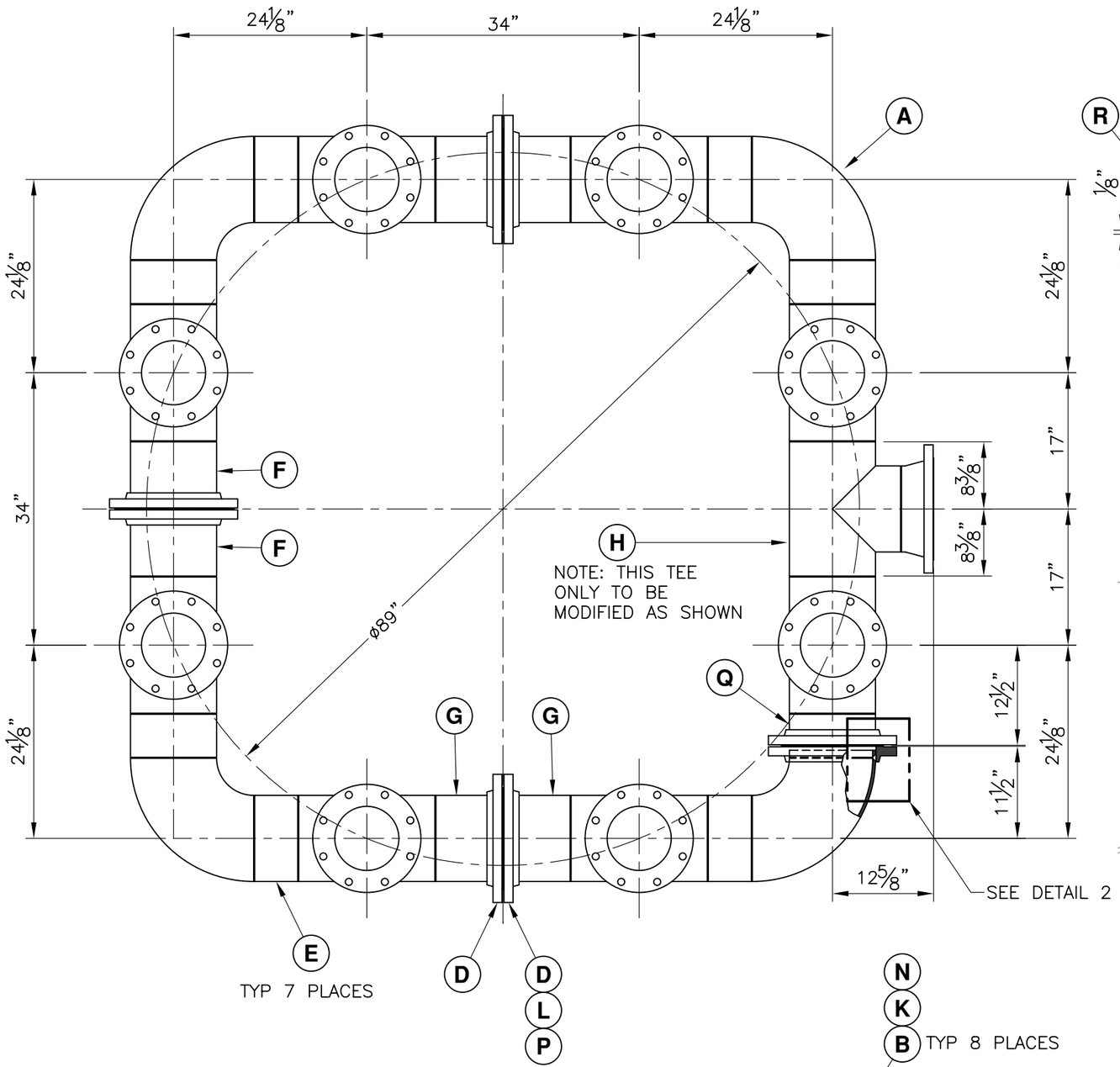

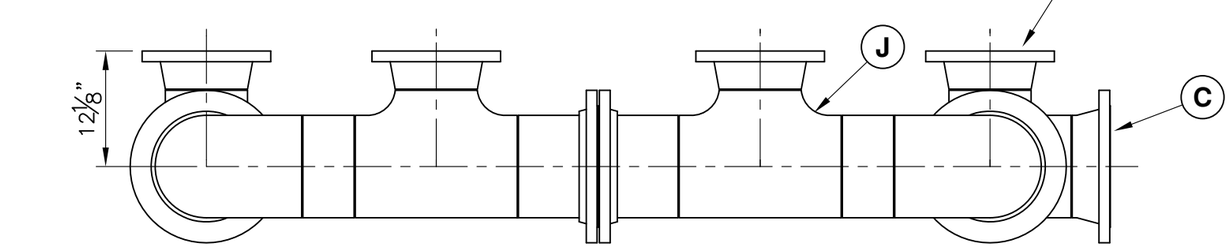

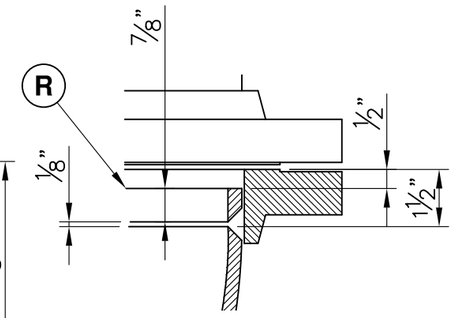

DETAIL 2

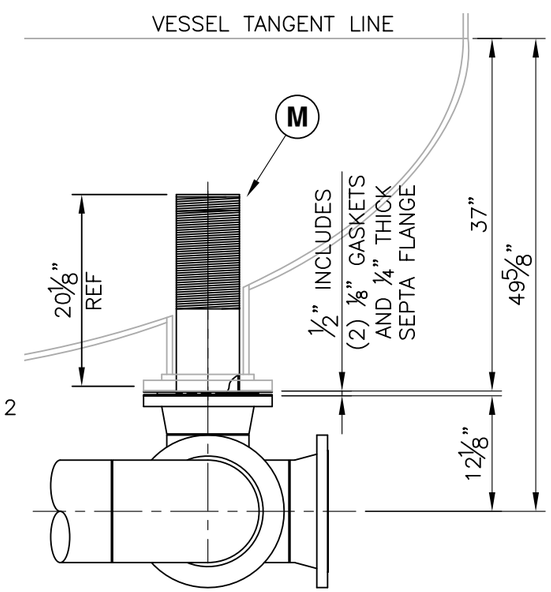

DETAIL 1

SEPTA ASSEMBLY

BILL OF MATERIALS				
ITEM	QTY.	PART NO.	DESCRIPTION	MAT'L.
A	4	---	ELBOW, S.R., 90 DEG, SCH 40, 10"	
B	8	---	FLANGE, WELD NECK, F.F., CLASS 150, 8"	
C	1	---	FLANGE, WELD NECK, R.F., CLASS 150, 10"	
D	8	---	FLANGE, SLIP-ON, R.F., CLASS 150, 10"	
E	7	---	PIPE, SCH 40, 10" x 5-3/8" LG.	
F	2	---	PIPE, SCH 40, 10" x 7-13/16" LG.	
G	4	---	PIPE, SCH 40, 10" x 7-13/16" LG.	
H	1	---	TEE, STRAIGHT, SCH 40, 10"	
J	8	---	TEE, REDUCING, SCH 40, 10" x 8"	
K	16	---	GASKET, 8" FULL FACE, 1/8" TK., 150# DRILLING	
L	4	---	GASKET, 10" RING, 1/8" TK.	
M	8	---	6" BAYONET SEPTA (CCC TO SUPPLY)	316L SS
N	64	---	BOLT, 3/4" x 4", HVY. HEX W/NUT	
P	24	---	BOLT, 7/8" x 4", HVY. HEX W/NUT	
Q	1	---	PIPE, SCH 40, 10" x 3-3/8" LG.	
R	1	---	PIPE, SCH 40, 10" x 7/8" LG.	

NOTES:

1. APPROXIMATE WEIGHT: 2,400 LB
2. PIPE AND FITTINGS TO BE PER CCC SPECIFICATIONS C2 & L6.
3. GASKETS TO BE PER CCC SPECIFICATION G2.
4. BOLTING TO BE PER CCC SPECIFICATION F3.
5. B.O.M. CUT LENGTHS INCLUDE 1/8" WELD GAP AT FITTINGS & 1/2" SETBACK AT SLIP-ON FLANGES (U.N.O.).
6. EACH COLLECTION HEADER TO BE MATCH MARKED TO A SPECIFIC VESSEL.
7. BOLT HOLES TO STRADDLE VESSEL CENTERLINES.

REV	DESCRIPTION	APP	DATE
A	ISSUED FOR APPROVAL	RES	1/26/09

REVISIONS

TOLERANCES (unless otherwise specified)

ANGULAR	±0°30'	DECIMAL (2 PLACES)	±.010
FRACTIONAL	±1/16"	DECIMAL (3 PLACES)	±.005
DECIMAL (1 PLACE)	±.015	DECIMAL (4 PLACES)	±.0005

THIS DRAWING AND DESIGN IS THE PROPERTY OF CALGON CARBON CORPORATION AND IS NOT TO BE REPRODUCED IN WHOLE OR IN PART NOR EMPLOYED FOR ANY PURPOSE OTHER THAN SPECIFICALLY PERMITTED IN WRITING BY CALGON CARBON CORPORATION. THIS DRAWING LOANED SUBJECT TO RETURN ON DEMAND.

	NAME	DATE
DRAFTER	JFS	1/26/09
DESIGNER		
CHECKER		
APPROVAL		
PROJECT No.	IX-08089.MHLL	

CALGON

CALGON CARBON CORPORATION

CLIENT: MONK HILLS WELLS PASEDENA, CA

TITLE: 12'-0" DIA. VESSEL (CARBON) COLLECTION HEADER DETAIL & ASSEMBLY

DWG. Size: B | SHEET No.: 1 OF 1 | SCALE: NTS

DWG. No.: 91075175 | REV.: A

V:\2008\IX-08089.MHLL\Drawings\Piping\91075175 - GAC UD.dwg Jan 26, 2009 - 3:24pm

BILL OF MATERIALS				
ITEM	QTY.	PART NO.	DESCRIPTION	MAT'L.
A	1	---	PLATE FLANGE – 13 O.D. ±1/16" x 8-3/4" I.D.	316L SS
			x 1/4" THICK	
B	1	---	PIPE – 8", SCH 10S, 8-5/8" LG.	A312
C	1	---	CAP PLATE – 8-5/8" O.D. x 1/4" THICK	316L SS
D	1	---	BASKET – WEDGE WIRE #60, 8-5/8" O.D. x 12" LG.	316L SS
E	40	---	SUPPORT ROD – WEDGE WIRE 0.1875 x 12" LG.	316L SS

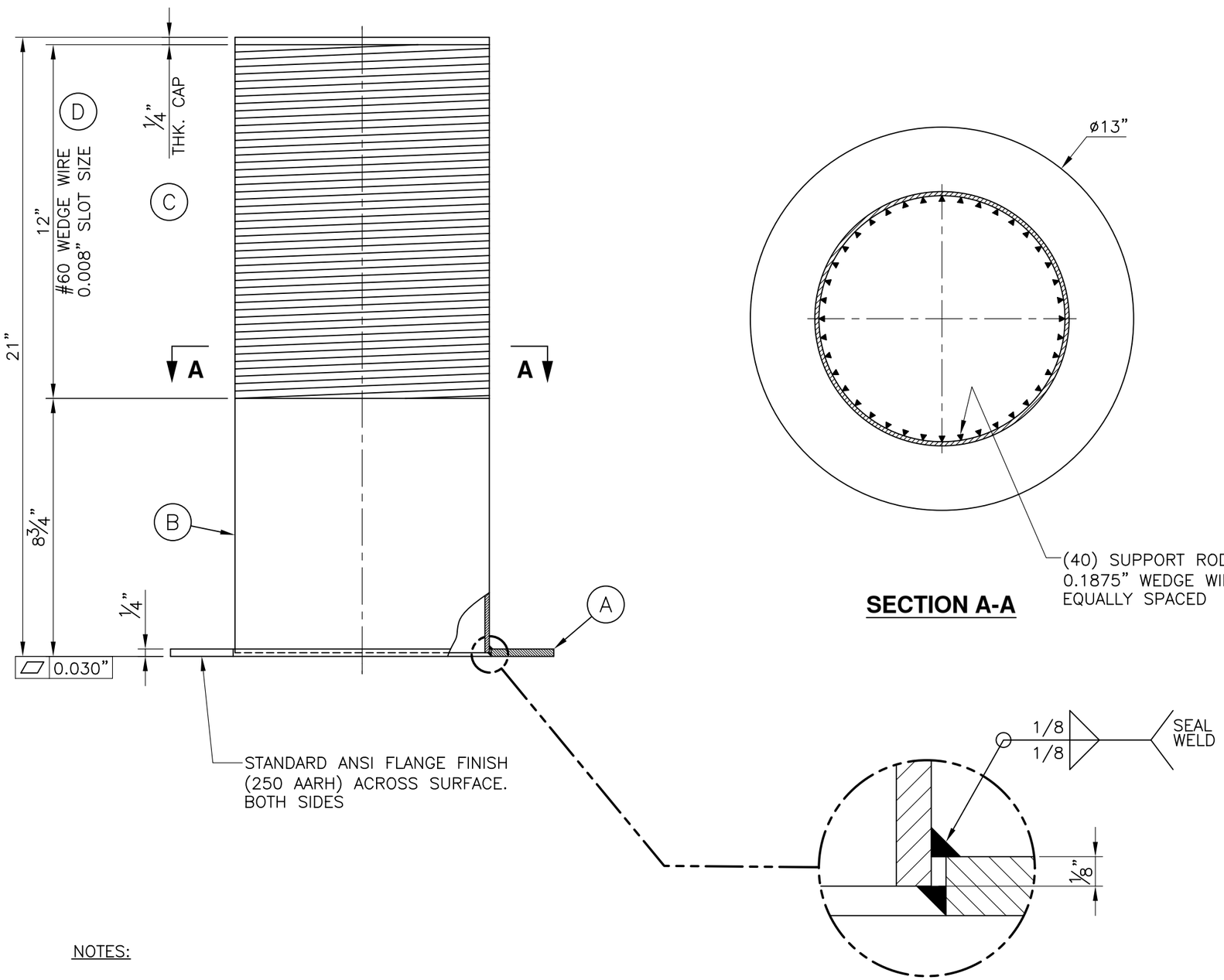

NOTES:

1. REMOVE ALL BURRS AND SHARP EDGES.

SAP NUMBER: 1048625

THIS DRAWING AND DESIGN IS THE PROPERTY OF CALGON CARBON CORPORATION AND IS NOT TO BE REPRODUCED IN WHOLE OR IN PART NOR EMPLOYED FOR ANY PURPOSE OTHER THAN SPECIFICALLY PERMITTED IN WRITING BY CALGON CARBON CORPORATION. THIS DRAWING LOANED SUBJECT TO RETURN ON DEMAND.

	NAME	DATE
DRAFTER	VGM	8/22/06
DESIGNER	VGM	8/22/06
CHECKER	BKM	8/29/06
APPROVAL		
PROJECT No.	STANDARD	

REV	DESCRIPTION	APP	DATE
0	ISSUED FOR FABRICATION	RES	8/30/06

REVISIONS

TOLERANCES (unless otherwise specified)

ANGULAR — DECIMAL (2 PLACES)
FRACTIONAL ±1/16" — DECIMAL (3 PLACES)
DECIMAL (1 PLACE) — DECIMAL (4 PLACES)

CALGON

CALGON CARBON CORPORATION

CLIENT: STANDARD

TITLE: BAYONET SEPTA, 8" DIA. 316LSS, 0.008" SLOT DETAILS

DWG. Size: B | SHEET No.: 1 OF 1 | SCALE: NTS

DWG. No.: 90060210 | REV.: 0

V:\2008\IX-08089.MHLL\Drawings\Piping\90060210_8in SEPTA.dwg Jan 26, 2009 - 3:10pm

BILL OF MATERIALS				
ITEM	QTY.	PART NO.	DESCRIPTION	MAT'L.
A	1	---	PLATE FLANGE – 10-5/8" O.D. ±1/16" x 6-3/4" I.D.	316L SS
			x 1/4" THICK	
B	1	---	PIPE – 6", SCH 10S, 8-5/8" LG.	A312
C	1	---	CAP PLATE – 6-5/8" O.D. x 1/4" THICK	316L SS
D	1	---	BASKET – WEDGE WIRE #60, 6-5/8" O.D. x 12" LG.	316L SS
E	40	---	SUPPORT ROD – WEDGE WIRE 0.1875 x 12" LG.	316L SS

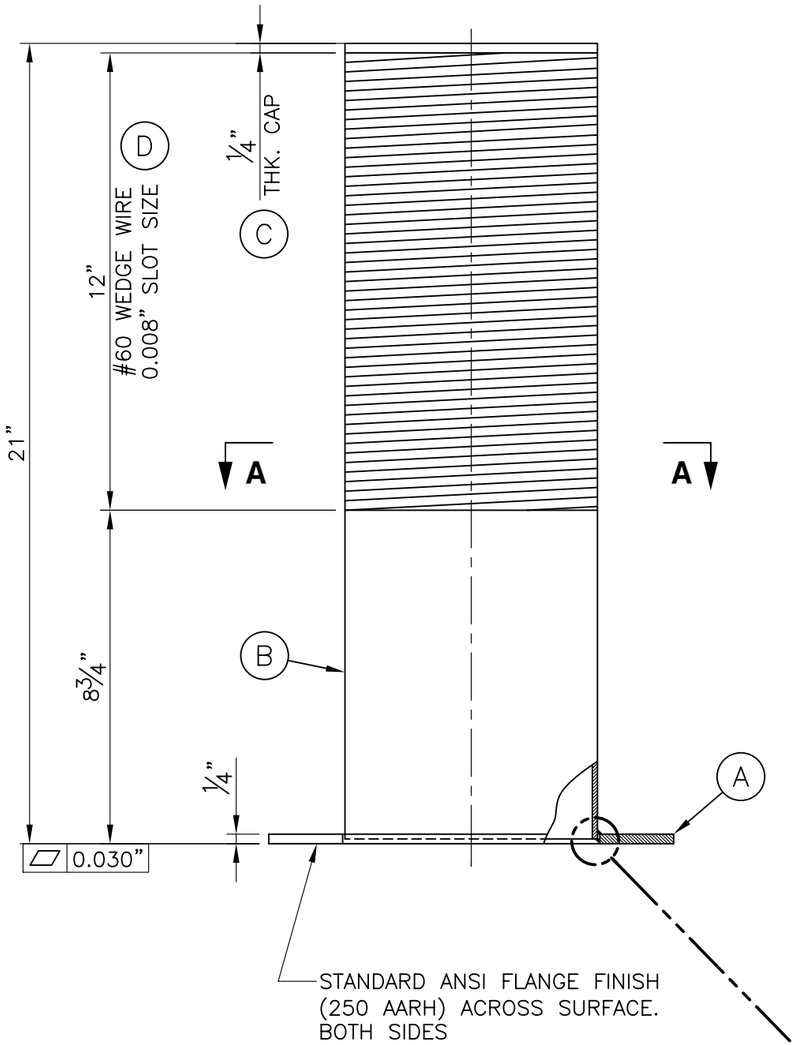

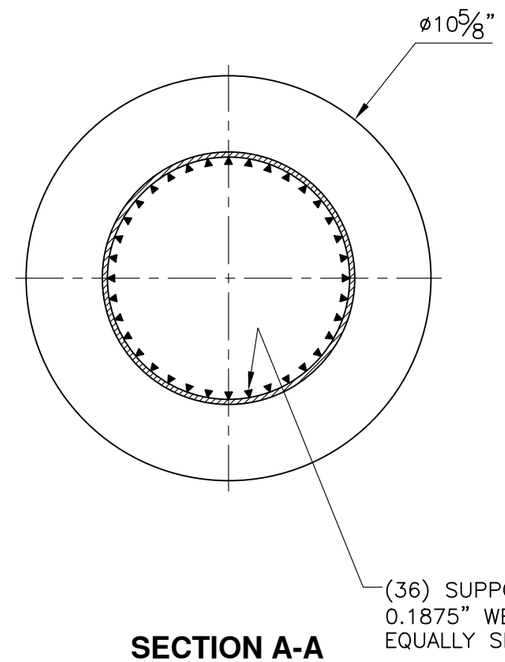

SECTION A-A

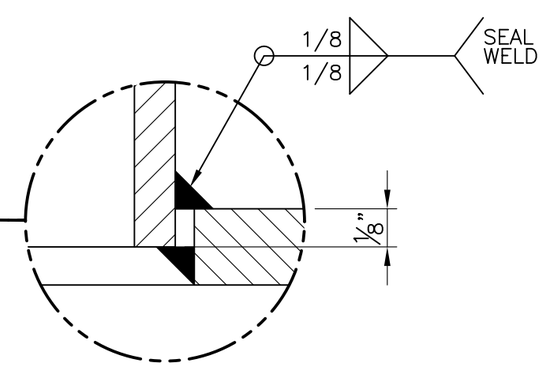

NOTES:

1. REMOVE ALL BURRS AND SHARP EDGES.

REV	DESCRIPTION	APP	DATE
0	ISSUED FOR FABRICATION		1/23/09

REVISIONS

TOLERANCES (unless otherwise specified)

ANGULAR		DECIMAL (2 PLACES)
FRACTIONAL	±1/16"	DECIMAL (3 PLACES)
DECIMAL (1 PLACE)		DECIMAL (4 PLACES)

THIS DRAWING AND DESIGN IS THE PROPERTY OF CALGON CARBON CORPORATION AND IS NOT TO BE REPRODUCED IN WHOLE OR IN PART NOR EMPLOYED FOR ANY PURPOSE OTHER THAN SPECIFICALLY PERMITTED IN WRITING BY CALGON CARBON CORPORATION. THIS DRAWING LOANED SUBJECT TO RETURN ON DEMAND.

	NAME	DATE
DRAFTER	G.MARRA	1/23/09
DESIGNER		
CHECKER		
APPROVAL		
PROJECT No.	STANDARD	

CALGON

CALGON CARBON CORPORATION

CLIENT: STANDARD

TITLE: BAYONET SEPTA, 6" DIA. 316LSS, 0.008" SLOT DETAILS

DWG. Size: B | SHEET No.: 1 OF 1 | SCALE: NTS

DWG. No.: 90060218 | REV.: 0

V:\2008\IX-08089.MHLL\Drawings\Piping\90060218_6in SEPTA x 0.008 Slot.dwg Jan 26, 2009 - 3:10pm

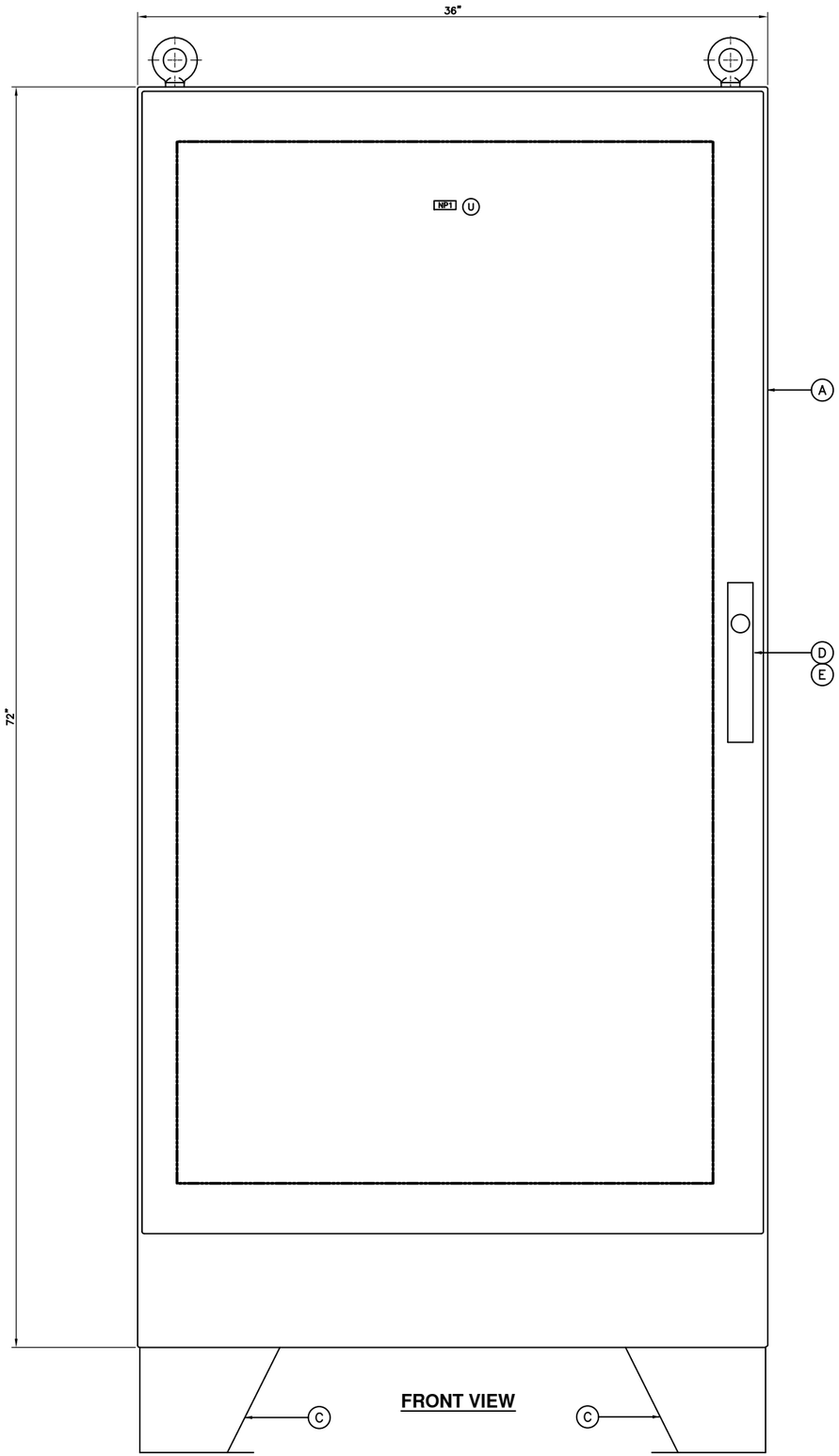

FRONT VIEW

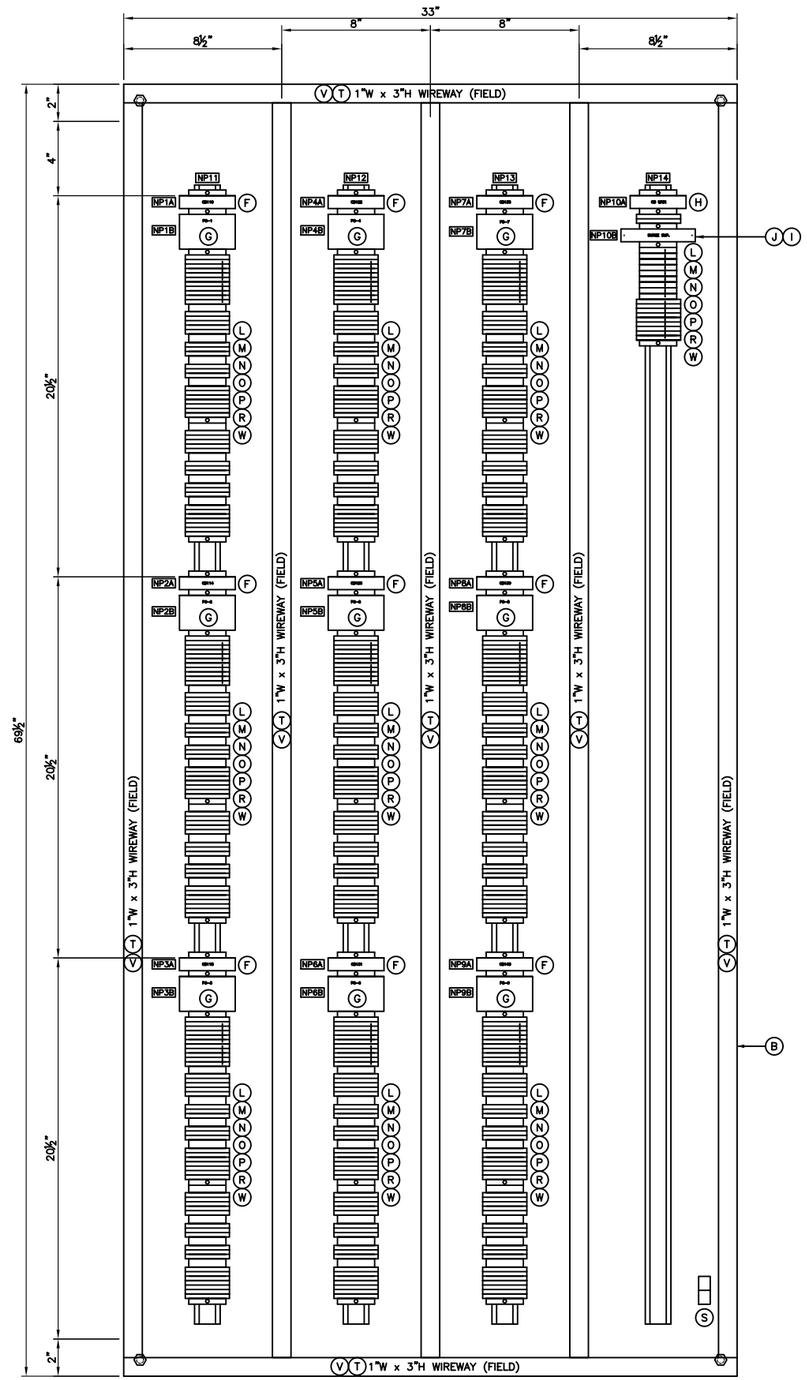

SUBPANEL

BILL OF MATERIAL

ITEM	QTY	DESCRIPTION
A	1 EA	ENCLOSURE, 20"Hx20"Wx8"D, NEMA 4X, 316L STAINLESS STEEL HOFFMAN #A20H2008SS6LP
B	1 EA	SUBPANEL, 17"Hx17"W, STEEL HOFFMAN #A20P20
C	1 EA	PANEL FLOOR KIT SAGINAW #SCE-FK0624
D	1 EA	PANEL 3 PT DOOR ROD KIT SAGINAW #SCE-3PTL
E	1 EA	PANEL DOOR HANDLE SAGINAW #SCE-PCH5
F	9 EA	CIRCUIT BREAKER, SINGLE POLE, 2 AMP A-B #1489-AIC020
G	9 EA	POWER SUPPLY 24VDC 4.2 AMP SOLA #SDP4-24-100RT
H	1 EA	CIRCUIT BREAKER, SINGLE POLE, 30 AMP A-B #1489-AIC300
I	1 EA	SURGE SUPPRESSOR PLUG, 120VAC PHOENIX #2807586
J	1 EA	SURGE SUPPRESSOR BASE PHOENIX #2817738
K	72 EA	FUSE HOLDERS A-B #1492-WFB424
L	435 EA	TERMINAL BLOCK, 600V, 30A, #22-10 AWG WIRE ALLEN-BRADLEY #1492-J4
M	10 EA	TERMINAL BLOCK, GROUND BLOCK, #22-10 AWG WIRE ALLEN-BRADLEY #1492-JG4
N	7 EA	TERMINAL BLOCK, DIN RAIL, 1 METER, STEEL ALLEN-BRADLEY #199-DR1
O	45 EA	TERMINAL BLOCK, END ANCHOR ALLEN-BRADLEY #1492-EAJ35
P	10 EA	TERMINAL BLOCK, SNAP-IN MARKER CARD (120/CARD) ALLEN-BRADLEY #1492-M6X12
Q		NOT USED
R	50 EA	TERMINAL BLOCK, END BARRIER ALLEN-BRADLEY #1492-EBJ3
S	1 EA	GROUND LUG PANDUIT #LAMA-1/0-14-0
T	6 EA	WIRING DUCT, 1"Wx3"H, GRAY VINYL, WITH COVER, 6 FT. LG. PANDUIT #G1X3LG6
U	1 EA	NAMEPLATES, LAMACOID, BLACK LETTERS ON WHITE BACKGROUND TEXT AS SHOWN ON DWG. 91085626 SHT. 2
V	6 EA	WIRING DUCT, GRAY VINYL COVER, 6 FT. LG. PANDUIT #C1LG6
W	20 EA	CENTER JUMPERS ALLEN-BRADLEY #1492-CJJ6-10

NOTES:

1. FOR NAMEPLATE ENGRAVING SEE DWG. 91085625 SH. 3.
2. ALL INTERNAL PANEL WIRING TO HAVE WIRE NUMBER LABELS AT BOTH ENDS OF THE WIRE.

REV	DESCRIPTION	APP	DATE
A	ISSUED FOR SUBMITTAL	XXX	01/29/09

REVISIONS

TOLERANCES (unless otherwise specified)

ANGULAR	±0°30'	DECIMAL (2 PLACES)	±.010
FRACTIONAL	±1/16"	DECIMAL (3 PLACES)	±.005
DECIMAL (1 PLACE)	±.015	DECIMAL (4 PLACES)	±.0005

THIS DRAWING AND DESIGN IS THE PROPERTY OF CALGON CARBON CORPORATION AND IS NOT TO BE REPRODUCED IN WHOLE OR IN PART NOR EMPLOYED FOR ANY PURPOSE OTHER THAN SPECIFICALLY PERMITTED IN WRITING BY CALGON CARBON CORPORATION. THIS DRAWING LOANED SUBJECT TO RETURN ON DEMAND.

	NAME	DATE
DRAFTER	DRC	01/21/09
DESIGNER	DRC	01/21/09
CHECKER	SJS	XX/XX/XX
APPROVAL		
PROJECT No.	IX-08089.MHLL	

CALGON

CALGON CARBON CORPORATION

CLIENT: MONK HILLS WELS PASADENA, CA

TITLE: MODEL 12 MODULAR ADSORBER SYS. FILTER CELL CONTROL PANEL GENERAL ARRANGEMENT

DWG. Size: D | SHEET No.: 1 OF 3 | SCALE: NTS

DWG. No.: 91085626 | REV.: A

V:\2008\IX-08089.MHLL\Drawings\Electrical\91085625-CONTROL PNL.dwg Jan 30, 2009 - 10:59am

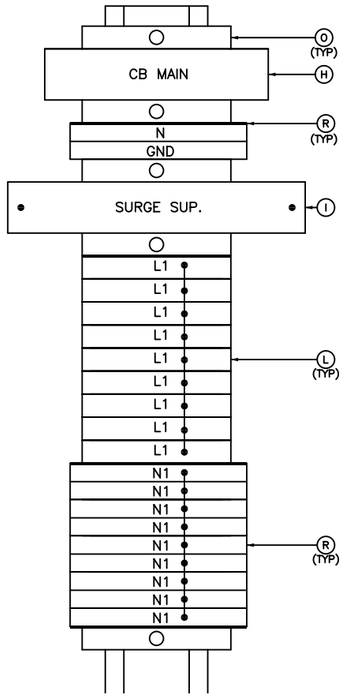

POWER DISTRIBUTION TERMINAL
MAIN ION EXCHANGE PANEL

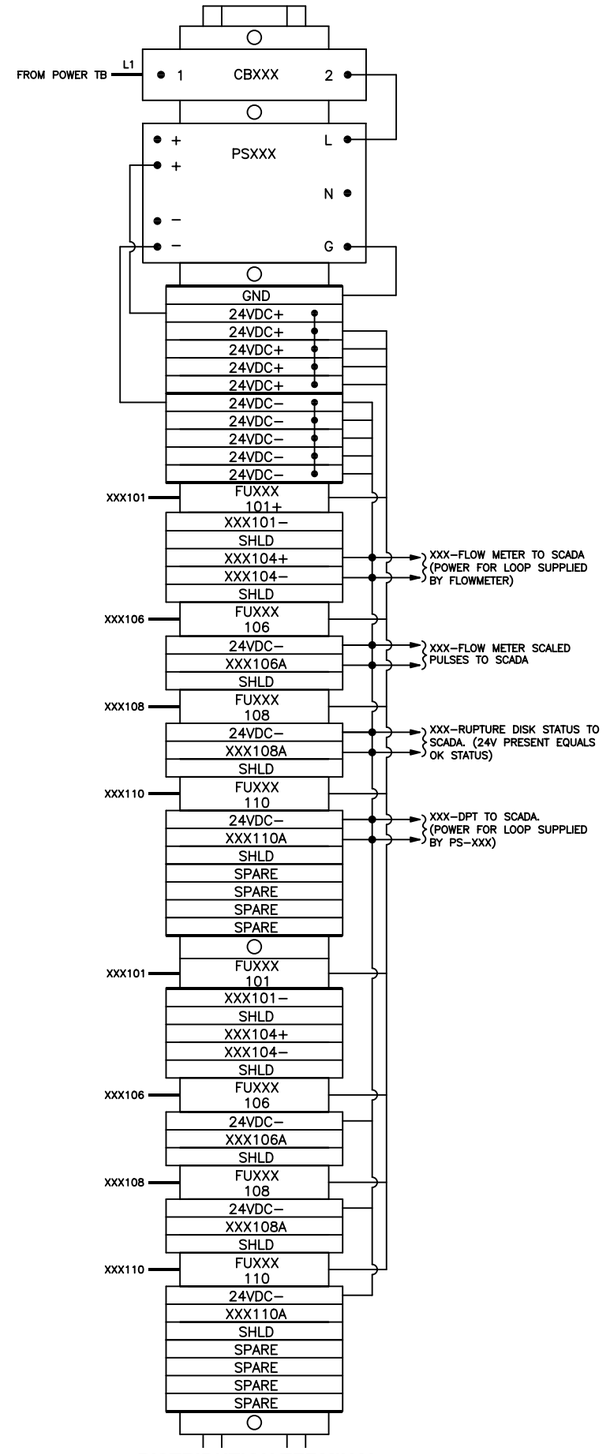

DISTRIBUTION TERMINAL
MAIN ION EXCHANGE PANEL

NOTES:

1. FOR FRONTVIEW & SUBPANEL ARRANGEMENT SEE DWG. 91085626 SH. 1.
2. TERMINAL BLOCKS AND FUSE BLOCKS TO HAVE MARKERS ON BOTH SIDES. TWO (2) PER TERMINAL AND PRINTED HORIZONTALLY.

REV	DESCRIPTION	APP	DATE
A	ISSUED FOR SUBMITTAL	XXX	01/29/09

REVISIONS

TOLERANCES (unless otherwise specified)

ANGULAR	±0°30'	DECIMAL (2 PLACES)	±.010
FRACTIONAL	±1/16"	DECIMAL (3 PLACES)	±.005
DECIMAL (1 PLACE)	±.015	DECIMAL (4 PLACES)	±.0005

THIS DRAWING AND DESIGN IS THE PROPERTY OF CALGON CARBON CORPORATION AND IS NOT TO BE REPRODUCED IN WHOLE OR IN PART NOR EMPLOYED FOR ANY PURPOSE OTHER THAN SPECIFICALLY PERMITTED IN WRITING BY CALGON CARBON CORPORATION. THIS DRAWING LOANED SUBJECT TO RETURN ON DEMAND.

	NAME	DATE
DRAFTER	DRC	01/21/09
DESIGNER	DRC	01/21/09
CHECKER	SJS	XX/XX/XX
APPROVAL		

CALGON

CALGON CARBON CORPORATION

CLIENT: MONK HILLS WELS PASADENA, CA

TITLE: MODEL 12 MODULAR ADSORBER SYS. FILTER CELL CONTROL PANEL GENERAL ARRANGEMENT

DWG. Size: D | SHEET No.: 2 OF 3 | SCALE: NTS

MAIN ION EXCHANGE PANEL

NAMEPLATE ENGRAVING				
ITEM	QTY	ENGRAVING LINE 1	ENGRAVING LINE 2	LETTER SIZE–BACKGROUND SIZE
NP1	1	MAIN ION	EXCHANGE PANEL	1/4" – 1" X 6"
NP1A	1	CB–1	2AMP	5/32" – 1/2" X 2"
NP1B	1	PS–1	24 VDC PWR SUP	5/32" – 1/2" X 2"
NP2A	1	CB–2	2AMP	5/32" – 1/2" X 1"
NP2B	1	PS–2	24 VDC PWR SUP	5/32" – 1/2" X 1"
NP3A	1	CB–3	2AMP	5/32" – 1/2" X 2"
NP3B	1	PS–3	24 VDC PWR SUP	5/32" – 1/2" X 2"
NP4A	1	CB–4	2AMP	5/32" – 1/2" X 2"
NP4B	1	PS–4	24 VDC PWR SUP	5/32" – 1/2" X 2"
NP5A	1	CB–5	2AMP	5/32" – 1/2" X 2"
NP5B	1	PS–5	24 VDC PWR SUP	5/32" – 1/2" X 2"
NP6A	1	CB–6	2AMP	5/32" – 1/2" X 2"
NP6B	1	PS–6	24 VDC PWR SUP	5/32" – 1/2" X 2"
NP7A	1	CB–7	2AMP	5/32" – 1/2" X 2"
NP7B	1	PS–7	24 VDC PWR SUP	5/32" – 1/2" X 2"
NP8A	1	CB–8	2AMP	5/32" – 1/2" X 2"
NP8B	1	PS–8	24 VDC PWR SUP	5/32" – 1/2" X 2"
NP9A	1	CB–9	2AMP	5/32" – 1/2" X 2"
NP9B	1	PS–9	24 VDC PWR SUP	5/32" – 1/2" X 2"
NP10A	1	MAIN BREAKER	30AMP	5/32" – 1/2" X 2"
NP10B	1	SURGE	SUPP	5/32" – 1/2" X 2"
NP11	1	DT–1	24 VDC	5/32" – 1/2" X 2"
NP12	1	DT–2	24 VDC	5/32" – 1/2" X 2"
NP13	1	DT–3	24 VDC	5/32" – 1/2" X 2"
NP14	1	PT–1	120 VAC	5/32" – 1/2" X 2"

NOTES:

1. FOR FRONT VIEW & SUBPANEL ARRANGEMENT SEE DWG. 91085626 SH. 1.
2. NAMEPLATES TO BE LAMACOID WHITE BACKGROUND WITH ADHESIVE BACKING. LETTERS TO BE BLACK CENTERED VERTICALLY AND HORIZONTALLY.

THIS DRAWING AND DESIGN IS THE PROPERTY OF CALGON CARBON CORPORATION AND IS NOT TO BE REPRODUCED IN WHOLE OR IN PART NOR EMPLOYED FOR ANY PURPOSE OTHER THAN SPECIFICALLY PERMITTED IN WRITING BY CALGON CARBON CORPORATION. THIS DRAWING LOANED SUBJECT TO RETURN ON DEMAND.

	NAME	DATE
DRAFTER	DRC	01/21/09
DESIGNER	DRC	01/21/09
CHECKER	SJS	XX/XX/XX
APPROVAL		
PROJECT No.	IX–08089.MHLL	

REV	DESCRIPTION	APP	DATE
A	ISSUED FOR SUBMITTAL	XXX	01/29/09

REVISIONS

TOLERANCES (unless otherwise specified)

ANGULAR	±0°30'	DECIMAL (2 PLACES)	±.010
FRACTIONAL	±1/16"	DECIMAL (3 PLACES)	±.005
DECIMAL (1 PLACE)	±.015	DECIMAL (4 PLACES)	±.0005

CALGON

CALGON CARBON CORPORATION

CLIENT: MONK HILLS WELS PASADENA, CA

TITLE: MODEL 12 MODULAR ADSORBER SYS. FILTER CELL CONTROL PANEL GENERAL ARRANGEMENT

DWG. Size: D | SHEET No.: 3 OF 3 | SCALE: NTS

DWG. No.: 91085626 | REV.: A

V:\2008\IX-08089.MHLL\Drawings\Electrical\91085625-CONTROL PNL.dwg Jan 30, 2009 - 10:59am

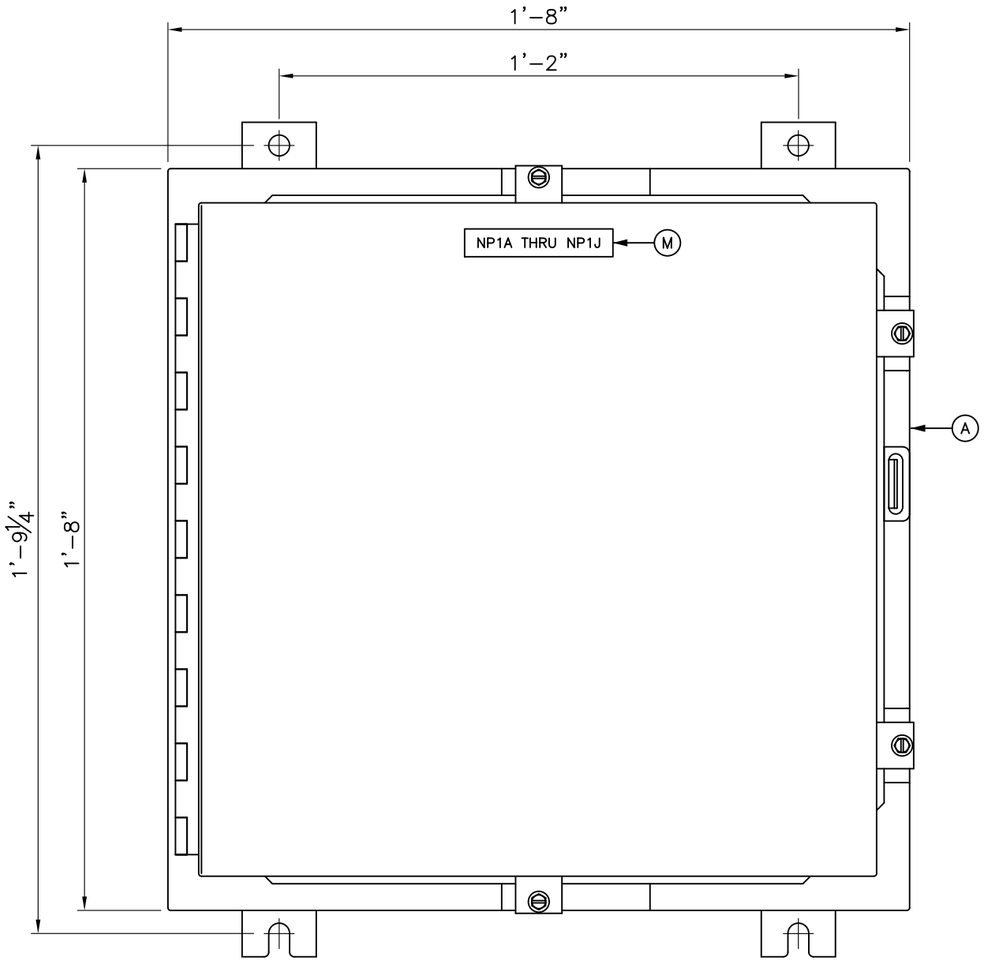

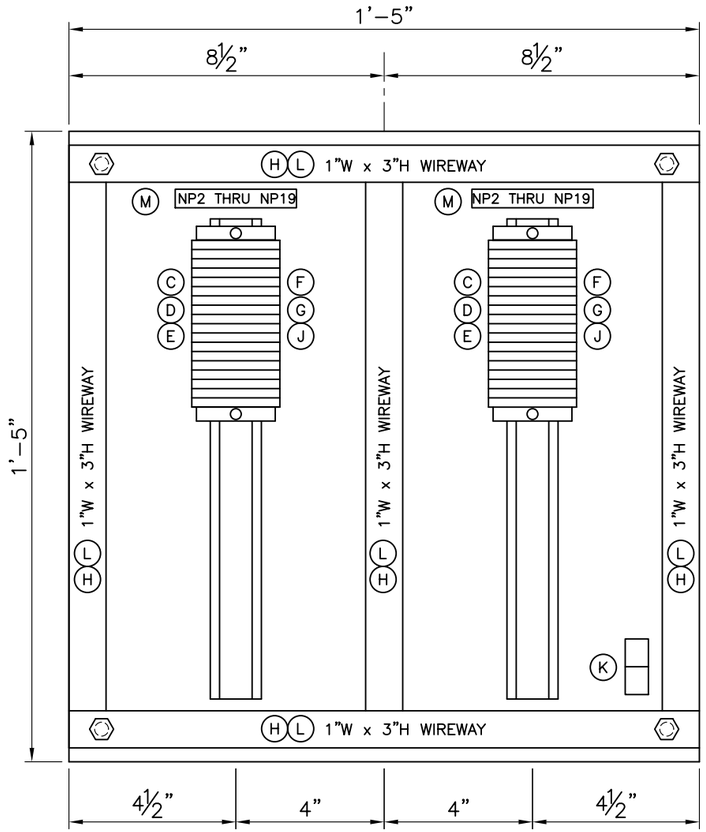

BILL OF MATERIAL

ITEM	QTY	DESCRIPTION
A	1 EA	ENCLOSURE, 20"Hx20"Wx8"D, NEMA 4X, 316L STAINLESS STEEL HOFFMAN #A20H2008SS6LP
B	1 EA	SUBPANEL, 17"Hx17"W, STEEL HOFFMAN #A20P20
C	34 EA	TERMINAL BLOCK, 600V, 30A, #22-10 AWG WIRE ALLEN-BRADLEY #1492-J4
D	2 EA	TERMINAL BLOCK, GROUND BLOCK, #22-10 AWG WIRE ALLEN-BRADLEY #1492-JG4
E	1 EA	TERMINAL BLOCK, DIN RAIL, 1 METER, STEEL ALLEN-BRADLEY #199-DR1
F	4 EA	TERMINAL BLOCK, END ANCHOR ALLEN-BRADLEY #1492-EAJ35
G	1 EA	TERMINAL BLOCK, SNAP-IN MARKER CARD (120/CARD) ALLEN-BRADLEY #1492-M6X12
H	2 EA	WIRING DUCT, 1"Wx6', GRAY VINYL COVER, 6 FT. LG. PANDUIT #C1LG6
J	4 EA	TERMINAL BLOCK, END BARRIER ALLEN-BRADLEY #1492-EBJ3
K	1 EA	GROUND LUG PANDUIT #LAMA-1/0-14-0
L	2 EA	WIRING DUCT, 1"Wx3"H, GRAY VINYL, WITH COVER, 6 FT. LG. PANDUIT #G1X3LG6
M	3 EA	NAMEPLATES, LAMACOID, BLACK LETTERS ON WHITE BACKGROUND TEXT AS SHOWN ON DWG. 91085626 SHT. 2

NOTES: (SEE DWG 91085626 SHEET 2)

1. ON JUNCTION BOX 1, PANEL DOOR ITEM Ⓜ USE DWG 91085626, SHT.2, BOM# NPIA. ON JUNCTION BOX 1 SUBPANEL ITEM Ⓟ USE DWG 91085626, SHT 2, BOM# NP2 FOR LEFT SIDE AND NP3 FOR RIGHT SIDE.

2. ON JUNCTION BOX 2, PANEL DOOR ITEM Ⓜ USE DWG 91085626, SHT.2, BOM# NPIB. ON JUNCTION BOX 1 SUBPANEL ITEM Ⓟ USE DWG 91085626, SHT 2, BOM# NP4 FOR LEFT SIDE AND NP5 FOR RIGHT SIDE.

3. ON JUNCTION BOX 3, PANEL DOOR ITEM Ⓜ USE DWG 91085626, SHT.2, BOM# NPIC. ON JUNCTION BOX 1 SUBPANEL ITEM Ⓟ USE DWG 91085626, SHT 2, BOM# NP6 FOR LEFT SIDE AND NP7 FOR RIGHT SIDE.

4. ON JUNCTION BOX 4, PANEL DOOR ITEM Ⓜ USE DWG 91085626, SHT.2, BOM# NPID. ON JUNCTION BOX 1 SUBPANEL ITEM P USE DWG 91085626, SHT 2, BOM# NP8 FOR LEFT SIDE AND NP9 FOR RIGHT SIDE.

5. ON JUNCTION BOX 5, PANEL DOOR ITEM Ⓜ USE DWG 91085626, SHT.2, BOM# NPIE. ON JUNCTION BOX 1 SUBPANEL ITEM Ⓟ USE DWG 91085626, SHT 2, BOM# NP10 FOR LEFT SIDE AND NP11 FOR RIGHT SIDE.

6. ON JUNCTION BOX 6, PANEL DOOR ITEM Ⓜ USE DWG 91085626, SHT.2, BOM# NPIF. ON JUNCTION BOX 1 SUBPANEL ITEM Ⓟ USE DWG 91085626, SHT 2, BOM# NP12 FOR LEFT SIDE AND NP13 FOR RIGHT SIDE.

7. ON JUNCTION BOX 7, PANEL DOOR ITEM Ⓜ USE DWG 91085626, SHT.2, BOM# NPIG. ON JUNCTION BOX 1 SUBPANEL ITEM Ⓟ USE DWG 91085626, SHT 2, BOM# NP14 FOR LEFT SIDE AND NP15 FOR RIGHT SIDE.

8. ON JUNCTION BOX 8, PANEL DOOR ITEM Ⓜ USE DWG 91085626, SHT.2, BOM# NPIH. ON JUNCTION BOX 1 SUBPANEL ITEM P USE DWG 91085626, SHT 2, BOM# NP16 FOR LEFT SIDE AND NP17 FOR RIGHT SIDE.

9. ON JUNCTION BOX 9, PANEL DOOR ITEM Ⓜ USE DWG 91085626, SHT.2, BOM# NPIJ. ON JUNCTION BOX 1 SUBPANEL ITEM P USE DWG 91085626, SHT 2, BOM# NP18 FOR LEFT SIDE AND NP19 FOR RIGHT SIDE.

REV	DESCRIPTION	APP	DATE
A	ISSUED FOR SUBMITTAL	XXX	XX/XX/XX

REVISIONS

TOLERANCES (unless otherwise specified)

ANGULAR	±0°30'	DECIMAL (2 PLACES)	±.010
FRACTIONAL	±1/16"	DECIMAL (3 PLACES)	±.005
DECIMAL (1 PLACE)	±.015	DECIMAL (4 PLACES)	±.0005

THIS DRAWING AND DESIGN IS THE PROPERTY OF CALGON CARBON CORPORATION AND IS NOT TO BE REPRODUCED IN WHOLE OR IN PART NOR EMPLOYED FOR ANY PURPOSE OTHER THAN SPECIFICALLY PERMITTED IN WRITING BY CALGON CARBON CORPORATION. THIS DRAWING LOANED SUBJECT TO RETURN ON DEMAND.

	NAME	DATE
DRAFTER	DRC	01/21/09
DESIGNER	DRC	01/21/09
CHECKER	SJS	XX/XX/XX
APPROVAL		
PROJECT No.	IX-08089.MHLL	

CALGON

CALGON CARBON CORPORATION

CLIENT: MONK HILL WELLS
PASADENA, CA

TITLE: MODEL 12 MODULAR ADSORBER SYS.
FILTER CELL CONTROL PANEL
GENERAL ARRANGEMENT

DWG. Size: D | SHEET No.: 1 OF 2 | SCALE: NTS

DWG. No.: 91085626 | REV.: A

V:\2008\IX-08089.MHLL\Drawings\Electrical\91085626-JUNCTION BOX.dwg Jan 30, 2009 - 11:00am

JUNCTION BOX
ELECTRICAL SCHEMATIC

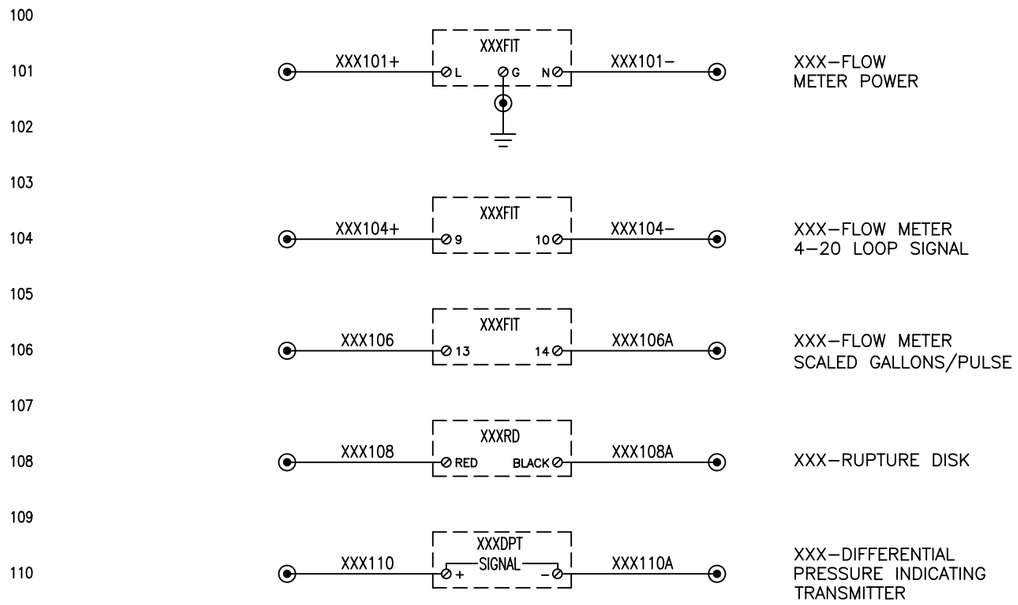

NOTE:

1. DASHED LINES INDICATED FIELD DEVICES.

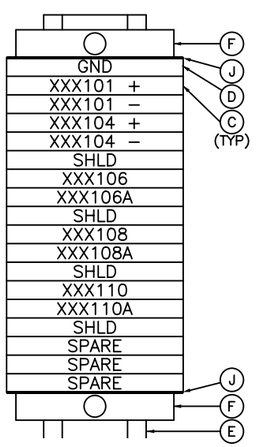

TERMINAL BLOCK ARRANGEMENT
(TYPICAL FOR 9 PANELS)

NOTE:

TERMINAL BLOCKS TO HAVE MARKERS ON BOTH SIDES. TWO (2) PER TERMINAL AND PRINTED HORIZONTALLY.

FILTER CELL CONTROL PANELS

NAMEPLATE ENGRAVING

ITEM	QTY	ENGRAVING LINE 1	ENGRAVING LINE 2	LETTER SIZE–BACKGROUND SIZE
NP1A	1	IX1 & IX2	FILTER CELL CONTROL PANEL	3/16" – 3/4" X 4"
NP1B	1	IX3 & IX4	FILTER CELL CONTROL PANEL	3/16" – 3/4" X 4"
NP1C	1	IX5 & IX6	FILTER CELL CONTROL PANEL	3/16" – 3/4" X 4"
NP1D	1	IX7 & IX8	FILTER CELL CONTROL PANEL	3/16" – 3/4" X 4"
NP1E	1	GAC1 & GAC2	FILTER CELL CONTROL PANEL	3/16" – 3/4" X 4"
NP1F	1	GAC3 & GAC4	FILTER CELL CONTROL PANEL	3/16" – 3/4" X 4"
NP1G	1	GAC5 & GAC6	FILTER CELL CONTROL PANEL	3/16" – 3/4" X 4"
NP1H	1	GAC7 & GAC8	FILTER CELL CONTROL PANEL	3/16" – 3/4" X 4"
NP1J	1	GAC9 & GAC10	FILTER CELL CONTROL PANEL	3/16" – 3/4" X 4"
NP2	1	TBIX1		5/32" – 1/2" X 2"
NP3	1	TBIX2		5/32" – 1/2" X 2"
NP4	1	TBIX3		5/32" – 1/2" X 2"
NP5	1	TBIX4		5/32" – 1/2" X 2"
NP6	1	TBIX5		5/32" – 1/2" X 2"
NP7	1	TBIX6		5/32" – 1/2" X 2"
NP8	1	TBIX7		5/32" – 1/2" X 2"
NP9	1	TBIX8		5/32" – 1/2" X 2"
NP10	1	TBGAC1		5/32" – 1/2" X 2"
NP11	1	TBGAC2		5/32" – 1/2" X 2"
NP12	1	TBGAC3		5/32" – 1/2" X 2"
NP13	1	TBGAC4		5/32" – 1/2" X 2"
NP14	1	TBGAC5		5/32" – 1/2" X 2"
NP15	1	TBGAC6		5/32" – 1/2" X 2"
NP16	1	TBGAC7		5/32" – 1/2" X 2"
NP17	1	TBGAC8		5/32" – 1/2" X 2"
NP18	1	TBGAC9		5/32" – 1/2" X 2"
NP19	1	TBGAC10		5/32" – 1/2" X 2"

NAMEPLATE NOTES:

1. NAMEPLATES TO BE LAMACOID WHITE BACKGROUND WITH ADHESIVE BACKING. LETTERS TO BE BLACK CENTERED VERTICALLY AND HORIZONTALLY.
2. FOR FRONT VIEW, SUBPANEL & BILL OF MATERIAL, SEE DWG. 91085626 SH. 1.

REV	DESCRIPTION	APP	DATE
A	ISSUED FOR SUBMITTAL	XXX	01/29/09

REVISIONS

TOLERANCES (unless otherwise specified)

ANGULAR	±0°30'	DECIMAL (2 PLACES)	±.010
FRACTIONAL	±1/16"	DECIMAL (3 PLACES)	±.005
DECIMAL (1 PLACE)	±.015	DECIMAL (4 PLACES)	±.0005

THIS DRAWING AND DESIGN IS THE PROPERTY OF CALGON CARBON CORPORATION AND IS NOT TO BE REPRODUCED IN WHOLE OR IN PART NOR EMPLOYED FOR ANY PURPOSE OTHER THAN SPECIFICALLY PERMITTED IN WRITING BY CALGON CARBON CORPORATION. THIS DRAWING LOANED SUBJECT TO RETURN ON DEMAND.

	NAME	DATE
DRAFTER	DRC	01/21/09
DESIGNER	DRC	01/21/09
CHECKER	SJS	XX/XX/XX
APPROVAL		
PROJECT No.	IX–08089.MHLL	

CALGON

CALGON CARBON CORPORATION

CLIENT: MONK HILLS WELLS PASADENA, CA

TITLE: MODEL 12 MODULAR ADSORBER SYS. FILTER CELL CONTROL PANEL GENERAL ARRANGEMENT

DWG. Size: D | SHEET No.: 2 OF 2 | SCALE: NTS

DWG. No.: 91085626 | REV.: A

V:\2008\IX–08089.MHLL\Drawings\Electrical\91085626–JUNCTION BOX.dwg Jan 30, 2009 – 11:00am

Appendix K
Design Influent and Effluent Chemical Concentrations

SECTION 1

SYSTEM DESCRIPTION

1.0 OVERVIEW

The system is designed to treat 7,000 gpm of well water for Perchlorate (ClO_4), Trichloroethene (TCE), Tetrachloroethylene (PCE), 1,2-Dichloroethane (1,2-DCA), Carbon Tetrachloride (CCl_4) and 1,2,3 – Trichloropropane (1,2,3-TCP).

Design Feed Water Quality to Treatment System
(Per Table 1 of RFP)

Perchlorate	Nitrate	Sulfate	Chloride	Bicarbonate	TCE	PCE	1,2-DCA	CCl_4	1,2,3 -TCP
(ppb)	(ppm)	(ppm)	(ppm)	(ppm)	(ppb)	(ppb)	(ppb)	(ppb)	(ppb)
45	24	55	53	230	3.2	0.59	0.46	2.7	0.02

Design Treated Water Quality from Treatment System
(Per Table 1 of RFP)

Perchlorate	Nitrate	Sulfate	Chloride	Bicarbonate	TCE	PCE	1,2-DCA	CCl_4	1,2,3 -TCP
(ppb)	(ppm)	(ppm)	(ppm)	(ppm)	(ppb)	(ppb)	(ppb)	(ppb)	(ppb)
<4	36	60	60	NA	<0.5	<0.5	<0.5	<0.5	<0.005

The volatile organic contaminates will require a separate treatment sub-system (carbon) than the anions (ion exchange resin) to efficiently remove them from the well water to achieve the required treatment goals.

PERCHLORATE (CLO_4) REMOVAL SYSTEM

The water is treated for perchlorate prior to the VOC removal system. 6,300 - 7,000 gpm of the well water flow is passed through (3) 10 micron cartridge filters in parallel to remove sediment and particulates which may be discharged from the well pumps to prevent fouling and excessive pressure drop across the treatment systems. The well water is then directed and distributed between (4) fixed bed ion exchange systems. The ion exchange systems will be CCC Model 12 units, which consist of (2) 12' diameter vessels and the necessary piping, valves and other components required to operate them in a lead/lag configuration (series flow through first one resin bed and then the other) . Each vessel will contain single-use, ion exchange resin for perchlorate removal. The resin will become saturated with perchlorate over time. Once the lead resin bed has become saturated with perchlorate, the resin is

Appendix L
Details of the US Filter Treatment System

Lincoln Avenue Water Company
USFilter Ion Exchange Treatment System

SYSTEM SPECIFICATION SUMMARY: HP1220DS Hi-Flow System

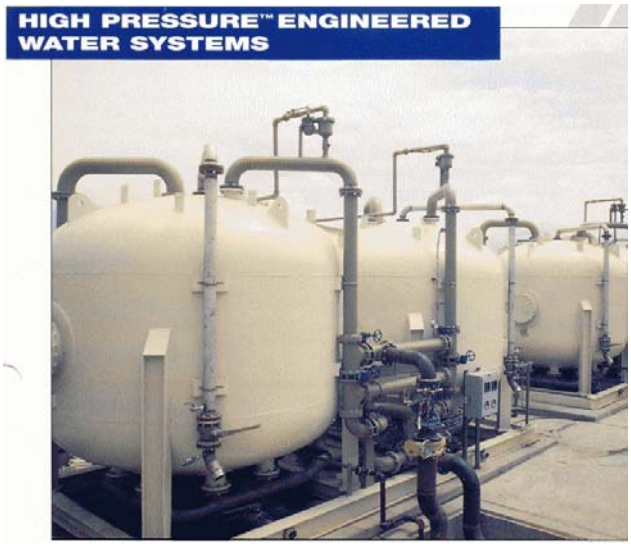

HP1220DS Hi Flow Ion Exchange Systems are designed to treat a wide range of contaminated process streams. All piping and valves are configured for series, parallel, or vessel isolation flows. System includes inlet and outlet piping, and backwash capabilities. The system consists of two vessels, skid mounted, with all piping, valves, and gauges assembled for ease of operation. The vessels are equipped with underdrains capable of maximum flow rate of 2400 GPM.

EACH VESSEL:

Vessel Diameter .....144”
Side Shell Height.....60”
Overall Height (Approx.) ..... …15’-4”
Working Pressure ..... 125 psi @ 150 °F
Manway:
    Flanged at side shell.....20”
    Elliptical type at head.....14” x 18”
Vessel Volume .....7,520 gal.
Vessel Resin Capacity.....300 Ft^3
Maximum Flow .....2,400 GPM
Nominal Flow.....2,000 GPM
Design Criteria ..... ASME
Code Stamping ..... YES
Material .....Carbon Steel
Supports..... Wide Flange Legs
Lifting..... Lifting Lugs
Siesmic ..... Zone 4
Interior Surface Prep SSPC-SP5
Interior Surface Coating .....Plasite 4110 35 mil dft min
Exterior Surface Primer.....Carboline 893 Rust Preventative Epoxy 3 mil min dft
Exterior Surface Coating.....Carboline 134 High Solids Urethane 3mil min dft
Standard Color.....Blue (Federal Standard 15052)

UNDERDRAINS:

Hub Lateral Design ..... Stainless Steel
Resin Screens .....304L Stainless Steel V-Wire Screens 1 ½" Dia

VALVE ASSEMBLY AND PIPING:

Piping:

Process Piping..... 12" Schedule 40 Carbon Steel
Resin Transfer Piping .....4" Sch 10 304L Stainless Steel

Valves:

Process.....12" Butterfly, Cast Iron Body w/AL-Brnz Disk, Gear Operator
Resin Transfer ..... 4" Fanged 316 Stainless Steel Ball Valve
Vent/Wash.....2"Bronze Apollo Ball Valve
Sample Ports (3).....1/2"Bronze Apollo Ball Valve

SYSTEM WEIGHT:

System Shipping weight..... 40,000 lb
System Resin Weight ..... 40,000 lb
Operating Weight ..... 190,000 lb

ION EXCHANGE FOR PERCHLORATE REMOVAL (USFILTER SUMMARY)

USFILTER EXPERIENCE WITH PERCHLORATE REMOVAL

Through its North American Technology Center and Development Council, USFilter's team of experts are developing and implementing new solutions to solve the world's most daunting water challenges. The company owns or licenses more than 3,000 active patents worldwide and continues to develop technologies for the future at the rate of more than two patents per week. Worldwide, the company invests more than $50 million a year on research and development.

USFilter started to develop solutions to the perchlorate problem in California in the late 90's. We established a dedicated team to look at various methods to treat this water contaminant. The USFilter team incorporated people from our operations, research, construction, field application engineering, and marketing groups across multiple product lines. Two existing technologies emerged from this team's work along with a promising third technology from research efforts:

- Fluidized Bed Reactors
- Once Through Media – Ion Exchange Resin
- Once Through Media – Tailored Carbon

Two of these technologies have been approved by the California Department of Health Services (CA DHS) for the removal of perchlorate from drinking water (Fluidized Bed Reactors and Ion Exchange). The third (Tailored Carbon) will be submitted shortly for approval by the CA DHS.

USFilter found that both approved technologies would produce water quality of a level that was below the California Action Limit (AL) for perchlorate. Our studies showed that the application of the ion exchange technology is dependent upon the level of perchlorate and the background anions present in the water. This is generally applied where the perchlorate influent concentration is <500 ppb. In keeping with maintaining "Good Environmental Stewardship", the once through ion exchange resin technology collects the perchlorate and then allows for destruction of the perchlorate through destruction of the ion exchange resins, thus eliminating the "Cradle to Grave" responsibility for this material. There is no brine generated nor is there the need for brine connection fees. And with the pending brine disposal restriction (and/or elimination) rules, the liability for the brine waste material is eliminated.

The Fluidized Bed Reactor (FBR) technology has been applied in Northern California for the past four years, where significant (ppm) levels of perchlorate have been found in the groundwater. This technology consistently maintained perchlorate concentrations that were less than 1 ppb in the treated effluent.

We are recommending the use of ion exchange resin for Lincoln Avenue Water Company (LAWC). Further, we have selected the one time use resin as our technology of choice for perchlorate removal for potable water, since it provides significant advantage over on site regeneration technologies; with the complete thermal destruction of the perchlorate ion as well as the elimination of a new waste stream in the form of spent brine regenerant.

In California, USFilter has been selected as the supplier of resin services to remove Perchlorate and nitrate from well sites for the following:

City of West San Bernardino	Perchlorate removal using on-site vessels. Product water used for municipal supply. DHS operating permit issued.

City of Rialto	Perchlorate removal using on-site vessels at the Chino #2 site. Product water used for municipal supply. DHS permit has been issued and the system went into operation on October 2nd, 2003 at 1500 GPM.
City of Morgan Hill	Two well sites wells for perchlorate removal using exchange units. Product water used for municipal supply. The resin is the same as being recommended for LAWC wells. A DHS permit is in the process of being issued.
West San Martin	Two well sites wells for perchlorate removal using exchange units. Product water used for municipal supply. The resin is also a non-nitrate sloughing resin. A DHS permit will be applied for this summer.
City of Fresno	Four well sites wells for nitrate removal using on-site fixed units and trailers. Product water used for municipal supply DHS permit issued.
Aerojet	Removal of high levels of Perchlorate in ground water for site remediation, using portable vessels. Product water used for groundwater replenishment. Environmental operating permit by State issued.
Shaw Environmental	Client Site remediation of Perchlorate using portable vessels.

FUTURE ABILITY TO SUPPLY RESIN AND EQUIPMENT

USFilter is in a unique position to assure that LAWC will receive resin and services now and in the future. We are a strong healthy company that is the single largest supplier of services and equipment for water treatment in the world. This is why cities such as Indianapolis, Atlanta, and Berlin, as well as local cities such as Burlingame, California and Richmond, California have signed long term operating contracts with USFilter over the next 20 years.

In addition we are the single largest purchaser of resins in the world and maintain close and direct relationships at a corporate level with the major suppliers including DOW, Rohm and Haas, and Purolite. In addition the consumption rate of perchlorate resin for these wells represents less than 2% of our current perchlorate resin consumption.

When you need us, whether it is this weekend or in ten years, we will be here.

ION EXCHANGE (IX) PROCESS DESCRIPTION

This section describes the design and operation of USFilter's proposed Perchlorate Ion Exchange (IX) System, the separate components, and their operations that comprise this system.

DESCRIPTION

We are proposing the following equipment for LAWC. This equipment option is designed to treat a nominal flow of 2,000 gpm of groundwater and will operate utilizing USFilter's HP1220™ ion exchange Hi-Flow vessels configured in lead / lag. The treatment system will have one

vessel in the lead working position and one vessel in the lag polishing position. There would be a total of one (1) lead vessel and one (1) lag vessel online at the well site. Each vessel is 12' in diameter and will be filled with NSF approved anion exchange resin in the chloride form, selected for optimum capacity of perchlorate removal. This is a tried, proven, and accepted technology for the removal of perchlorate from water.

Perchlorate concentrations leaving the vessels are monitored by routine sampling for breakthrough. The lead vessels will be changed when the product perchlorate has reached a level of 30% of the influent perchlorate level, or if the perchlorate level leaving the lag vessel exceeds 2 ppb. During an individual change, a lead vessel is taken off line. The vessel stays on-site and new, virgin resin is loaded into the vessel. The vessel containing the new resin is placed in the lag, polishing position. The former lag, polishing vessel is valved into the lead position. This ensures that the newest anion resin is always in the polishing position.

Testing for Perchlorate on the lead vessels will need to be performed on a routine basis. We are recommending a frequency of 7 days between tests after the initial performance-testing period has been completed. The testing of the perchlorate will be the responsibility of the client unless otherwise agreed to by client and USFilter.

Feedwater is fed to each vessel through the top, passes through anion NSF approved ion exchange resin, and leaves the vessel at the bottom (co-current flow). Perchlorate ions in the feedwater are replaced with chloride ions as the water passes through the bed. The spent resin from this process will be removed from the vessels and sent to a facility for destruction by fuel blending once the effluent perchlorate levels indicate that the resin has achieved a predetermined perchlorate saturation level.

The treated water flows to the customer's reservoir and then distribution system for use. This proposed system will maintain an effluent perchlorate level of <2 ppb.

INDIVIDUAL UNIT / COMPONENT OPERATION

The proposed IX system will use USFilter's HP 1220™ Hi-Flow ion exchange vessels configured in lead / lag. The system at the Lincoln Avenue Water well site will have one (1) vessels in the lead working position and one (1) vessels in the lag polishing position for a total of two (2) vessels online designed to produce a nominal flow rate of 2,000 gpm and is capable of a maximum flow rate of 2,400 gpm.

The system will produce and maintain a maximum product water perchlorate level of < 2 ppb as determined by EPA Method 314 for perchlorate analysis. Each of the vessels will hold 300 cubic feet of anion resin.

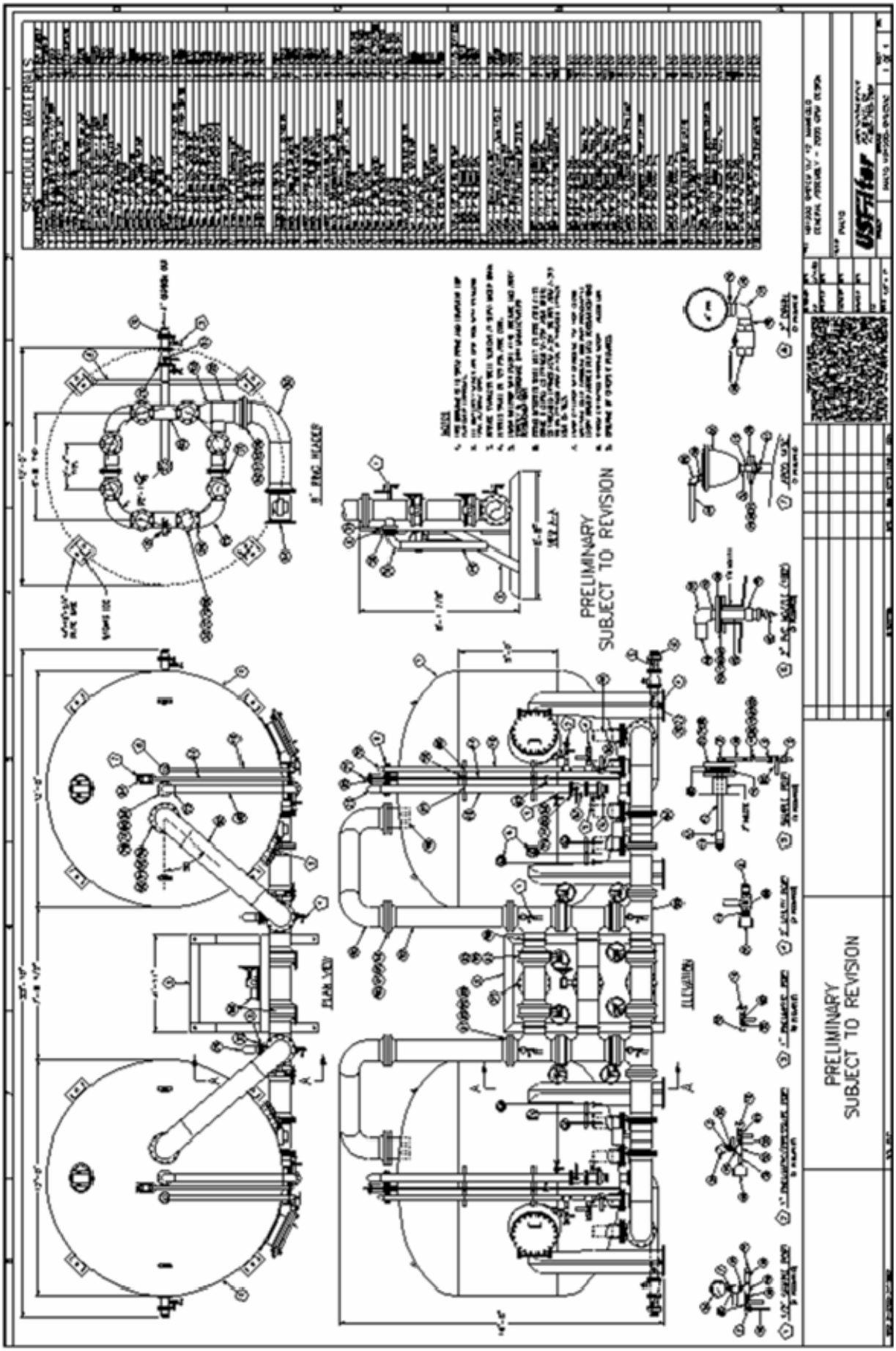
SCHEDULED MATERIALS
PLAN VIEW
ELEVATION
PRELIMINARY
SUBJECT TO REVISION
PRELIMINARY
SUBJECT TO REVISION

Appendix M
Additional Details on the Ion Exchange Resin

Rohm and Haas, Amberlite™ PWA2 Strongly Basic Anion Exchange Resin

DRAFT

ION EXCHANGE RESINS

AMBERLITE® PWA2

STRONGLY BASIC ANION EXCHANGE RESIN

Amberlite® PWA2 is a specially designed ion exchange resin for the selective removal of perchlorate from potable water, and as such, Amberlite PWA2 has been certified for potable water use according to NSF/ANSI standard 61 for drinking water system components (for material requirements only).

PROPERTIES	
Matrix	Polystyrene divinylbenzene copolymer
Physical form	Amber translucent beads
Ionic form as shipped	Chloride
Total exchange capacity	0.60 eq/l minimum (Cl^- form)
Shipping weight	42 lbs/ft^3

SUGGESTED OPERATING CONDITIONS

Optimum pH range	0 to14
Maximum operating temperature	140°F
Minimum bed depth	24 inches
Service flow rate	25 – 50 BV/hour

It is recommended that all potential users seek advice from Rohm and Haas Company to determine the optimum operating conditions.

SAFE HANDLING INFORMATION

Material Safety Data Sheets

Material Safety Data Sheets (MSDS) are available for all Rohm and Haas products. These sheets contain pertinent information that you may need to protect your employees and customers against any known health or safety hazards associated with our products.

We recommend that you obtain copies of our MSDS by calling 1-800-RH-AMBER before using our products in your facilities. We also suggest that you contact your suppliers of other materials recommended for use with our products for appropriate health and safety precautions before using them.

Caution: Acidic and basic regenerant solutions are corrosive and should be handled in a manner that will prevent eye and skin contact. In addition, the hazards of other organic solvents should be recognized and steps taken to control exposure.

Nitric acid and other strong oxidizing agents can cause explosive reactions when mixed with ion exchange resins. Proper design of process equipment to prevent rapid build up of pressure is necessary if use of an oxidizing agent such as nitric acid is contemplated. Before using strong oxidizing agents in contact with ion exchange resins, consult sources knowledgeable in the handling of these materials.

Note: Ion exchange resins and polymeric adsorbents, as produced, contain by-products resulting from the manufacturing process. The user must determine the extent to which organic by-products must be removed for any particular use and establish techniques to assure that the appropriate level of purity is achieved for that use. The user must ensure compliance with all prudent safety standards and regulatory requirements governing the application. Except where specifically otherwise stated, Rohm and Haas Company does not recommend its ion exchange resins or polymeric adsorbents as supplied as being suitable or appropriately pure for any particular use. Consult your Rohm and Haas technical representative for further information.

Amberlite is a trademark of Rohm and Haas Company, or of its subsidiaries or affiliates. The Company's policy is to register its trademarks where products designated thereby are marketed by the Company, its subsidiaries or affiliates.

These suggestions and data are based on information we believe to be reliable. They are offered in good faith, but without guarantee, as conditions and methods of use of our products are beyond our control. Rohm and Haas Company makes no warranties either express or implied. Rohm and Haas Company expressly disclaims any implied warranty of fitness for a particular purpose. We recommend that the prospective user determine the suitability of our materials and suggestions before adopting them on a commercial scale.

Suggestions for use of our products or the inclusion of descriptive material from patents and the citation of specific patents in this publication should not be understood as recommending the use of our products in violation of any patent of the Rohm and Haas Company.

© Rohm and Haas Company, 2003

DRAFT

International Headquarters and Laboratory
4151 Naperville Road Lisle, Illinois USA 60532-1088
Telephone 630 505 0160 Facsimile 630 505 9637

WATER QUALITY ASSOCIATION

CERTIFICATE OF VALIDATION

This is to certify that the drinking water system component herein has been independently tested and certified by the Water Quality Association in accordance with "Drinking Water System Components - Health Effects," NSF/ANSI-61-2002. The material safety of the component listed has earned the Gold Seal.

Manufacturer:	Rohm and Haas Company
Address:	100 Indepence Mall West Philadelphia, PA 19106-2399
Model:	Amberlite PWA2
Product Type:	Process Media
Size:	N/A
Water Contact Temp:	CLD 23
Water Contact Material:	SYN
Listing Notes:	Ion Exchange Resin
Initial Date:	Monday, September 08, 2003
Expiration Date:	Friday, August 29, 2008
Test Unit Number:	03087.001
Certificate Number:	CRT.080803.03087001.R1

Joseph F. Harrison

Joseph F. Harrison, P.E., CWS-VI

12 Sept. 2003

Date

Appendix N
O&M Plan for the LAWC Treatment System

OPERATIONS MANUAL FOR
LINCOLN AVENUE WATER COMPANY

2000 GPM ION EXCHANGE PERCHLORATE REMOVAL SYSTEM
(Manual Provided by USFilter)

1.0 INTRODUCTION

This manual covers a general description of the equipment and operating procedures for an Ion Exchange (IX) System. The Ion Exchange (IX) System is designed to provide many years of trouble free service. To achieve this, the IX System equipment must be properly handled and installed to obtain the desired results. Failure to do so can cause premature equipment malfunctions and/or undesirable System performance.

The Purchaser is fully responsible for proper inspection, handling, and installation of the IX System equipment, and shall insure that quality workmanship practices and construction procedures are followed throughout. The Purchaser also accepts all liability for the loss of or damage to any equipment resulting from the improper handling and/or installation, regardless of the inclusion or omission of any applicable suggestions in this manual. Unknown situations or conditions not covered in this manual are the responsibility of the Purchaser.

Section 1.4 provides helpful information for the receiving, unloading, handling and installation of the IX System equipment.

1.1 GLOSSARY

Adsorber - A vessel designed to hold ion exchange resin media.

Backwash - Performed prior to placing system on-line to cleanse the resin bed of fines entrapped air and stratify bed depth. Also used during normal operations to remove particulate build up.

Backflush - Performed during normal operations to remove entrapped air from the resin bed.

Bulk Transport Trailer - Hopper type trailer used to transport resin, slurry in fresh resin, and remove spent resin from adsorbers.

Ion Exchange- The removal of positively or negatively charges ions by way of resin media.

Lead Adsorber - The first bed of resin through which a process or a waste stream is passed. (Also called Primary Adsorber.)

Polishing Adsorber - The second or last bed of resin through which a process or a waste stream is passed. (Also called Secondary Adsorber.)

Pneumatic Port – The air and water connection for service and wash-down of vessel.

Pressure Port - The air and water connection for service and wash-down of vessel.

IX Resin System Rupture Disk **-** A relief disk to prevent over pressurization of a vessel.

Underdrain **-** Device designed to permit an evenly distributed flow of water but retain resin in vessel.

Utility Port **-** The air and water connection for service and wash-down of vessel.

Vent **-** A line from each adsorber with automatic vacuum/air release valve (APCO).

Water Cushion **-** The water added to an adsorber before charging it with resin to protect under drain and lining.

1.2 IMPORTANT MESSAGES AND WARNINGS

This Manual should be in the possession of the personnel who operate and maintain the IX System. The purpose of this manual is for instruction and to advise operators and maintenance personnel. This manual will remain a valuable resource for the safe, economical, efficient operation and maintenance of the IX System.

Failure to properly follow instructions, failure to take notice of warnings, and failure to take proper precautions and preventive measures may be dangerous and could cause serious injury, equipment damage, and environmental problems.

Mechanical modifications or substitutions of parts on equipment that may affect structural or operational safety shall not be made without prior manufacturer's approval or engineer's advice. Modifications other than those approved may defeat protective features originally designed into the equipment and its controls; and therefore, shall not be made.

Unauthorized personnel should be kept away from this equipment at all times. Only qualified personnel who have been properly instructed in this equipment's proper operation and maintenance requirements and in its potential hazards shall be allowed to operate and maintain it.

IMPORTANT

USFILTER MAKES NO WARRANTY OF ANY KIND WITH REGARD TO THE MATERIAL CONTAINED IN THIS MANUAL, INCLUDING, BUT NOT LIMITED TO, IMPLIED WARRANTIES OR FITNESS FOR A PARTICULAR PURPOSE. USFILTER SHALL NOT BE LIABLE FOR ERRORS CONTAINED HEREIN OR FOR INCIDENTAL OR CONSEQUENTIAL DAMAGES IN CONNECTION WITH THE PERFORMANCE OR USE OF THIS MATERIAL.

THIS MANUAL CONTAINS CERTAIN PROPRIETARY CRITERIA, IDEAS AND DESIGNS AS AN INSTRUMENT OR PROFESSIONAL SERVICE AND SHALL NOT BE REPRINTED IN WHOLE OR IN PART WITHOUT EXPRESSED WRITTEN AUTHORIZATION FROM USFILTER.

1.3 RECEIVING

Immediately upon receipt and prior to removal from the truck trailer, railcar or shipping container, inspect the IX System equipment for damage. Claiming any damage that may have occurred in transit should be filed promptly with the delivering carrier. The unloading operation should be delayed until the carrier's representative has completed his inspection of the damaged equipment, otherwise a damage claim may not be honored. The inspection should include as a minimum:

1. External surface damage.
2. Damage such as broken nozzles, valves, pipes, underdrain, etc.
3. Equipment damage at contact points.
4. Unpacking and inspection of all packaged equipment and accessories.
5. Internal lining.

1.4 UNLOADING AND HANDLING

When unloading and handling the IX System equipment, extreme care should be taken as not to damage it.

Regardless of the type of equipment being handled, certain precautionary measures must be implemented such as:

1. Insure the lifting equipment can withstand the total intended load.
2. Always use lifting eyes and brackets.
3. Never position the lifting equipment where damage to the equipment load may occur.
4. When using a forklift, make sure the forks are long enough to extend past the intended load. This prevents accidental punctures on the underside of the equipment crates, boxes and skids that may damage the equipment itself.
5. Use spreader bars.
6. Do not slide, drag or push equipment across surfaces. Always lift to move into position.
7. Do not roll, drop or throw equipment or accessories.
8. Lifting cables and/or straps must not be attached to, or permitted to come in contact with nozzles, flanges, gussets, pipes, shafts, painted surfaces, or any other accessory that may be damaged by contact.
9. When equipment is being lifted, proper rigging practices should be observed and a guide- line should be attached to prevent impact damage caused by swinging into contact with other object.
10. Never set on or roll over an equipment fitting and never use a fitting as a lifting point.
11. Prevent tools, hooks, etc. from striking the IX System equipment.

1.5 ASSEMBLY INSTRUCTIONS

The IX System has been shipped pre-assembled to the greatest extent possible. The attached drawing shows the system after assembly. The piping module skid and vessel skids have drilled holes for placement and mounting. The site foundation should be level, but most importantly flat. Check to see if any bolts that may have come loose during shipment, if so, tighten them. The internal nozzles have been shipped installed. Be sure to use proper flange tightening procedures when assembling the piping.

The IX System should be assembled in the following order:

1. Mark the foundation with guide-lines in order to place the vessels in a straight line.
2. Located the vessels spaced as shown on drawing.
3. Place the piping module appropriately between the face piping connections.
4. If alignment is off, make sure the vessels and piping module are level and in the correct positions. Some shimming of the vessels and piping module may be required.
5. Bolt Tank A to the piping module (bolt loosely until system is fully assembled).
6. Bolt Tank B to the piping module (bolt loosely until system is fully assembled).
7. If alignment is acceptable, tighten all the bolts.
8. Secure the vessels and piping module to the foundation.
9. Assembly is complete.

2.0 EQUIPMENT DESCRIPTION

2.1 GENERAL DESCRIPTION

The IX System consists of (2) two anion resin adsorber vessels, face piping, and piping module with support skid. The piping system comes complete with influent, effluent, backwash, air vent line, resin fill, resin removal, compressed air, and sampling connections.

The carbon steel adsorbers are vertical cylindrical pressure vessels with elliptical tops and bottoms manufactured for a maximum operating pressure of 150 PSIG. The adsorbers are designed for down flow operation with a specially designed underdrain collection system to maximize the utilization of resin as well as allow for efficient and rapid removal of the spent carbon. Three sample valves are used for sampling treated water at various levels through the adsorber.

The process and utility piping to operate the system are mounted on the adsorbers and piping module. The piping options include valving to operate both adsorbers in parallel or series (lead/lag) flow configuration. Each adsorber has its own resin fill, discharge and vent lines. The process piping is equipped with pressure gauges and sample ports at the inlet and outlet of each adsorber. Compressed air connections are provided for use during resin transfer.

2.2 PROCESS DESCRIPTION

The Ion Exchange System is designed to remove dissolved ionic compounds from contaminated feed water using anion exchange resin. The feed water to be treated will be pumped by the client at a controlled rate through the adsorbers in a series or parallel configuration.

Depending on the feed water analysis, a pre-filter may be required to remove any suspended solids from the feed water prior to entering the resin adsorbers.

Each adsorber shall contain 300 cubic ft. of USF anion resin, which will provide sufficient contact time at the design flow rate to remove the perchlorate in the feed water.

Feed water enters the adsorber from the top and flows down through the resin bed. The treated water is collected in the underdrain system.

When piped in the series configuration, and the lead adsorber becomes saturated (exhausted) it's taken off-line for replacement of the spent resin. The feed water is directed to the second adsorber, allowing the system to remain in service. The lead adsorber is then pressurized up to 30 psig with air. With the addition of utility water, the spent resin is pneumatically displaced as slurry to a bulk transport trailer. The dewatered spent resin is destroyed.

To refill the adsorber with fresh resin, the resin in the trailer is slurried, using clean water, pressurized up to 15 psig and then transferred to the empty adsorber.

Once the fresh resin is placed in the vessel, this vessel will become the lag vessel.

2.3 OPERATING CONDITIONS

The design operating conditions and characteristics for this system are as follows:

Maximum flow rate:	2,000 gpm per vessel
Superficial surface loading:	5.4 min per vessel @ 1,000 gpm
Maximum Pressure:	125 psig
Maximum Temperature:	150°F
Resin content:	300 cubic ft. per vessel
Resin Type:	USF select

2.4 GENERAL PROCESS COMMENTS

OPERATIONAL CHANGES

Optimum operation of the system is obtained if changes to the system occur slowly. Rapid changes in flow will cause upsets to the adsorbers, which could adversely affect the operation. Valves should be turned slowly at all times to prevent hydraulic shock.

3.0 START-UP

3.1 SAFETY

Any piece of equipment can be dangerous if operated improperly. Safety is ultimately the responsibility of those operating and maintaining the equipment. All personnel operating and maintaining the IX System and its proper implementation must be familiar with all of the Ion Exchange System components, and observe all OSHA, federal, state and local safety codes and requirements. The personnel should also be active participants in an approved plant-wide health and safety program.

Failure to properly follow instructions and failure to take proper safety precautions is dangerous and can cause serious personal injury, needless equipment damage, and unnecessary environmental harm. Mechanical modifications and/or substitutions of parts on equipment that will affect structural, operational, or environmental safety should not be made. Modifications that may defeat protective features originally designed into the equipment and control; and therefore, should not be made.

The following is a partial list of precautions to follow but in no case is the list exhaustive nor is it intended to be. Operators and maintenance personnel should expand on this list after first reviewing the entire IX System and its operation with the appropriate health and safety authorities.

- Keep areas clean. A clean work area is a much safer area.
- Keep all equipment guards in place. If removed to service the equipment, make sure the guards are replaced properly.
- Wear eye and face protection around rotating and pumping equipment and whenever working around or handling chemicals. Be especially cautions for splash when disconnecting piping, valves and fittings.
- Wear ear protection if necessary.
- Wear proper apparel. Do not wear loose clothing, or jewelry, which could be caught in machinery.
- Wear a proper respirator around chemicals and in areas where vapors and/or gases may be present.
- Non-skid footwear is recommended and always wear protective gloves when feasible.
- Remove adjusting screws or wrenches. Form a habit of checking to see that all tools are removed from equipment.
- Make sure all personnel are familiar with OSHA approved Material Safety Data Sheets for all hazardous materials they may come in contact with.

STAY ALERT

WATCH WHAT YOU ARE DOING

USE COMMON SENSE

DO NOT PERFORM OPERATION OR MAINTENANCE FUNCTIONS WHEN YOU ARE TIRED OR GROGGY

DO NOT ATTEMPT TO SERVICE OR OPERATE MACHINERY YOU ARE NOT FULLY FAMILIAR WITH

DO NOT TAKE CHANCES

ASK FOR ASSISTANCE IF IN DOUBT

DO NOT TRY TO DO IT ALONE

THINK BEFORE YOU ACT AND BE CAREFUL

NOTE:

ALL CONFINED SPACES, INCLUDING THOSE CONTAINING ION EXCHANGE RESINS, SHOULD BE PRESUMED TO BE HAZARDOUS. APPROPRIATE SAFETY MEASURES SHOULD ALWAYS BE TAKEN BEFORE ENTERING, AS WELL AS WHEN WORKERS ARE IN A CONFINED SPACE. OSHA REGULATIONS APPLICABLE TO RESPIRATORY PROTECTION IN OXYGEN-DEFICIENT ATMOSPHERES SHOULD BE STRICTLY FOLLOWED.

3.2 PLACING THE SYSTEM IN OPERATION

ADSORPTION SYSTEM START-UP, OPERATION IN SERIES

To put the adsorption system on-stream, the procedure is described below.

The feed to the adsorption system is provided by the user's feed pump. The pump must be started and brought up to operating conditions prior to placing the ion exchange adsorption system in operation. When this has been accomplished, the pump discharge valve is slowly opened. Initially, all valves in the adsorption system are closed.

Prior to placing the ion exchange system on-line, the valves to the system must be set to allow flow through the system as the feed water pump is brought on-line. The system is designed to allow both train (Train A or Train B) to be placed in the lead position and either train (Train A or Train B) to be placed in the lag position. When Train A is in the lead position, Train B must be in the lag position. When Train B is in the lead position, Train A must be in the lag position. This forms a double barrier for production of potable water and ensures that the newest Anion resin is put into the polishing application. The following table **Figure 1** outlines the valve positions depending on which train is in the lead position:

Figure 1	Train A (Lead) / Train B (Lag)		Train B (Lead) / Train A (Lag)	
Valves	Open Position	Close Position	Open Position	Close Position
V-100	X		X	
V-101	X			X
V-102		X	X	
V-103	X		X	
V-104	X		X	
V-105	X		X	
V-106	X		X	
V-107	X		X	
V-108	X		X	
V-109		X	X	
V-110	X			X
V-200		X		X
V-201		X	X	
V-202	X			X
V-203	X		X	
V-204	X		X	
V-205	X		X	
V-206	X		X	
V-207	X		X	
V-208	X		X	
V-209	X			X
V-210		X	X	

Once the valves are placed into position as per the table above, the system is ready for the initial start up. The customer's feed water pump provides water to the ion exchange system. The feed water pump must be started and brought up to operating condition. As water begins to flow through the system, the following sequences must be followed:

1. Allow water to enter into the lead vessel.

2. Manually vent air within the vessel through the vent valves.

3. Once no air is observed discharging through the vent valves (all water), slowly close the vent valves and Open Valve V-100.

4. Allow water to enter into the lag vessel.

5. Manually vent air within the vessel through the vent valves.

6. Once no air is observed discharging through the vent valves (all water), slowly close the vent valves and Open Valve V-200.

7. Refer to **Figure 1,** any DRAWINGS and the valve sequence tag located on the vessels for the desired valve sequence to put the system in operation, remembering to operate each valve slowly.

Normal operation requires no further changes until breakthrough occurs. When this happens, call the **USFILTER** Service Department at (800) 435-3223 to arrange for RESIN change-out.

3.6 BACKWASH

There will be no backwashing of these vessels. The application is a once through resin operation. Once resin is exhausted, it is replaced and disposed of by way of fuel blending.

3.7 SPENT RESIN REMOVAL

When the lead adsorber becomes saturated (exhausted) it is taken off-line for replacement of the spent resin. The feed water is directed to the second adsorber, allowing the system to remain in service. The lead adsorber is then pressurized up to 30 psig with air. With the addition of utility water, the spent resin is pneumatically displaced as slurry to a bulk transport trailer by slowly opening the slurry outlet valve. To remove the 300 cubic ft. of resin, approximately 9,000 gallons of water is required to keep the spent resin in slurry to facilitate removal. This will prevent a line clogging.

3.8 RESIN SLUICING PROCEDURE FOR NEW AND SPENT RESIN

This section describes the operations involved in the resin sluicing process that will be used at the Lincoln Avenue Water Company (LAWC) site. This well site will be treated by USFilter, for the LAWC. The treatment consists of Ion Exchange system for the removal of perchlorate. The system contains multiple tanks that will have their resin changed on a periodic basis.

OPERATIONS OVERVIEW

US Filter will be supplying the services and equipment for the exchange of resin from the tanks on site. The resin volume in each of the tanks is 300 cubic feet. The exchange of a resin bed will be triggered by the LAWC upon receiving laboratory analysis that indicates the resin has it a targeted breakpoint.

Upon notification by the LAWC that an exchange will need to take place US Filter will schedule the work from our Los Angeles service center. This service center is located at 1441 Washington Street in Los Angeles, California.

A truck / trailer combination configured for resin sluicing will leave the US Filter branch containing 300 cubic feet of virgin USF anion resin. The driver will proceed directly to the well site and back the truck into the well area for the exchange to occur. At that time the following operations will take place:

- The driver will check in with the LAWC staff to confirm which vessel will need the resin exchanged. This confirmation will be noted on the service order.
- The well system will be shut down and the Ion exchange Vessels isolated from the well system.
- The tank to be exchanged will be depressurized and vented to atmosphere.
- Using the media transfer line, the resin will be sluiced from the Ion Exchange Vessel to a holding tank.
- Once all the resin has been evacuated from the vessel the new resin will be transferred from the truck to the ion exchange vessel.
- The vessel will be closed and placed back on line.
- The US Filter Service Technician will wait 15 minutes to observe the vessel and observe that no leaks are occurring.
- We will remove the spent resin from the site and store the hoses for the next transfer.
- The driver will note the time and leave the site following the protocols for securing gates.

INDIVIDUAL COMPONENT DISCUSSION

Resin Transfer Truck

The resin transfer truck is a US Filter owned trailer that is operated under DOT regulations and meets those requirements. The unit is only used to haul resin that is used for potable water applications, pharmaceutical applications, or other equally high purity applications. It is a dedicated trailer that is never used for other media nor used to haul resins that have been used in waste stream applications.

Transfer Hoses

The connections between he truck and vessels will be made using food grade hoses that will follow the DHS accepted sanitization procedure established for the City of Fresno mobile ion exchange operation. Trailer connections are Goodyear PLICORD BREWLINE hoses. They have a maximum working pressure of 250 psi and are capable of handling temperatures from -40 to 220 F. The interior construction is white chlorobutyl rubber that conforms to FDA, USDA and 3-A Sanitary Standards and eliminates chance of taste or odor transfer. The hose is reinforced with 6 ply synthetic fabric, and the cover is white Versigard rubber that resists abrasion from dragging over rough, uneven surfaces.

Disinfection Procedure

The disinfectant kit is called Clean-Gear System, from the Lab Safety Supply Inc. After de-pressuring the equipment as needed, the Hoses can be disconnected from the trailer and prior to setting on the pad, each fitting is sprayed liberally with the disinfectant and placed in a sealed sterile plastic bag. Contact time is achieved while making the trailer exchange. Prior to reinstalling the fittings, wipe off the new trailer fittings using the isopropyl alcohol saturated cleanings pads. Then remove the hose connection from plastic bag, wipe down both the exterior and interior of the fitting with a fresh clean cotton wipe and reconnect.

4.0 TROUBLESHOOTING

The following tables list malfunctions, probable causes, and in most cases, possible corrective action to take for the problem at hand. By no means is this list complete. It is intended only as a guide for the maintenance personnel to help them in properly identifying and isolating equipment malfunctions. If in doubt as to the actual cause of a malfunction, consult the factory or nearest equipment representative for assistance.

MALFUNCTION	PROBLEM CAUSE	CORRECTION ACTION
High pressure drop across adsorber	Bed not flooded Bed air bound	Check to see that the air release valve is operating. Make sure there is a constant flow before valve closes.
	Feed pump pressure too high	Throttle feed pump
	Improper valving	Check valve sequence. Check for obstructions in transfer lines.
	Particulate build-up on carbon bed	Backwash per Section 3.6
Leaking flange	Loose bolts	Tighten bolts
Discharge Water From the Backwash/Vent Outlet Line	Broken Rupture Disk	Replace Rupture Disk

MALFUNCTION	PROBLEM CAUSE	CORRECTION ACTION
Leaking Pressure Relief Valve	Leaking or broken Relief Valve	Check to see is resin has collected on the valve seat. Replace Relief Valve
Resin in the effluent	Internal mechanical failure	To confirm, open effluent sample valve. Collect 1 qt. Effluent sample to check for resin. If the test confirms internal failure, call **USFILTER** at 800-435-3223
Premature breakthrough	Change of influent concentrations	Confirm by checking influent and effluent samples before changing resin
	Siphoning air in	Check Air Release/Vacuum Relief Valve for correct operation
	Background Perchlorate Colloids	Change resin
Sudden high contamination level in effluent	Check heel due to improper resin change-out	Call **USFILTER** service department
Frozen lines, broken gauges and valves	Cold weather	Insulate piping and or heat trace process. Call **USFILTER** at 800-435-3223
System bacteria infections	Disinfect System	See Appendix A – Disinfection Procedures

5.0 SYSTEM MONITORING

It is responsibility of the user to monitor the Ion Exchange System during operation. Spent resin must be properly profiled according to all applicable regulations prior to destruction.

The following is a suggested format for an operating log. This list is meant as a suggestion only and is by no means complete. Record each day the following items for each individual IX System Vessel:

1. Record all equipment maintenance, calibrations, system cleaning, repairing and any parts replacement.

2. Record any unusual occurrences, shutdowns, breakdowns, etc.

3. Record the date and time when each item is logged.

4. Record the pressure drop across the system daily to indicate if any foreign objects have entered the Ion Exchange System.

6.0 GENERAL ION EXCHANGE (IX) SYSTEM INFORMATION

6.1 TEMPORARY SHUTDOWNS:

For shutdown or intermittent operation, the IX System should remain completely full of water and the inlet and outlet should be sealed either by a valve or a cap. Prior to restarting the unit, the IX System should be rinsed using two to three bed volumes of water. Failure to rinse may result in a temporary presence of contaminated water at the outlet of the adsorber.

6.2 EXTENDED SHUTDOWNS:

If the IX System is shutdown for an extended period of time, the following procedure should be followed to reduce potential degradation of bed life.

Drain the IX System of all water. There should be no free standing water left in the vessel. All valves, manways, and vents shall be tightly sealed for the duration of the shutdown to eliminate any supply of oxygen that would promote biological growth. Prior to re-commissioning the units, follow the start-up instructions included.

6.3 EMERGENCY PROCEDURES

In the event something should occur to cause a shutdown of an adsorber, the operation shall be switched over to the other adsorber and steps shall be taken immediately to remedy the situation.

If a major leak or failure occurs which would cause the IX System to be inoperative, then the feed to the system should be shut down immediately. If repairs are beyond the scope of the plant operators, the customer service department at USFilter should be contacted immediately.

6.4 USFILTER CONTACTS - HOW TO OBTAIN HELP AND INFORMATION

USFILTER (800) 435-3223

Normal contact concerning the day-to-day operation of the system should be with the Customer Service Department. The telephone number is 800-435-3223.

7.0 MAINTENANCE

7.1 MINOR MAINTENANCE

Minor maintenance is that maintenance to be performed by the plant to ensure continuous and effective operation. This maintenance includes visual check of pressure gauges and adjustments to valves and regulators, tightening flanges and connections to eliminate leakage, backwashing, etc.

7.2 MAJOR MAINTENANCE

Major maintenance is that effort needed to repair or replace equipment in order to continue system operation. The need for major maintenance would result from a major malfunction causing the system to be inoperative. Major maintenance also refers to system design changes and/or maintenance requiring downtime. USFilter can be contacted when any major maintenance is called for.

Appendix O
CDPH Permit and Operational Requirements for the Las Flores Treatment System

Department of Health Services
Drinking Water Field Operations Branch

WATER PERMIT NO. 04-16-03PA-001

LAS FLORES WATER COMPANY

Los Angeles County

System No. 1910061

February 2003

STATE OF CALIFORNIA

AMENDMENT TO THE

DOMESTIC WATER SUPPLY PERMIT ISSUED TO

Las Flores Water Company

Public Water System – 1910061

ORIGINAL PERMIT: ***by Department of Public Health*** DATE OF ISSUE: ***12/18/52***

PERMIT AMENDMENT: ***04-16-03PA-000*** EFFECTIVE DATE: ***02/25/03***

WHEREAS:

I. The ***Las Flores Water Company*** (hereinafter, ***Company***) submitted an application to the California Department of Health Services dated ***November 20, 2002*** for an amendment to the Domestic Water Supply Permit issued to ***the District*** on ***December 18, 1952***.

II. The purpose of the amendment, as stated in the application, is to allow the ***Company*** to make the following modification to the public water system:

To construct and operate a Granular Activated Carbon Treatment System for the purpose of removing volatile organic compounds from the Mountain View Well 2.

III. The ***Company*** has submitted all of the supporting information required to evaluate the application.

IV. The California Department of Health Services has evaluated the application and the supporting material and has determined that the proposed modifications comply with all applicable State drinking water requirements.

THEREFORE:

I. The California Department of Health Services hereby approves the application submitted by the ***Company*** for a permit amendment. The Domestic Water Supply Permit issued to ***Company*** on ***December 18, 1952*** and its amendments on ***April 17, 1958, and July 9, 1998*** is hereby amended as follows:

- ***To provide Volatile Organic Chemicals Treatment at Mountain View Well 2 by using Granular Activated Carbon System.***

II. This permit amendment is subject to the following conditions:

GENERAL

1. The Company shall comply with all state laws applicable to public water systems and any regulations, standards, or orders adopted thereunder.

2. All water supplied by the Company or domestic purposes shall meet all Maximum Contaminant Levels (MCLs) established by the State Department of Health Services. If the water quality does not comply with the California Drinking Water Standards, treatment shall be provided to meet standards.

3. The only approved sources of domestic water supply are listed in Tables 1.

Table 1. Approved Sources

Source	FRDS ID	Status	Capacity
Groundwater Sources			
Mountain View Well 2	1910061-002	Active	750
Interconnections			
Foothill MWD connection	1910061-005	Active	1,400

4. The only approved treatment facilities are listed in Table 2.

Table 2. Treatment

Sacramento Blending Facilities	VOC/Nitrate/Perchlorate Blending and Chlorination	1910061-006	T2
Mountain View Well 2 Treatment Facility	VOC Removal and Chlorination	1910061-007	T2

5. No additions, changes or modifications to the approved sources of water supply or water treatment facilities outlined in Provisions 3 and 4 shall be made without prior receipt of an amended domestic water supply permit from this Department.

6. All treatment facilities shall be operated by personnel who have been certified in accordance with the Regulations relating to Certification of Water Treatment Facility Operation, California Code of Regulations. Classification of each approved treatment plant is shown in above Table 2 and the Company's water distribution system is classified as a D2 distribution system.

7. All analyses shall be performed by a laboratory certified by the Environmental Laboratory Accreditation Program (ELAP) of the State Department of Health Services for the specific analytical procedure and analytical results shall be submitted through electronic data transfer (EDT) using the PS Codes listed on Table 3.

FACILITY OPERATIONS

8. The Granular Activated Carbon vessel shall be operated not to exceed the maximum design capacity of 750 gpm.

9. The GAC facility shall be inspected daily when in use and operational records of it operations shall be maintained. Daily operational records including, as a minimum, flow rates, total volume treated, chlorine residual measurements, monthly bacteriological samples testing, operational changes and unusual occurrences shall be maintained. The records shall also document any emergency and scheduled interruptions, including:

    a. Location of the interruption,
    b. Cause of the interruption,
    c. Date, approximate time, and duration of the interruption,
    d. Precautions taken to minimize contamination of the supply and notification of the affected users, and

e. Solution/Resolution of the interruption.

10. All equipment at the Mountain View Treatment Facility shall be maintained according to the manufacturer's specifications.

11. The Mountain View Treatment Facility for Well 2 shall be operated in accordance with the approved Operations Maintenance and Monitoring Plan (Plan). The Plan shall describe the operational and emergency procedures, monitoring program and reporting requirements. The Company may modify the plans at any time to accommodate changing conditions; however, any modified plans must be submitted to and be approved by the Department prior to implementation. At any time, the Department can require the Company to modify the plans due to changing conditions, change of laws or regulations, or concerns of the public.

12. The draft Operations, Maintenance, and Monitoring Plan shall be finalized and submitted to the Department for review and approval within 45 days after receiving this amended permit.

13. Operators (shift operators) and supervisor personnel (chief operator) who make operational decisions on the treatment facilities as identified in Provision 4 and the rest of the system shall have a copy of and shall be familiar with the conditions of the water supply permit provisions and the provisions of this permit amendment. A copy of provisions shall be maintained at Las Flores Water Company's main control center.

14. Las Flores shall implement PCE Blending Plan whenever the GAC system is not operating.

MONITORING AND REPORTING

15. Well 2 shall be sampled, as a minimum, in accordance with the attached Vulnerability Assessment and Monitoring Frequency Guidelines (Appendix D of Engineering Report) or its replacement prepared by this Department.

16. Monthly sampling results for Well 2 shall be submitted to this Department by the 10th day of the following month. Table 3 summarizes the overall sampling frequency for the Well 2 treatment facility.

Table 3: Overall Sampling Schedule with Primary Station Code

Source	Primary Station Code	Constituent	Frequency
Mountain View Well 2 Wellhead (GAC influent)	1910061-003	Nitrate Perchlorate PCE HPC VOCs	Weekly Weekly Weekly Monthly Annually
GAC Sample Port at 50%	1910061-007	PCE Perchlorate	Weekly (until detected)
GAC Sample Port at 75%	1910061-008	PCE Perchlorate	Weekly (if detected at 50% Port)
GAC Effluent	1910061-009	PCE Nitrate Perchlorate HPC	Weekly Weekly Weekly Monthly
Sacramento Blending Facility	1910061-006	PCE Nitrate Perchlorate	Weekly (if GAC is bypassed) Weekly Weekly

17. All treated water from the GAC filter shall be continuously and reliably chlorinated to a residual of at least 0.2 mg/L. The chlorine residual shall be measured daily before the treated water reaches the first customer in the system.

18. Monthly bacteriological (total coliform and Heterotropic Plate Count bacteria) samples shall also be collected and analyzed for the treated water from the GAC filters prior to disinfection, and the results shall be maintained in the daily operation records.

19. The activated carbon in all vessels shall be replaced when breakthrough of (VOC) is detected in any water sample at the sample tap at 75 percent of the depth of the GAC bed measured from the top of any contractor.

20. If any GAC in the vessels is replaced with reactivated GAC, the GAC must be reactivated according to the Department Policy Number 94-005, "Use of Re-activated Carbon for Drinking Water Treatment." The Department approval is required prior to the use of any GAC other than AQUACARB 830.

21. A monthly report of the operation of the Mountain View Treatment Facility shall be submitted to the Department by the 10th day of the following month unless otherwise specified. As a minimum, the report shall include:

a. A report indicating the status of GAC vessel in terms of the daily flow rate, number of days in service, monitoring port status, differential pressure across the vessels, date of backwash, and bacterial analysis of the system effluent prior to chlorination;

b. Operational schedule and problems, both scheduled interruptions and any unscheduled interruption;

c. The report shall also include a summary of all required analytical results of the wells.

This amendment shall be appended to and shall be considered to be an integral part of the Domestic Water Supply Permit issued to ***Las Flores Water Company*** on ***December 18, 1952,*** and its amendments on ***April 17, 1958 and July 9, 1998.***

FOR THE CALIFORNIA DEPARTMENT OF HEALTH SERVICES

February 25, 2003
Date

Heather L. Collins
Heather L. Collins, P.E., District Engineer
Central District