# APPENDIX O
## Design Drawings

# PASADENA WATER AND POWER

## W.O.02557

# MONK HILL TREATMENT SYSTEM

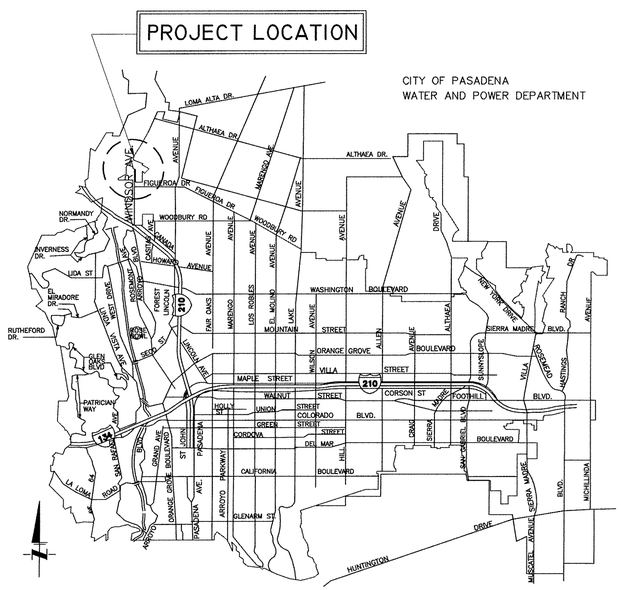


## VICINITY MAP

NOT TO SCALE

## GENERAL NOTES:

1---ALL WORK AND MATERIALS SHALL COMPLY WITH THE 2003 EDITION OF "STANDARD SPECIFICATIONS FOR PUBLIC WORKS CONSTRUCTION" (GREEN BOOK) AND SUPPLEMENTS, AND "SUPPLEMENTS AND MODIFICATIONS TO THE "GREEN BOOK" STANDARD SPECIFICATIONS FOR PUBLIC WORKS CONSTRUCTION" (PASADENA SUPPLEMENTS), UNLESS NOTED OTHERWISE.

2---NO STOCKPILING OF MATERIAL AND CONSTRUCTION EQUIPMENT IN OR ON PUBLIC STREETS OR SIDEWALKS WILL BE PERMITTED ON THIS PROJECT. MATERIAL AND EQUIPMENT PLACED IN OR ON PUBLIC STREETS, SIDEWALKS AND IN THE CONSTRUCTION AREAS SHALL BE USED THE SAME DAY.

3---THE WORK HOURS MUST COMPLY WITH PASADENA MUNICIPAL CODE CHAPTER 9.36. WORK IS NOT PERMITTED ON SATURDAY AND SUNDAY. THE CITY'S PUBLIC WORKS DEPT. AND/OR TRANSPORTATION MAY PLACE RESTRICTIONS ON WORK HOURS.

4---NOTIFY "UNDERGROUND SERVICE ALERT(USA)" OF SOUTHERN CALIFORNIA (1-800-422-4133) TWO FULL WORKING DAYS (48 HOURS MINIMUM) PRIOR TO BEGINNING ANY CONSTRUCTION ACTIVITIES, INCLUDING PAVEMENT REMOVAL, EXCAVATION AND AC OVERLAY WHICH COULD AFFECT ANY UNDERGROUND UTILITY.

5---NOTIFY ALL AFFECTED UTILITY COMPANIES AT LEAST TWO FULL WORKING DAYS (48) HOURS MINIMUM PRIOR TO BEGINNING ANY CONSTRUCTION IN THE VICINITY OF THEIR FACILITIES.

6---NOTIFY ALL BUSINESSES AND RESIDENTS TWO WEEKS PRIOR TO START OF CONSTRUCTION.

7---ALL TRAFFIC CONTROL MUST COMPLY WITH THE "MANUAL OF UNIFORM TRAFFIC CONTROL DEVICES" (MUTCD 2003) PARTS 5 AND 6 AND THE "WORK AREA TRAFFIC CONTROL HANDBOOK", (WATCH HANDBOOK 10TH EDITION), AND THE CITY'S TRANSPORTATION DEPARTMENT.

8---DEFLECT MAIN AS REQUIRED TO MAINTAIN PIPE ALIGNMENT AS SHOWN.

9---MAINTAIN A MINIMUM OF 42" OF COVER OVER MAIN, UNLESS OTHERWISE SHOWN ON THE PLANS.

10--ESTABLISH DEPTH OF COVER TO TOP OF EXISTING UTILITIES AS REQUIRED.

11--PREPARE AND SUBMIT CONSTRUCTION AS BUILTS.

12--RESTORE A.C. PAVEMENT PER STANDARD DRAWING S-416 AND ANY CONCRETE PAVEMENT PER STANDARD DRAWING S-417.

13--REMOVE AND RECONSTRUCT PAVEMENT TO NEAREST LONGITUDINAL JOINT OR CRACK WITHIN 3-FEET OF EDGE OF TRENCH.

14--ALL JOINTS ON ALL FITTINGS TO BE RESTRAINED WITH MEGALUG GLANDS.

15--RECUT LOOP DETECTORS WHERE APPLICABLE AS NECESSARY. RESPONSIBILITY FOR REPLACEMENT AND COST IS PART OF THIS PROJECT.

16--STORM DRAIN-MAINTAIN 36" OF COVER OVER MAIN AS NECESSARY TO CLEAR STORM DRAIN BY 18" MINIMUM. OTHERWISE CONCRETE BLANKET OVER STORM DRAIN IS REQUIRED PER APWA STANDARD PLAN 225-1, UNLESS NOTED OTHERWISE.

17--TEMPORARILY PAVE STREET AND OPEN TO TRAFFIC AFTER INSTALLATION OF PIPE.

18--FINAL PAVEMENT RESTORATION SHALL BE COMPLETED WITHIN TWO WEEKS OF THE COMPLETION OF EACH PROJECT PHASE. UNLESS OTHERWISE APPROVED IN WRITING BY THE CITY ENGINEER.

19--ALL PAVEMENT MARKINGS, RAISED PAVEMENT AND TRAFFIC HUMPS TO BE REPLACED IN KIND.

~~20--DUCTILE IRON PIPE TO BE CLASS 52.~~

21--THE CONSTRUCTION OF THE MONK HILL TREATMENT DISINFECTION FACILITY WILL BE PERFORMED SIMULTANEOUSLY WITH THE CONSTRUCTION OF THE MONK HILL TREATMENT SYSTEM. THE CONTRACTOR FOR THE DISINFECTION SYSTEM IS TO COORDINATE ITS WORK EFFORTS WITH OTHER WORK ACTIVITIES BEING PERFORMED ON THE MONK HILL TREATMENT SYSTEM. THE CONTRACTOR IS SOLELY RESPONSIBLE FOR COORDINATION OF ANY AND ALL OF ITS WORK ACTIVITIES DURING CONSTRUCTION. 1

22--THE CONTRACTOR IS REQUIRED TO PROTECT TREE IN PLACE PER CONDITIONS OF CONDITIONAL USE PERMIT #5057. THE PROJECT IS PROPOSING TO REMOVE TWO TREES, A QUERCUSILEX (HOLLY OAK) AND AN EUCALYPTUS SIDEROXYLON (RED BARK) ON THE CENTRAL PORTION OF THE PROJECT SITE TO ACCOMMODATE THE PROPOSED ACCESS ROAD WITH THE OWNER. THE REVIEW OF THESE TREES SHALL BE PERFORMED BY THE URBAN FORESTRY ADVISORY COMMITTEE.

23--THE CONTRACTOR IS REQUIRED TO PERFORM THE WORK IN ACCORDANCE WITH CONDITIONAL USE PERMIT #5057, THE REQUIREMENTS OF THE CONSOLIDATED DESIGN REVIEW DATED AUGUST 21, 2008 AND THE INITIAL STUDY ADOPTED BY THE CITY ON JULY 10, 2008, AND ANY CONDITIONS MANDATED BY THE BUILDING PERMIT.

~~24--ALL EARTHWORK SHALL BE DONE IN ACCORDANCE WITH SPECIFICATION 02900 AN THE ATTACHED SOIL REPORT~~

25--THE CONTRACTOR SHALL SECURE ALL LICENSES NECESSARY FOR THE EXECUTION AND COMPLETION OF THE WORK. THE CONTRACTOR SHALL PAY ALL SALES, CONSUMER, USE, AND OTHER TAXES AS REQUIRED BY LAW AND PROPERLY ASSESSED AGAINST HIS/HER EQUIPMENT OR PROPERTY USED IN CONNECTION WITH THE WORK.

26--STORAGE OF MATERIALS OR EQUIPMENT WITHIN PUBLIC RIGHT OF WAY WILL REQUIRE A PERMIT FROM THE CITY OF PASADENA DEPARTMENT OF PUBLIC WORKS.

## STORM WATER POLLUTION PREVENTION NOTES 1

1. THE CONTRACTOR IS RESPONSIBLE TO INSTALL, MAINTAIN, AND INSPECT ALL NECESSARY STORM WATER POLLUTION PREVENTION DEVICES.
2. A STANDBY CREW FOR EMERGENCY WORK SHALL BE AVAILABLE AT ALL TIMES DURING THE RAINY SEASON ( OCT. 1 TO APRIL 30 ). NECESSARY MATERIALS SHALL BE AVAILABLE ONSITE AND STOCKPILED AT CONVENIENT LOCATIONS TO FACILITATE RAPID CONSTRUCTION OF EMERGENCY DEVICES WHEN RAIN IS IMMINENT.
3. EROSION CONTROL DEVICES SHOW ON THIS PLAN MAY BE REMOVED WHEN APPROVED BY THE GRADING INSPECTOR IF THE GRADING OPERATION HAS PROGRESSED TO THE POINT WHERE THEY ARE NO LONGER REQUIRED.
4. ERODED SEDIMENTS AND OTHER POLLUTANTS MUST BE RETAINED ON SITE AND MAY NOT BE TRANSPORTED FROM THE SITE VIA SHEET FLOW, SWALES, AREA DRAINS, NATURAL DRAINAGE COURSES OR WIND
5. STOCK PILES OF EARTH AND OTHER CONSTRUCTION MATERIALS MUST BE PROTECTED FROM BEING TRANSPORTED FROM THE SITE BY THE FORCES OF WIND AND WATER FLOW.
6. OILS, SOLVENTS, AND OTHER TOXIC MATERIALS MUST BE STORED IN ACCORDANCE WITH THEIR LISTING SO AS TO NOT CONTAMINATE THE SOIL AND SURFACE WATERS. ALL APPROVED STORAGE CONTAINERS ARE TO BE PROTECTED FROM THE WEATHER. SPILLS MUST BE CLEANED UP IMMEDIATELY AND DISPOSED OF IN A PROPER MANNER. SPILLS MAY NOT BE WASHED INTO THE DRAINAGE SYSTEM, NOR BE ALLOWED TO SETTLE OR INFILTRATE INTO SOIL.
7. EXCESS OR WASTE CONCRETE MAY NOT BE WASHED INTO THE PUBLIC DRAIN OR ANY OTHER DRAINAGE SYSTEM. PROVISIONS SHALL BE MADE TO RETAIN CONCRETE WASTES ON SITE UNTIL THEY CAN BE DISPOSE OF CONCRETE SOLID WASTE AS SOON AS PRACTICAL.
8. TRASH AND CONSTRUCTION SOLID WASTES MUST BE DEPOSITED INTO A COVERED RECEPTACLE TO PREVENT CONTAMINATION OF RAINWATER AND DISPERSAL BY WIND.
9. SEDIMENTS AND OTHER MATERIALS SHALL NOT BE TRACKED FROM THE SITE BY VEHICLE TRAFFIC. THE CONSTRUCTION ENTRANCE ROADWAYS MUST BE STABILIZED SO AS TO INHIBIT SEDIMENTS FROM BEING DEPOSITED ONTO THE PUBLIC RIGHT OF WAY. ACCIDENTAL DEPOSITIONS MUST BE SWEPT UP IMMEDIATELY AND SHALL NOT BE WASHED DOWN BY RAIN OR OTHER MEANS.
10. ANY SLOPE WITH DISTURBED SOILS OR REMOVED VEGETATION MUST BE STABILIZED TO PROHIBIT EROSION BY WIND AND WATER.
11. EROSION CONTROL DEVICES WILL BE MODIFIED AS NEEDED AS THE PROJECT PROGRESSES, AT THE DIRECTION OF THE ENGINEER.
12. CONTRACTOR SHALL MAINTAIN DUST CONTROL AND DIRT TRACKING PREVENTION AT ALL TIMES BY SWEEPING PAVED AREAS. DUST FROM EXPOSED UNPAVED AREAS SHALL BE CONTROLLED BY WATERING. THE CONTRACTOR SHALL UTILIZE A BIO DEGRADABLE SOIL STABILIZER ADDITIVE TO DUST CONTROL WATER.

## UNDERGROUND UTILITIES & STRUCTURES NOTES

A. CONTRACTOR SHALL NOTIFY UNDERGROUND SERVICE ALERT (USA) TELEPHONE 1-800-422-4133, AND UTILITY REPRESENTATIVES A MINIMUM OF 48 HOURS PRIOR TO COMMENCING ANY WORK, AND REQUEST UTILITIES TO FIELD MARK ALL KNOWN FACILITIES.

B. LOCATION OF UTILITY LINES AND SUBSTRUCTURES SHOWN ON THE PLANS ARE APPROXIMATE. QUANTITY AND LOCATION OF UNDERGROUND SERVICES IS BASED ON A DILIGENT SEARCH OF AVAILABLE RECORDS. CONTRACTOR SHALL VERIFY ALL LOCATIONS AND DEPTHS OF UTILITIES BY POT HOLING PRIOR TO THE START OF ANY WORK. IF ELEVATION OF EXISTING PIPELINES OR STRUCTURES WILL CAUSE CONFLICT WITH PROPOSED PIPELINES OR STRUCTURES WILL CAUSE CONFLICT WITH PROPOSED PIPELINE, CONTRACTOR SHALL NOTIFY THE ENGINEER FOR POSSIBLE REVISIONS TO PLANS.

C. CONTRACTOR SHALL EXERCISE EXTREME CARE DURING EXCAVATION, TO PROTECT EXISTING UTILITY LINES, IRRIGATION LINES AND CONTROL WIRES, AND SERVICE CONNECTIONS TO EXISTING BUILDINGS.

D. UNDERGROUND UTILITY LINES AND IRRIGATION SYSTEMS DAMAGED BY THE CONTRACTOR SHALL BE REPAIRED WITHIN 24 HOURS OF THE DAMAGE AT THE CONTRACTORS EXPENSE.

E. NOT ALL EXISTING IRRIGATION SYSTEMS AND INDIVIDUAL SERVICES ARE SHOWN, THE CONTRACTOR IS RESPONSIBLE FOR LOCATING THESE IN THE FIELD.

## UTILITY CONTACT

| | |
|---|---|
| UNDERGROUND SERVICE ALERT | (800) 422-4133 |
| SOUTHERN CALIFORNIA EDISON CO.<br>JOHN WILLIAMS | (562) 981-8218 |
| SOUTHERN CALIFORNIA GAS CO.<br>RICHARD GIBSON | (714) 634-3159 |
| VERIZON<br>PETE MORALES | (714) 375-6719 |
| VERIZON<br>RAY ROUNDTREE | (562) 903-7915 |
| CHARTER COMMUNICATIONS<br>EVA HERRERA | (626) 430-3324 |
| PASADENA WATER & POWER<br>ROUMIANA VOUTCHKOVA | (626) 744-4005 |
| CSDLAC<br>VINCENT SMITH | (562) 699-7411 EXT. 1205 |

## STEEL METAL BUILDING INFORMATION

OCCUPANCY= GROUP U
CONSTRUCTION TYPE= STEEL METAL
SPRINKLER= UNSPRINKLERED
OCCUPANT LOAD= 20 PSF + 240 PSF TRUCK LOAD.
FLOOR AREA= 532 SQ. FT. 1

CODES= 2007 CBC
ROOF LL= 20 PSF
WIND= 20 PSF
$S_S$= 2.574
$S_{DS}$= 1.716

(1-800-422-4133) UNDERGROUND SERVICE ALERT
DIG ALERT
PLAY IT SAFE. DIAL BEFORE YOU DIG!
AT LEAST TWO WORKING DAYS PRIOR TO EXCAVATING

## NOTICE TO CONTRACTORS

CONTRACTOR AGREES THAT HE SHALL ASSUME SOLE AND COMPLETE RESPONSIBILITY FOR JOB SITE CONDITIONS DURING THE COURSE OF CONSTRUCTION OF THIS PROJECT, INCLUDING SAFETY OF ALL PERSONS AND PROPERTY; THAT THIS REQUIREMENT SHALL APPLY CONTINUOUSLY AND NOT BE LIMITED TO NORMAL WORKING HOURS; THAT THE CONTRACTOR SHALL DEFEND, INDEMNIFY AND HOLD THE OWNER AND THE ENGINEER HARMLESS FROM ANY AND ALL LIABILITY, REAL OR ALLEGED, IN CONNECTION WITH THE PERFORMANCE OF WORK ON THIS PROJECT.

G-101

| REVISION | | |
|---|---|---|
| NO. | DESCRIPTION | DATE |
| 1 | BUILDING DEPARTMENT PLAN CHECK COMMENTS. | 01/05/09 |

REGISTERED PROFESSIONAL ENGINEER CHRISTOPHER SHEM HAWES 69578 6/30/2010 CIVIL STATE OF CALIFORNIA

APPROVED BY: CHRISTOPHER SHEM HAWES 69578 RCE — 2/25/08 DATE
APPROVED: — DATE
APPROVED: — DATE

PLANS PREPARED BY:
CIVILTEC engineering inc.
*General Civil, Municipal, Water and Wastewater Engineering, Planning, Construction Management and Surveying*
118 West Lime Avenue
Monrovia, Ca. 91016
Phone: (626) 357-0588
Fax: (626) 303-7957

Battelle
*The Business of Innovation*

CITY OF PASADENA INCORPORATED JUNE 1886

D.S.-209 & 210A

| | | | |
|---|---|---|---|
| DATE: FEBRUARY 2009 | SCALE: AS SHOWN | PASADENA WATER & POWER<br>CITY OF PASADENA | SHEET NO 1 OF 79 SHEETS |
| DRAWN BY CIVILTEC<br>DESIGNED BY CIVILTEC<br>CHECKED BY CIVILTEC<br>SUBMITTED BY CIVILTEC | | MONK HILL TREATMENT SYSTEM<br>TITLE PAGE | WORK ORDER 02557 / FILE NUMBER E-1670 |
| FIELD BOOKS / CALC BOOKS | | APPROVED / APPROVED | REVISION |

X:\2007\27140-JPL MONKHILL TREATMENT PLANT\DWG\SUBMITTALS\FINAL SUBMITTAL\27140-G-101.DWG (03-07-09 8:40:53AM)

# SYMBOLS

- A/V — AIR AND VACUUM VALVE
- B.O. — BLOW-OFF
- WM — WATER SERVICE METER
- REDUCER/ENLARGER
- END CAP
- TEE
- STREET LIGHT
- PULL BOX
- EXISTING FIRE HYDRANT
- OR — EXISTING VALVES
- SMH — EXISTING SEWER MANHOLE
- SMH — PROPOSED SEWER MANHOLE
- OR — THRUST BLOCK
- 3309 — ADDRESS – PROPERTY ADDRESS
- (1) (2) (3) — APN – ASSESSOR'S PARCEL NUMBER
- PRV — PRESSURE REGULATING VALVE
- EXISTING CONCRETE
- CONCRETE PAVING HEAVY DUTY (REF. SPECS. AND PAVEMENT LEGEND)
- CONCRETE PAVING LIGHT DUTY (REF. SPECS. AND PAVEMENT LEGEND)
- LANDSCAPE AREA (REF. SPECS. AND PAVEMENT LEGEND)
- PROPOSED FENCE
- EXISTING CHAIN LINK FENCE
- PROPOSED A.C. PAVEMENT
- RIGHT-OF-WAY
- CITY BOUNDARY
- DAYLIGHT
- W — EXISTING WATER MAIN
- S — EXISTING SEWER MAIN
- G — EXISTING GAS MAIN
- E — EXISTING ELECTRICAL LINE
- CATV — EXISTING CABLE TV LINE
- T — EXISTING TELEPHONE LINE
- PROPERTY LINE
- (SD) — EXISTING STORM DRAIN
- (O) — EXISTING OIL PIPELINE
- PAINTED DIRECTIONAL ARROW
- PAINTED ACCESSIBILITY SYMBOL
- MASONRY FENCE
- EXISTING RETAINING WALL
- PROPOSED RETAINING WALL
- (930.00 FS) — EXISTING ELEVATION
- 930.00 FS — PROPOSED ELEVATION
- LIMITS OF GRADING AND PERMIT
- 250 — EXISTING CONTOUR
- 250 — PROPOSED CONTOUR
- (102.78) — EXISTING GRADE
- EDGE OF A. C. PAVEMENT

- CONCENTRATED FLOW LINE
- SHEET FLOW DRAINAGE
- G — PROPOSED GAS MAIN
- W — PROPOSED WATER MAIN
- S — PROPOSED SANITARY SEWER
- E — PROPOSED UNDERGROUND ELECTRICAL CONDUIT
- T — PROPOSED UNDERGROUND TELEPHONE CONDUIT
- CTV — PROPOSED UNDERGROUND CABLE TELEVISION CONDUIT
- SD — PROPOSED STORM DRAIN
- O — PROPOSED OIL PIPELINE
- PROPOSED CONDUIT
- STREET CENTERLINE (℄)
- SLOPE — DRAINAGE FLOW
- PROPOSED WATER LINES
- PROPOSED WATER LINES (UNDERGROUND)
- PROPOSED FLANGED GATE VALVE
- PROPOSED FLANGED PLUG VALVE
- PROPOSED FLANGED CHECK VALVE
- PROPOSED FLANGED BUTTERFLY VALVE
- TYPICAL STEEL-RING FLANGE
- EXISTING GATE VALVE

△0 = PROPOSED WATER LINE CROSSES OVER EXISTING UTILITY. 1.0' MIN. SEPARATION, UNLESS OTHERWISE STATED ON THE PLANS.

△U = PROPOSED WATER LINE CROSSES UNDER EXISTING UTILITY. 1.0' MIN. SEPARATION, UNLESS OTHERWISE STATED ON THE PLANS.

SECTION A/3 — SCALE
- SECTION LETTER
- DRAWING NUMBER FROM WHICH THE SECTION WAS TAKEN.

DETAIL 2/3 — SCALE
- DETAIL NUMBER
- DRAWING NUMBER FROM WHICH THE DETAIL WAS TAKEN.

SEE DETAIL 2/3
- DETAIL NUMBER
- DRAWING NUMBER FROM WHICH THE DETAIL APPEARS.

A/5
- SECTION LETTER
- DRAWING NUMBER WHICH THE SECTION APPEARS

PROFILE 2/3 — SCALE
- PROFILE NUMBER
- DRAWING NUMBER FROM WHICH THE PROFILE WAS TAKEN.

SEE PROFILE 2/3
- PROFILE NUMBER
- DRAWING NUMBER FROM WHICH THE PROFILE APPEARS.

- BOLLARD
- EX. BUILDING
- EX. TREES
- NEW CURB
- NEW GUTTER
- NEW BUILDING
- NEW VESSELS
- FIRE HYDRANT
- CUT AND PLUG

# ABBREVIATIONS

| | |
|---|---|
| ALT. | ALTERNATE |
| & OR ⅊ | AND |
| ∠ | ANGLE |
| ∠ | ANGLE (STRUCTURAL) |
| ∠s | ANGLES |
| APPD. EQ. | APPROVED EQUAL |
| APPROX. | APPROXIMATE |
| A.C.P. | ASBESTOS-CEMENT PIPE |
| A.C. | ASPHALT CONCRETE |
| ASSY. | ASSEMBLY |
| ART. | ARTICLE |
| @ | AT |
| AVE. | AVENUE |
| B.C. | BEGINNING OF CURVE |
| B.&S. | BELL AND SPIGOT |
| B.M. | BENCH MARK |
| B.C. | BOLT CIRCLE |
| BOT. | BOTTOM |
| BLVD. | BOULEVARD |
| BDRY. | BOUNDARY |
| BLDG. | BUILDING |
| B'FLY. | BUTTERFLY |
| B.V. | BUTTERFLY VALVE |
| BW | BACK OF WALK |
| CB | CATCH BASIN |
| C.I. | CAST IRON |
| C.I.P. | CAST IRON PIPE |
| ℄ OR CL | CENTER LINE |
| CTR. | CENTER |
| C.L.F. | CHAIN LINK FENCE |
| CH'KD PL | CHECKERED PLATE |
| C.C. | CENTER TO CENTER |
| C.M.L. | CEMENT MORTAR LINED |
| CML & C | CEMENT MORTAR LINED & COATED |
| CML & P | CEMENT MORTAR LINED & PAINTED |
| C.M.C. | CEMENT MORTAR COATED |
| CL. | CLASS |
| COEF. | COEFFICIENT |
| COL. | COLUMN |
| CO. | COMPANY |
| CONC. | CONCRETE |
| CONST. | CONSTRUCTION |
| CONT. | CONTINUOUS |
| COORD. | COORDINATE |
| COR. | CORNER |
| CORP. | CORPORATION |
| CORR. | CORRUGATED |
| C.M.P. | CORRUGATED METAL PIPE |
| CPLG. | COUPLING |
| C.A.B. | CRUSHED AGGREGATE BASE |
| CU. | CUBIC |
| C.F. | CURB FACE |
| C.Y. | CUBIC YARD |
| CYL. | CYLINDER |
| CLRN. | CLEARANCE |
| ° OR DEG. | DEGREE |
| Δ | DELTA |
| DEPT. | DEPARTMENT |
| DET. | DETAIL |
| D, DIA., OR ø | DIAMETER |
| DWG. | DRAWING |
| DR. | DRIVE |
| D.I. | DUCTILE IRON |
| D.I.P. | DUCTILE IRON PIPE |
| EA. | EACH |
| E.F. | EACH FACE |
| E.W. | EACH WAY |
| E.W.E.F. | EACH WAY EACH FACE |
| E. | EAST |
| E/O | EAST OF |
| ECC. | ECCENTRIC |
| EP | EDGE OF PAVEMENT |
| EMH | ELECTRICAL MANHOLE |
| EL. OR ELEV. | ELEVATION |
| ELL. | ELBOW |
| E.C. | END OF CURVE |
| EQ. OR = | EQUAL |
| EXIST. OR EX. | EXISTING |
| FT. | FOOT OR FEET |
| FIG. | FIGURE |
| FIN. | FINISH |
| FF | FINISHED FLOOR |
| F.S. | FINISHED SURFACE |
| F.G. | FINISHED GRADE |
| FLG. | FLANGE |
| FLGD. | FLANGED |
| FE | FLANGED END |
| FH | FIRE HYDRANT |
| FL | FLOW LINE |
| GA. | GAGE OR GAUGE |
| GAL. | GALLON |
| GALV. | GALVANIZED |
| G.I.P. | GALV. IRON PIPE |
| G.M. | GAS METER |
| G.V. | GATE VALVE |
| G.B. | GRADE BREAK |
| GND. | GROUND |
| H.P. | HIGH POINT |
| HWY. | HIGHWAY |
| HORIZ. | HORIZONTAL |
| HP. | HORSE POWER |
| IN. OR " | INCH |
| INCL. | INCLUDING |
| I.D. | INSIDE DIAMETER |
| INST. | INSTALL |
| INC. | INCORPORATED |
| INT. | INTERIOR |
| INV. | INVERT |
| I.P.S. | IRON PIPE SIZE |

| | |
|---|---|
| LN. | LANE |
| LAT. | LATITUDE |
| LT. | LEFT |
| LG. | LENGTH |
| L.F. | LINEAR FOOT |
| LG. | LONG |
| LONG. | LONGITUDINAL |
| LL | LOT LINE |
| LP | LOW POINT |
| LUB. | LUBRICATED |
| M.H. | MANHOLE |
| MHR | MANHOLE RIM |
| MFR. | MANUFACTURER |
| MAX. | MAXIMUM |
| M.S.L. | MEAN SEA LEVEL |
| M.J. | MECHANICAL JOINTS |
| MID. | MIDDLE |
| MI. | MILE |
| MIN. | MINIMUM |
| ' OR MIN. | MINUTE |
| MISC. | MISCELLANEOUS |
| MON. | MONUMENT |
| NEG. | NEGATIVE |
| N. | NORTH |
| N/O | NORTH OF |
| N.I.C. | NOT IN CONTRACT |
| N.T.S. | NOT TO SCALE |
| NO. OR # | NUMBER |
| NOS. | NUMBERS |
| O.C. | ON CENTER |
| O.A.E. | OR APPROVED EQUAL |
| O.D. | OUTSIDE DIAMETER |
| PVMT. | PAVEMENT |
| P.E. | PAD ELEVATION |
| PLT. | PLATE |
| PE | PLAIN END |
| P.A. | PLANTER AREA |
| P.C.C. | POINT OF COMPOUND CURVE OR PORTLAND CEMENT CONCRETE |
| P.C. | POINT OF CURVE |
| P.I. | POINT OF INTERSECTION |
| P.O.S. | POINT OF SLOPE |
| P.T. | POINT OF TANGENCY |
| PT. | POINT |
| P.V.C. | POLYVINYL CHLORIDE |
| POS. | POSITIVE |
| LB. | POUND |
| P.S.I. | POUND PER SQUARE INCH |
| P.P. | POWER POLE |
| PVT. | PRIVATE |
| PROJ. | PROJECT |
| PL | PROPERTY LINE |
| R. OR RAD. | RADIUS |
| RL | RIDGELINE |
| R.R. | RAILROAD |
| R.G. | ROUGH GRADE |
| RY. | RAILWAY |
| REF. | REFERENCE |
| REINF. | REINFORCING |
| R.C.P. | REINFORCED CONC. PIPE |
| RES. | RESERVOIR |
| R.W.G.V. | RESILIENT WEDGE GATE VALVE |
| REV. | REVISION |
| RT. | RIGHT |
| R/W | RIGHT-OF-WAY |
| RD. | ROAD |
| RS4 | SINGLE FAMILY RESIDENCE |
| " OR SEC. | SECOND |
| SD | STORM DRAIN |
| SECT. | SECTION |
| SMH | SEWER MANHOLE |
| SHT. | SHEET |
| S. | SOUTH |
| S/O | SOUTH OF |
| SPEC'S. | SPECIFICATIONS |
| SQ. | SQUARE |
| SS | SANITARY SEWER |
| STD. | STANDARD |
| STA. | STATION |
| STL. | STEEL |
| S.C.C.P. | STL. CYL. CONC. PIPE |
| SDMH | STORM DRAIN MANHOLE |
| ST. | STREET |
| ST. LT. | STREET LIGHT |
| STR. | STRUCTURAL |
| S1S1E | SURFACED 1 SIDE & 1 EDGE |
| S2S1E | " 2 SIDES & 1 EDGE |
| S1S2E | " 1 SIDE & 2 EDGES |
| S1E | " 1 EDGE |
| S1S | " 1 SIDE |
| S2E | " 2 EDGES |
| S4S | " 4 SIDES |
| SYM. | SYMMETRICAL |
| TMH | TELEPHONE MANHOLE |
| T.P. | TELEPHONE POLE |
| TEMP. | TEMPERATURE |
| TERR. | TERRACE |
| THD. | THREAD |
| TOE | TOE OF SLOPE |
| TC | TOP OF CURB |
| TF | TOP OF FOOTING |
| T.G. | TOP OF GRATE |
| TOP | TOP OF SLOPE |
| T.P. | TOP OF PLATFORM |
| T.V. | TOP OF VAULT |
| TW | TOP OF WALL |
| TRANS. | TRANSITION |
| TYP. | TYPICAL |
| TJ | TYTON JOINT |
| VERT. | VERTICAL |
| V.C.P. | VITRIFIED CLAY PIPE |
| WM | WATER METER |
| WV | WATER VALVE |
| WT. | WEIGHT |
| W. | WEST |
| W/O | WEST OF |
| W/ | WITH |
| YD. | YARD |

# SHEET INDEX

| NO | DRAWING NO. | SHEET'S TITLE |
|---|---|---|
| 1 | G-101 | TITLE PAGE |
| 2 | G-102 | SHEET/INDEX/SYMBOLS/ABBREVIATIONS |
| 3 | G-103 | START UP PROCESS FLOW DIAGRAM |
| 4 | G-104 | HYDRAULIC PROFILE |
| 5 | C-101 | GENERAL SITE PLAN |
| 6 | C-102 | TREATMENT SYSTEM – SITE PLAN/YARD PIPING |
| 7 | C-103 | ARROYO – SITE PLAN/YARD PIPING |
| 8 | C-104 | VENTURA WELL – SITE PLAN/YARD PIPING |
| 9 | C-105 | YARD PIPING CONNECTIONS |
| 10 | C-106 | YARD PIPING CONNECTIONS |
| 11 | C-107 | PIPING PROFILES |
| 12 | C-108 | PIPING PROFILES |
| 13 | C-109 | 30" RCP PROFILE |
| 14 | C-110 | PRECISE GRADING PLAN |
| 15 | C-111 | PRECISE GRADING SECTIONS/DETAILS |
| 16 | C-112 | CIVIL DETAILS |
| 17 | – | NOT USED – SEE STREET IMPROVEMENT PLANS |
| 18 | – | NOT USED – SEE STREET IMPROVEMENT PLANS |
| 19 | – | NOT USED – SEE STREET IMPROVEMENT PLANS |
| 20 | – | NOT USED – SEE STREET IMPROVEMENT PLANS |
| 21 | – | NOT USED – SEE STREET IMPROVEMENT PLANS |
| 22 | – | NOT USED – SEE STREET IMPROVEMENT PLANS |
| 23 | – | NOT USED – SEE STREET IMPROVEMENT PLANS |
| 24 | TPS-101 | TREATMENT PAD PLAN |
| 25 | TPS-102 | CONCRETE PAD SECTIONS |
| 26 | TPM-101 | VESSELS PLAN |
| 27 | TPM-102 | VESSELS ELEVATIONS |
| 28 | TPM-103 | VESSELS ELEVATIONS |
| 29 | TPM-104 | BACKWASH FILTER |
| 30 | TPM-105 | STAIRS, GUARDRAIL & HANDRAIL PLAN |
| 31 | VWA-101 | VENTURA WELL ARCHITECTURAL PLAN |
| 32 | VWA-102 | VENTURA WELL ARCHITECTURAL ELEVATIONS |
| 33 | VWA-103 | VENTURA WELL ARCHITECTURAL BUILDING SECTIONS |
| 34 | VWA-104 | VENTURA WELL ARCHITECTURAL BUILDING DETAILS |
| 35 | VWA-105 | VENTURA WELL ARCHITECTURAL DETAILS |
| 36 | VWS-101 | VENTURA WELL STRUCTURAL PLAN |
| 37 | VWS-102 | VENTURA WELL STRUCTURAL DETAILS |
| 38 | VWM-101 | VENTURA WELL MECHANICAL PIPING PLAN |
| 39 | VWM-102 | VENTURA WELL STRUCTURAL SECTIONS |
| 40 | SCH-101 | VALVE SCHEDULE |
| 41 | SCH-102 | VALVE SCHEDULE |
| 42 | SCH-103 | PUMP AND MECHANICAL SCHEDULE |
| 43 | SCH-104 | INSTRUMENTATION SCHEDULE |
| 44 | DT-101 | GENERAL DETAILS |
| 45 | DT-102 | GENERAL DETAILS |
| 46 | DT-103 | GENERAL DETAILS |
| 47 | DT-104 | GENERAL DETAILS |
| 48 | DT-105 | GENERAL DETAILS |
| 49 | DT-106 | GENERAL DETAILS |
| 50 | DT-107 | GENERAL DETAILS |
| 51 | DT-108 | GENERAL DETAILS |

| NO | DRAWING NO. | SHEET'S TITLE |
|---|---|---|
| 52 | PID-101 | LEGEND/SYMBOLS/ABBREVIATIONS |
| 53 | PID-102 | BOOSTER STATION AND INFLUENT FILTERS |
| 54 | PID-103 | ION EXCHANGE TANKS |
| 55 | PID-104 | ION EXCHANGE TANKS |
| 56 | PID-105 | LGAC TANKS |
| 57 | PID-106 | LGAC TANKS |
| 58 | PID-107 | LGAC TANKS |
| 59 | PID-108 | LGAC TANKS |
| 60 | E-100 | GENERAL NOTES, SYMBOLS AND ABBREVIATIONS |
| 61 | E-101 | WINDSOR WELL-SINGLE LINE DIAGRAM, ELEVATIONS AND SCHEDULE |
| 62 | E-102 | WINDSOR WELL-SITE AND BUILDING PLAN-ELECTRICAL |
| 63 | E-103 | WINDSOR WELL-PUMP CONTROL SCHEMATIC |
| 64 | E-104 | WINDSOR WELL-PLC INPUT/OUTPUT DIAGRAM |
| 65 | E-201 | WELL 52-SINGLE LINE DIAGRAM, ELEVATIONS AND SCHEDULE |
| 66 | E-202 | WELL 52-SITE AND BUILDING PLAN-ELECTRICAL |
| 67 | E-203 | WELL 52-PUMP CONTROL SCHEMATIC |
| 68 | E-204 | WELL 52-PLC INPUT/OUTPUT DIAGRAM |
| 69 | E-301 | ARROYO WELL-SINGLE LINE DIAGRAM, ELEVATIONS AND SCHEDULE |
| 70 | E-302 | ARROYO WELL-SITE AND BUILDING PLAN-ELECTRICAL |
| 71 | E-303 | ARROYO WELL-PUMP CONTROL SCHEMATIC |
| 72 | E-304 | ARROYO WELL-BOOSTER PUMP CONTROL SCHEMATIC |
| 73 | E-305 | ARROYO WELL-PLC INPUT/OUTPUT DIAGRAM |
| 74 | E-401 | VENTURA WELL-SINGLE LINE DIAGRAM, ELEVATIONS AND SCHEDULE |
| 75 | E-402 | VENTURA WELL-BUILDING PLAN-ELECTRICAL |
| 76 | E-403 | VENTURA WELL-PUMP CONTROL SCHEMATIC |
| 77 | E-404 | VENTURA WELL-BOOSTER PUMP CONTROL SCHEMATIC |
| 78 | E-405 | VENTURA WELL-PLC INPUT/OUTPUT DIAGRAM |
| 79 | E-501 | MISCELLANEOUS ELECTRICAL DETAILS |

G-102

REVISION

| NO. | DESCRIPTION | DATE |
|---|---|---|
| 1 | BUILDING DEPARTMENT PLAN CHECK COMMENTS | 01/05/09 |

REGISTERED PROFESSIONAL ENGINEER — CHRISTOPHER SHEM HAWES — 69578 — 10/30/2010 — CIVIL — STATE OF CALIFORNIA

APPROVED BY: CHRISTOPHER SHEM HAWES 69578 RCE — 2/25/08 DATE
APPROVED: — DATE
APPROVED: — DATE

PLANS PREPARED BY:
CIVILTEC engineering inc.
*General Civil, Municipal, Water and Wastewater Engineering, Planning, Construction Management and Surveying*
118 West Lime Avenue
Monrovia, Ca. 91016
Phone: (626) 357-0588
Fax: (626) 303-7957

Battelle — The Business of Innovation

CITY OF PASADENA — INCORPORATED JUNE, 1886

D.S.-209 & 210A

| | | |
|---|---|---|
| DATE: FEBRUARY 2009 | SCALE: AS SHOWN | PASADENA WATER & POWER — CITY OF PASADENA |
| DRAWN BY: CIVILTEC | | MONK HILL TREATMENT SYSTEM — SHEET/INDEX/SYMBOLS/ABBREVIATIONS |
| DESIGNED BY: CIVILTEC | | |
| CHECKED BY: CIVILTEC | | |
| SUBMITTED BY: CIVILTEC | | |
| FIELD BOOKS | CALC BOOKS | APPROVED / APPROVED |

SHEET NO 2 OF 79 SHEETS
WORK ORDER 02557
FILE NUMBER E-1670
REVISION

V:\2007\27140-JPL MONWELL TREATMENT PLANT\DWGS\SUBMITTALS\FINAL SUBMITTAL\27140-G-102.DWG (02-27-09 10:50:29AM)

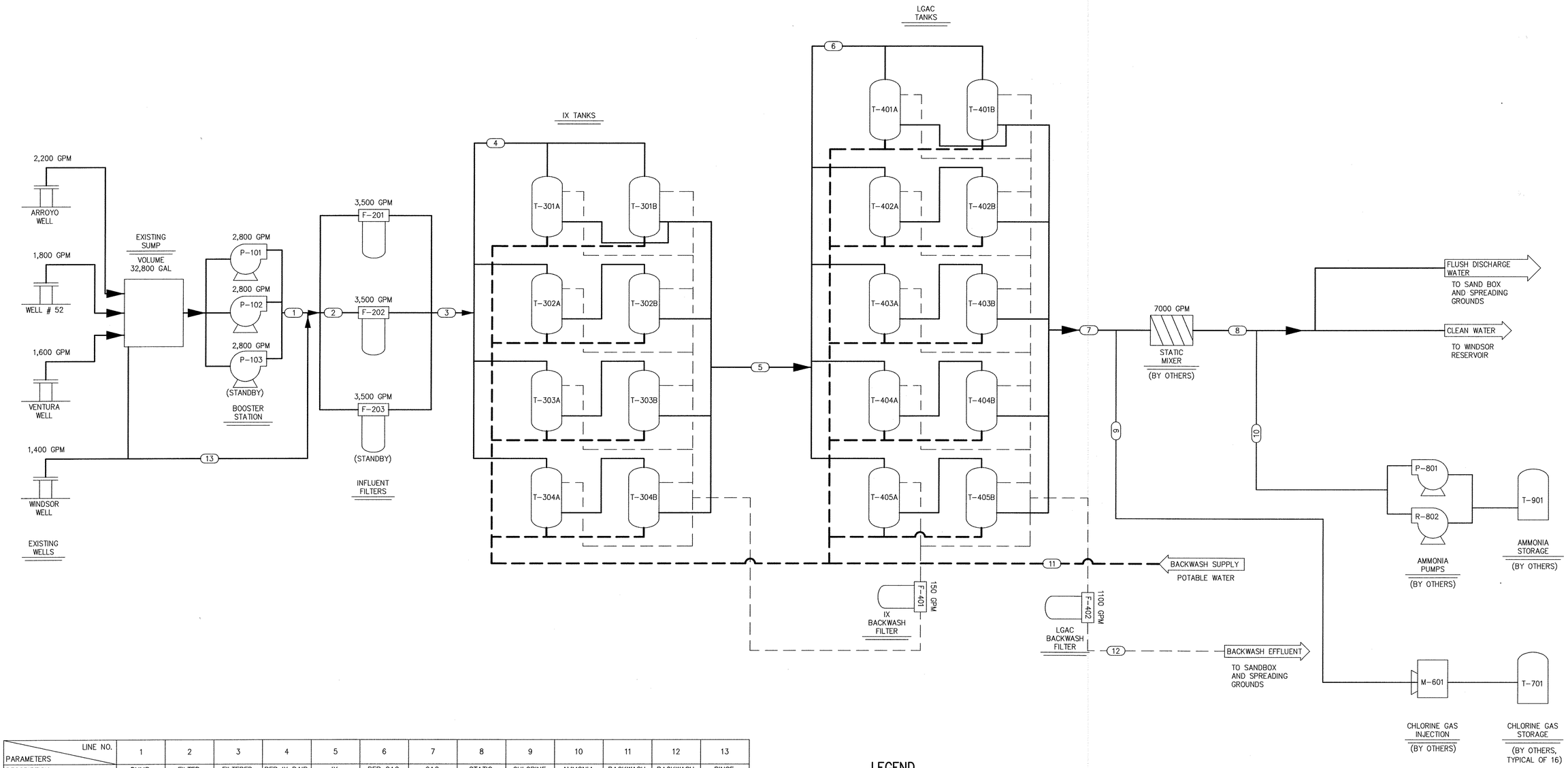


| LINE NO. / PARAMETERS | 1 | 2 | 3 | 4 | 5 | 6 | 7 | 8 | 9 | 10 | 11 | 12 | 13 |
|---|---|---|---|---|---|---|---|---|---|---|---|---|---|
| DESCRIPTION | PUMP DISCHARGE | FILTER INFLUENT PER FILTER | FILTERED INFLUENT | PER IX PAIR | IX EFFLUENT | PER GAC PAIR | GAC EFFLUENT | STATIC MIXER EFFLUENT | CHLORINE | AMMONIA | BACKWASH SUPPLY (IX/GAC) | BACKWASH DISCHARGE (IX/GAC) | RINSE |
| FLOW (GPM) | 5,600 | 3,500 | 7,000 | 1,750 | 7,000 | 1,400 | 7,000 | 7,000 | 252 (lb/day) | 50 (lb/day) | 150/1,100 | 150/1,100 | 1,400 |
| PRESSURE (PSIG) WORKING | 114 | 70 | 56 | 52 | 34 | 30 | 20 | 21 | 21* | 15* | 132/118 | 100/85 | 73 |
| ClO4 (PPB) | 45 | 45 | 45 | 45 | < 4 | < 4 | < 4 | < 4 | – | – | – | – | – |
| TCE (PPB) | 3.2 | 3.2 | 3.2 | 3.2 | 3.2 | 3.2 | < 0.5 | < 0.5 | – | – | – | – | – |
| PCE (PPB) | 0.59 | 0.59 | 0.59 | 0.59 | 0.59 | 0.59 | < 0.5 | < 0.5 | – | – | – | – | – |
| 1,2-DCA (PPB) | 0.46 | 0.46 | 0.46 | 0.46 | 0.46 | 0.46 | < 0.5 | < 0.5 | – | – | – | – | – |
| CCl4 (PPB) | 2.7 | 2.7 | 2.7 | 2.7 | 2.7 | 2.7 | < 0.5 | < 0.5 | – | – | – | – | – |
| 1,2,3-TCP (PPB) | 0.02 | 0.02 | 0.02 | 0.02 | 0.02 | 0.02 | < 0.005 | < 0.005 | – | – | – | – | – |
| NITRATE (PPM) | 24 | 24 | 24 | 24 | 24 | 24 | < 36 | < 36 | – | – | – | – | – |
| SULFATE (PPM) | 55 | 55 | 55 | 55 | 55 | 55 | < 60 | < 60 | – | – | – | – | – |
| BICARBONATE | 230 | 230 | 230 | 230 | N/A | N/A | N/A | N/A | – | – | – | – | – |
| CHLORIDE | 53 | 53 | 53 | 53 | 53 | 53 | < 60 | < 60 | – | – | – | – | – |

* DENOTES PIPELINE BACKPRESSURE AT INJECTION POINT

## LEGEND

- MAIN PROCESS PIPING
- BACKWASH SUPPLY
- BACKWASH DISCHARGE
- CHEMICAL SUPPLY

G-103

| REVISION | | |
|---|---|---|
| NO. | DESCRIPTION | DATE |
| | | |
| | | |
| | | |
| | | |

REGISTERED PROFESSIONAL ENGINEER CHRISTOPHER SHEM HAWES 69578 12/30/2010 CIVIL STATE OF CALIFORNIA

APPROVED BY: CHRISTOPHER SHEM HAWES 69578 RCE — DATE 2/25/08
APPROVED: — DATE
APPROVED: — DATE

PLANS PREPARED BY:
CIVILTEC engineering inc.
*General Civil, Municipal, Water and Wastewater Engineering, Planning, Construction Management and Surveying*
118 West Lime Avenue
Monrovia, Ca. 91016
Phone: (626) 357-0588
Fax: (626) 303-7957

Battelle
*The Business of Innovation*

CITY OF PASADENA INCORPORATED JUNE 1886

D.S.-209 & 210A

| | | | |
|---|---|---|---|
| DATE: FEBRUARY 2009 | SCALE: AS SHOWN | PASADENA WATER & POWER CITY OF PASADENA | SHEET NO 3 OF 79 SHEETS |
| DRAWN BY: CIVILTEC | | MONK HILL TREATMENT SYSTEM START UP PROCESS FLOW DIAGRAM | WORK ORDER 02557 / FILE NUMBER E-1670 |
| DESIGNED BY: CIVILTEC | | | |
| CHECKED BY: CIVILTEC | | | |
| SUBMITTED BY: CIVILTEC | | | |
| FIELD BOOKS | CALC BOOKS | APPROVED / APPROVED | REVISION |

H:\2007\27140-JR_MONHILL TREATMENT PLANT\DWG\SUBMITTALS\FINAL SUBMITTAL\27140-E-103.DWG (02-26-09 2:12:53 PM)

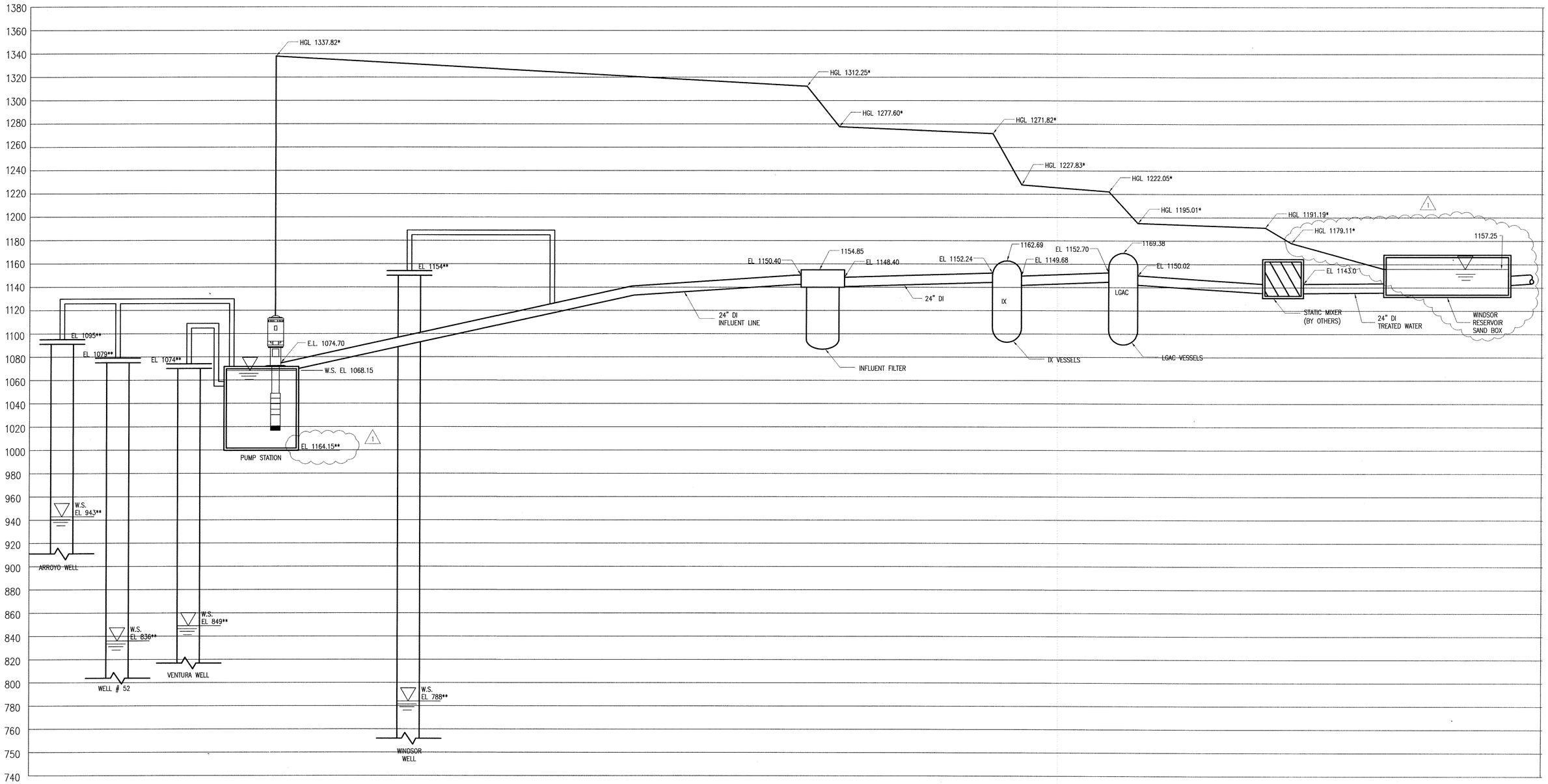


* HYDRAULIC GRADE LINE AT 7000 GPM
** FACILITY AND WATER SURFACE ELEVATIONS SHOWN FOR CLARITY
*** MINIMUM OPERATING DEPTH

G-104

| REVISION | | |
|---|---|---|
| NO. | DESCRIPTION | DATE |
| 1 | BUILDING DEPARTMENT PLAN CHECK COMMENTS | 01/05/09 |

REGISTERED PROFESSIONAL ENGINEER CHRISTOPHER SHEM HAWES 69578 10/30/2010 CIVIL STATE OF CALIFORNIA

APPROVED BY: C. Shem Hawes 69578 RCE — CHRISTOPHER SHEM HAWES — 2/25/08 DATE
APPROVED: _____ DATE
APPROVED: _____ DATE

PLANS PREPARED BY:
CIVILTEC engineering inc.
*General Civil, Municipal, Water and Wastewater Engineering, Planning, Construction Management and Surveying*
118 West Lime Avenue
Monrovia, Ca. 91016
Phone: (626) 357-0588
Fax: (626) 303-7957

Battelle
*The Business of Innovation*

CITY OF PASADENA INCORPORATED JUNE 1886

D.S.-209 & 210A

| | | | |
|---|---|---|---|
| DATE FEBRUARY 2009 | SCALE AS SHOWN | PASADENA WATER & POWER CITY OF PASADENA | SHEET NO 4 OF 79 SHEETS |
| DRAWN BY CIVILTEC; DESIGNED BY CIVILTEC; CHECKED BY CIVILTEC; SUBMITTED BY CIVILTEC | | MONK HILL TREATMENT SYSTEM HYDRAULIC PROFILE | WORK ORDER 02557 / FILE NUMBER E-1670 |
| FIELD BOOKS | CALC BOOKS | APPROVED / APPROVED | REVISION |

A:\2007\27140-JR, MONHILL TREATMENT PLANT\DWG\SUBMITTALS\FINAL SUBMITTAL\27140-G-104.DWG (02-26-09 14:32:24PM)

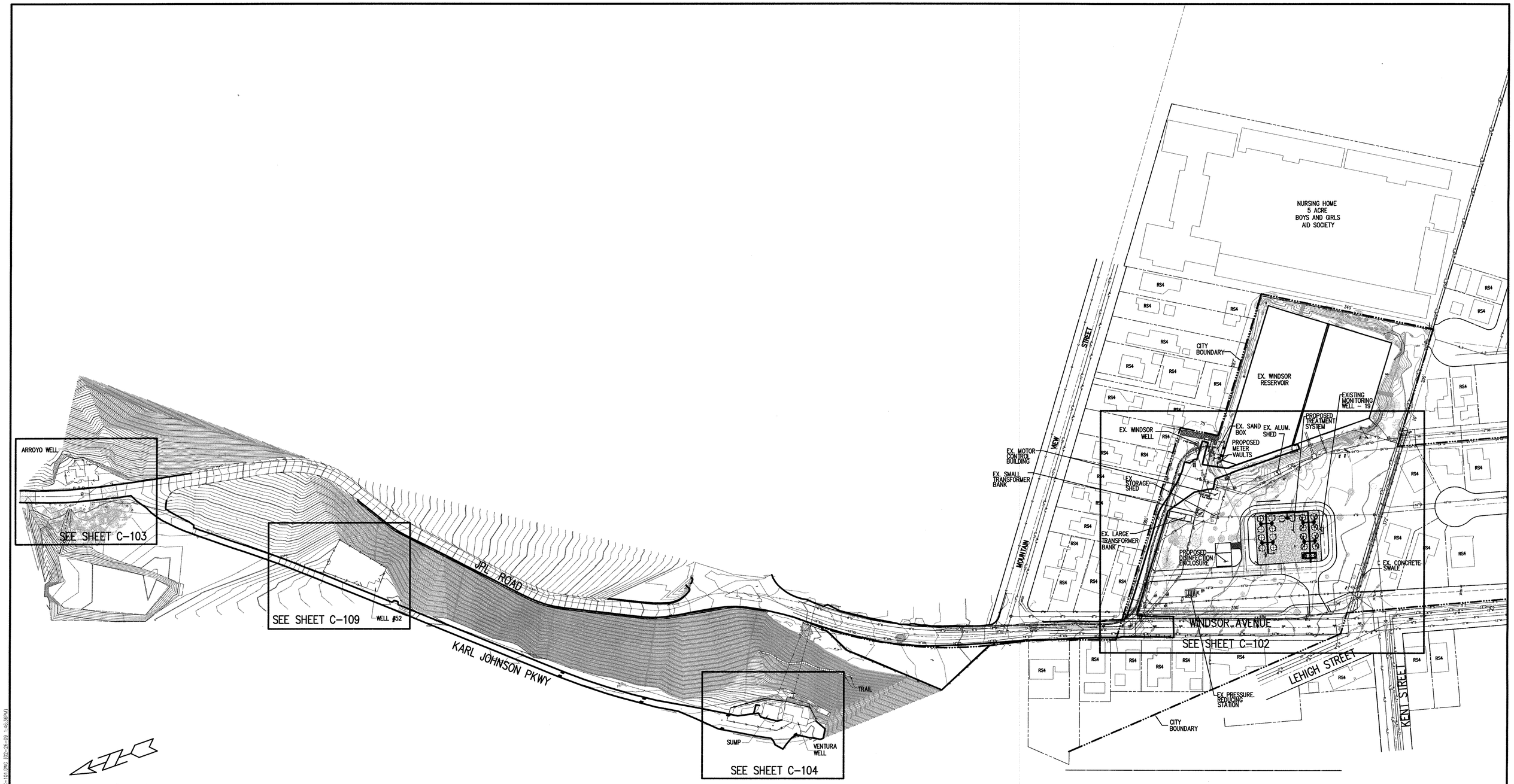


C-101

| REVISION | | |
|---|---|---|
| NO. | DESCRIPTION | DATE |
| | | |
| | | |
| | | |
| | | |

REGISTERED PROFESSIONAL ENGINEER
CHRISTOPHER SHEM HAWES
69578
6/30/2010
CIVIL
STATE OF CALIFORNIA

APPROVED BY:
C. Shem Hawes 69578 2/25/08
CHRISTOPHER SHEM HAWES RCE DATE
APPROVED: DATE
APPROVED: DATE

PLANS PREPARED BY:
CIVILTEC engineering inc.
*General Civil, Municipal, Water and Wastewater Engineering, Planning, Construction Management and Surveying*
118 West Lime Avenue
Monrovia, Ca. 91016
Phone: (626) 357-0588
Fax: (626) 303-7957

Battelle
*The Business of Innovation*

CITY OF PASADENA INCORPORATED JUNE, 1886

D.S.-209 & 210A

| DATE | SCALE | PASADENA WATER & POWER<br>CITY OF PASADENA | SHEET NO 5 OF 79 SHEETS |
|---|---|---|---|
| FEBRUARY 2009 | AS SHOWN | | |
| DRAWN BY CIVILTEC<br>DESIGNED BY CIVILTEC<br>CHECKED BY CIVILTEC<br>SUBMITTED BY CIVILTEC | | MONK HILL TREATMENT SYSTEM<br>GENERAL SITE PLAN | WORK ORDER 02557 / FILE NUMBER E-1670 |
| FIELD BOOKS | CALC BOOKS | APPROVED / APPROVED | REVISION |

X:\20071\27140-JPL MONKHILL TREATMENT PLANT\DWG\SUBMITTALS\FINAL SUBMITTAL\27140-C-101.DWG (02-26-09 1:46:32PM)

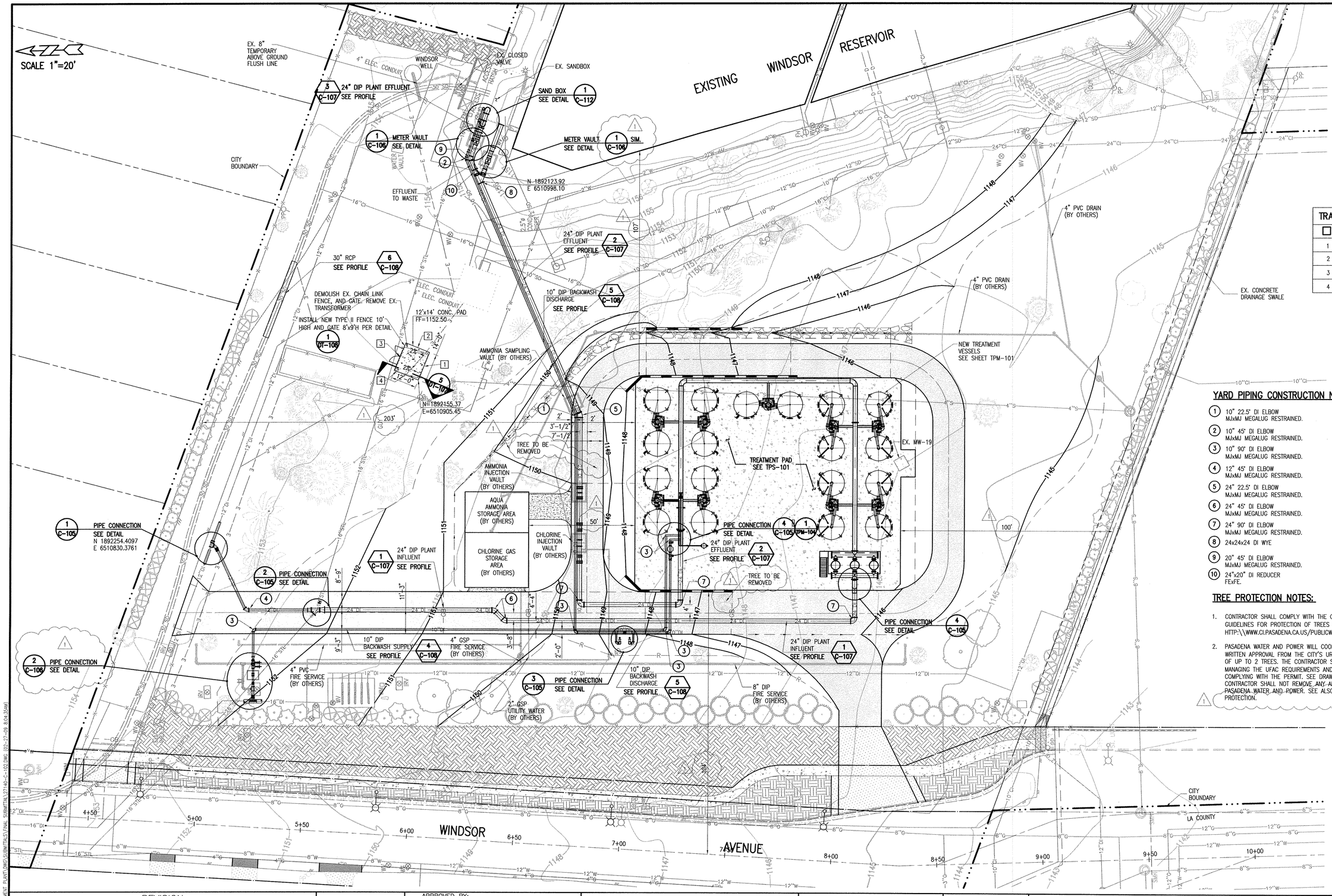


## TRANSF. SLAB LINE DATA TABLE

| ☐ | BEARING | DISTANCE |
|---|---|---|
| 1 | N66°23'22"W | 14 FT |
| 2 | N23°36'38"E | 12 FT |
| 3 | N66°23'22"W | 14 FT |
| 4 | N23°36'38"E | 12 FT |

## YARD PIPING CONSTRUCTION NOTES FOR THE WINDSOR SITE:

1. 10" 22.5° DI ELBOW MJxMJ MEGALUG RESTRAINED.
2. 10" 45° DI ELBOW MJxMJ MEGALUG RESTRAINED.
3. 10" 90° DI ELBOW MJxMJ MEGALUG RESTRAINED.
4. 12" 45° DI ELBOW MJxMJ MEGALUG RESTRAINED.
5. 24" 22.5° DI ELBOW MJxMJ MEGALUG RESTRAINED.
6. 24" 45° DI ELBOW MJxMJ MEGALUG RESTRAINED.
7. 24" 90° DI ELBOW MJxMJ MEGALUG RESTRAINED.
8. 24x24x24 DI WYE
9. 20" 45° DI ELBOW MJxMJ MEGALUG RESTRAINED.
10. 24"x20" DI REDUCER FExFE.

## TREE PROTECTION NOTES:

1. CONTRACTOR SHALL COMPLY WITH THE CITY'S TREE PROTECTION ORDINANCE AND THE "DESIGN GUIDELINES FOR PROTECTION OF TREES DURING CONSTRUCTION" AT HTTP:\\WWW.CI.PASADENA.CA.US/PUBLICWORKS/PRN/TREEORDINANCE.DEFAULT.ASP.
2. PASADENA WATER AND POWER WILL COORDINATE WITH THE CONTRACTOR FOR OBTAINING WRITTEN APPROVAL FROM THE CITY'S URBAN FORESTRY ADVISORY COUNCIL FOR THE REMOVAL OF UP TO 2 TREES. THE CONTRACTOR SHALL BE RESPONSIBLE FOR IMPLEMENTING AND MANAGING THE UFAC REQUIREMENTS AND THE CITY'S TREE PROTECTION ORDINANCE FOR COMPLYING WITH THE PERMIT. SEE DRAWING FOR THE 2 TREES THAT WILL BE REMOVED. CONTRACTOR SHALL NOT REMOVE ANY ADDITIONAL TREES WITHOUT FIRST CONSULTING WITH PASADENA WATER AND POWER. SEE ALSO IRRIGATION AND MONITORING PROGRAM FOR TREE PROTECTION.

C-102

| REVISION | | |
|---|---|---|
| NO. | DESCRIPTION | DATE |
| 1 | BUILDING DEPARTMENT PLAN CHECK COMMENTS | 01/05/09 |

REGISTERED PROFESSIONAL ENGINEER CHRISTOPHER SHEM HAWES 69578 6/30/2010 CIVIL STATE OF CALIFORNIA

APPROVED BY: CHRISTOPHER SHEM HAWES RCE 69578 — DATE 2/25/08
APPROVED: — DATE
APPROVED: — DATE

PLANS PREPARED BY: CIVILTEC engineering inc.
*General Civil, Municipal, Water and Wastewater Engineering, Planning, Construction Management and Surveying*
118 West Lime Avenue
Monrovia, Ca. 91016
Phone: (626) 357-0588
Fax: (626) 303-7957

Battelle — The Business of Innovation

CITY OF PASADENA INCORPORATED JUNE, 1886

D.S.-209 & 210A

| | | | |
|---|---|---|---|
| DATE: FEBRUARY 2009 | SCALE: AS SHOWN | PASADENA WATER & POWER CITY OF PASADENA | SHEET NO 6 OF 79 SHEETS |
| DRAWN BY: CIVILTEC | | MONK HILL TREATMENT SYSTEM | WORK ORDER: 02557 |
| DESIGNED BY: CIVILTEC | | TREATMENT SYSTEM- SITE PLAN/YARD PIPING | FILE NUMBER: E-1670 |
| CHECKED BY: CIVILTEC | | | |
| SUBMITTED BY: CIVILTEC | | | |
| FIELD BOOKS | CALC BOOKS | APPROVED / APPROVED | REVISION |

X:\20070.27140-PN_MONKHILL TREATMENT PLANT\DWGS\SUBMITTALS\FINAL SUBMITTAL\27140-C-102.DWG (03-27-09 8:04:43AM)

SCALE 1"=10'

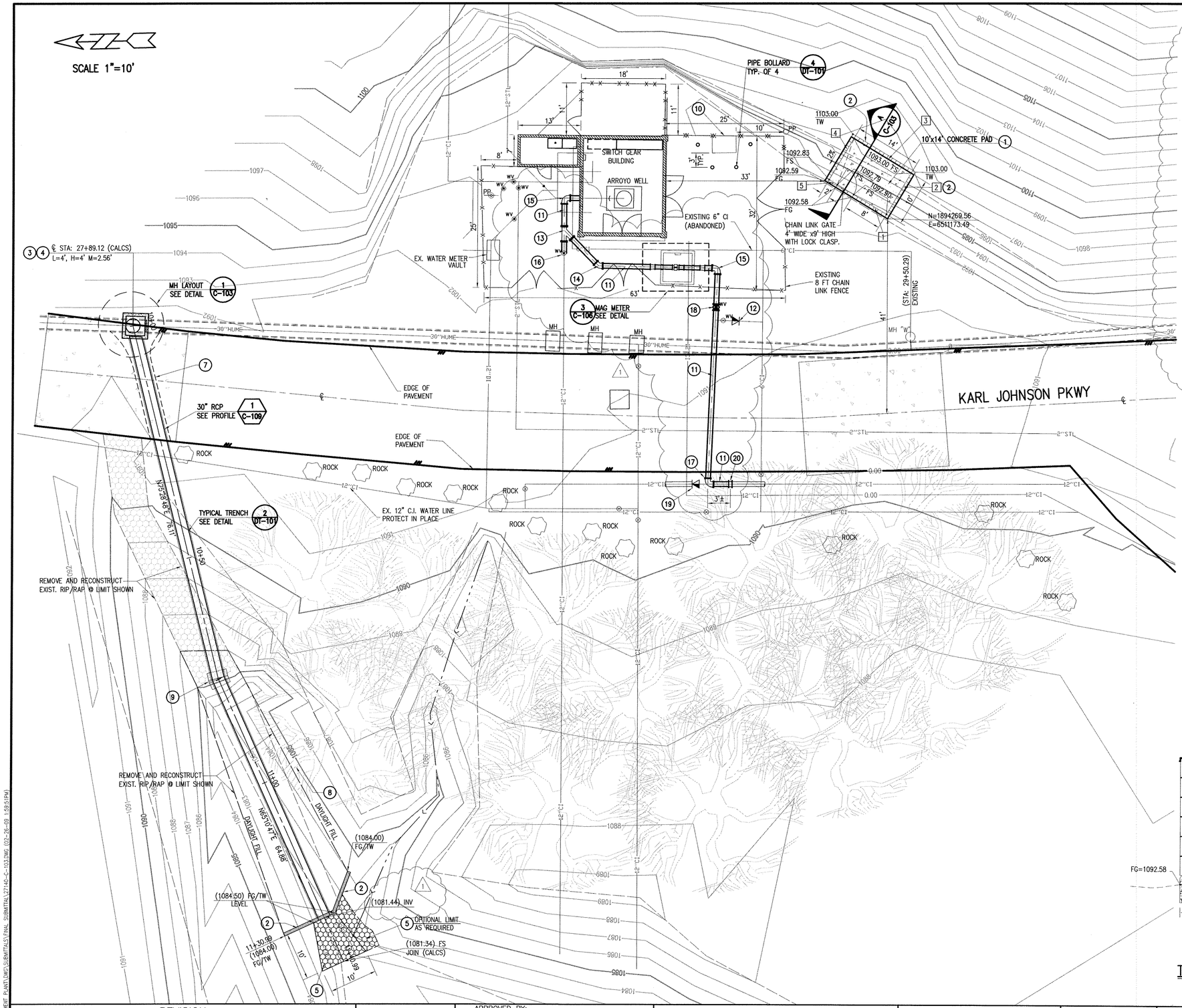


## GENERAL NOTES:

1. FOR TREE PROTECTION (SEE SHEET C-102 NOTE 1)
2. THE CONTRACTORS ATTENTION IS BROUGHT TO THE REQUIREMENTS OF CUP #5057 REGARDING NESTING AND MIGRATORY SEASON REQUIREMENTS.
3. TRAFFIC CONTROL AND WORK ACTIVITIES IN KARL JOHNSON PKWY SHALL BE PERFORMED IN ACCORDANCE WITH THE APPROVED CONSTRUCTION STAGING AND TRAFFIC MANAGEMENT PLAN.

## CONSTRUCTION NOTES FOR ARROYO WELL SITE:

1. CONSTRUCT PCC TRANSFORMER PAD PER SECTION A THIS SHEET AND PER DETAIL 2 ON SHEET DT-107.
2. CONSTRUCT FREESTANDING CMU WALL PER DETAIL 2 & 3 ON SHEET DT-107.
3. CONSTRUCT MANHOLE PER SPPWC STANDARD PLAN 321-1 MODIFIED PER PLAN.
4. INSTALL PRESSURE MANHOLE SHAFT AND PRESSURE PLATE PER SPPWC STD. PLAN 329-1.
5. UNGROUTED RIP RAP SWALE. DIMENSION PER PLAN RECONSTRUCT EXISTING RIP RAP AND MATCH GRADES PER PLAN, MAIN ROCK DIAMETER=8".
6. NOT USED
7. SAWCUT, REMOVE AND REPLACE KIND.
8. CONTRACTOR TO USE CAUTION WHEN WORKING NEAR TREES.
9. CONCRETE COLLAR PER SPPWC STANDARD PLAN 380-3.
10. ELECTRICAL SWITCH BOARD EQUIPMENT, SEE ELECTRICAL PLANS FOR DETAILS.
11. REPLACE EX. 12" CAST IRON PIPE WITH 12" DUCTILE IRON PIPE CLASS 52.
12. REMOVE EX. VALVE AND CAP EX. 6" CI PIPE.
13. REPLACE EX. 12" WYE, MJxMJxMJ, MEGALUG RESTRAIN ALL JOINTS, IN KIND
14. REPLACE EX. 12" 45° BEND WITH 12" DI 45°, MJxMJ, MEGALUG RESTRAIN ALL JOINTS, IN KIND
15. REPLACE EX. 12" 90° BEND WITH 90" DI 45°, MJxMJ, MEGALUG RESTRAIN ALL JOINTS, IN KIND
16. RECONNECT TO EX. 12" GATE VALVE, MEGALUG RESTRAIN ALL JOINTS
17. RECONNECT TO EX. 12" 90° DI BEND, MEGALUG RESTRAIN ALL JOINTS
18. REMOVE EX. 12" GATE VALVE.
19. REMOVE INTERFERING PORTIONS OF EX. 12" CI PIPE AND CAP.
20. INSTALL 12" TRANSITION COUPLING

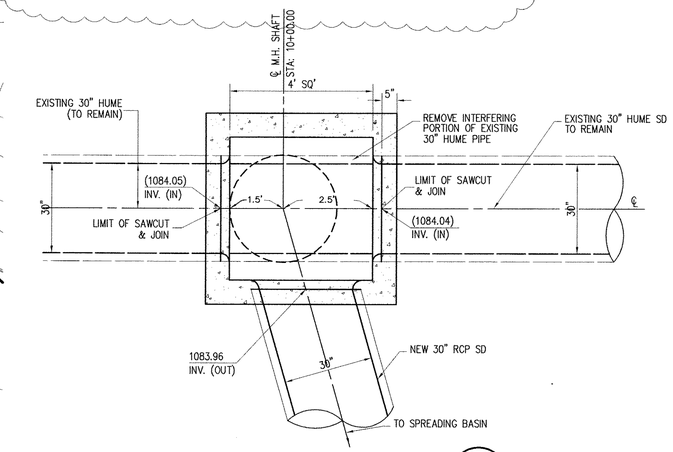


M.H. LAY-OUT DETAIL 1 C-103
NOT TO SCALE

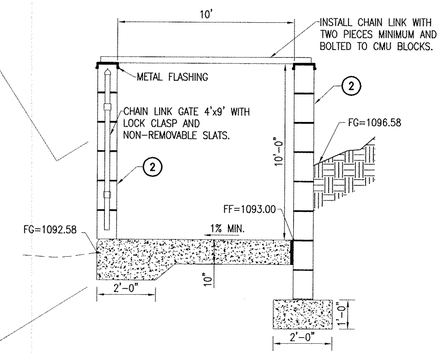


TRANSFORMER PAD A C-103
NOT TO SCALE

| RET. WALL LINE DATA TABLE | | |
|---|---|---|
| | BEARING | LENGTH |
| 1 | N30°17'14"E | 8.00' |
| 2 | N59°42'46"W | 10.67' |
| 3 | N30°17'14"E | 15.33' |
| 4 | N59°42'46"W | 10..67' |
| 5 | N30°17'14"E | 2.00' |

C-103

| REVISION | | |
|---|---|---|
| NO. | DESCRIPTION | DATE |
| 1 | BUILDING DEPARTMENT PLAN CHECK COMMENTS | 01/05/09 |

REGISTERED PROFESSIONAL ENGINEER CHRISTOPHER SHEM HAWES 69578 6/20/2010 CIVIL STATE OF CALIFORNIA

APPROVED BY: CHRISTOPHER SHEM HAWES RCE 69578 2/25/08 DATE
APPROVED: DATE
APPROVED: DATE

PLANS PREPARED BY: CIVILTEC engineering inc.
*General Civil, Municipal, Water and Wastewater Engineering, Planning, Construction Management and Surveying*
118 West Lime Avenue
Monrovia, Ca. 91016
Phone: (626) 357-0588
Fax: (626) 303-7957

Battelle
*The Business of Innovation*

CITY OF PASADENA INCORPORATED JUNE 1886

D.S.-209 & 210A

| | | | |
|---|---|---|---|
| DATE FEBRUARY 2009 | SCALE AS SHOWN | PASADENA WATER & POWER CITY OF PASADENA | SHEET NO 7 OF 79 SHEETS |
| DRAWN BY CIVILTEC | | MONK HILL TREATMENT SYSTEM ARROYO- SITE PLAN/YARD PIPING | WORK ORDER 02557 / FILE NUMBER E-1670 |
| DESIGNED BY CIVILTEC | | | |
| CHECKED BY CIVILTEC | | | |
| SUBMITTED BY CIVILTEC | | | |
| FIELD BOOKS | CALC BOOKS | APPROVED / APPROVED | REVISION |

H:\2007\27142-JR_MONKHILL TREATMENT PLANT\DWG\SUBMITTALS\FINAL SUBMITTAL\27142-C-103.DWG (02-26-09 1:58:51PM)

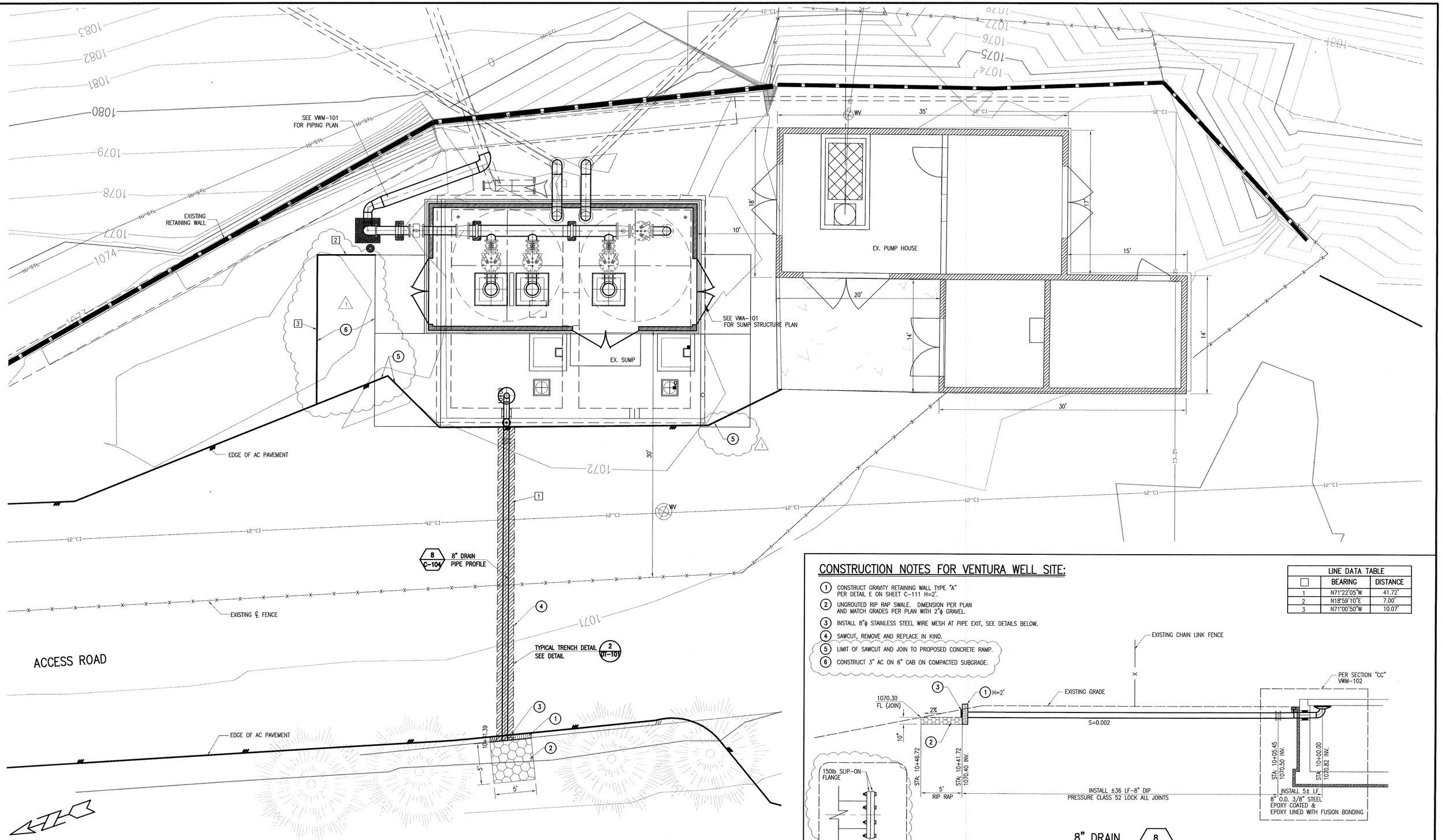


## CONSTRUCTION NOTES FOR VENTURA WELL SITE:

1. CONSTRUCT GRAVITY RETAINING WALL TYPE "A" PER DETAIL E ON SHEET C-111 H=2'.
2. UNGROUTED RIP RAP SWALE. DIMENSION PER PLAN AND MATCH GRADES PER PLAN WITH 2"ϕ GRAVEL.
3. INSTALL 8"ϕ STAINLESS STEEL WIRE MESH AT PIPE EXIT, SEE DETAILS BELOW.
4. SAWCUT, REMOVE AND REPLACE IN KIND.
5. LIMIT OF SAWCUT AND JOIN TO PROPOSED CONCRETE RAMP.
6. CONSTRUCT 3" AC ON 6" CAB ON COMPACTED SUBGRADE.

| LINE DATA TABLE | | |
|---|---|---|
| | BEARING | DISTANCE |
| 1 | N71°22'05"W | 41.72' |
| 2 | N18°59'10"E | 7.00' |
| 3 | N71°00'50"W | 10.07' |




8" DRAIN (8 / C-104)
SCALE: 1"=5' HORIZONTAL
1"=5' VERTICAL

C-104

| REVISION | | |
|---|---|---|
| NO. | DESCRIPTION | DATE |
| 1 | BUILDING DEPARTMENT PLAN CHECK COMMENTS | 01/05/09 |

REGISTERED PROFESSIONAL ENGINEER CHRISTOPHER SHEM HAWES 69578 6/30/2010 CIVIL STATE OF CALIFORNIA

APPROVED BY: CHRISTOPHER SHEM HAWES RCE 69578 — DATE 2/25/08
APPROVED: — DATE
APPROVED: — DATE

PLANS PREPARED BY:
CIVILTEC engineering inc.
*General Civil, Municipal, Water and Wastewater Engineering, Planning, Construction Management and Surveying*
118 West Lime Avenue
Monrovia, Ca. 91016
Phone: (626) 357-0588
Fax: (626) 303-7957

Battelle
*The Business of Innovation*

CITY OF PASADENA INCORPORATED JUNE 1886

D.S.-209 & 210A

| | | |
|---|---|---|
| DATE FEBRUARY 2009 | SCALE AS SHOWN | PASADENA WATER & POWER CITY OF PASADENA |
| DRAWN BY CIVILTEC | | MONK HILL TREATMENT SYSTEM VENTURA WELL- SITEPLAN/YARD PIPING |
| DESIGNED BY CIVILTEC | | |
| CHECKED BY CIVILTEC | | |
| SUBMITTED BY CIVILTEC | | |
| FIELD BOOKS | CALC BOOKS | APPROVED / APPROVED |

SHEET NO 8 OF 79 SHEETS
WORK ORDER 02557
FILE NUMBER E-1670
REVISION

X:\2007\27140-JR, MONKHILL TREATMENT PLANT\DWG\SUBMITTALS\FINAL SUBMITTAL\27140-C-104.DWG (02-26-09 2:07:39PM)

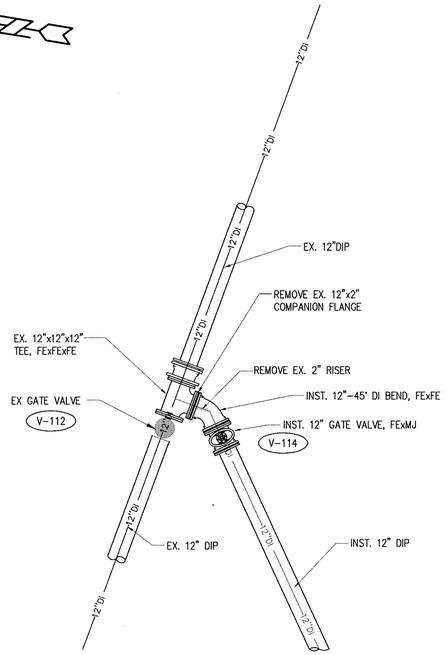


PLAN VIEW

PIPE CONNECTION 1 / C-102

1/4"=1' SCALE

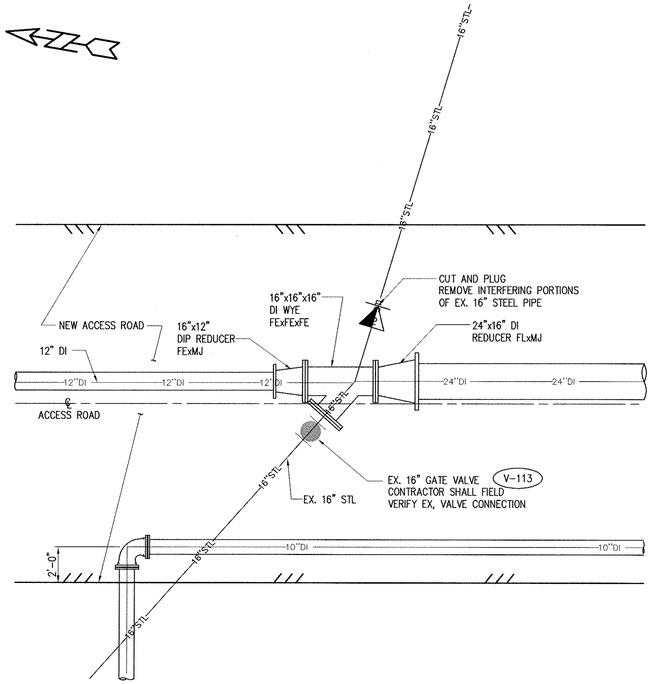


PLAN VIEW

PIPE CONNECTION 2 / C-102

1/4"=1' SCALE

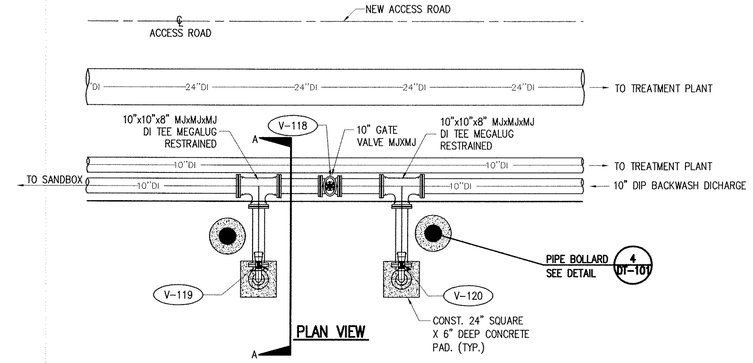


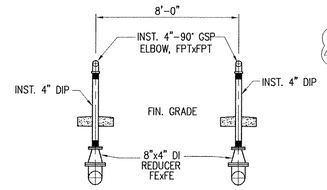


SECTION

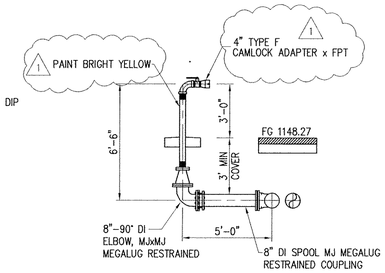


SECTION A-A

PIPE CONNECTION 3 / C-102

SCALE: 1/4"=1'-0"

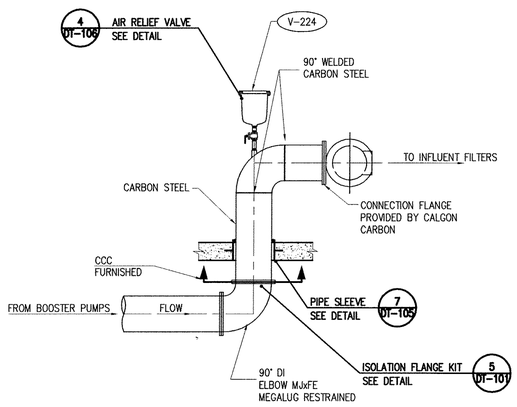


SECTION

INFLUENT LINE

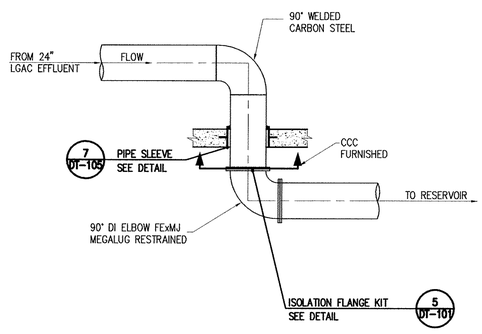


SECTION

EFFLUENT LINE

PIPE CONNECTION 4 / C-102

1/4"=1' SCALE

C-105

| REVISION | | |
|---|---|---|
| NO. | DESCRIPTION | DATE |
| 1 | BUILDING DEPARTMENT PLAN CHECK COMMENTS | 01/05/09 |

REGISTERED PROFESSIONAL ENGINEER CHRISTOPHER SHEM HAWES 69578 6/30/2010 CIVIL STATE OF CALIFORNIA

APPROVED BY: 69578 2/25/08
CHRISTOPHER SHEM HAWES RCE DATE
APPROVED: DATE
APPROVED: DATE

PLANS PREPARED BY:

CIVILTEC engineering inc.

*General Civil, Municipal, Water and Wastewater Engineering, Planning, Construction Management and Surveying*

118 West Lime Avenue
Monrovia, Ca. 91016
Phone: (626) 357-0588
Fax: (626) 303-7957

Battelle
*The Business of Innovation*

CITY OF PASADENA INCORPORATED JUNE 1886

D.S.-209 & 210A

| | | | |
|---|---|---|---|
| DATE FEBRUARY 2009 | SCALE AS SHOWN | PASADENA WATER & POWER CITY OF PASADENA | SHEET NO 9 OF 79 SHEETS |
| DRAWN BY CIVILTEC / DESIGNED BY CIVILTEC / CHECKED BY CIVILTEC / SUBMITTED BY CIVILTEC | | MONK HILL TREATMENT SYSTEM YARD PIPING CONNECTIONS | WORK ORDER 02557 / FILE NUMBER E-1670 |
| FIELD BOOKS / CALC BOOKS | | APPROVED / APPROVED | REVISION |

X:\2007\27140-JPL MONKHILL TREATMENT PLANT\DWG\SUBMITTALS\FINAL SUBMITTAL\27140-C-105.DWG (02-26-09 2:03:06PM)

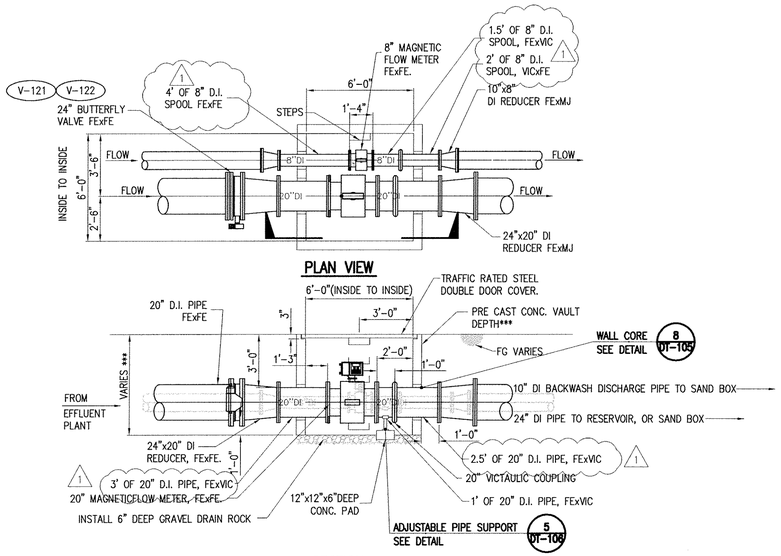


*** PROVIDED VAULT DEPTH FROM FINISHED GRADE TO GRAVEL BED. DEPTH TO SAND BOX METERING STATION = ±6'-6". DEPTH TO RESERVOIR METERING STATION = ±7'-0"

## FLOW METER AND VAULT DETAIL 1 / C-102

NOT TO SCALE

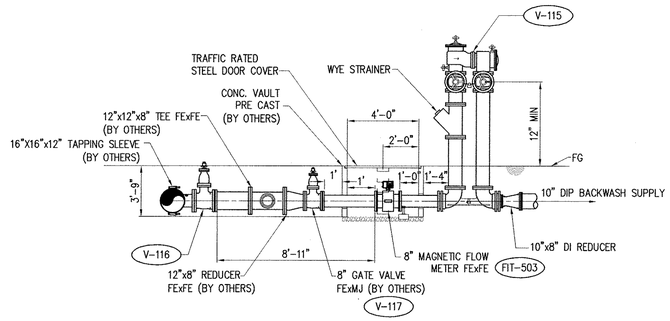


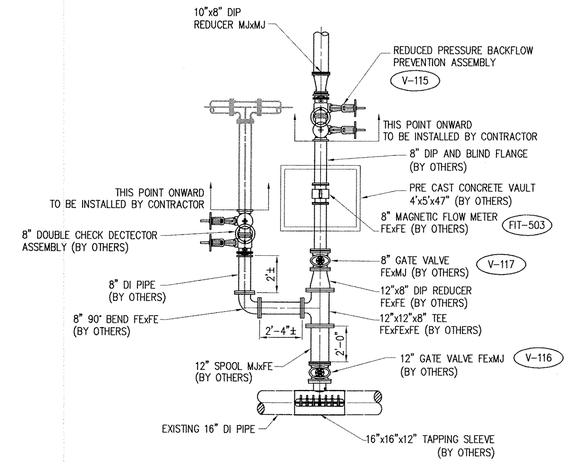


## PIPE CONNECTION 2 / C-102

1/4"=1' SCALE

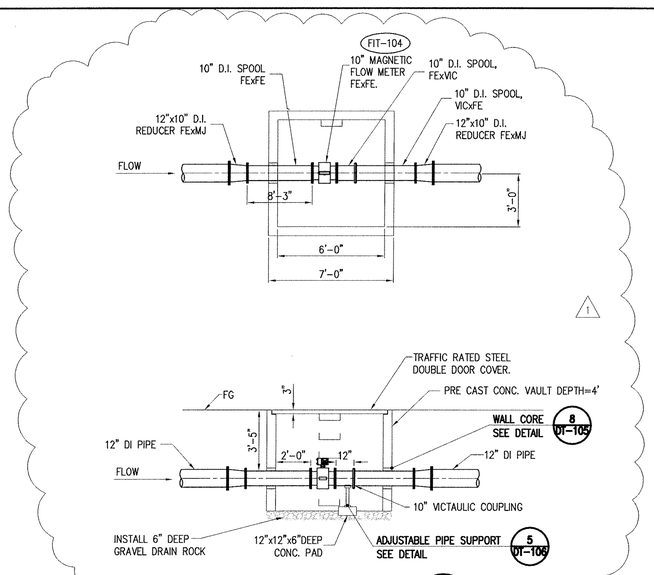


## FLOW METER AND VAULT DETAIL 3 / C-103

NOT TO SCALE

C-106

| REVISION | | |
|---|---|---|
| NO. | DESCRIPTION | DATE |
| 1 | BUILDING DEPARTMENT PLAN CHECK COMMENTS | 01/05/09 |

REGISTERED PROFESSIONAL ENGINEER CHRISTOPHER SHEM HAWES 69578 6/30/2010 CIVIL STATE OF CALIFORNIA

APPROVED BY: CHRISTOPHER SHEM HAWES RCE 69578 — DATE 2/25/08
APPROVED: — DATE
APPROVED: — DATE

PLANS PREPARED BY:

CIVILTEC engineering inc.

*General Civil, Municipal, Water and Wastewater Engineering, Planning, Construction Management and Surveying*

118 West Lime Avenue
Monrovia, Ca. 91016
Phone: (626) 357-0588
Fax: (626) 303-7957

Battelle
*The Business of Innovation*

CITY OF PASADENA INCORPORATED JUNE 1886

D.S.-209 & 210A

| | | | |
|---|---|---|---|
| DATE FEBRUARY 2009 | SCALE AS SHOWN | PASADENA WATER & POWER CITY OF PASADENA | SHEET NO 10 OF 79 SHEETS |
| DRAWN BY CIVILTEC; DESIGNED BY CIVILTEC; CHECKED BY CIVILTEC; SUBMITTED BY CIVILTEC | | MONK HILL TREATMENT SYSTEM YARD PIPING CONNECTIONS | WORK ORDER 02557 / FILE NUMBER E-1670 |
| FIELD BOOKS | CALC BOOKS | APPROVED / APPROVED | REVISION |

X:\2007\27140-JR, MONKHILL TREATMENT PLANT\DWG\SUBMITTALS\FINAL SUBMITTAL\27140-C-106.DWG (02-26-09 2:03:56PM)

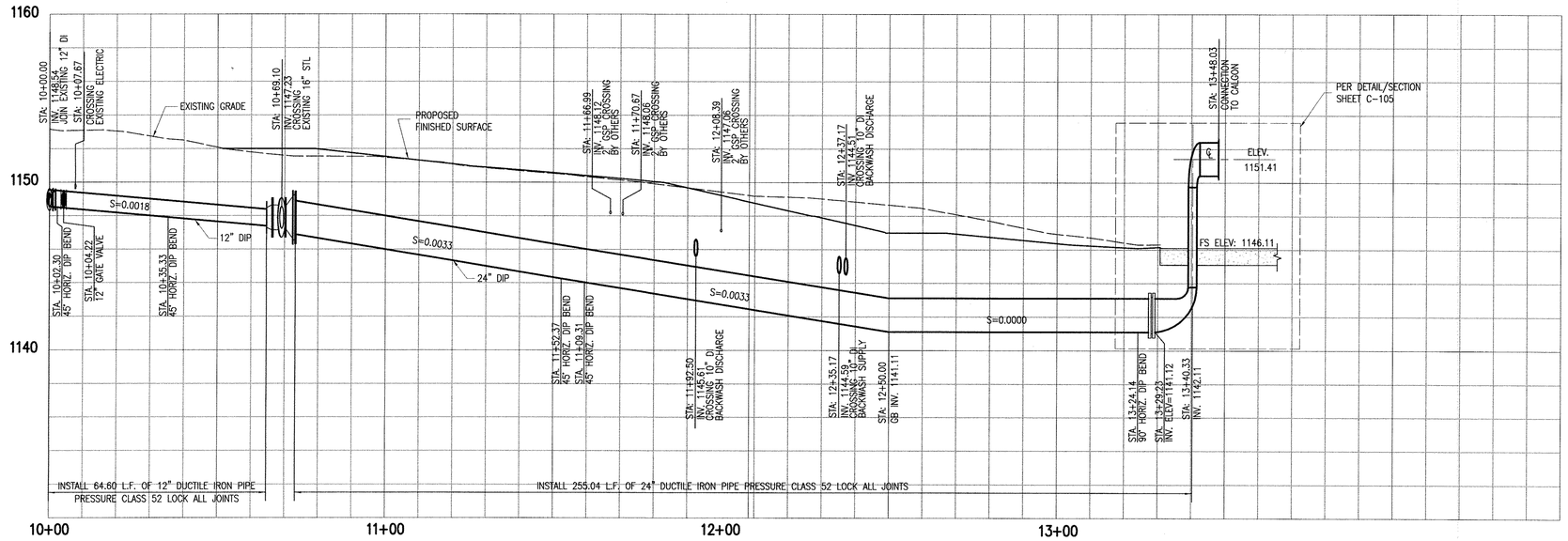


## INFLUENT LINE (1 / C-102)

SCALE: HORIZ 1"=20'
VERT 1"=4'

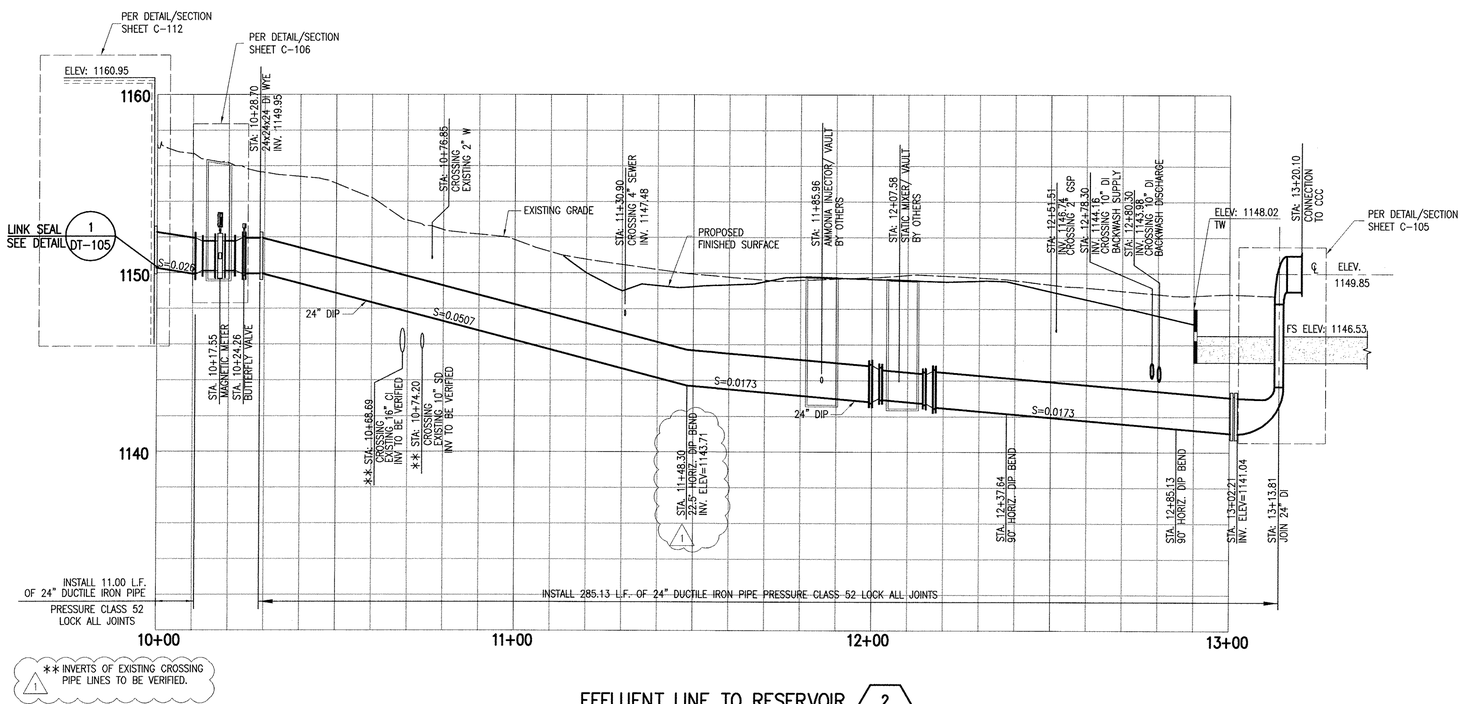


** INVERTS OF EXISTING CROSSING PIPE LINES TO BE VERIFIED. (1)

## EFFLUENT LINE TO RESERVOIR (2 / C-102)

SCALE: HORIZ 1"=20'
VERT 1"=4'

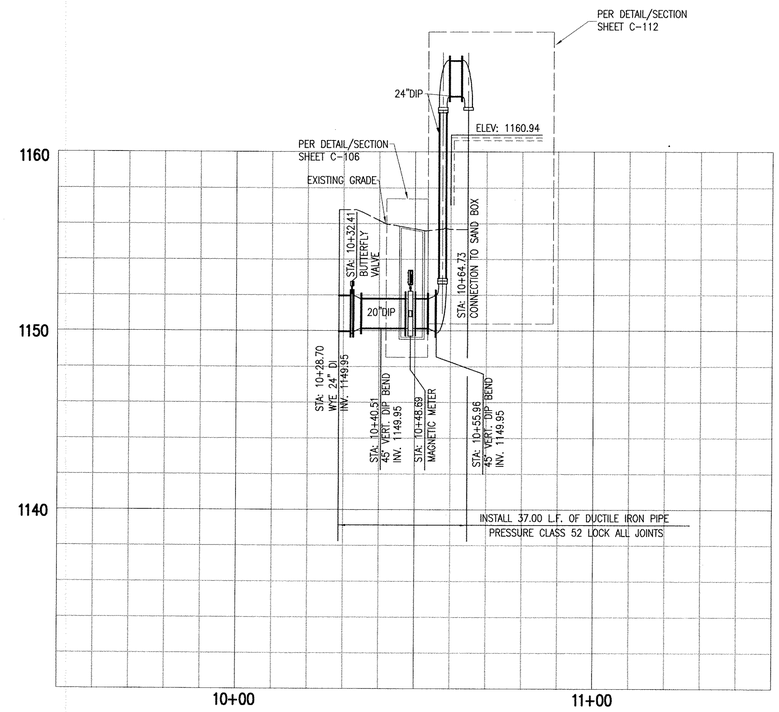


## EFFLUENT LINE TO SAND BOX (3 / C-102)

SCALE: HORIZ 1"=20'
VERT 1"=4'

C-107

| REVISION | | |
|---|---|---|
| NO. | DESCRIPTION | DATE |
| 1 | BUILDING DEPARTMENT PLAN CHECK COMMENTS | 01/05/09 |

REGISTERED PROFESSIONAL ENGINEER — CHRISTOPHER SHEM HAWES — 69578 — 6/30/2010 — CIVIL — STATE OF CALIFORNIA

APPROVED BY: C. Shem Hawes 69578 — CHRISTOPHER SHEM HAWES RCE — 2/25/08 DATE
APPROVED: _____ DATE
APPROVED: _____ DATE

PLANS PREPARED BY:
CIVILTEC engineering inc.
*General Civil, Municipal, Water and Wastewater Engineering, Planning, Construction Management and Surveying*
118 West Lime Avenue
Monrovia, Ca. 91016
Phone: (626) 357-0588
Fax: (626) 303-7957

Battelle
*The Business of Innovation*

CITY OF PASADENA — INCORPORATED JUNE 1886

D.S.-209 & 210A

| DATE | SCALE | | |
|---|---|---|---|
| FEBRUARY 2009 | AS SHOWN | PASADENA WATER & POWER<br>CITY OF PASADENA | SHEET NO 11 OF 79 SHEETS |
| DRAWN BY CIVILTEC<br>DESIGNED BY CIVILTEC<br>CHECKED BY CIVILTEC<br>SUBMITTED BY CIVILTEC | | MONK HILL TREATMENT SYSTEM<br>PIPING PROFILES | WORK ORDER 02557 / FILE NUMBER E-1670 |
| FIELD BOOKS / CALC BOOKS | | APPROVED / APPROVED | REVISION |

X:\2007\27140-PL MONKHILL TREATMENT PLANT\DWG\SUBMITTALS\FINAL SUBMITTAL\27140-C-107.DWG (02-25-09 2:04:24PM)

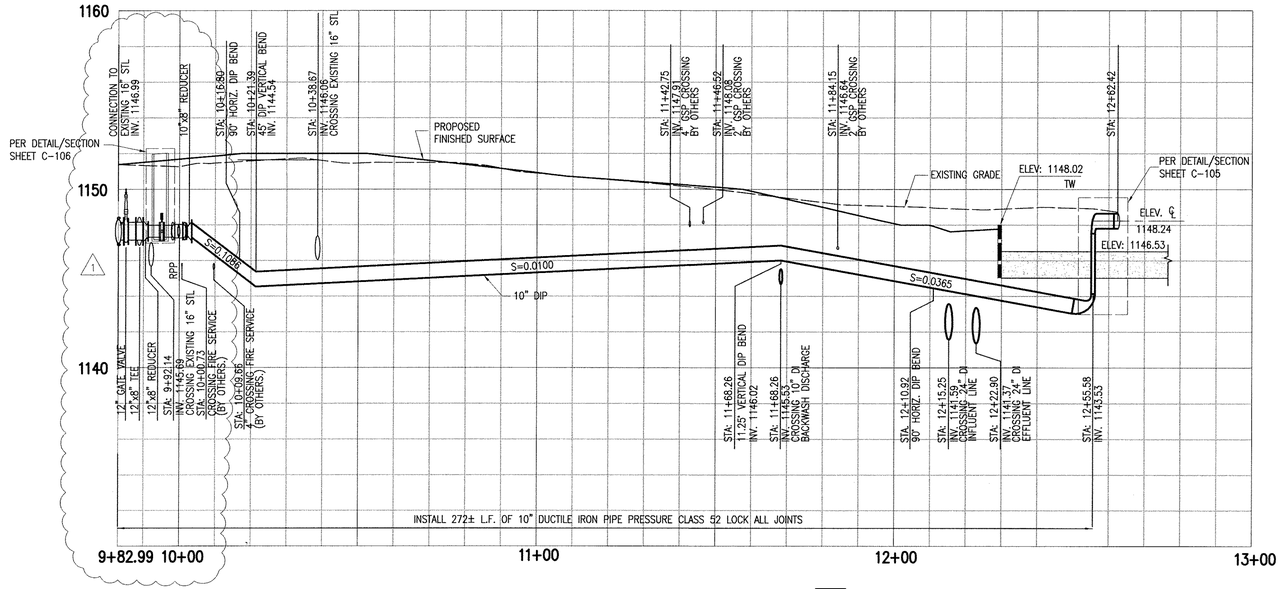


## BACKWASH SUPPLY (4 / C-102)

SCALE: HORIZ 1"=20'
VERT 1"=4'

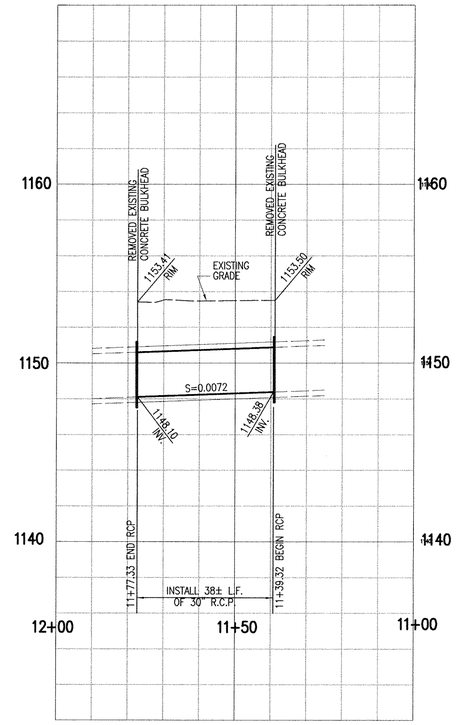


## 30" RCP RECONNECT (6 / C-102)

SCALE: HORIZ 1"=20'
VERT 1"=4'

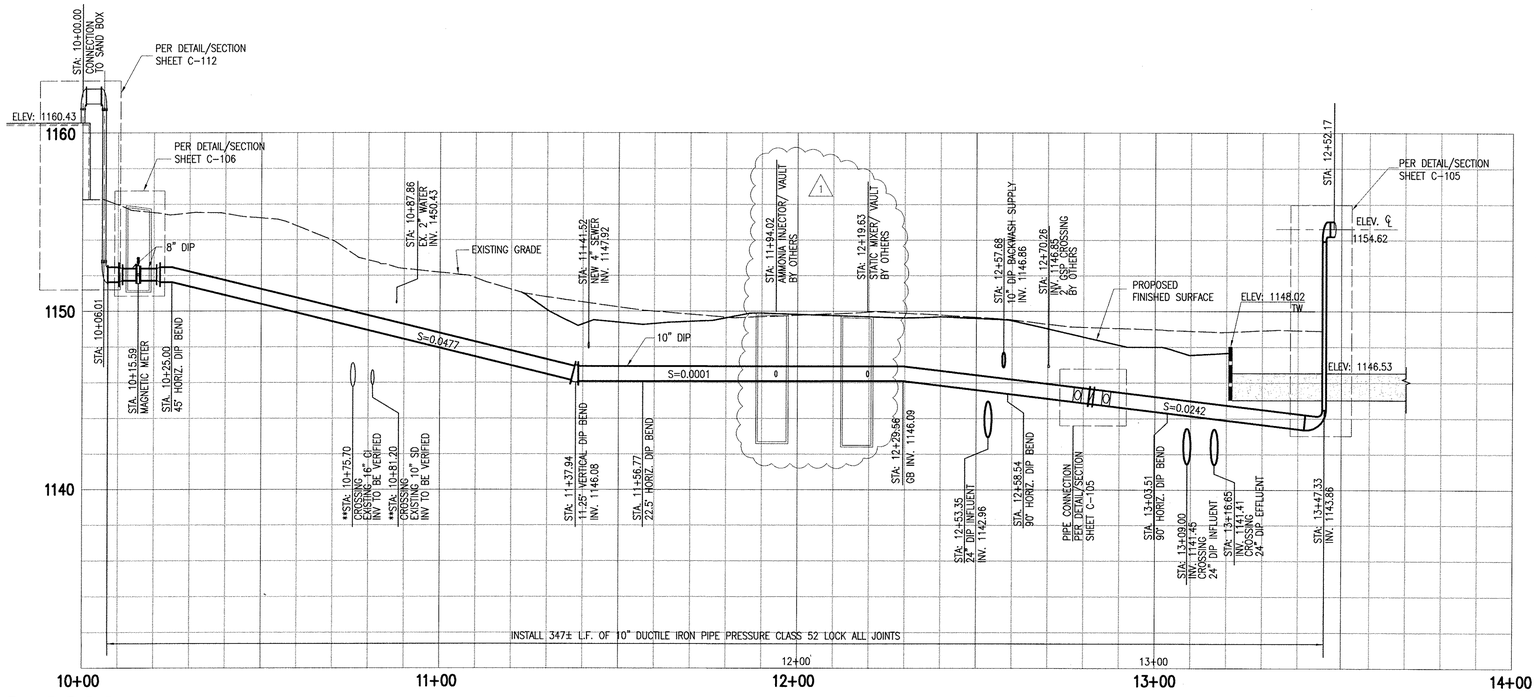


** INVERTS OF EXISTING CROSSING PIPE LINES TO BE VERIFIED.

## BACKWASH DISCHARGE (5 / C-102)

SCALE: HORIZ 1"=20'
VERT 1"=4'

C-108

| REVISION | | |
|---|---|---|
| NO. | DESCRIPTION | DATE |
| 1 | BUILDING DEPARTMENT PLAN CHECK COMMENTS | 01/05/09 |

REGISTERED PROFESSIONAL ENGINEER CHRISTOPHER SHEM HAWES 69578 6/30/2010 CIVIL STATE OF CALIFORNIA

APPROVED BY: C. Shem Hawes 69578 CHRISTOPHER SHEM HAWES RCE — DATE 2/25/08
APPROVED: — DATE
APPROVED: — DATE

PLANS PREPARED BY:
CIVILTEC engineering inc.
*General Civil, Municipal, Water and Wastewater Engineering, Planning, Construction Management and Surveying*
118 West Lime Avenue
Monrovia, Ca. 91016
Phone: (626) 357-0588
Fax: (626) 303-7957

Battelle
*The Business of Innovation*

CITY OF PASADENA INCORPORATED JUNE 1886

D.S.-209 & 210A

| | | | |
|---|---|---|---|
| DATE FEBRUARY 2009 | SCALE AS SHOWN | PASADENA WATER & POWER CITY OF PASADENA | SHEET NO 12 OF 79 SHEETS |
| DRAWN BY CIVILTEC / DESIGNED BY CIVILTEC / CHECKED BY CIVILTEC / SUBMITTED BY CIVILTEC | | MONK HILL TREATMENT SYSTEM PIPING PROFILES | WORK ORDER 02557 / FILE NUMBER E-1670 |
| FIELD BOOKS | CALC BOOKS | APPROVED / APPROVED | REVISION |

X:\2007\27140-PR_MONKHILL TREATMENT PLANT\DWG\SUBMITTALS\FINAL SUBMITTAL\27140-C-108.DWG (02-26-09 2:04:58PM)

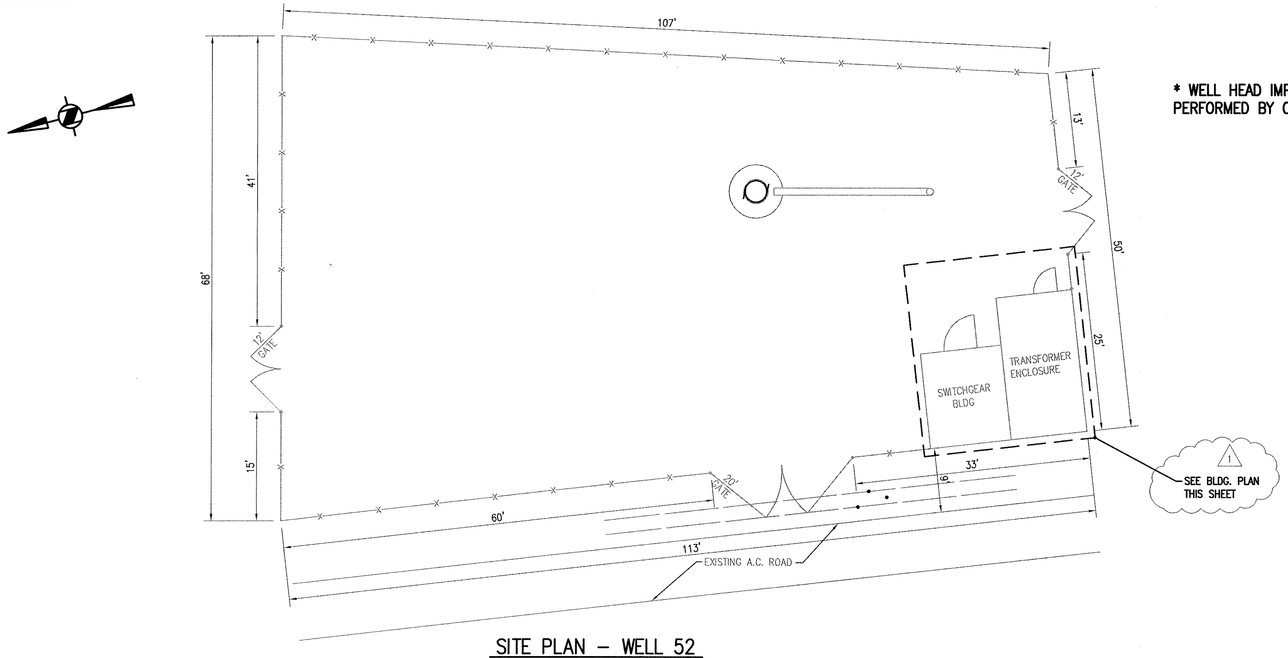


* WELL HEAD IMPROVEMENTS TO BE PERFORMED BY OTHERS.

## SITE PLAN – WELL 52

SCALE: 1"=10'-0"

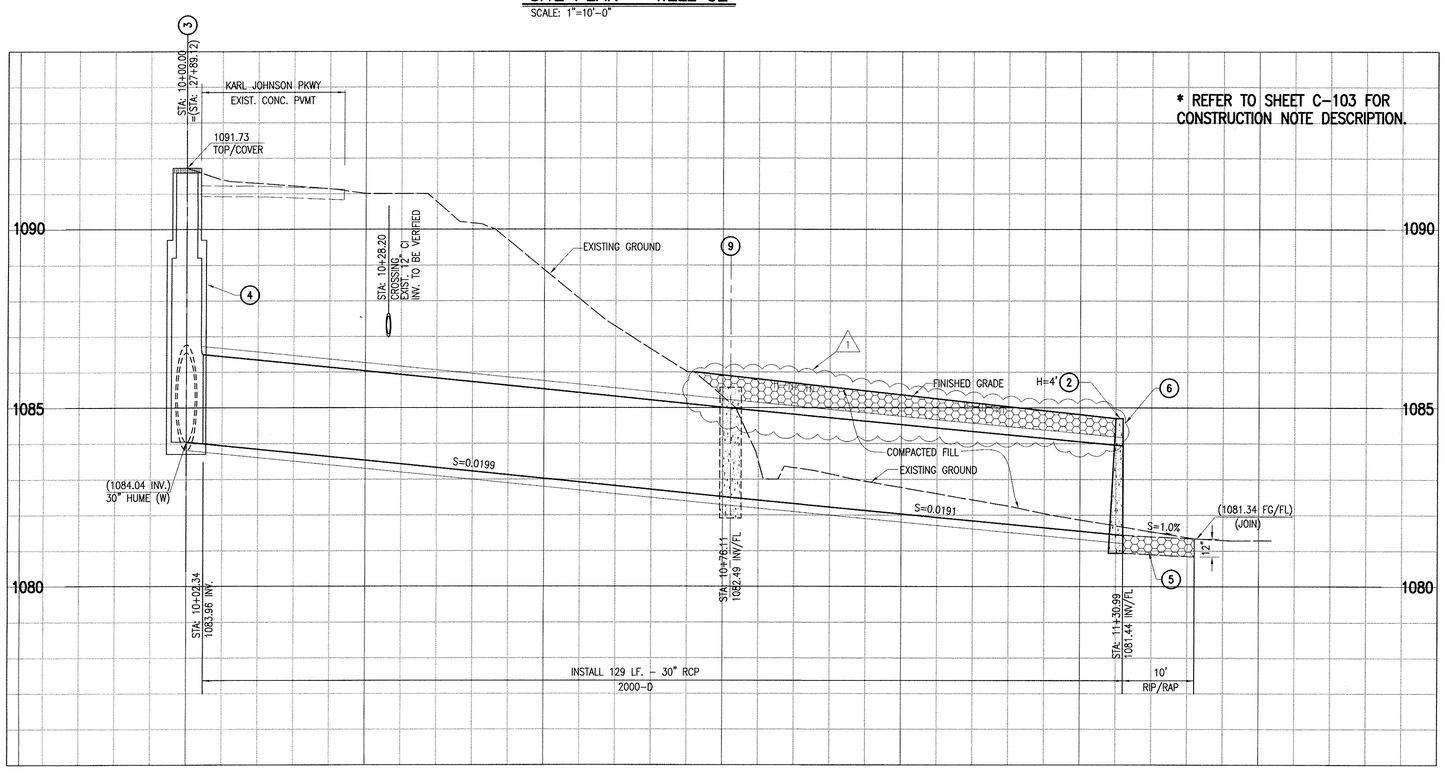


* REFER TO SHEET C-103 FOR CONSTRUCTION NOTE DESCRIPTION.

## 30" RCP PROFILE (1 / C-103)

SCALE: 1"=10' HORIZONTAL
1"=4' VERTICAL

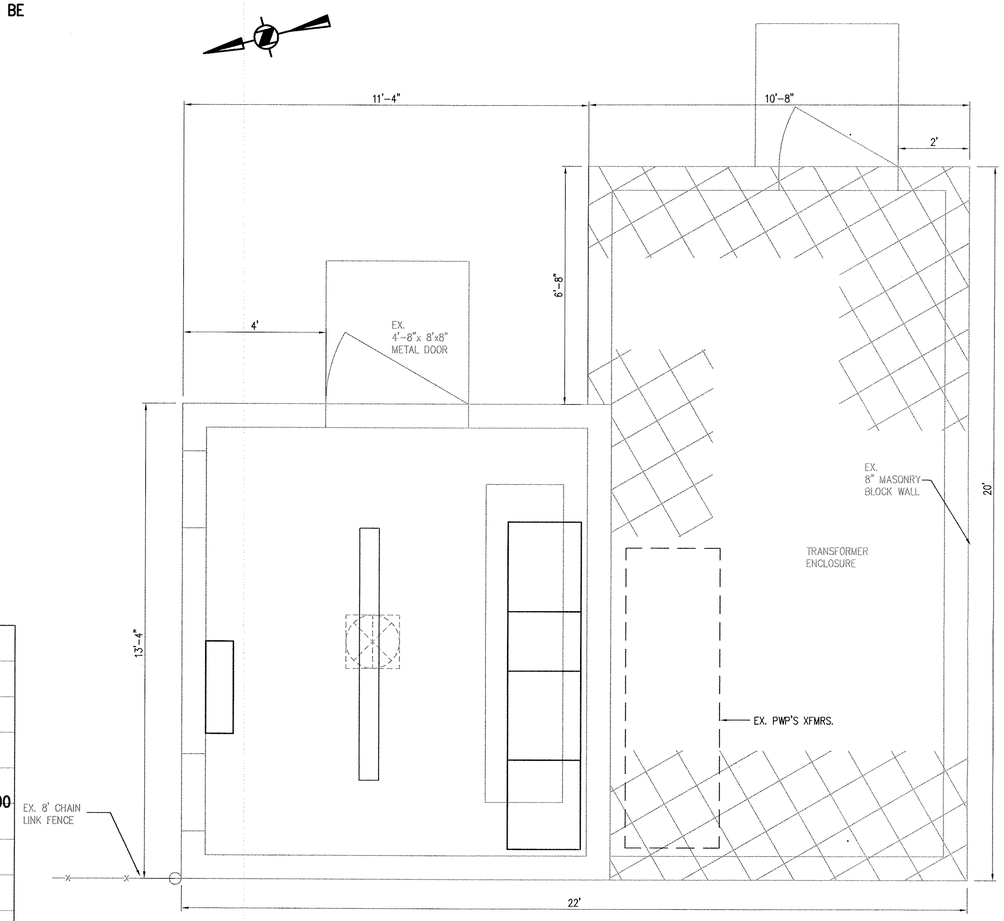


* SEE ELECTRICAL PLANS FOR DETAILS

## WELL 52 BLDG PLAN

SCALE: 1/2"=1'-0"

C-109

| REVISION | | |
|---|---|---|
| NO. | DESCRIPTION | DATE |
| 1 | BUILDING DEPARTMENT PLAN CHECK COMMENTS | 01/05/09 |

REGISTERED PROFESSIONAL ENGINEER CHRISTOPHER SHEM HAWES 69578 6/30/2010 CIVIL STATE OF CALIFORNIA

APPROVED BY: C. Shem Hawes 69578 CHRISTOPHER SHEM HAWES RCE — 2/25/08 DATE
APPROVED: — DATE
APPROVED: — DATE

PLANS PREPARED BY:
CIVILTEC engineering inc.
*General Civil, Municipal, Water and Wastewater Engineering, Planning, Construction Management and Surveying*
118 West Lime Avenue
Monrovia, Ca. 91016
Phone: (626) 357-0588
Fax: (626) 303-7957

Battelle
*The Business of Innovation*

CITY OF PASADENA INCORPORATED JUNE 1886

D.S.-209 & 210A

| | | | |
|---|---|---|---|
| DATE: FEBRUARY 2009 | SCALE: AS SHOWN | PASADENA WATER & POWER CITY OF PASADENA | SHEET NO 13 OF 79 SHEETS |
| DRAWN BY CIVILTEC; DESIGNED BY CIVILTEC; CHECKED BY CIVILTEC; SUBMITTED BY CIVILTEC | | MONK HILL TREATMENT SYSTEM 30" RCP PROFILES/ WELL 52 PLAN | WORK ORDER 02557 / FILE NUMBER E-1670 |
| FIELD BOOKS | CALC BOOKS | APPROVED / APPROVED | REVISION |

K:\20071\2710-C-IR_MONKHILL TREATMENT PLANT\DWG\SUBMITTALS\FINAL SUBMITTAL\27140-C-109.DWG (02-26-09 2:06:10PM)

SCALE 1"=20'

## GRADING CONSTRUCTION NOTES:

1. CONSTRUCT DRIVEWAY-DUSTPAN TYPE (COMMERCIAL) PER CITY OF PASADENA STD. PLAN S-403. (MODIFIED PER PLAN) REF: STREET PLAN.
1B. LIMIT OF SAWCUT AND JOIN. REF: STREET PLAN.
2. CONSTRUCT CURB AND GUTTER PER CITY OF PASADENA STD. PLAN S-406. - 8"CF. REF: STREET PLAN.
3. RESTORATION OF ASPHALT STREET EXCAVATION, PER CITY OF PASADENA STD. PLAN S-416. REF: STREET PLAN.
4. CONSTRUCT PCC SIDEWALK PER CITY OF PASADENA STD. PLAN S-421, W=PER PLAN. REF: STREET PLAN.
5. CONSTRUCT 3"AC ON 6" CAB ON COMPACTED SUBGRADE.
6. UNGROUTED RIP RAP SWALE. DIMENSION PER PLAN, MAX ROCK DIAMETER = 8"
7. GRADED SWALE WITH GRAVEL BED. SEE DETAIL D ON SHT.C-111
8. CONSTRUCT GRAVITY RETAINING WALL (TYPE PER PLAN). SEE DETAIL E ON SHT. C-111
9. PARKWAY DRAIN PER SPPWC STD. PLAN 151-1 S=4', WITH INLET TYPE 2.
10. EXISTING MONITORING WELL TO BE PROTECTED IN PLACE.
11. PROVIDE CALTRANS APPROVED FLEXIBLE EDGE DELINEATORS.

NOTE: **
EXERCISE EXTRA CAUTION WHEN GRADING NEAR AND WITHIN THE TREE CANOPIES. HAND GRADING IS REQUIRED.

## EARTHWORK CALCULATIONS:

(RAW DIRT ONLY:)

FILL VOL = 260 CY
CUT VOL = 1,005 CY

LONG = 745* CY
*TO BALANCE ON SITE GRADING MUST BE COMPACTED 90% MIN.

*QUANTITIES ARE FOR PERMIT FEE ESTABLISHMENT ONLY THE CONTRACTOR IS RESPONSIBLE FOR HIS OWN YARDAGE CALCULATIONS, FOR HIS OWN BID PURPOSE.

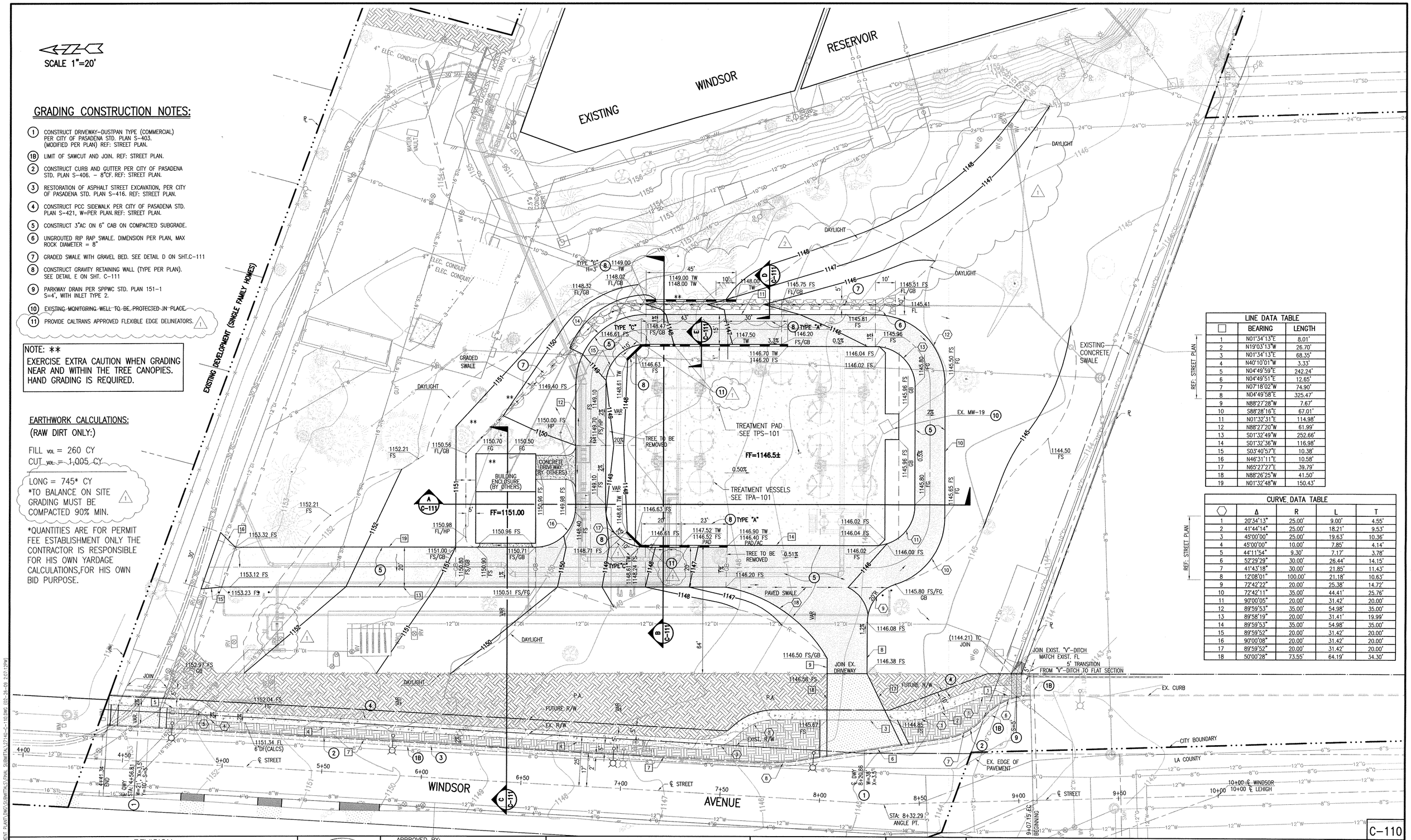


| LINE DATA TABLE | | |
|---|---|---|
| | BEARING | LENGTH |
| 1 | N01°34'13"E | 8.01' |
| 2 | N19°03'13"W | 26.70' |
| 3 | N01°34'13"E | 68.35' |
| 4 | N40°10'01"W | 3.33' |
| 5 | N04°49'59"E | 242.24' |
| 6 | N04°49'51"E | 12.65' |
| 7 | N07°18'02"W | 74.90' |
| 8 | N04°49'58"E | 325.47' |
| 9 | N88°27'28"W | 7.67' |
| 10 | S88°28'16"E | 67.01' |
| 11 | N01°32'31"E | 114.98' |
| 12 | N88°27'20"W | 61.99' |
| 13 | S01°32'49"W | 252.66' |
| 14 | S01°32'36"W | 116.98' |
| 15 | S03°40'57"E | 10.38' |
| 16 | N46°31'11"E | 10.58' |
| 17 | N65°27'27"E | 39.79' |
| 18 | N88°26'25"W | 41.50' |
| 19 | N01°32'48"W | 150.43' |

REF. STREET PLAN

| CURVE DATA TABLE | | | | |
|---|---|---|---|---|
| | Δ | R | L | T |
| 1 | 20°34'13" | 25.00' | 9.00' | 4.55' |
| 2 | 41°44'14" | 25.00' | 18.21' | 9.53' |
| 3 | 45°00'00" | 25.00' | 19.63' | 10.36' |
| 4 | 45°00'00" | 10.00' | 7.85' | 4.14' |
| 5 | 44°11'54" | 9.30' | 7.17' | 3.78' |
| 6 | 52°29'29" | 30.00' | 26.44' | 14.15' |
| 7 | 41°43'18" | 30.00' | 21.85' | 11.43' |
| 8 | 12°08'01" | 100.00' | 21.18' | 10.63' |
| 9 | 72°42'22" | 20.00' | 25.38' | 14.72' |
| 10 | 72°42'11" | 35.00' | 44.41' | 25.76' |
| 11 | 90°00'05" | 20.00' | 31.42' | 20.00' |
| 12 | 89°59'53" | 35.00' | 54.98' | 35.00' |
| 13 | 89°58'19" | 20.00' | 31.41' | 19.99' |
| 14 | 89°59'53" | 35.00' | 54.98' | 35.00' |
| 15 | 89°59'52" | 20.00' | 31.42' | 20.00' |
| 16 | 90°00'08" | 20.00' | 31.42' | 20.00' |
| 17 | 89°59'52" | 20.00' | 31.42' | 20.00' |
| 18 | 50°00'28" | 73.55' | 64.19' | 34.30' |

REF. STREET PLAN

C-110

| REVISION | | |
|---|---|---|
| NO. | DESCRIPTION | DATE |
| 1 | BUILDING DEPARTMENT PLAN CHECK COMMENTS | 01/05/09 |

REGISTERED PROFESSIONAL ENGINEER CHRISTOPHER SHEM HAWES 69578 CIVIL STATE OF CALIFORNIA 6/30/2010

APPROVED BY: CHRISTOPHER SHEM HAWES 69578 RCE 2/25/08 DATE
APPROVED: DATE
APPROVED: DATE

PLANS PREPARED BY:
CIVILTEC engineering inc.
*General Civil, Municipal, Water and Wastewater Engineering, Planning, Construction Management and Surveying*
118 West Lime Avenue
Monrovia, Ca. 91016
Phone: (626) 357-0588
Fax: (626) 303-7957

Battelle
*The Business of Innovation*

CITY OF PASADENA INCORPORATED JUNE 1886

D.S.-209 & 210A

| DATE | SCALE | PASADENA WATER & POWER CITY OF PASADENA | SHEET NO 14 OF 79 SHEETS |
|---|---|---|---|
| FEBRUARY 2009 | AS SHOWN | | |
| DRAWN BY CIVILTEC | | MONK HILL TREATMENT SYSTEM PRECISE GRADING PLAN | WORK ORDER 02557 / FILE NUMBER E-1670 |
| DESIGNED BY CIVILTEC | | | |
| CHECKED BY CIVILTEC | | | |
| SUBMITTED BY CIVILTEC | | | |
| FIELD BOOKS | CALC BOOKS | APPROVED / APPROVED | REVISION |

\\A2007\27140-PL MONHILL TREATMENT PLANT\WO\SUBMITTALS\FINAL SUBMITTAL\27140-C-110.DWG 02-25-09 2:07:12PM

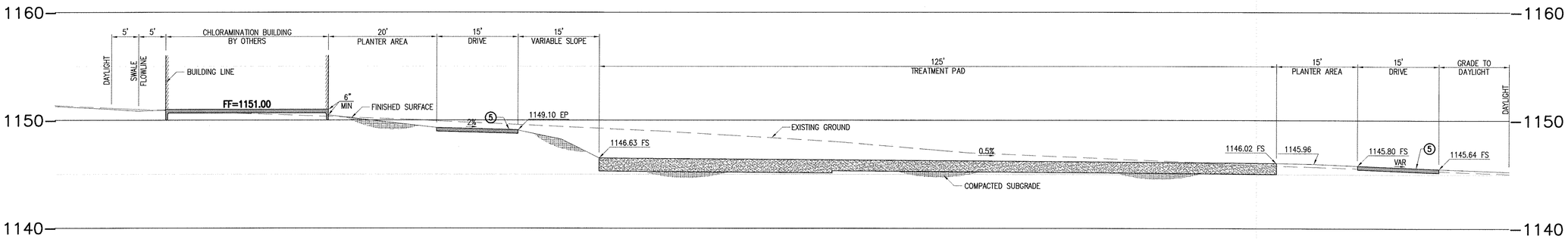


## TYPICAL SECTION A / C-110

SCALE: 1" = 10' HORIZONTAL
1" = 5' VERTICAL

## GRADING CONSTRUCTION NOTES:

- (1B) LIMIT OF SAWCUT AND JOIN.
- (2) CONSTRUCT CURB AND GUTTER PER CITY OF PASADENA STD. PLAN S-406. – 8"CF. REF. STREET PLANS.
- (3) RESTORATION OF ASPHALT STREET EXCAVATION, PER CITY OF PASADENA STD. PLAN S-416. REF. STREET PLANS.
- (4) CONSTRUCT PCC SIDEWALK PER CITY OF PASADENA STD. PLAN S-421, W=PER PLAN. REF. STREET PLANS.
- (5) CONSTRUCT 3"AC ON 6" CAB ON COMPACTED SUBGRADE.
- (6) UNGROUTED RIP RAP SWALE. DIMENSION PER PLAN, MAX ROCK DIAMETER = 8"
- (7) GRADED SWALE WITH GRAVEL BED. SEE DETAIL D ON SHT.C-111
- (8) CONSTRUCT GRAVITY RETAINING WALL (TYPE PER PLAN). SEE DETAIL B ON SHT. C-111
- (11) PROVIDE CALTRANS APPROVED FLEXIBLE EDGE DELINEATORS. (1)

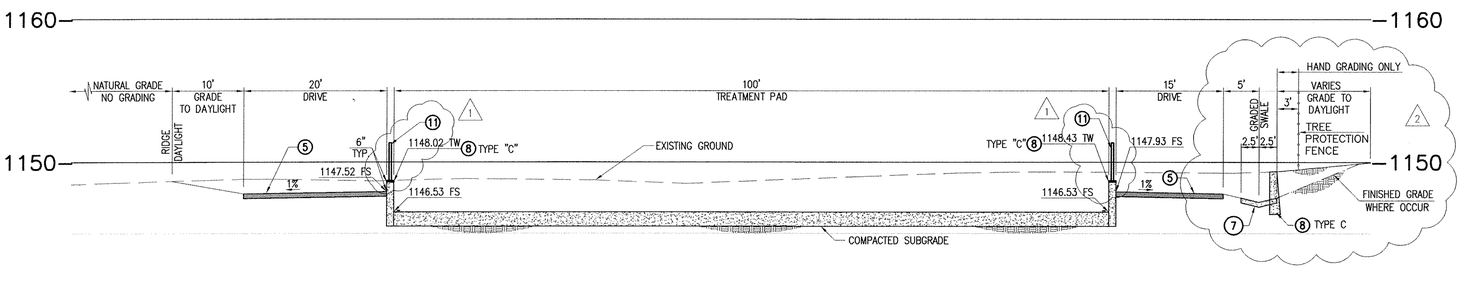


## TYPICAL SECTION B / C-110

SCALE: 1" = 10' HORIZONTAL
1" = 5' VERTICAL

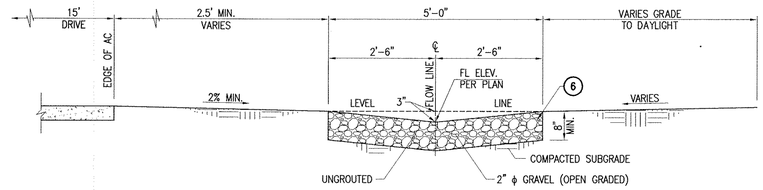


## GRADED SWALE SECTION D / C-110

NOT TO SCALE

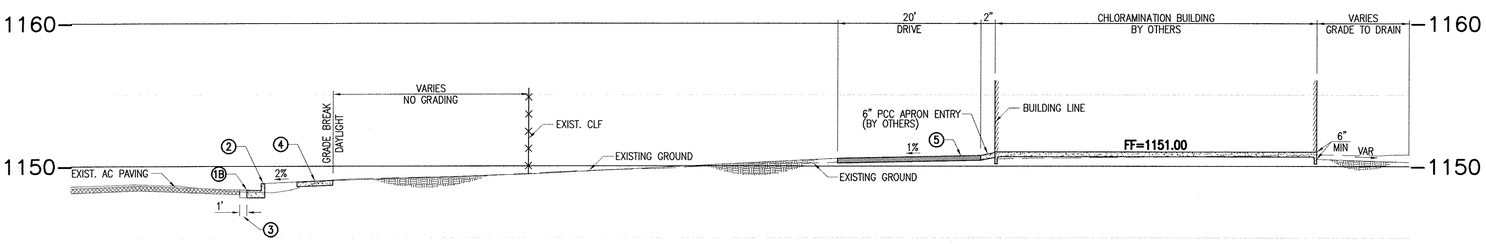


## TYPICAL SECTION C / C-110

SCALE: 1" = 10' HORIZONTAL
1" = 5' VERTICAL

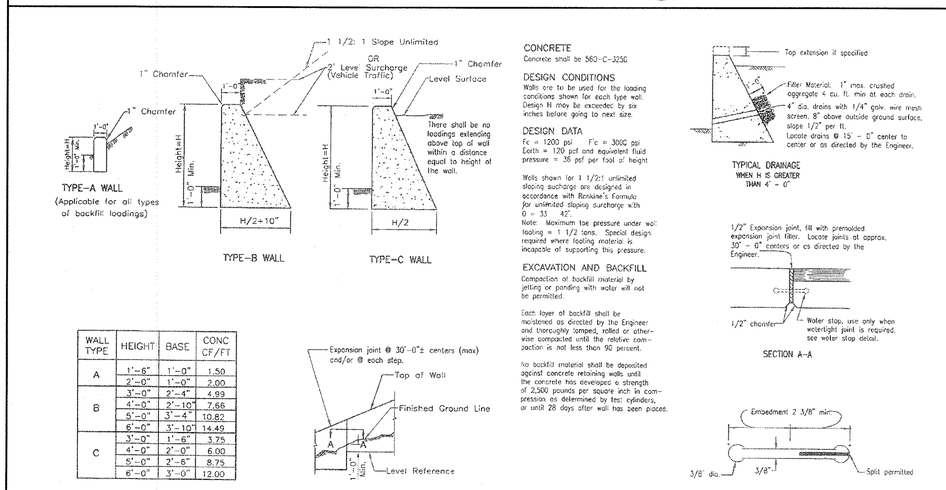


| WALL TYPE | HEIGHT | BASE | CONC CF/FT |
|---|---|---|---|
| A | 1'-8" | 1'-0" | 1.50 |
| | 2'-0" | 1'-0" | 2.00 |
| B | 3'-0" | 2'-4" | 4.99 |
| | 4'-0" | 2'-10" | 7.66 |
| | 5'-0" | 3'-4" | 10.82 |
| | 6'-0" | 3'-10" | 14.49 |
| C | 3'-0" | 1'-6" | 3.75 |
| | 4'-0" | 2'-0" | 6.00 |
| | 5'-0" | 2'-6" | 8.75 |
| | 6'-0" | 3'-0" | 12.00 |

### CONCRETE

Concrete shall be 560-C-3250

### DESIGN CONDITIONS

Walls are to be used for the loading conditions shown for each type wall. Design H may be exceeded by six inches before going to next size.

### DESIGN DATA

$f'c$ = 1200 psi  $f'c$ = 3000 psi
Earth = 120 pcf and equivalent fluid pressure = 35 psf per foot of height

Walls shown for 1 1/2:1 unlimited sloping surcharge are designed in accordance with Rankine's Formula for unlimited sloping surcharge with θ = 33° - 42°.
Note: Maximum toe pressure under wall loading = 1 1/2 tons. Special designs required where loading material is incapable of supporting this pressure.

### EXCAVATION AND BACKFILL

Compaction of backfill material by jetting or ponding with water will not be permitted.

Each layer of backfill shall be moistened as directed by the Engineer and thoroughly tamped, rolled or otherwise compacted until the relative compaction is not less than 90 percent.

No backfill material shall be deposited against concrete retaining walls until the concrete has developed a strength of 2,500 pounds per square inch in compression as determined by test cylinders, or until 28 days after wall has been placed.

## GRAVITY RETAINING WALL DETAIL E / C-110

NOT TO SCALE

C-111

| REVISION | | |
|---|---|---|
| NO. | DESCRIPTION | DATE |
| 1 | BUILDING DEPARTMENT PLAN CHECK COMMENTS | 01/05/09 |
| 2 | ADD GRAVITY WALL/TREE PROTECTION REQUIREMENTS | 02/24/09 |

REGISTERED PROFESSIONAL ENGINEER CHRISTOPHER SHEM HAWES 69578 CIVIL STATE OF CALIFORNIA

APPROVED BY: CHRISTOPHER SHEM HAWES RCE 69578 — DATE 2/25/08
APPROVED: — DATE
APPROVED: — DATE

PLANS PREPARED BY:
CIVILTEC engineering inc.
*General Civil, Municipal, Water and Wastewater Engineering, Planning, Construction Management and Surveying*
118 West Lime Avenue
Monrovia, Ca. 91016
Phone: (626) 357-0588
Fax: (626) 303-7957

Battelle
*The Business of Innovation*

CITY OF PASADENA INCORPORATED JUNE 1886

D.S.-209 & 210A

| | | | |
|---|---|---|---|
| DATE FEBRUARY 2009 | SCALE AS SHOWN | PASADENA WATER & POWER CITY OF PASADENA | SHEET NO 15 OF 79 SHEETS |
| DRAWN BY CIVILTEC | | MONK HILL TREATMENT SYSTEM PRECISE GRADING SECTIONS/DETAILS | WORK ORDER 02557 / FILE NUMBER E-1670 |
| DESIGNED BY CIVILTEC | | | |
| CHECKED BY CIVILTEC | | | |
| SUBMITTED BY CIVILTEC | | | |
| FIELD BOOKS | CALC BOOKS | APPROVED / APPROVED | REVISION |

X:\2007\27140-PL MONHILL TREATMENT PLANT\DWG\SUBMITTALS\FINAL SUBMITTAL\27140-C-111.DWG (02-26-09 2:07:51 PM)

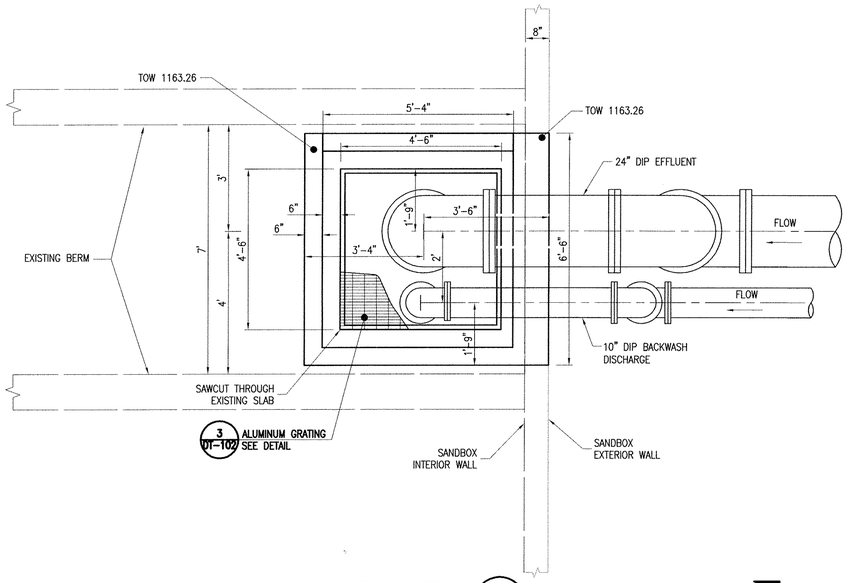


## PIPE PENETRATION DETAIL 1 C-112
SCALE: 1/2"=1'-0"

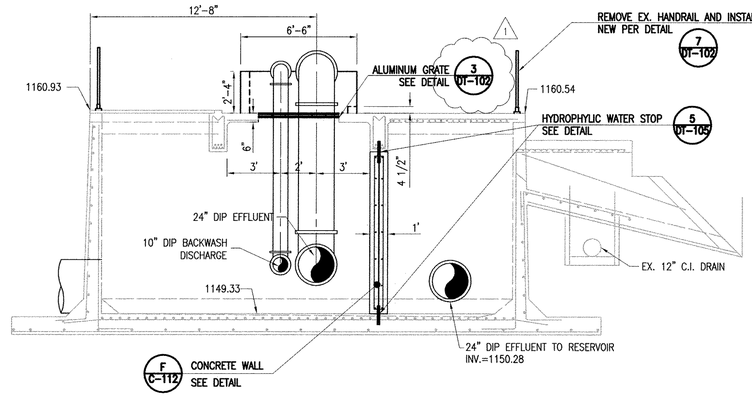


## SECTION A C-112
SCALE: 1/4"=1'-0"

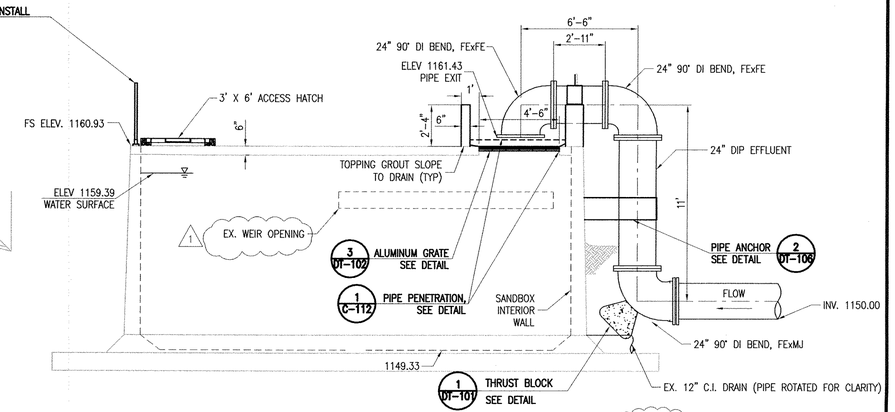


## SECTION B C-112
SCALE: 1/4"=1'-0"

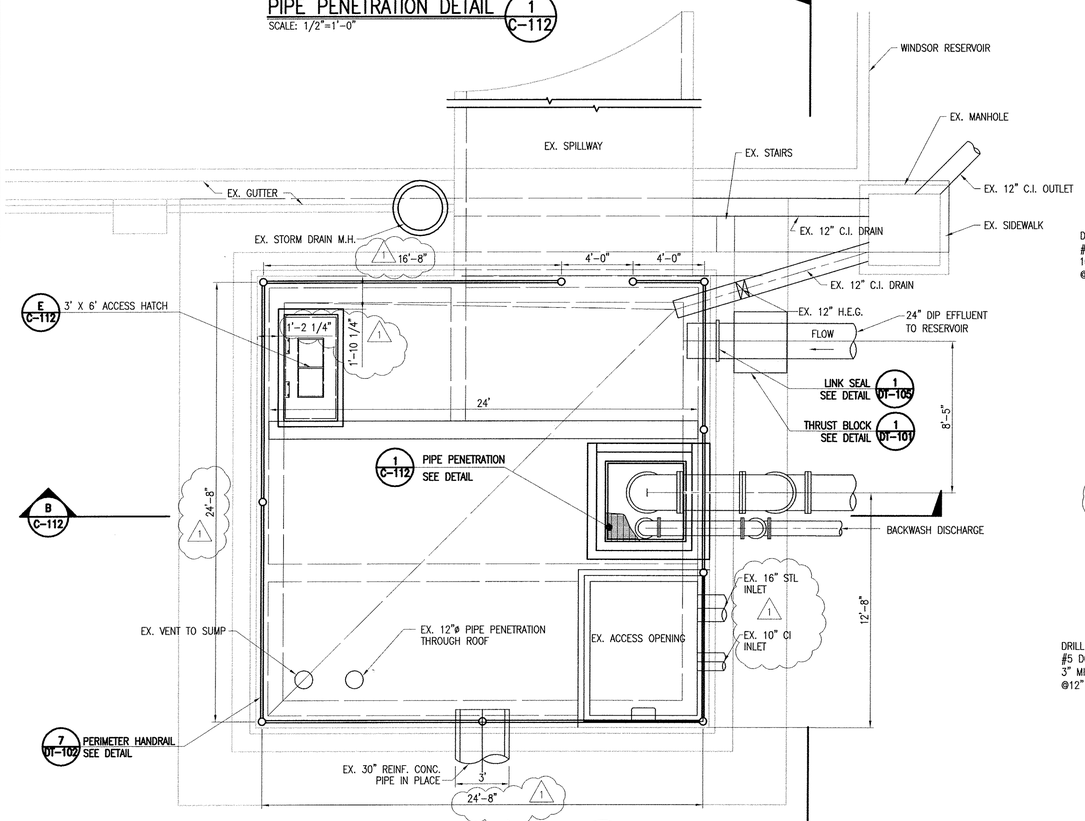


## SAND BOX PLAN 2 C-102
SCALE: 1/4"=1'-0"

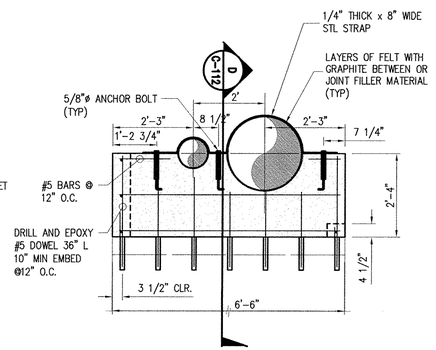


## SECTION C C-112
SCALE: 1/2"=1'-0"

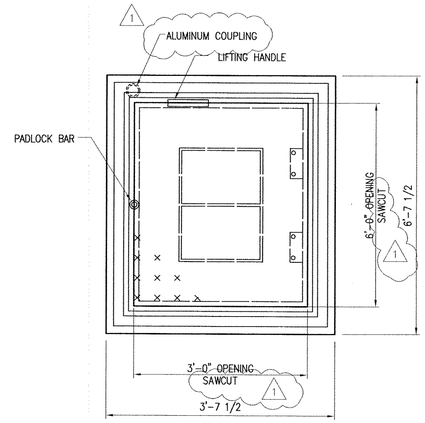


## PLAN
NOT TO SCALE

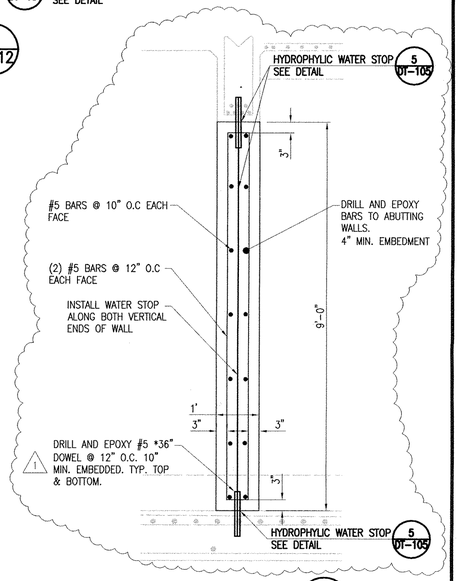


## CONCRETE WALL F C-112
SCALE: 1"=20'-0"

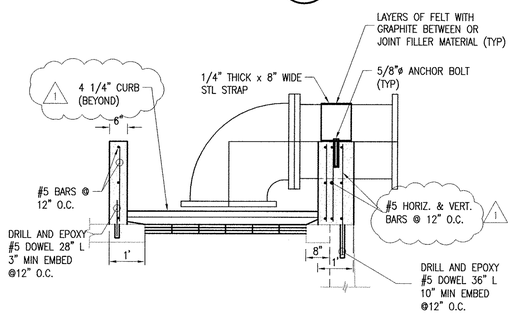


## SECTION D C-112
SCALE: 1/2"=1'-0"

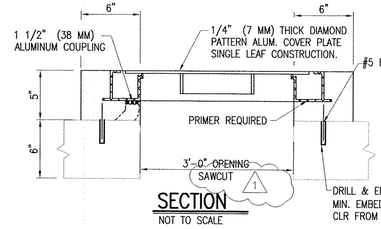


## SECTION
NOT TO SCALE

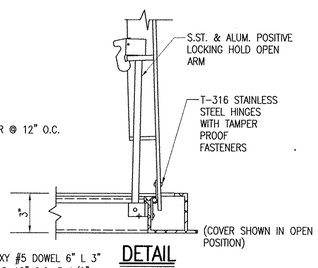


## DETAIL

## ACCESS HATCH E C-112
NOT TO SCALE

C-112

| REVISION | | |
|---|---|---|
| NO. | DESCRIPTION | DATE |
| 1 | BUILDING DEPARTMENT PLAN CHECK COMMENTS | 01/05/09 |

REGISTERED PROFESSIONAL ENGINEER CHRISTOPHER SHEM HAWES 69578 6/30/2010 CIVIL STATE OF CALIFORNIA

APPROVED BY: CHRISTOPHER SHEM HAWES RCE 69578 — DATE 2/25/08
APPROVED: — DATE
APPROVED: — DATE

PLANS PREPARED BY:
CIVILTEC engineering inc.
*General Civil, Municipal, Water and Wastewater Engineering, Planning, Construction Management and Surveying*
118 West Lime Avenue
Monrovia, Ca. 91016
Phone: (626) 357-0588
Fax: (626) 303-7957

Battelle
*The Business of Innovation*

CITY OF PASADENA INCORPORATED JUNE 1886

D.S.-209 & 210A

| | | |
|---|---|---|
| DATE FEBRUARY 2009 | SCALE AS SHOWN | PASADENA WATER & POWER CITY OF PASADENA |
| DRAWN BY CIVILTEC | | MONK HILL TREATMENT SYSTEM CIVIL DETAILS |
| DESIGNED BY CIVILTEC | | |
| CHECKED BY CIVILTEC | | |
| SUBMITTED BY CIVILTEC | | |
| FIELD BOOKS | CALC BOOKS | APPROVED / APPROVED |

SHEET NO 16 OF 79 SHEETS
WORK ORDER 02557
FILE NUMBER E-1670
REVISION

A:\02037-2214D-JR_MONKHILL TREATMENT PLANT\DWG\SUBMITTALS\FINAL SUBMITTAL\2714D-C-112.DWG (02-26-09 2:08:15PM)

# CITY OF PASADENA
## DEPARTMENT OF PUBLIC WORKS
# WINDSOR AVENUE IMPROVEMENTS
## FROM LEHIGH STREET TO 550 FEET NORTH

| SUBMITTED | APPROVED |
|---|---|
| | DANIEL A. RIX — DATE<br>CITY ENGINEER<br>REGISTERED CIVIL ENGINEER NO. C38689<br>REGISTRATION EXPIRES MARCH 31, 2009 |

## GRADING CONSTRUCTION NOTES:

1. CONSTRUCT 8" PCC CURB AND 2' GUTTER PCC PER CITY OF PASADENA STD. PLAN S-406.
4. CONSTRUCT 4" PCC SIDEWALK PER CITY OF PASADENA STD. PLAN S-421.
5. CONSTRUCT 8" THICK PCC DRIVEWAY-DUSTPAN TYPE (COMMERCIAL) PER CITY OF PASADENA STD. PLAN S-403. (MODIFIED PER PLAN)
6. CONSTRUCT PARKWAY DRAIN PER SPPWC STD. PLAN 151-1 S=4', WITH INLET TYPE 2.
7. CONSTRUCT 6" THICK (0.12' THICK C20PG 64-10 ON 0.38' THICK B-PG 64-10) ASPHALT CONCRETE PAVEMENT.
8. COLD PLANE EXISTING AC PAVEMENT TO A DEPTH OF 0.10-FOOT AND CONSTRUCT CLASS C2-AR-4000 AC SURFACE COURSE. EXACT LIMITS OF OVERLAY SUBJECT TO FIELD ADJUSTMENT BY THE ENGINEER.
9. CONSTRUCT 4" THICK CRUSHED AGGREGATE BASE.
10. AC STREET RESURFACING, REMOVAL AND RECONSTRUCTION AND COLD MILLING PER CITY OF PASADENA STANDARD PLAN S-415.
13. ADJUST WATER VALVE, SLEEVE, FRAME AND COVER TO GRADE.

## REMOVAL & DEMOLITION NOTES:

1. CONCRETE EXCAVATION
2. ROADWAY AND UNCLASSIFIED EXCAVATION
3. VEGETATION REMOVAL

8 — ABOVE THE LINE REFERS TO TYPE OF STANDARD OR THICKNESS OF SURFACE MATERIAL IN INCHES

## LEGEND AND ABBREVIATIONS:

- MANHOLE
- VALVE
- VAULT
- FIRE HYDRANT
- WATER METER
- GAS METER
- PULLBOX
- EXISTING MAST ARM LIGHT
- EXISTING TRAFFIC SIGNAL
- SIGNAL CONTROL BOX
- SIGN
- TREE
- PALM
- SPRINKLER HEAD
- FENCE
- SHRUB
- EXISTING POST TOP LIGHT
- R.R. CROSSING POST
- VENT
- 1151 — CONTOUR (ELEVATION IN FEET)

| | |
|---|---|
| A.C. | ASPHALTIC CONCRETE |
| B.W. | BACK OF WALK |
| C.B. | CATCH BASIN |
| C.F. | CURB FACE |
| C.L./℄ | CENTER LINE |
| C.L.F. | CHAIN LINK FENCE |
| E.P. | EDGE OF PAVEMENT |
| E.G. | EDGE OF GUTTER |
| EXIST. | EXISTING |
| F.F. | FINISHED FLOOR |
| F.G. | FINISHED GRADE |
| F.L. | FLOWLINE |
| F.S. | FINISHED SURFACE |
| G.B. | GRADE BREAK |
| H.P. | HIGH POINT |
| INV. | INVERT |
| L.P. | LOW POINT |
| P.A. | PLANTER AREA |
| P.C.C. | PORTLAND CEMENT CONCRETE |
| P.E. | PAD ELEVATION |
| R.C.P. | REINFORCED CONCRETE PIPE |
| R | RIDGELINE |
| S.D. | STORM DRAIN |
| S.M.H. | SEWER MANHOLE |
| S.S. | SANITARY SEWER |
| STD. | STANDARD |
| T.C. | TOP OF CURB |
| T.E. | TRASH ENCLOSURE |
| T.F. | TOP OF FOOTING |
| T.G. | TOP OF GRATE |
| T.M.H. | TOP OF MANHOLE |
| T.W. | TOP OF WALL |

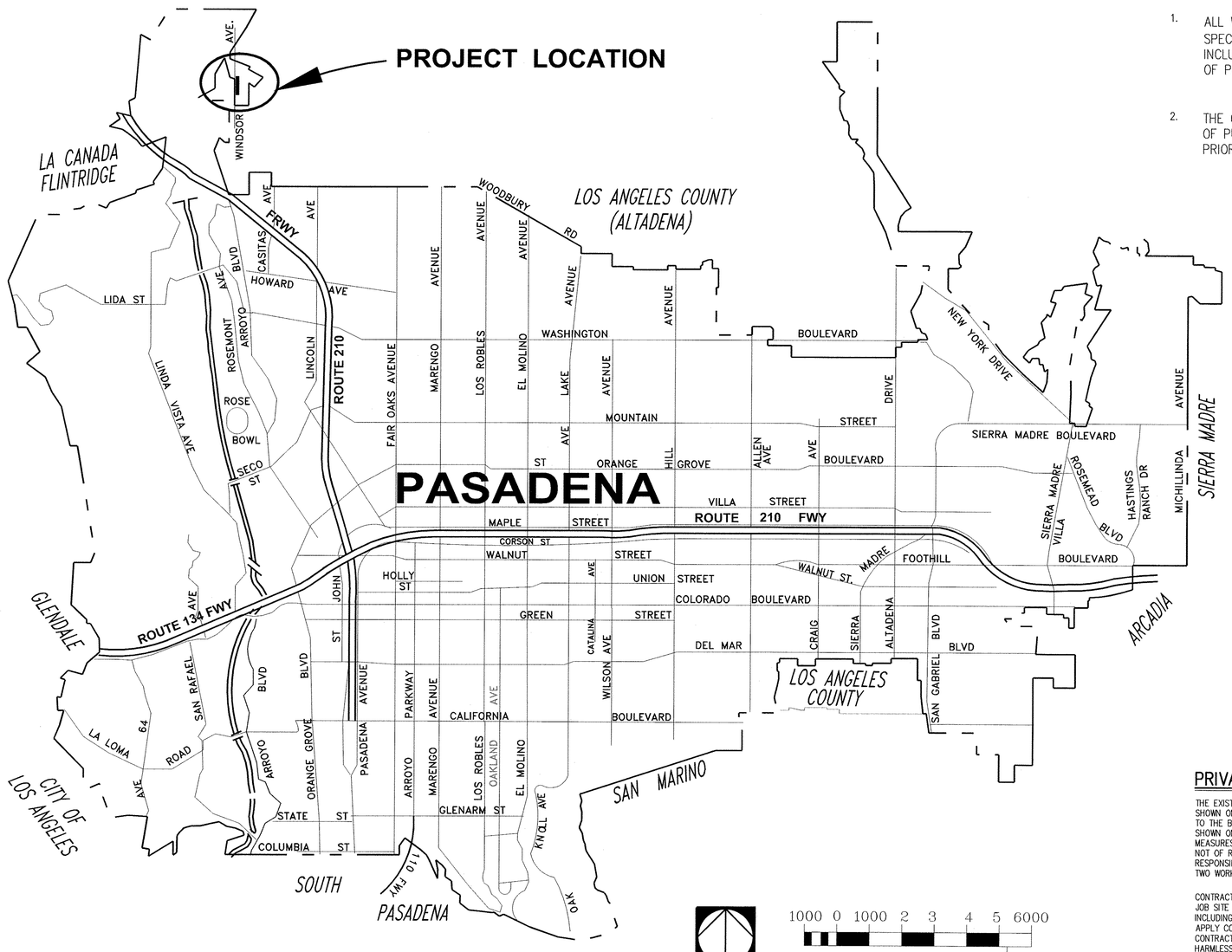


## INDEX OF SHEETS


| SHEET NO. | TITLE |
|---|---|
| 1 | TITLE SHEET |
| 2 | STREET PLAN AND PROFILE |
| 3 | STANDARD LEGEND AND GENERAL NOTES |
| 4 | STREET LIGHTING PLAN |
| 5 | CHANNELIZATION AND SIGNING PLAN |
| 6 | IRRIGATION PLAN |
| 7 | LANDSCAPING PLAN |
| 8 | IRRIGATION AND PLANTING DETAILS |


## GENERAL NOTES

1. ALL WORK TO BE DONE IN ACCORDANCE WITH THE " STANDARD SPECIFICATIONS FOR PUBLIC WORKS CONSTRUCTION," 2003 EDITION, INCLUDING ANY SUPPLEMENTS, THE LATEST EDITION OF THE CITY OF PASADENA SUPPLEMENTS AND MODIFICATIONS TO THE ABOVE.
2. THE CONTRACTOR SHALL OBTAIN A PERMIT FROM THE DEPARTMENT OF PUBLIC WORKS AT 100 NORTH GARFIELD AVENUE, ROOM N-140 PRIOR TO BEGINNING WORK.

## PRIVATE ENGINEER'S NOTICE TO CONTRACTOR

THE EXISTENCE AND LOCATION OF ANY UNDERGROUND UTILITY PIPES OR STRUCTURES SHOWN ON THESE PLANS ARE OBTAINED BY A SEARCH OF THE AVAILABLE RECORDS. TO THE BEST OF OUR KNOWLEDGE THERE ARE NO EXISTING UTILITIES EXCEPT AS SHOWN ON THESE PLANS. THE CONTRACTOR IS REQUIRED TO TAKE DUE PRECAUTIONARY MEASURES TO PROTECT THE UTILITY LINES SHOWN AND ANY OTHER LINES NOT OF RECORD OR NOT SHOWN ON THESE PLANS. THE CONTRACTOR SHALL BE RESPONSIBLE FOR NOTIFYING "UNDERGROUND SERVICE ALERT" AT 1-800-442-4133 TWO WORKING DAYS PRIOR TO ANY EXCAVATION OR CONSTRUCTION.

CONTRACTOR AGREES THAT HE SHALL ASSUME SOLE AND COMPLETE RESPONSIBILITY FOR JOB SITE CONDITIONS DURING THE COURSE OF CONSTRUCTION OF THIS PROJECT, INCLUDING SAFETY OF ALL PERSONS AND PROPERTY; THAT THIS REQUIREMENT SHALL APPLY CONTINUOUSLY AND NOT BE LIMITED TO NORMAL WORKING HOURS; AND THAT THE CONTRACTOR SHALL DEFEND, INDEMNIFY, AND HOLD THE CITY, AND THE ENGINEER HARMLESS FROM ANY AND ALL LIABILITY REAL OR ALLEGED, IN CONNECTION WITH THE PERFORMANCE OF WORK ON THIS PROJECT, EXCEPTING FOR LIABILITY ARISING FROM THE SOLE NEGLIGENCE OF THE CITY OR THE ENGINEER.

1000 0 1000 2 3 4 5 6000
ONE MILE
SCALE IN FEET

### IMPORTANT NOTICE

Section 4216/4217 of the Government Code requires a Dig Alert Identification Number be issued before a "Permit to Excavate" will be valid
For your Dig Alert I.D. Number Call Underground Service Alert
TOLL FREE-1-800-422-4133
Two working days before you dig.

REGISTERED PROFESSIONAL ENGINEER — CHRISTOPHER SHEM HAWES — 69578 — CIVIL — STATE OF CALIFORNIA — 08/30/2010

PLANS PREPARED BY: CIVILTEC engineering, inc. — General Civil, Municipal, Water and Wastewater Engineering, Planning, Construction Management and Surveying — 118 West Lime Avenue, Monrovia, Ca. 91016, Phone: (626) 357-0588, Fax: (626) 303-7957
CHRISTOPHER SHEM HAWES — DATE 08/30/10

DRAWN BY (PRIVATE)
DESIGNED BY (PRIVATE)
CHECKED BY JO

| REVISIONS | | | | | |
|---|---|---|---|---|---|
| MARK | DATE | DESCRIPTION | BY | CHKD. | APPROVED |
| | | AS BUILT | | | |

CITY OF PASADENA—DEPARTMENT OF PUBLIC WORKS

| | | | |
|---|---|---|---|
| PROJECT | WINDSOR AVENUE IMPROVEMENT | SHEET 1 OF 8 | |
| LIMITS | FROM LEHIGH STREET TO 550' NORTH | DWG. NO. | 5859 |
| SCALE | AS SHOWN | ACCOUNT NUMBER | 881000 |

X:\2007\27140-JR, MONWHILL TREATMENT PLANT\DWG\SUBMITTALS\COP JEP OF PUBLIC WORK PLAN\27140-SHT-01.DWG (03-02-09 8:46:57AM)

SUBMITTED

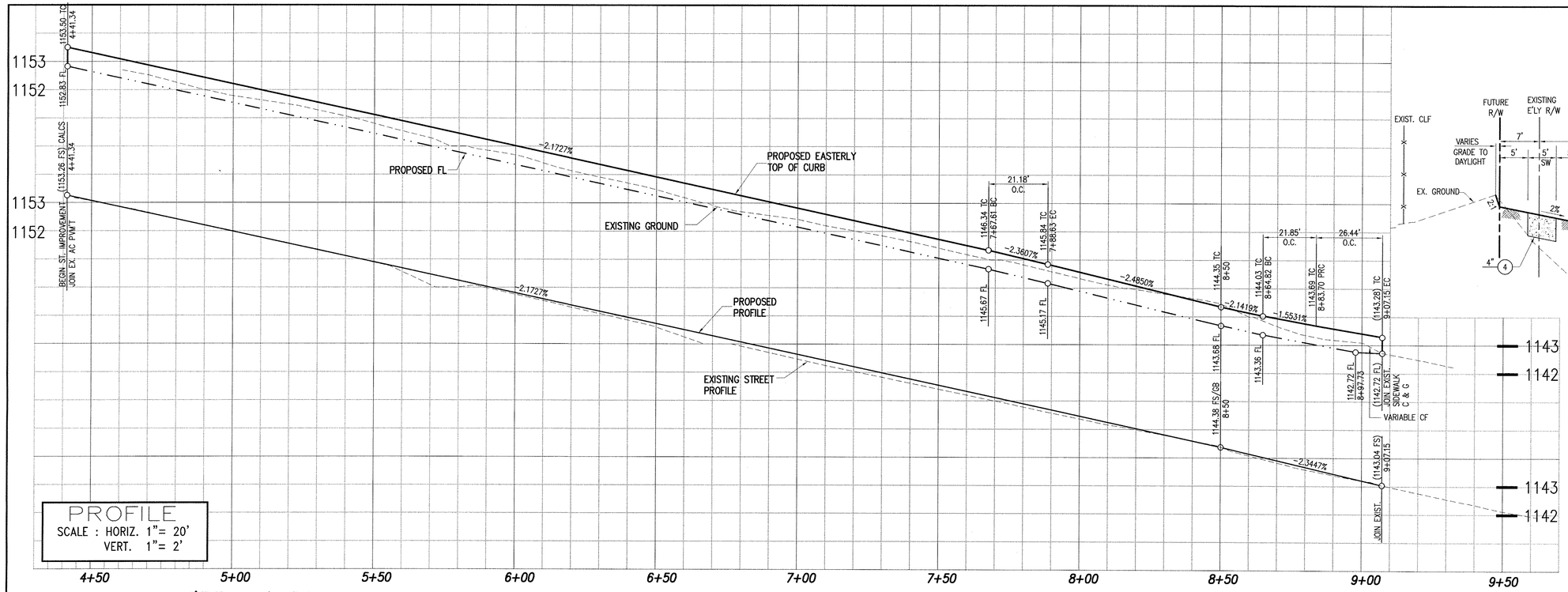


PROFILE
SCALE : HORIZ. 1"= 20'
VERT. 1"= 2'

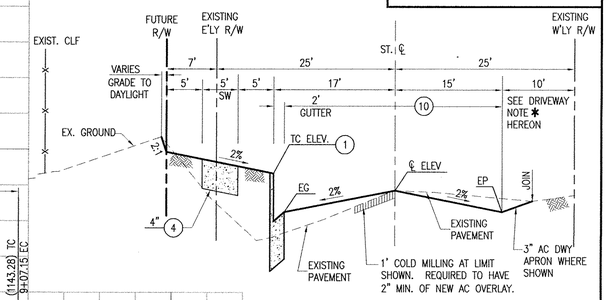


TYPICAL SECTION
NOT TO SCALE

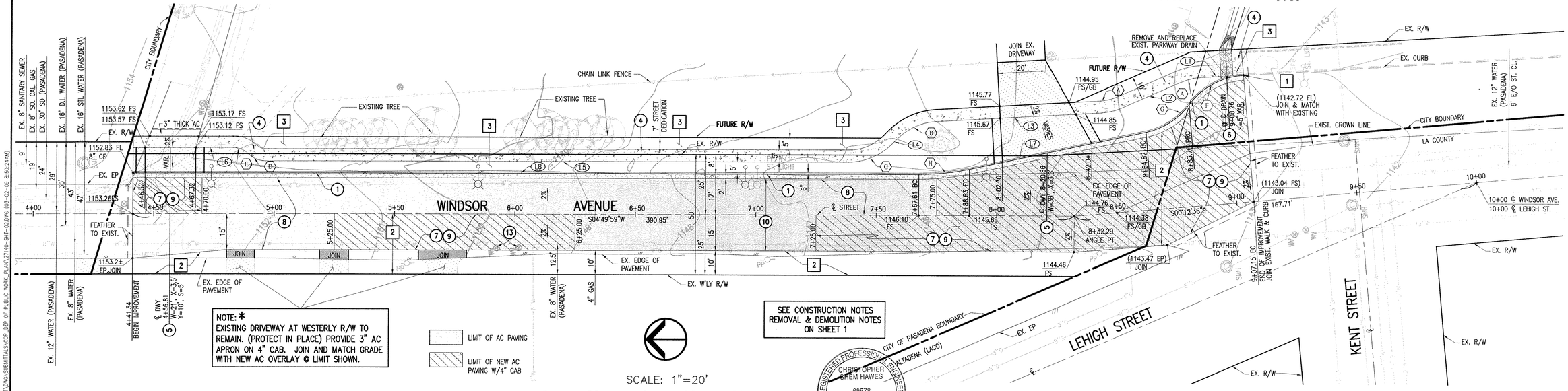


NOTE: *
EXISTING DRIVEWAY AT WESTERLY R/W TO REMAIN. (PROTECT IN PLACE) PROVIDE 3" AC APRON ON 4" CAB. JOIN AND MATCH GRADE WITH NEW AC OVERLAY @ LIMIT SHOWN.

LIMIT OF AC PAVING

LIMIT OF NEW AC PAVING W/4" CAB

SEE CONSTRUCTION NOTES REMOVAL & DEMOLITION NOTES ON SHEET 1

SCALE: 1"=20'

0 20 40 60 80 100
SCALE IN FEET

REGISTERED PROFESSIONAL ENGINEER CHRISTOPHER GREM HAWES 69578 6/30/2010 CIVIL STATE OF CALIFORNIA

| LINE TABLE | | | |
|---|---|---|---|
| | BEARING | LENGTH | REMARKS |
| L1 | N01°34'13"E | 8.01' | SIDEWALK |
| L2 | N19°03'13"W | 26.70' | SIDEWALK |
| L3 | N01°34'13"E | 68.35' | SIDEWALK |
| L4 | N40°10'01"W | 3.33' | SIDEWALK |
| L5 | N04°49'59"E | 242.24' | SIDEWALK |
| L6 | N04°49'51"E | 12.65' | SIDEWALK |
| L7 | N07°18'02"W | 74.90' | CURB |
| L8 | N04°49'58"E | 325.47' | CURB |

| CURVE TABLE | | | | | |
|---|---|---|---|---|---|
| | Δ | RADIUS | LENGTH | TANGENT | REMARKS |
| A | 20°34'13" | 25.00' | 9.00' | 4.55' | SIDEWALK |
| B | 41°44'14" | 25.00' | 18.21' | 9.53' | SIDEWALK |
| C | 45°00'00" | 25.00' | 19.63' | 10.36' | SIDEWALK |
| D | 45°00'00" | 10.00' | 7.85' | 4.14' | SIDEWALK |
| E | 44°11'54" | 9.30' | 7.17' | 3.78' | SIDEWALK |
| F | 50°29'29" | 30.00' | 26.44' | 14.15' | CURB |
| G | 41°43'18" | 30.00' | 21.85' | 11.43' | CURB |
| H | 12°08'01" | 100.00' | 21.18' | 10.63' | CURB |

BENCH MARKS
L&BR IN E CB WINDSOR AVE. (14.5M) 47.572' E/O C/L PROD KENT
ELEV. (348.183M) 1142.329 FEET BM NUMBER Y 11250
LACO DPW TAG IN N CB KENT ST (400M) 1312.336' W/O BCR (6M) 19.685' N/O C/L & (22M) 72.178' W/O C/L WINDSOR AVE.
ELEV. (348.139M) 1142.185 FEET BM NUMBER Y 11251

PROJECT ENGINEER
C. Greg Hawes
DATE 2/25/2007
FIELD BOOK NO. NONE

DRAWN BY (PRIVATE)
DESIGNED BY (PRIVATE)
CHECKED BY JO

REVISIONS

| MARK | DATE | DESCRIPTION | BY | CHKD. | APPROVED |
|---|---|---|---|---|---|
| | | | KHR | | |
| | | AS BUILT | | | |

# STREET PLAN AND PROFILE

CITY OF PASADENA–DEPARTMENT OF PUBLIC WORKS

PROJECT **WINDSOR AVENUE IMPROVEMENTS**
LIMITS FROM LEHIGH STREET TO 550' NORTH
SCALE AS SHOWN
ACCOUNT NUMBER 881000
SHEET 2 OF 8
DWG. NO. 5859

X:\2007\27140-PL MONROVIA TREATMENT PLANT\DWG\SUBMITTALS\CGP DEP OF PUBLIC WORK PLAN\27140-SHT-02.DWG (03-02-09 8:50:24AM)

SUBMITTED

# STANDARD LEGEND & GENERAL NOTES
## FOR
# TRAFFIC SIGNAL & STREET LIGHT DRAWINGS

## Legend: (UNLESS OTHERWISE SPECIFIED)

| PROPOSED | EXISTING | |
|---|---|---|
| | | EXISTING 3-SECTION TRAFFIC SIGNAL HEAD WITHOUT BACKPLATE. 8" RED, YELLOW, GREEN. |
| | | 3-SECTION TRAFFIC SIGNAL HEAD WITH BACKPLATE. 8" RED, YELLOW, GREEN. |
| | | 3-SECTION TRAFFIC SIGNAL HEAD WITH BACKPLATE ON TRAFFIC SIGNAL MAST ARM. 12" RED, YELLOW, GREEN. |
| | | 3-SECTION TRAFFIC SIGNAL HEAD WITH BACKPLATE. 12" RED, YELLOW, AND GREEN DIRECTIONAL ARROW. |
| | | 4-SECTION TRAFFIC SIGNAL HEAD WITH BACKPLATE. 8" RED, YELLOW, GREEN. 12" GREEN DIRECTIONAL ARROW. |
| | | 4-SECTION TRAFFIC SIGNAL HEAD WITH BACKPLATE ON TRAFFIC SIGNAL MAST ARM. 12" RED, YELLOW, GREEN. 12" GREEN DIRECTIONAL ARROW. |
| | | 5-SECTION TRAFFIC SIGNAL HEAD WITH BACKPLATE. 8" RED, YELLOW, GREEN. 12" YELLOW AND GREEN DIRECTIONAL ARROWS. |
| | | 5-SECTION TRAFFIC SIGNAL HEAD WITH BACKPLATE ON TRAFFIC SIGNAL MAST ARM. 12" RED, YELLOW, GREEN. 12" YELLOW AND GREEN DIRECTIONAL ARROWS. |
| | | TRAFFIC SIGNAL CONTROLLER. DOOR SWINGS AS SHOWN. |
| | | "INTERNATIONAL DISPLAY" PEDESTRIAN SIGNAL. (EXISTING"WALK-DON'T WALK" PEDESTRIAN SIGNAL.) |
| PPB | ppb | PEDESTRIAN PUSH BUTTON ON POST OR STANDARD AS INDICATED OR NOTED. |
| XXXX | XXXX | 6' DIAMETER INDUCTIVE LOOP DETECTOR UNLESS OTHERWISE SHOWN ON PLANS. (xxxx REFERS TO LOOP DETECTOR AMPLIFIER). |
| TS SL | TS SL | NO. 2 TRAFFIC SIGNAL/STREET LIGHT PULL BOX PER CITY OF PASADENA PUBLIC WORKS DEPARTMENT STANDARD DRAWING S-973. |
| | | TRAFFIC SIGNAL CONDUIT. |
| | | STREET LIGHT CONDUIT. |
| ELECTROLIER STD. DWG. \| MOUNTING HEIGHT \| LUMINAIRE<br>STATION | ( ) | ELECTROLIER INFORMATION. |
| | | ELECTROLIER, POST TOP TYPE. |
| | | ELECTROLIER, POST TOP TYPE WITH DOUBLE MAST ARM & LUMINAIRE. |
| | | ELECTROLIER, MAST ARM TYPE WITH HORIZONTAL BURNING LUMINAIRE (STD. DWG. S-950). |
| | | ELECTROLIER, MAST ARM TYPE WITH HORIZONTAL BURNING LUMINAIRE (STD. DWG. S-951). |
| | | LUMINAIRE WITH MAST ARM ON EXISTING POLE. |
| | | VIDEO DETECTION CAMERA |
| | | CLOSED CIRCUIT TELEVISION CAMERA (CCTV) |
| | | RADIO FREQUENCY ANTENNA |
| | | EMERGENCY PRE-EMPTION DEVICE |

## Notes: (UNLESS OTHERWISE SPECIFIED)

1. ALL TRAFFIC SIGNAL WORK SHALL CONFORM TO THIS PLAN AND THE LATEST SPECIFICATIONS AND STANDARD PLANS OF THE STATE OF CALIFORNIA, BUSINESS AND TRANSPORTATION AGENCY, DEPARTMENT OF TRANSPORTATION.
2. LOCATE ALL TRAFFIC SIGNAL AND STREET LIGHT STANDARDS PER CITY OF PASADENA PUBLIC WORKS DEPARTMENT STANDARD DRAWING S-970.
3. TRAFFIC SIGNAL AND STREET LIGHT PULL BOXES SHALL NOT BE INSTALLED WITHIN DRIVEWAY APPROACHES OR SIDEWALK AREAS DESIGNATED AS WHEELCHAIR RAMPS.
4. CONDUIT MINIMUM COVER SHALL BE IN ACCORDANCE WITH SECTION 307-2.5 OF THE STANDARD SPECIFICATIONS FOR PUBLIC WORKS CONSTRUCTION. ALL CONDUIT RUNS IN STREET AND FEED RUNS SHALL BE 2" GALVANIZED STEEL. ALL OTHER CONDUIT SHALL BE $1\frac{1}{2}$" UNLESS OTHERWISE NOTED.
5. N.I.C. = NOT IN CONTRACT.
6. CONTRACTOR SHALL SALVAGE ALL SIGNS FROM EXISTING TRAFFIC SIGNAL AND STREET LIGHT STANDARDS BEING REMOVED, OR SALVAGED.
7. CONTRACTOR SHALL REMOVE FOUNDATIONS OF TRAFFIC SIGNAL OR STREET LIGHT EQUIPMENT TO BE REMOVED, RELOCATED, OR SALVAGED.
8. FOR STREET LIGHT CIRCUIT DIAGRAMS NOT SHOWN ON THE PLANS, SEE CITY OF PASADENA PUBLIC WORKS DEPARTMENT STANDARD S-971 AND S-975, IF APPLICABLE.
9. CONTRACTOR TO NOTIFY PUBLIC WORKS STREET LIGHT SUPERVISOR (626-744-4158), 72 HOURS PRIOR TO ANY WORK ON EXISTING STREET STREET LIGHT SYSTEMS.
10. POWER FEED POINTS FOR TRAFFIC SIGNALS AND STREET LIGHTS:
    A. ALL WORK AND CONNECTIONS IN THE DEPARTMENT OF WATER AND POWER UNDERGROUND DISTRIBUTION VAULTS SHALL BE DONE BY CITY FORCES. (NOTIFY 626-744-4467 48 HOURS IN ADVANCE.)
    B. WHERE FEED POINTS ARE FROM POWER POLES, THE CONTRACTOR SHALL TURN FEED CONDUIT UP BASE OF POWER POLE A MINIMUM OF TEN FEET, AS DIRECTED BY THE ENGINEER, AND SHALL FURNISHED THE REQUIRED CONDUCTORS TO THE CITY FEED POINT OF CONNECTION ON THE POLE. THE CITY WILL FURNISH AND INSTALL THE REMAINING CONDUIT RISER ON THE POLE AND CONNECT THE CONDUCTORS TO THE FEED POINT.
11. ALL FEED POINT CONNECTIONS, CIRCUIT CUTS AND CLOSURES ON POWER POLES OR IN VAULTS SHALL BE DONE BY THE CITY AT NO EXPENSE TO THE CONTRACTOR.
12. BEFORE BEGINNING EXCAVATIONS NEAR POWER POLES, THE CONTRACTOR SHALL NOTIFY THE POWER DIVISION (626-744-4467) AT LEAST FIVE (5) WORKING DAYS IN ADVANCE SO THAT CITY FORCES CAN PROVIDE ADDITIONAL POLE SUPPORT IF NECESSARY. (THIS WORK WILL BE DONE AT NO EXPENSE TO THE CONTRACTOR.)
13. ALL MOUNTING FRAMEWORK FOR NEW OR RELOCATED TRAFFIC SIGNAL EQUIPMENT SHALL BE INSTALLED PER STANDARD DRAWING S-962. FRAMEWORK SHALL BE MODIFIED AS NECESSARY OR INSTALLED NEW. PLUG UNUSED OPENINGS.
14. THESE DRAWINGS SHOW NO DEPTHS AND ONLY APPROXIMATE LOCATIONS OF EXISTING TRAFFIC SIGNAL AND STREET LIGHTING CONDUITS. CAUTION AND DUE CARE MUST BE EXERCISED DURING ALL EXCAVATIONS TO AVOID THESE FACILITIES. PROPOSED TRAFFIC SIGNAL AND STREET LIGHT CONDUITS AND PULL BOX LOCATIONS ARE SHOWN SCHEMATICALLY ONLY.
15. THE MINIMUM CLEARANCE BETWEEN AN OPEN TRENCH AND A STREET TREE SHALL BE ONE (1) FOOT OR SIX (6) INCHES FOR EACH INCH OF TRUNK DIAMETER MEASURED AT 4.5 FEET ABOVE EXISTING GRADE IF THIS METHOD DEFINES A LARGER DISTANCE. THE MAXIMUM CLEARANCE SHALL BE TEN (10) FEET.

    THE CONTRACTOR SHALL CONFORM TO THESE PROVISIONS UNLESS OTHERWISE DIRECTED BY THE ENGINEER.
16. CONTRACTOR SHALL PAINT ALL EXISTING AND RELOCATED TRAFFIC SIGNAL/STREET LIGHT STANDARDS AND TRAFFIC SIGNAL EQUIPMENT. SEE PROJECT SPECIFICATIONS FOR DETAILS.
17. EXCEPT AT SIGNALIZED INTERSECTIONS, ALL EXISTING STREET LIGHT CONDUCTORS AND FUSES SHALL BE REPLACED WITH NEW CONDUCTORS AND FUSES. SEE PROJECT SPECIFICATIONS FOR DETAILS.

| | |
|---|---|
| AB | ABANDON. IF APPLIED TO CONDUIT, REMOVE CONDUCTORS. |
| BC | INSTALL PULL BOX IN EXISTING CONDUIT RUN. |
| CB | INSTALL CONDUIT INTO EXISTING PULL BOX. |
| CC | CONNECT NEW AND EXISTING CONDUIT. REMOVE EXISTING CONDUCTORS AND INSTALL CONDUCTORS AS INDICATED. |
| CF | CONDUIT TO REMAIN FOR FUTURE USE. REMOVE CONDUCTORS. INSTALL PULL WIRE OR ROPE. |
| MF | MODIFY FOUNDATION TO CLEAR UNDERGROUND UTILITY AS DIRECTED BY THE ENGINEER. |
| RB | REMOVE AND REPLACE PULL BOX. INSTALL CONDUIT INTO NEW PULL BOX. |
| RC | EQUIPMENT TO BE REMOVED AND BECOME PROPERTY OF THE CONTRACTOR. |
| RR | REMOVE AND REUSE EQUIPMENT. |
| RT | REMOVE TREE AND STUMP. |
| RS | REMOVE AND SALVAGE EQUIPMENT. |
| RP | REMOVE AND RELOCATE PALM TREE. |
| SC | SPLICE NEW TO EXISTING CONDUCTORS. |
| TT | TRIM TREE (BY OTHERS). |
| CO | INSTALL CONDUIT ONLY. |
| PM | MODIFY PEDESTRIAN SIGNAL HEAD TO INTERNATIONAL SYMBOL. |

## LEGEND:

CONCRETE STANDARD – CONCRETE STANDARD SHALL CONFORM TO PASADENA STANDARD PLAN No. S-923.

LUMINAIRES – 100 WATT HPS LUMINAIRES SHALL CONFORM TO PASADENA STANDARD PLAN No. S-950.

FOUNDATION – THE ELECTROLIER FOUNDATION SHALL CONFORM TO PASADENA STANDARD PLAN No. S-972 SHEETS 1 AND 2.

STREET LIGHT LOCATION – THE PROPOSED STREET LIGHT LOCATION SHALL CONFORM TO PASADENA STANDARD PLAN No. S-970.

FUSE CONNECTORS – FUSE CONNECTOR FOR 5 TO 30 AMPERE CARTRIDGE TYPE FUSES SHALL BE TRON STYLE HEB OR APPROVED EQUAL. FUSE CONNECTORS FOR 35 TO 60 AMPERE CARTRIDGE TYPE SHALL BE TRON STYLE HEJ OR APPROVED EQUAL.

BONDING AND GROUNDING – BONDING AND GROUNDING SHALL CONFORM TO PASADENA STANDARD PLAN No. S-906.

REGISTERED PROFESSIONAL ENGINEER CHRISTOPHER SHEM HAWES 69578 06/30/2010 CIVIL STATE OF CALIFORNIA


PLANS PREPARED BY: CIVILTEC engineering inc.
CHRISTOPHER SHEM HAWES DATE 06/30/10
General Civil, Municipal, Water and Wastewater Engineering, Planning, Construction Management and Surveying
118 West Lime Avenue
Monrovia, Ca. 91016
Phone: (626) 357-0588
Fax: (626) 303-7957


DRAWN BY (PRIVATE)
DESIGNED BY (PRIVATE)
CHECKED BY JO

REVISIONS

| MARK | DATE | DESCRIPTION | BY | CHKD. | APPROVED |
|---|---|---|---|---|---|
| | | AS BUILT | | | |

CITY OF PASADENA – DEPARTMENT OF PUBLIC WORKS

STANDARD LEGEND AND GENERAL NOTES

PROJECT WINDSOR AVENUE IMPROVEMENTS

SHEET 3 OF 8

DWG. NO. 5859

A:\2007\27140-JPL MONROVIA TREATMENT PLANT\DWG\SUBMITTALS\CDP DEP OF PUBLIC WORK PLAN\27140-SHT-03.DWG (03-02-09 9:30:09AM)

SUBMITTED

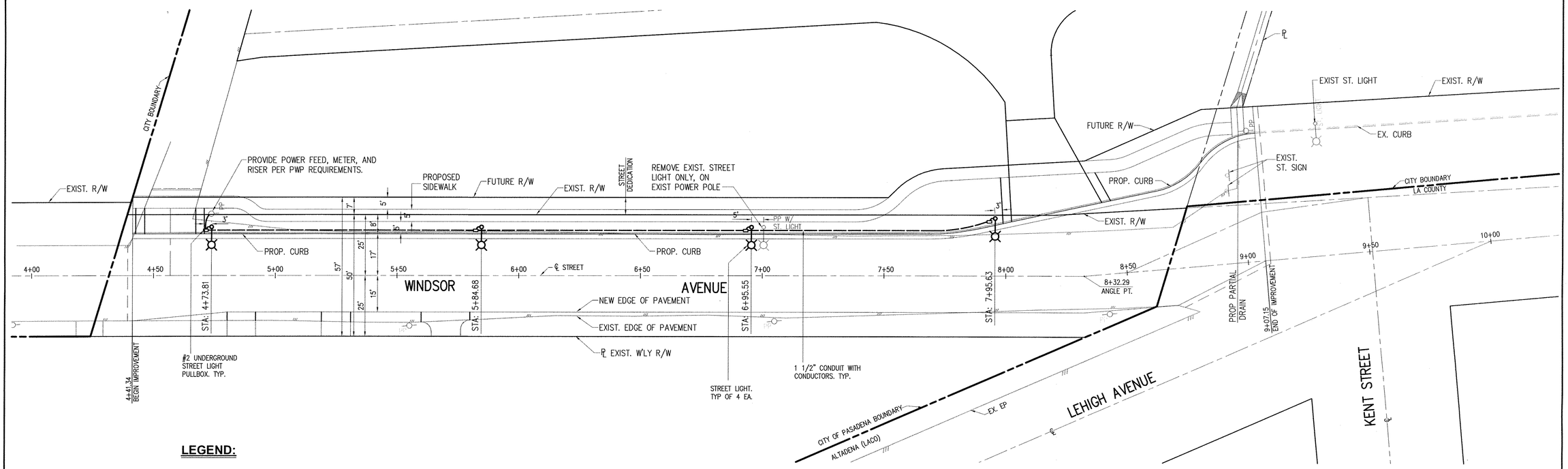


## LEGEND:

NO.2 STREET LIGHT PULL BOX PER CITY OF PASADENA PUBLIC WORKS DEPARTMENT STANDARD DRAWING S-904.

NEW HIGHMAST STREET LIGHT. PROVIDE PUMCO 1023K CONCRETE MARBELITE STD. W/ 100WATT HIGH PRESSURE SODIUM 120 V.H.B. LUMINAIRE.

## CONSTRUCTION NOTES

1. SET ALL STREET LIGHT STANDARDS (UNLESS OTHERWISE NOTED):
   A. 2'-6" BACK OF CURB FACE.
   B. 2'-0" INSIDE B.C.R. (BEGINING OF CURB RETURN).
   C. MINIMUM 5'-0" CLEAR OF TOP OF DRIVEWAY "X".
2. CONDUIT MINIMUM COVER SHALL BE 15" IN PARKWAY AND 30" IN STREET BEGINNING AT GUTTER FLOW LINE.
3. CONTRACTOR SHALL VERIFY ALL LENGTHS OF CONDUIT, CONDUCTORS, AND CABLE TO BE INSTALLED AT THE JOB SITE.
4. CONTRACTOR TO VERIFY THE NUMBER OF CONDUCTORS IN EACH CONDUIT RUN.
5. POWER FEED POINT FOR THE STREET LIGHTS:
   ALL WORK AND CONNECTIONS IN THE DEPARTMENT OF WATER AND POWER UNDERGROUND DISTRIBUTION VAULTS SHALL BE DONE CITY FORCES.
   (NOTIFY 577-4476, 48 HOURS IN ADVANCE)
6. STREET LIGHT PULLBOX SHALL NOT BE INSTALLED WITHIN DRIVEWAY APPROACHES OR SIDEWALK AREAS DESIGNATED AS WHEELCHAIR RAMPS.
7. CONTRACTOR TO NOTIFY PUBLIC WORK STREET LIGHT SUPERVISOR AT 577-4148 72 HOURS PRIOR TO ANY WORK ON EXISTING STREET LIGHT SYSTEMS.
8. UNDERGROUND VAULTS TO BE INSTALLED BY OTHERS.
9. ALL WORK INCLUDING RESTORATION OF EXISTING IMPROVEMENTS SHALL BE IN ACCORDANCE WITH THE LATEST EDITION OF THE "STANDARD SPECIFICATION FOR PUBLIC WORKS CONSTRUCTION" INCLUDING SUPPLEMENTS, AND THE SPECIFICATIONS FOR THE "INSTALLATION AND MODIFICATION OF STREET LIGHTING AND TRAFFIC SIGNALS IN THE CITY OF PASADENA, CALIFORNIA", AVAILABLE IN DEPARTMENT OF PUBLIC WORKS, ROOM 215, CITY HALL.

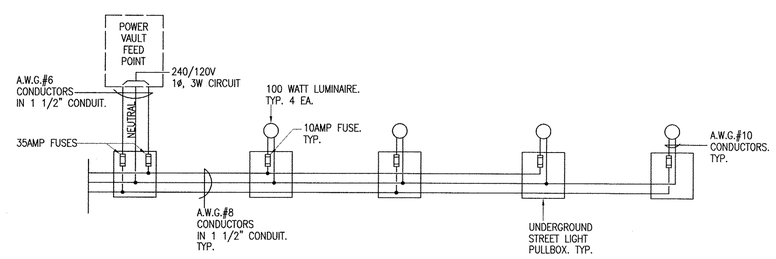


**STREET LIGHT CIRCUIT DIAGRAM**

120VOLT MULTIPLE CIRCUITS, NO SCALE

SCALE: 1"=20'

0 20 40 60 80 100

SCALE IN FEET

AVERAGE MAINTAINED ILLUMINATION (ULT.) = 0.44 F.C.

**STREET LIGHTING**

REGISTERED PROFESSIONAL ENGINEER CHRISTOPHER SHEM HAWES 69578 6/30/2010 CIVIL STATE OF CALIFORNIA

PLANS PREPARED BY: CIVILTEC engineering inc. — General Civil, Municipal, Water and Wastewater Engineering, Planning, Construction Management and Surveying. 118 West Lime Avenue, Monrovia, Ca. 91016, Phone: (626) 357-0588, Fax: (626) 303-7957. CHRISTOPHER SHEM HAWES DATE 06/30/10

WATER AND POWER DEPARTMENT — DATE

FIELD BOOK NO. NONE

PROJECT ENGINEER — DATE

TRANSPORTATION ADMINISTRATOR — DATE

DRAWN BY (PRIVATE)
DESIGNED BY (PRIVATE)
CHECKED BY JIM VALENTINE

REVISIONS

| MARK | DATE | DESCRIPTION | BY | CHKD. | APPROVED |
|---|---|---|---|---|---|
| | | AS BUILT | | | |

CITY OF PASADENA – DEPARTMENT OF PUBLIC WORKS

PROJECT: WINDSOR AVENUE IMPROVEMENT
LIMITS: FROM LEHIGH STREET TO 550' NORTH
SCALE: 1" = 20'
ACCOUNT NUMBER: 881000
SHEET 4 OF 8
DWG. NO. 5859

X:\2007\27140-JPL MONWELL TREATMENT PLANT\DWG\SUBMITTALS\CDP-REP OF PUBLIC WORK_PLAN\27140-SHT-04.DWG (03-02-09 9:07:37AM)

SUBMITTED

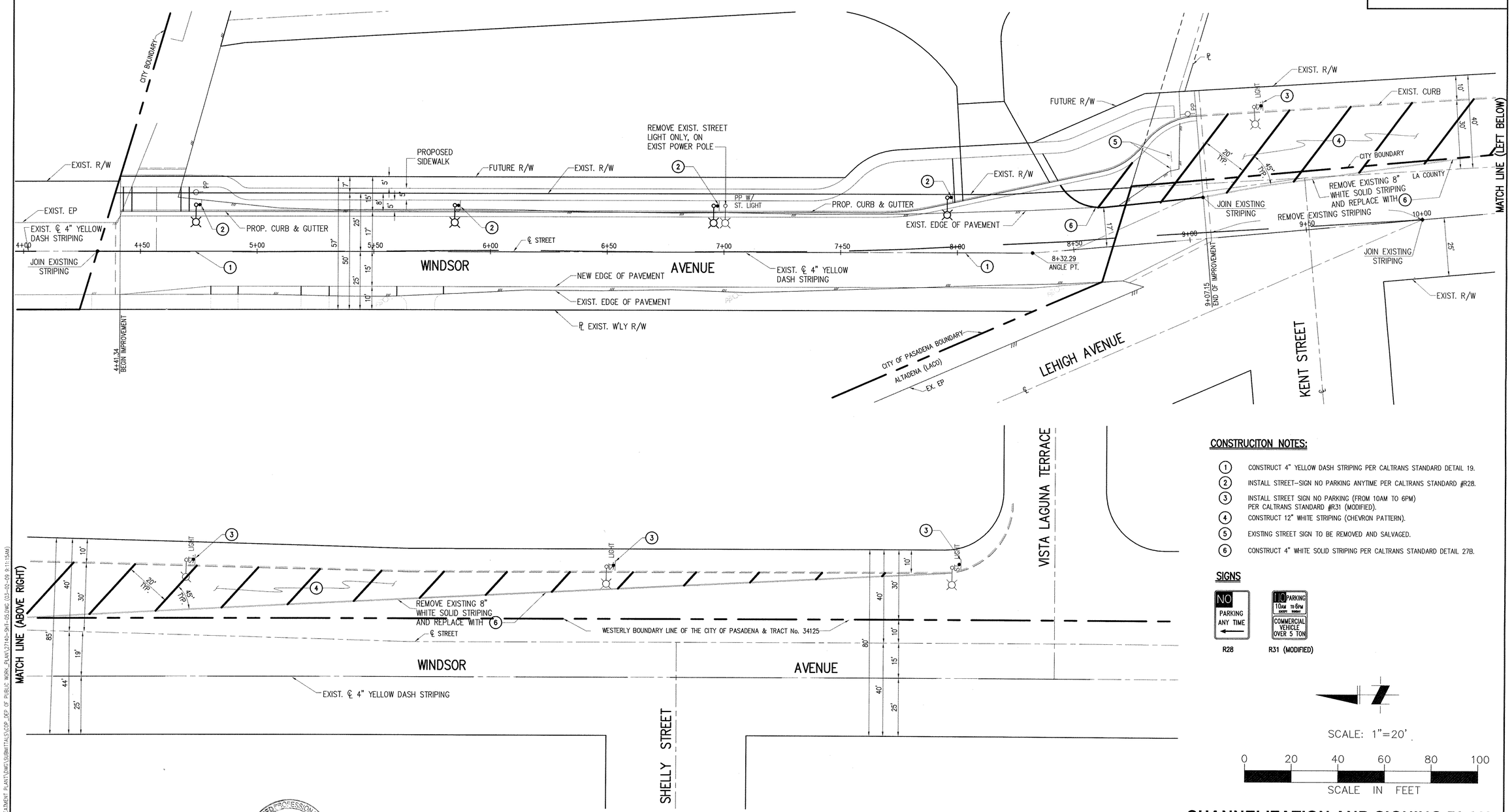


## CONSTRUCITON NOTES:

1. CONSTRUCT 4" YELLOW DASH STRIPING PER CALTRANS STANDARD DETAIL 19.
2. INSTALL STREET-SIGN NO PARKING ANYTIME PER CALTRANS STANDARD #R28.
3. INSTALL STREET SIGN NO PARKING (FROM 10AM TO 6PM) PER CALTRANS STANDARD #R31 (MODIFIED).
4. CONSTRUCT 12" WHITE STRIPING (CHEVRON PATTERN).
5. EXISTING STREET SIGN TO BE REMOVED AND SALVAGED.
6. CONSTRUCT 4" WHITE SOLID STRIPING PER CALTRANS STANDARD DETAIL 27B.

## SIGNS




R28 R31 (MODIFIED)

SCALE: 1"=20'

0 20 40 60 80 100

SCALE IN FEET

# CHANNELIZATION AND SIGNING PLAN

REGISTERED PROFESSIONAL ENGINEER CHRISTOPHER SHEM HAWES 69578 4/30/2010 CIVIL STATE OF CALIFORNIA

PLANS PREPARED BY: CIVILTEC engineering inc. — General Civil, Municipal, Water and Wastewater Engineering, Planning, Construction Management and Surveying. 118 West Lime Avenue, Monrovia, Ca. 91016, Phone: (626) 357-0588, Fax: (626) 303-7957. CHRISTOPHER SHEM HAWES DATE 2/25/09 06/30/10

WATER AND POWER DEPARTMENT — DATE

FIELD BOOK NO. NONE

PROJECT ENGINEER — DATE

TRANSPORTATION ADMINISTRATOR — DATE

DRAWN BY (PRIVATE)
DESIGNED BY (PRIVATE)
CHECKED BY JIM VALENTINE

REVISIONS

| MARK | DATE | DESCRIPTION | BY | CHKD. | APPROVED |
|---|---|---|---|---|---|
| | | AS BUILT | | | |

CITY OF PASADENA – DEPARTMENT OF PUBLIC WORKS

PROJECT: WINDSOR AVENUE IMPROVEMENT
LIMITS: FROM LEHIGH STREET TO 550' NORTH
SCALE: 1" = 20'
ACCOUNT NUMBER: 881000
SHEET 5 OF 8
DWG. NO. 5859

X:\2007\27140-PL WONWHL TREATMENT PLANT\DWG\SUBMITTALS\CIP DEP OF PUBLIC WORK PLAN\27140-SH1-05.DWG (03-02-09 9:11:15AM)

## IRRIGATION NOTES

1. Check and verify all site conditions, utilities, and services prior to trenching.
2. Where trees, light standards, utilities, etc., obstruct spray pattern, adjust and/or relocate piping and sprinkler heads as necessary to obtain full coverage without excessive overthrow. Do not exceed head spacing shown on drawings.
3. If it becomes necessary to relocate or alter sprinkler heads, valves, piping, or other equipment due to changes in site conditions, Contractor shall obtain approval from the Landscape Architect before making such changes.
4. Plans are diagrammatic and approximate. Install all valves and piping in planting areas except where it is not feasible to do so.
5. Sprinkler nozzles specified are available in varying degrees of arcs, and with the addition of pressure compensating screens (PCS). Contractor shall provide for each head the best arc and/or PCS screen to provide adequate coverage and prevent overspray on paving, buildings, etc. at no additional cost.
6. Install all piping, PVC electrical sleeves, etc., under paving prior to paving work. No tees, ells, or other turns in piping are to be located under paving except where shown on drawings. Cap all ends hand tight prior to backfill.
7. Connect each remote control valve to automatic controller with No. 14 pilot wire and No. 14 common wire, type U.F., copper. U.L. approved, solid strand.
8. Set all risers to sprinkler heads and valves with stems perpendicular to finish grade.
9. Contractor to coordinate irrigation work with planting layout to avoid conflicts between piping and plant pits.
10. All materials shall be installed as detailed on the drawings. However, if the plans and/or specifications do not thoroughly describe the methods to be used, the Contractor is to follow the installation methods issued by the manufacturer, with the approval of the Landscape Architect.
11. New pressurized main line piping to be as follows:
    1/2" through 1-1/2" in size - PVC 1120, Schedule 40 solvent weld plastic pipe
    2" and greater - PVC 1120, Class 315 solvent weld plastic pipe
12. Install di-electric unions when dissimilar pipes are connected together. PVC plastic pipe shall be continuously marked with manufacturer's name, pipe size (I.P.S.), class or schedule number, manufacturer's lot number and N.S.F. approval.
13. Design is based on minimum operating pressure and maximum flow demand shown on plan. Contractor shall verify water pressure and report any differences to Landscape Architect prior to construction.
14. Drainage of irrigation water through sprinkler heads will not be allowed. Install an anti-drain valve on riser nipple of any sprinkler head showing drainage after the system has shut off, without additional cost.

## IRRIGATION LEGEND

| SYMBOL | FUNCTION | PATTERN | MANUFACTURER | MODEL # | RADIUS | MIN PSI | GPM |
|---|---|---|---|---|---|---|---|
| | POP-UP HEAD | VARIABLE ARC NOZ. | RAINBIRD | 1806-18VANH | 18' | 30 PSI | 2.66 |
| | POP-UP HEAD | VARIABLE ARC NOZ. | RAINBIRD | 1806-15VANH | 15' | 30 PSI | 1.85 |
| | POP-UP HEAD | HALF | RAINBIRD | 1806-15H | 15' | 30 PSI | 1.85 |
| | POP-UP HEAD | VARIABLE ARC NOZ. | RAINBIRD | 1806-12VANH, 12VANQ | 12' | 30 PSI | 1.3, .65 |
| | POP-UP HEAD | HALF | RAINBIRD | 1806-12H | 12' | 30 PSI | 1.3 |
| | POP-UP HEAD | VARIABLE ARC NOZ. | RAINBIRD | 1806-10VANH, 10VANQ | 10' | 30 PSI | 1.45, .75 |
| | POP-UP HEAD | HALF | RAINBIRD | 1806-10H | 10' | 30 PSI | .79 |
| | POP-UP HEAD | VARIABLE ARC NOZ. | RAINBIRD | 1806-8VANH, 8VANQ | 8' | 30 PSI | 1.19, .72 |
| | POP-UP HEAD | HALF, QUARTER | RAINBIRD | 1806-8H, 8Q | 8' | 30 PSI | .52, .26 |
| | POP-UP HEAD | VARIABLE ARC NOZ. | RAINBIRD | 1806-6VANH | 6' | 30 PSI | .6 |
| | POP-UP HEAD | HALF | RAINBIRD | 1806-5H | 5' | 30 PSI | .2 |
| | POP-UP HEAD | SIDE STP., END STP. | RAINBIRD | 1806-15SST, 15EST | 4X30', 4X30' | 30 PSI | 1.21, .61 |
| | REMOTE CONTROL VALVE | | SUPERIOR | 950 | SEE PLAN FOR SIZE & LOCATION | | |
| | BALL VALVE | | WATTS | FBV | LINE SIZE | | |
| | QUICK COUPLER VALVE | | RAINBIRD | 33DLRC | | | |
| | MAIN LINE | 18" DEEP | SCHED. 40 P.V.C. (CLASS 315 FOR PIPE GREATER THAN 1-1/2" IN SIZE) | | | | |
| | LATERAL LINE | 12" DEEP | SCHED. 40 P.V.C. | | | | |
| | IRRIGATION SLEEVING | | SEE CONSTRUCTION PLAN FOR LOCATION | | | | |
| | VALVE SEQUENCE | | | | | | |
| | GPM | | | | | | |
| | VALVE SIZE | | | | | | |
| | NOTE: USE PRESSURE COMPENSATING SCREENS BY RAINBIRD WHERE RADIUS OF SRAY NOZZLES ARE SIGNIFICANTLY REDUCED | | | | | | |

SUBMITTED

APPROVED

DANIEL A. RIX — DATE
CITY ENGINEER
REGISTERED CIVIL ENGINEER NO. 38689
REGISTRATION EXPIRES MARCH 31, 2009

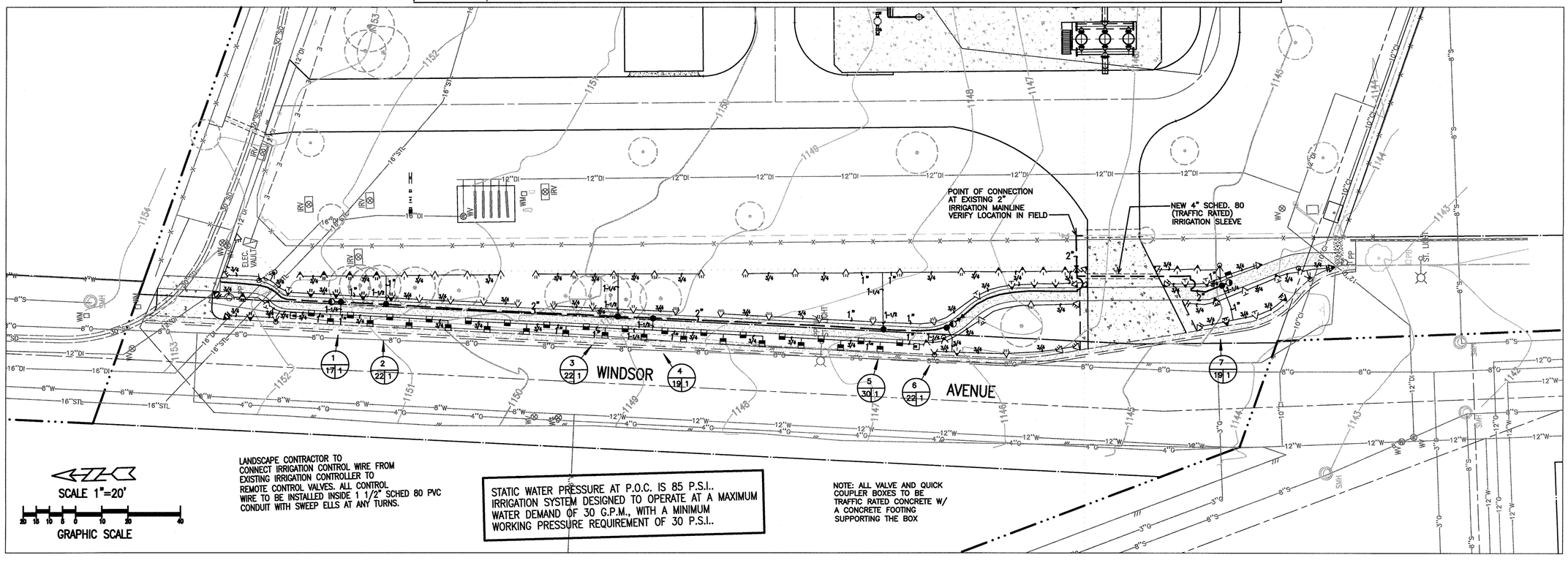


LANDSCAPE CONTRACTOR TO CONNECT IRRIGATION CONTROL WIRE FROM EXISTING IRRIGATION CONTROLLER TO REMOTE CONTROL VALVES. ALL CONTROL WIRE TO BE INSTALLED INSIDE 1 1/2" SCHED 80 PVC CONDUIT WITH SWEEP ELLS AT ANY TURNS.

STATIC WATER PRESSURE AT P.O.C. IS 85 P.S.I.. IRRIGATION SYSTEM DESIGNED TO OPERATE AT A MAXIMUM WATER DEMAND OF 30 G.P.M., WITH A MINIMUM WORKING PRESSURE REQUIREMENT OF 30 P.S.I..

NOTE: ALL VALVE AND QUICK COUPLER BOXES TO BE TRAFFIC RATED CONCRETE W/ A CONCRETE FOOTING SUPPORTING THE BOX

REGISTERED LANDSCAPE ARCHITECT — ANNA M. ARMSTRONG — 2/10/09 — No. 2293 Exp. 03/31/10 — STATE OF CALIFORNIA


PLANS PREPARED BY:
ARMSTRONG AND WALKER
Landscape Architecture
1835 Royal Oaks Dr. North
Bradbury, Ca. 91008
Phone: (626) 357-4599
Fax: (626) 357-6536

PLANS PREPARED BY:
CIVILTEC engineering inc.
General Civil, Municipal, Water and Wastewater Engineering, Planning, Construction Management and Surveying
118 West Lime Avenue
Monrovia, Ca. 91016
Phone: (626) 357-0588
Fax: (626) 303-7957
CHRISTOPHER SHEM HAWES


DATE 2/09/08
06/30/10

DRAWN BY (PRIVATE)
DESIGNED BY (PRIVATE)
CHECKED BY JO

REVISIONS

| MARK | DATE | DESCRIPTION | BY | CHKD. | APPROVED |
|---|---|---|---|---|---|
| | | AS BUILT | | | |

IRRIGATION PLAN PHASE 2

CITY OF PASADENA—DEPARTMENT OF PUBLIC WORKS

PROJECT: WINDSOR AVENUE IMPROVEMENT
LIMITS: FROM LEHIGH STREET TO 550' NORTH
SCALE: AS SHOWN
ACCOUNT NUMBER: 881000
SHEET 6 OF 8
DWG. NO. 5859

C:\DOCUMENTS AND SETTINGS\ANNA\MY DOCUMENTS\PROJECTS 1\PL WATER TREATMENT\NEW\AUTOCAD\IRRIGATION PLAN PHASE 2.DWG (02-10-09 10:12:

## PLANTING NOTES

1. Contractor shall maintain a qualified supervisor on the site at all times during installation through completion of work.
2. Contractor shall verify all plant material species and quantities prior to installation. Plant quantities are listed for the convenience of the Contractor; actual number of plant symbols shown on plan shall have priority over quantity listed.
3. All container grown plants and ground covers and installation per the plans are to be provided and paid for by the Contractor. Contractor shall be responsible for the continuous protection of all plants upon delivery to the site and throughout construction.
4. All plant materials shall be inspected and are subject to approval prior to installation by the City and/or Landscape Architect.
5. Remove all debris, weeds, excess material, and rocks larger than 2" in diameter from landscape areas prior to soil preparation and again prior to planting.
6. Excavate plant pits for trees and shrubs twice the diameter and 1-1/2 times the depth of the root ball. Use native soil without amending for backfill to the bottom of the root ball, and the following backfill mix, thoroughly mixed, around the root ball to the surface:
   3 parts by volume on-site soil
   1 part by volume nitrogen stabilized organic amendment (fir or cedar shavings)
   Gro-Power Controlled Release fertilizer, quantity per manufacturer's specifications
   Mycor PlantSaver mycorrhizal fungi inoculant, quantity per manufacturer's specifications (available from J. Harold Mitchell Co., San Gabriel, CA 626-287-1101)
7. Fine grade all planting areas to achieve surface drainage toward street or storm drains.
8. Stake trees according to detail shown on plans.
9. Following completion of planting, spread a continuous 3" thick layer of shredded bark mulch in newly planted areas.
10. Upon completion, remove all extraneous material and debris from the site, and rake the area clean.
11. Contractor shall include in his bid maintenance of the landscape for 60 days, including weeding, pruning, cleanup, adjustment of irrigation system, and replacement of dead or damaged plants.
12. Contractor shall guarantee all shrubs for a period of 90 days and all trees for a period of one year following completion of the 60 day maintenance period, and shall replace any dead plants at no cost to the City unless neglect or damage by City can be shown.

## PLANT LEGEND

| SYMBOL | BOTANICAL NAME | COMMON NAME | SIZE | QUANT. |
|---|---|---|---|---|
| **Trees** | | | | |
| P I | Pistacia chinense | Chinese Pistache | 36" box | 5 |
| Q A | Quercus agrifolia | Coast Live Oak | 36" box | 4 |
| **Shrubs** | | | | |
| A E | Arctostaphylos edmundsii 'Carmel Sur' | Carmel Sur Manzanita | 5 gallon | 91 |
| B G | Berberis 'Golden Abundance' | Golden Abundance Barberry | 5 gallon | 38 |
| C M | Coprosma repens 'Marble Queen' | Variegated Mirror Plant | 5 gallon | 56 |
| **Perennials and Grasses** | | | | |
| A C | Artemisia californica 'Montara' | Montara Calif. Sagebrush | 1 gallon | 96 |
| A M | Achillea millefolium hybrids | Yarrow Hybrids | 1 gallon | 66 |
| E C | Encelia californica | California Sunflower | 1 gallon | 46 |
| F C | Festuca californica | California Fescue | 1 gallon | 74 |
| P C | Penstemon centranthifolius | Scarlet Bugler | 1 gallon | 62 |
| S B | Salvia 'Bee's Bliss' | Bee's Bliss Groundcover Sage | 1 gallon | 112 |
| Z C | Zauchneria californica 'Catalina' | California Fuchsia | 1 gallon | 62 |

Note: Install 3" thick layer of shredded bark mulch in all shrub areas following completion of planting.

| SUBMITTED | APPROVED |
|---|---|
| | DANIEL A. RIX — DATE<br>CITY ENGINEER<br>REGISTERED CIVIL ENGINEER NO. 38689<br>REGISTRATION EXPIRES MARCH 31, 2009 |

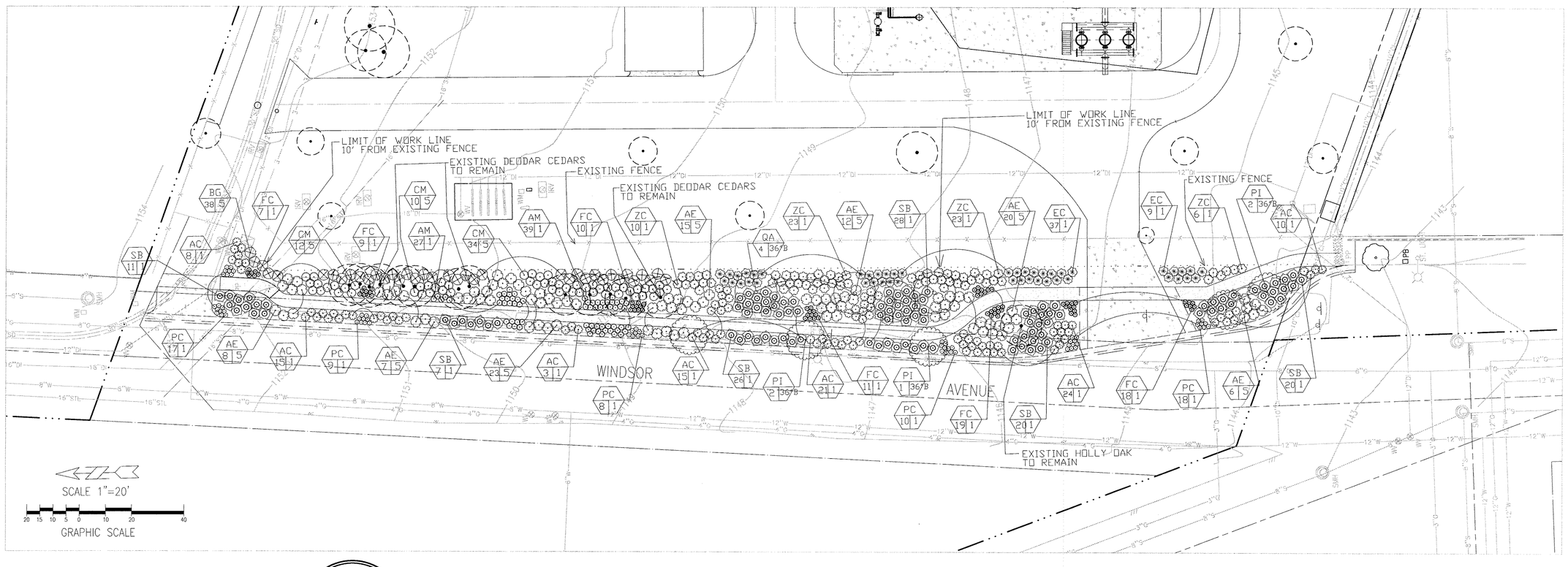


PLANTING PLAN PHASE 2

REGISTERED LANDSCAPE ARCHITECT — ANNA M. ARMSTRONG — No. 2293 — Exp. 03/31/10 — STATE OF CALIFORNIA

PLANS PREPARED BY:
ARMSTRONG AND WALKER
*Landscape Architecture*
1835 Royal Oaks Dr. North
Bradbury, Ca. 91008
Phone: (626) 357-4599
Fax: (626) 357-6336

PLANS PREPARED BY:
CIVILTEC engineering inc.
*General Civil, Municipal, Water and Wastewater Engineering, Planning, Construction Management and Surveying*
118 West Lime Avenue
Monrovia, Ca. 91016
Phone: (626) 357-0588
Fax: (626) 303-7957
DATE 2/09/08
CHRISTOPHER SHEM HAWES 06/30/10

DRAWN BY (PRIVATE)
DESIGNED BY (PRIVATE)
CHECKED BY JO

REVISIONS

| MARK | DATE | DESCRIPTION | BY | CHKD. | APPROVED |
|---|---|---|---|---|---|
| | | AS BUILT | | | |

CITY OF PASADENA–DEPARTMENT OF PUBLIC WORKS

PROJECT **WINDSOR AVENUE IMPROVEMENT**
LIMITS FROM LEHIGH STREET TO 550' NORTH
SCALE AS SHOWN
ACCOUNT NUMBER 881000
SHEET 7 OF 8
DWG. NO. 5859

C:\DOCUMENTS AND SETTINGS\ANNA\MY DOCUMENTS\PROJECTS 1\JPL WATER TREATMENT\NEWAUTOCAD\PLANTING PLAN PHASE 2.DWG (02-10-09 10:13:18

| SUBMITTED | APPROVED |
|---|---|
| | **DANIEL A. RIX** DATE<br>CITY ENGINEER<br>REGISTERED CIVIL ENGINEER NO. 38689<br>REGISTRATION EXPIRES MARCH 31, 2009 |

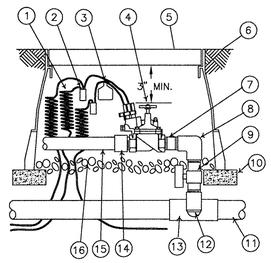


1. 30-INCH LINEAR LENGTH OF WIRE COILED
2. WATER PROOF CONNECTION ( 1 OF 2 )
3. ID TAG
4. REMOTE CONTROL VALVE SUPERIOR 950
5. BROOKES BROTHERS CONCRETE VALVE BOX
6. FINISH GRADE/ TOP OF MULCH
7. PVC SCH 40 NIPPLE (CLOSE)
8. PVC SCH 40 ELL
9. INSTALL LINE SIZE BALL VALVE
10. CONCRETE FOOTING
11. PVC MAINLINE PIPE
12. SCH 80 NIPPLE ( 2- INCH LENGTH HIDDEN) AND SCH 40 ELL
13. PVC SCH 40 TEE OR ELL
14. LINE SIZE UNION
15. PVC LATERAL PIPE
16. 3.0- INCH MINIMUM DEPTH OF 3/4"- WASHED GRAVEL

A. REMOTE CONTROL VALVE

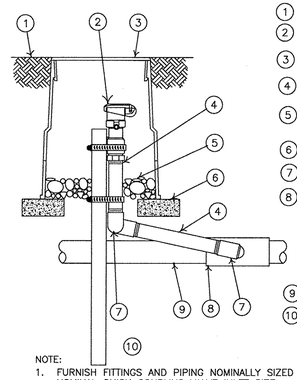

1. FINISH GRADE/ TOP OF MULCH
2. QUICK- COUPLING VALVE: RAIN BIRD MODEL 33DNP
3. BROOKES BROTHERS CONCRETE VALVE BOX
4. PVC SCH 80 NIPPLE ( LENGTH AS REQUIRED )
5. 3- INCH MINIMUM DEPTH OF 3/4" - INCH WASHED GRAVEL
6. CONCRETE FOOTING
7. PVC SCH 80 STREET ELL
8. PVC SCH 80 TEE OR ELL
9. PVC SCH 40 ELL
10. 2"X18" GALVANIZED PIPE W/ STAINLESS STEEL GEAR CLAMPS OR EQUIVALENT SUPPORT SYSTEM

NOTE:
1. FURNISH FITTINGS AND PIPING NOMINALLY SIZED IDENTICAL TO NOMINAL QUICK COUPLING VALVE INLET SIZE.

B. QUICK-COUPLING VALVE

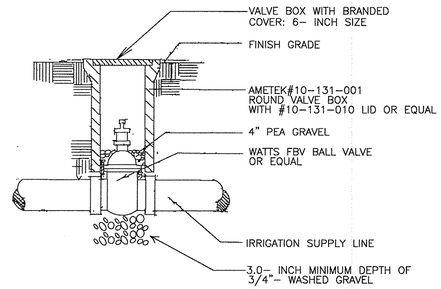


C. BALL VALVE

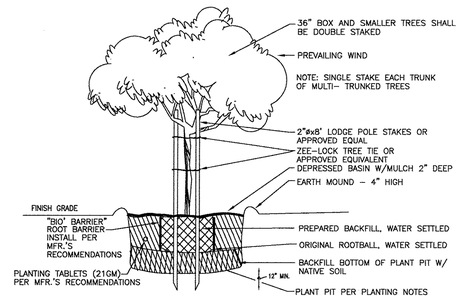


TREE STAKING NO SCALE

G. TREE PLANTING

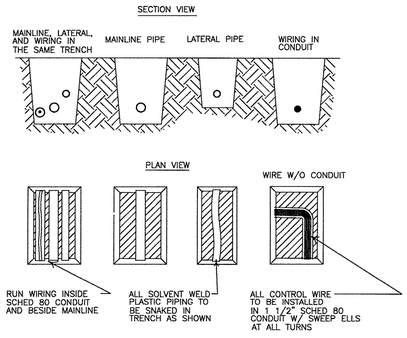


NOTES:
1. SLEEVE BELOW ALL HARDSCAPE ELEMENTS WITH SCH 40 PVC TWICE THE DIAMETER OF THE PIPE OR WIRE BUNDLE WITHIN.
2. FOR PIPE AND WIRE BURIAL DEPTHS SEE SPECFICATIONS.

D. PIPE & WIRE TRENCHING

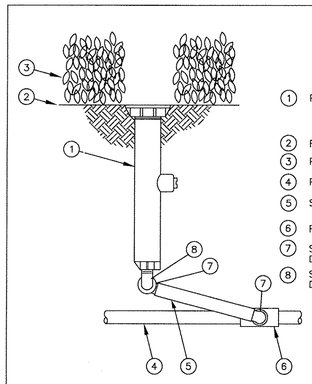

1. POP-UP SPRAY SPRINKLER: RAIN BIRD 1806
2. FINISH GRADE/TOP OF MULCH
3. PLANT MATERIAL
4. PVC LATERAL PIPE
5. SCHED. 80 PVC NIPPLE RAIN BIRD MODEL SA 6050
6. PVC SCH 80 TEE OR ELL
7. SCHED. 80 PVC TXT 90 DEG. STREET ELL
8. SCHED. 80 PVC TXT 90 DEG. ELL

E. POP-UP SPRAY SPRINKLER

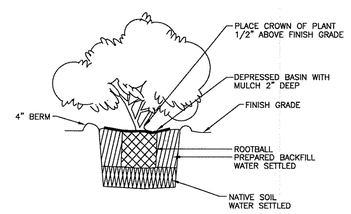


SHRUB PLANTING NO SCALE

F. SHRUB PLANTING

REGISTERED LANDSCAPE ARCHITECT
ANNA M. ARMSTRONG
No. 2293
Exp. 03/31/10
STATE OF CALIFORNIA

| PLANS PREPARED BY: | PLANS PREPARED BY: | DRAWN BY (PRIVATE) | REVISIONS | | | | | | CITY OF PASADENA-DEPARTMENT OF PUBLIC WORKS | | |
|---|---|---|---|---|---|---|---|---|---|---|---|
| ARMSTRONG AND WALKER<br>*Landscape Architecture*<br>1835 Royal Oaks Dr. North<br>Bradbury, Ca. 91008<br>Phone: (626) 357-4599<br>Fax: (626) 357-6536 | CIVILTEC *engineering inc.*<br>*General Civil, Municipal, Water and Wastewater Engineering, Planning, Construction Management and Surveying*<br>118 West Lime Avenue<br>Monrovia, Ca. 91016<br>Phone: (626) 357-0588<br>Fax: (626) 303-7957<br>DATE 2/09/08<br>CHRISTOPHER SHEM HAWES 06/30/10 | DESIGNED BY (PRIVATE)<br>CHECKED BY JO | MARK | DATE | DESCRIPTION | BY | CHKD. | APPROVED | PROJECT **WINDSOR AVENUE IMPROVEMENT** | SHEET 8 OF 8 | |
| | | | | | | | | | LIMITS FROM LEHIGH STREET TO 550' NORTH | DWG. NO. 5859 | |
| | | | | | AS BUILT | | | | SCALE AS SHOWN | ACCOUNT NUMBER 881000 | |

C:\DOCUMENTS AND SETTINGS\ANNA\MY DOCUMENTS\PROJECTS 1\JPL WATER TREATMENT\NEWAUTOCAD\IRRIGATION DETAILS PHASE 2.DWG (02-10-09 10:

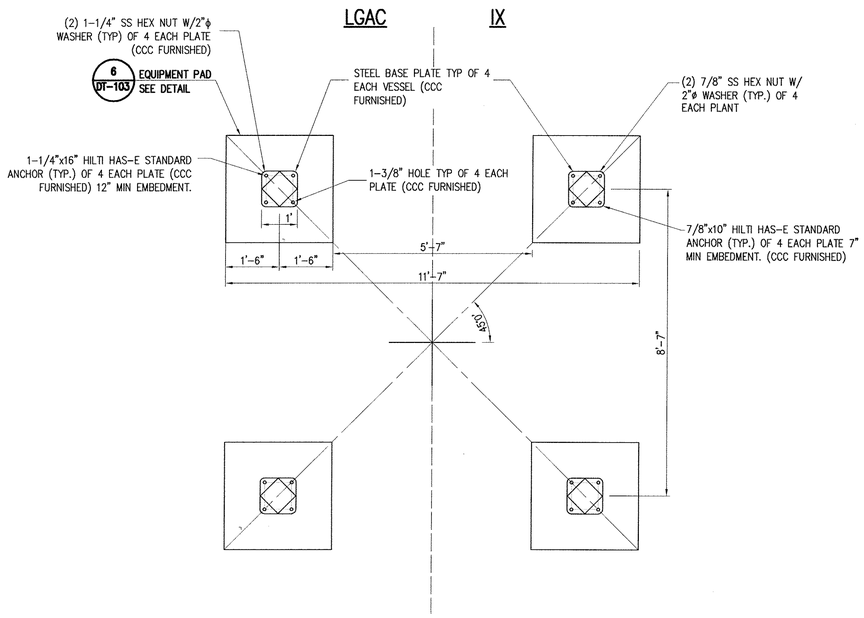


VESSEL LEG ANCHOR DETAIL (1 / TPS-101)

1/2"=1' SCALE

SCALE 1"=10'

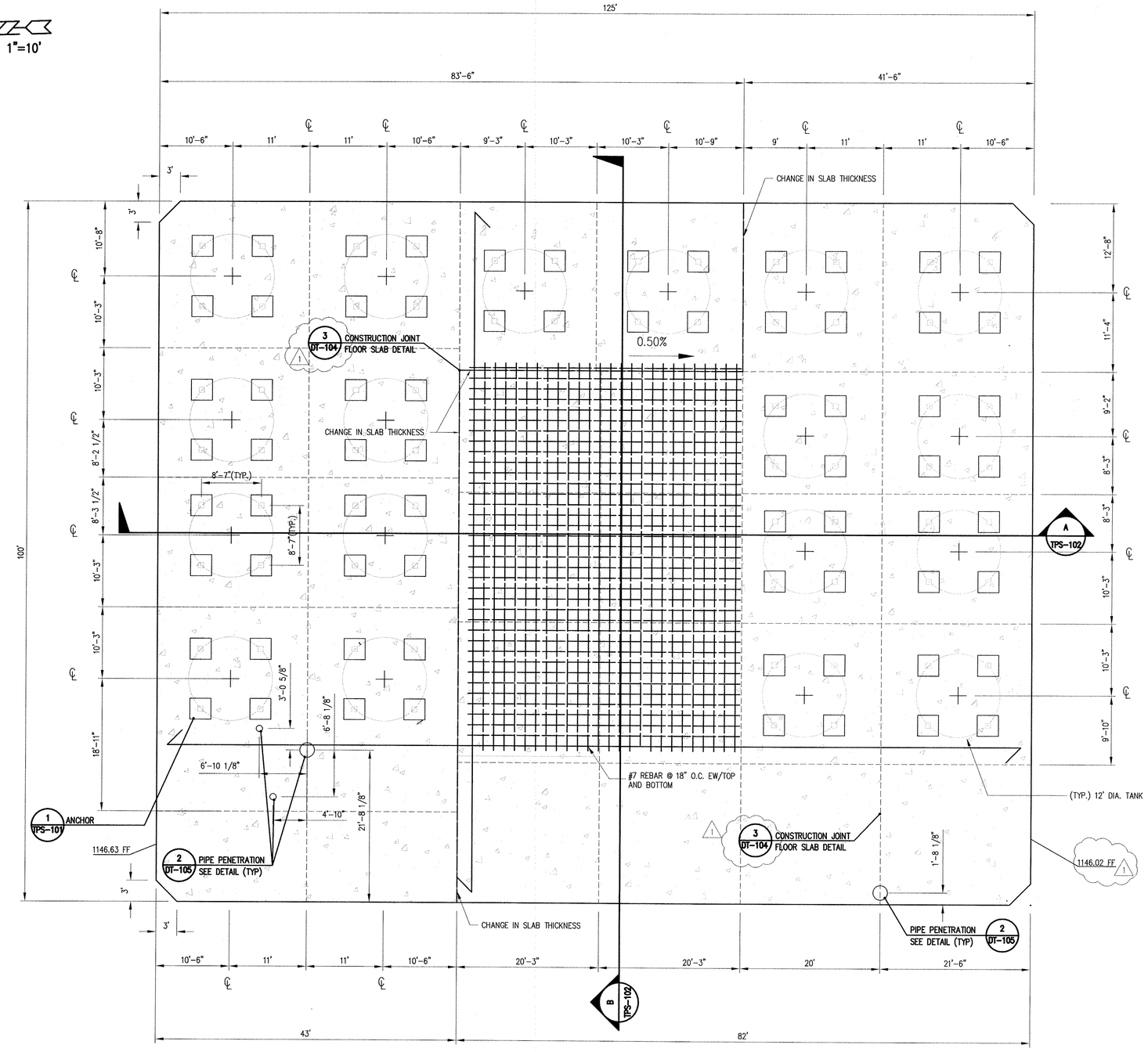


| REVISION | | |
|---|---|---|
| NO. | DESCRIPTION | DATE |
| 1 | BUILDING DEPARTMENT PLAN CHECK COMMENTS | 01/05/09 |

REGISTERED PROFESSIONAL ENGINEER CHRISTOPHER SHEM HAWES 69578 6/30/2010 CIVIL STATE OF CALIFORNIA

APPROVED BY: C. Shem Hawes 69578 CHRISTOPHER SHEM HAWES RCE — DATE 2/25/08

APPROVED: — DATE

APPROVED: — DATE

PLANS PREPARED BY:

CIVILTEC engineering inc.

*General Civil, Municipal, Water and Wastewater Engineering, Planning, Construction Management and Surveying*

118 West Lime Avenue
Monrovia, Ca. 91016
Phone: (626) 357-0588
Fax: (626) 303-7957

Battelle
*The Business of Innovation*

CITY OF PASADENA INCORPORATED JUNE 1886

D.S.-209 & 210A

| DATE | SCALE | PASADENA WATER & POWER CITY OF PASADENA | SHEET NO 24 OF 79 SHEETS |
|---|---|---|---|
| FEBRUARY 2009 | AS SHOWN | | |
| DRAWN BY CIVILTEC | | MONK HILL TREATMENT SYSTEM | WORK ORDER 02557 / FILE NUMBER E-1670 |
| DESIGNED BY CIVILTEC | | | |
| CHECKED BY CIVILTEC | | TREATMENT PAD PLAN | |
| SUBMITTED BY CIVILTEC | | | |
| FIELD BOOKS / CALC BOOKS | | APPROVED / APPROVED | REVISION |

TPS-101

X:\2007\27140-PL MONKHILL TREATMENT PLANT\DWG\SUBMITTALS\FINAL SUBMITTAL\27140-TPS-101.DWG (02-26-09 2:34:39PM)

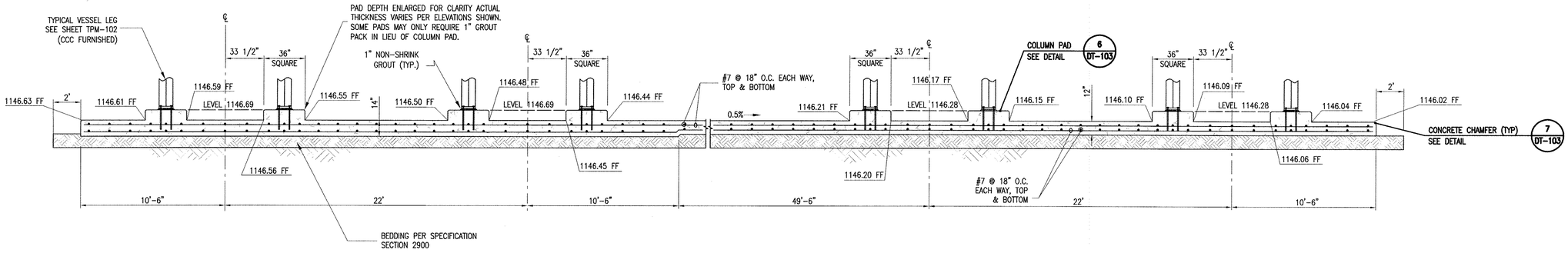


## TYPICAL RAISED PAD SECTION (A / TPS-101)

SCALE: 1/4"=1'-0"

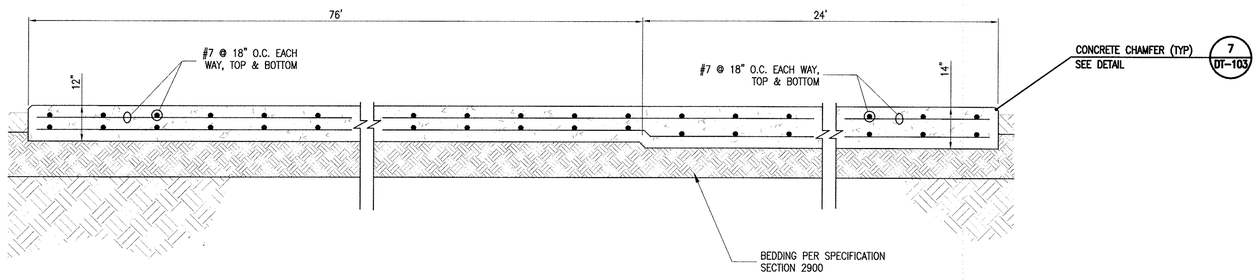


## TYPICAL FOUNDATION SECTION (B / TPS-101)

SCALE: 1/2"=1'-0"

TPS-102

| REVISION | | |
|---|---|---|
| NO. | DESCRIPTION | DATE |
| | | |
| | | |
| | | |
| | | |

REGISTERED PROFESSIONAL ENGINEER — CHRISTOPHER SHEM HAWES — 69578 — 6/30/2010 — CIVIL — STATE OF CALIFORNIA

APPROVED BY: 69578 CHRISTOPHER SHEM HAWES RCE — 2/25/08 DATE
APPROVED: — DATE
APPROVED: — DATE

PLANS PREPARED BY:
CIVILTEC engineering inc.
*General Civil, Municipal, Water and Wastewater Engineering, Planning, Construction Management and Surveying*
118 West Lime Avenue
Monrovia, Ca. 91016
Phone: (626) 357-0588
Fax: (626) 303-7957

Battelle — The Business of Innovation

CITY OF PASADENA — INCORPORATED JUNE 1886

D.S.-209 & 210A

| DATE | SCALE | PASADENA WATER & POWER CITY OF PASADENA | SHEET NO 25 OF 79 SHEETS |
|---|---|---|---|
| FEBRUARY 2009 | AS SHOWN | | |
| DRAWN BY CIVILTEC | | MONK HILL TREATMENT SYSTEM CONCRETE PAD SECTIONS | WORK ORDER 02557 / FILE NUMBER E-1670 |
| DESIGNED BY CIVILTEC | | | |
| CHECKED BY CIVILTEC | | | |
| SUBMITTED BY CIVILTEC | | | |
| FIELD BOOKS | CALC BOOKS | APPROVED / APPROVED | REVISION |

X:\20073\27140-CR_MONKHILL_TREATMENT_PLANT\DWG\SUBMITTALS\FINAL SUBMITTAL\27140-TPS-102.DWG (02-26-09 2:35:02PM)

SCALE 1"=10'

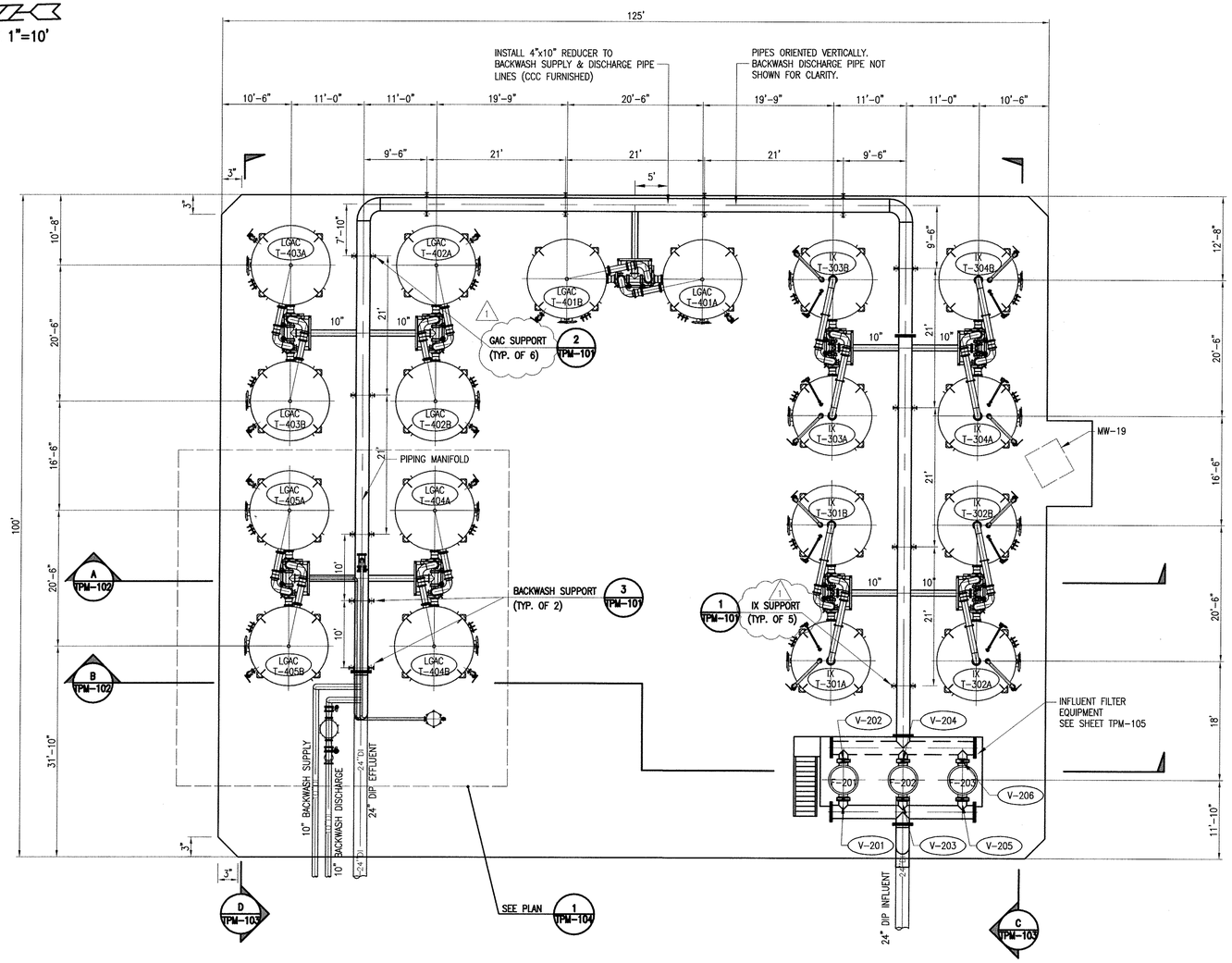


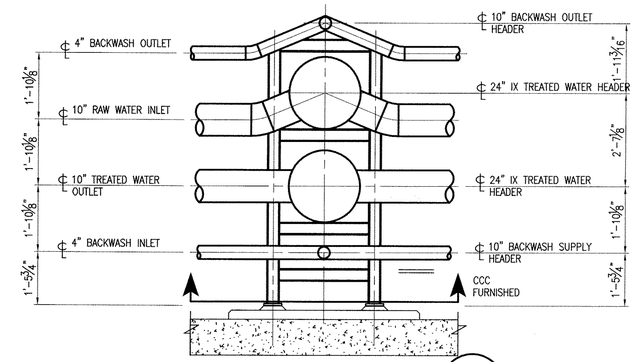


IX AREA PIPE RACK DETAIL 1 TPM-101

1/4"=1' SCALE

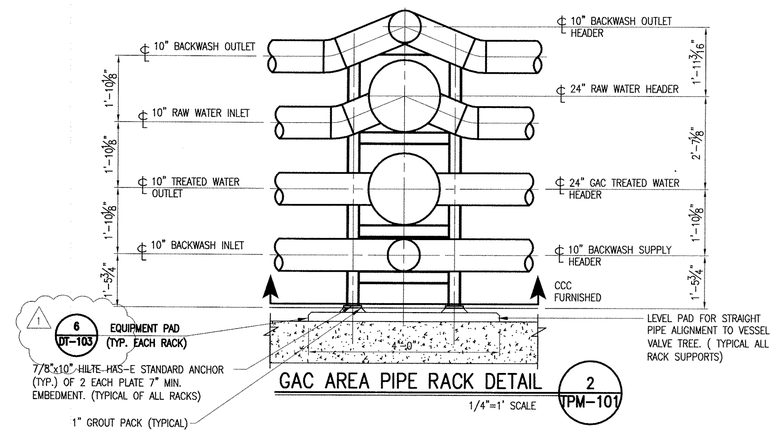


GAC AREA PIPE RACK DETAIL 2 TPM-101

1/4"=1' SCALE

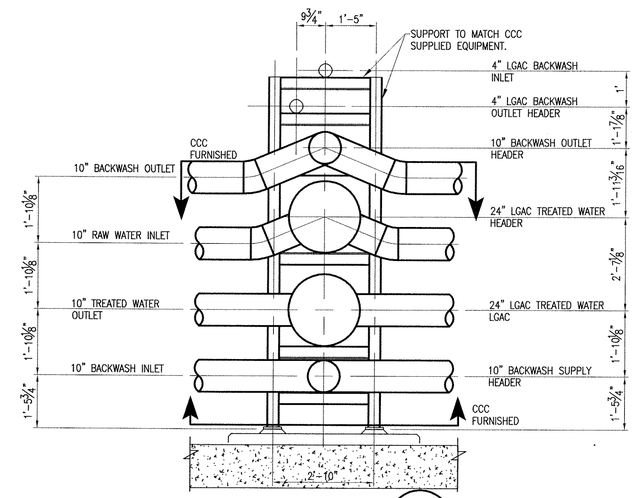


BACKWASH FILTER AREA DETAIL 3 TPM-101

1/4"=1' SCALE

TPM-101

| REVISION | | |
|---|---|---|
| NO. | DESCRIPTION | DATE |
| 1 | BUILDING DEPARTMENT PLAN CHECK COMMENTS | 01/05/09 |

REGISTERED PROFESSIONAL ENGINEER CHRISTOPHER SHEM HAWES 69578 6/30/2010 CIVIL STATE OF CALIFORNIA

APPROVED BY: C. Shem Hawes 69578 2/25/08
CHRISTOPHER SHEM HAWES RCE DATE
APPROVED: DATE
APPROVED: DATE

PLANS PREPARED BY:
CIVILTEC engineering inc.
*General Civil, Municipal, Water and Wastewater Engineering, Planning, Construction Management and Surveying*
118 West Lime Avenue
Monrovia, Ca. 91016
Phone: (626) 357-0588
Fax: (626) 303-7957

Battelle
*The Business of Innovation*

CITY OF PASADENA INCORPORATED JUNE 1886

D.S.-209 & 210A

| | | | |
|---|---|---|---|
| DATE FEBRUARY 2009 | SCALE AS SHOWN | PASADENA WATER & POWER CITY OF PASADENA | SHEET NO 26 OF 79 SHEETS |
| DRAWN BY CIVILTEC / DESIGNED BY CIVILTEC / CHECKED BY CIVILTEC / SUBMITTED BY CIVILTEC | | MONK HILL TREATMENT SYSTEM VESSELS PLAN | WORK ORDER 02557 / FILE NUMBER E-1670 |
| FIELD BOOKS | CALC BOOKS | APPROVED / APPROVED | REVISION |

X:\2007\27140-JPL MONKHILL TREATMENT PLANT\DWG\SUBMITTAL\FINAL SUBMITTAL\27140-TPM-101.DWG (02-25-09 2:36:09PM)

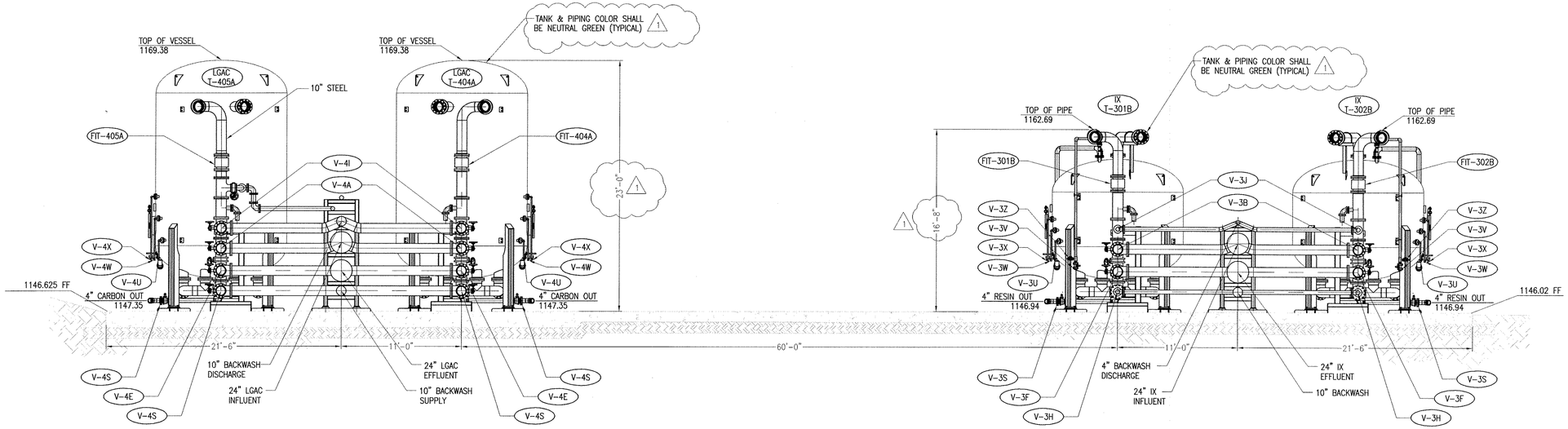


## TREATMENT VESSELS ELEVATION (A / TPM-101)

SCALE: 3/16"=1'-0"

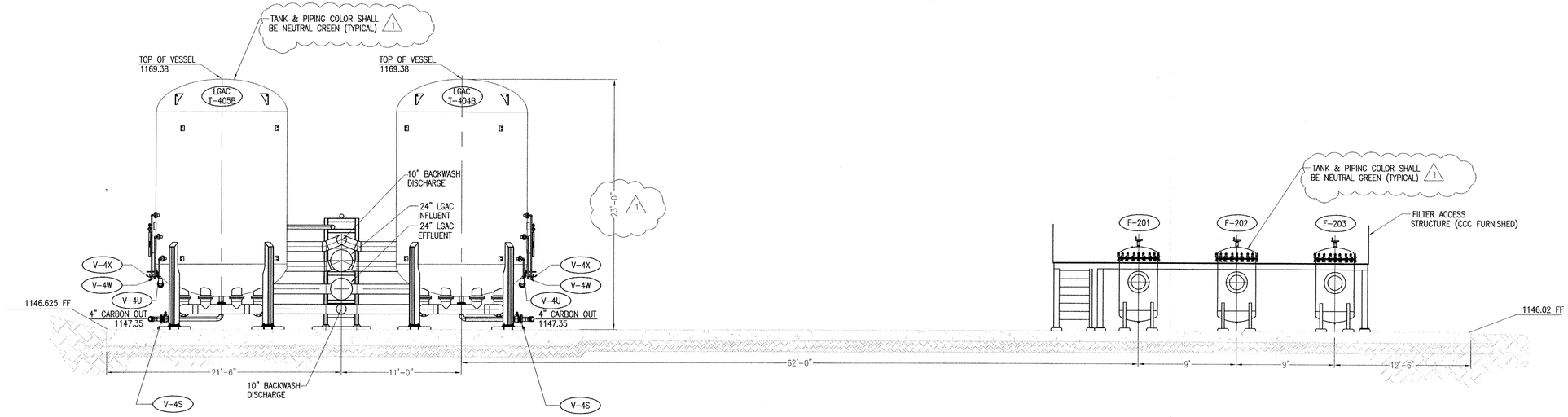


## FILTER VESSELS ELEVATION (B / TPM-101)

SCALE: 3/16"=1'-0"

TPM-102

| REVISION | | |
|---|---|---|
| NO. | DESCRIPTION | DATE |
| 1 | BUILDING DEPARTMENT PLAN CHECK COMMENTS | 01/05/09 |

REGISTERED PROFESSIONAL ENGINEER CHRISTOPHER SHEM HAWES 69578 6/20/2010 CIVIL STATE OF CALIFORNIA

APPROVED BY: C. Shem Hawes 69578 CHRISTOPHER SHEM HAWES RCE — 2/25/08 DATE
APPROVED: _____ DATE
APPROVED: _____ DATE

PLANS PREPARED BY:
CIVILTEC engineering inc.
*General Civil, Municipal, Water and Wastewater Engineering, Planning, Construction Management and Surveying*
118 West Lime Avenue
Monrovia, Ca. 91016
Phone: (626) 357-0588
Fax: (626) 303-7957

Battelle
*The Business of Innovation*

CITY OF PASADENA INCORPORATED JUNE 1886

D.S.-209 & 210A

| DATE | SCALE | PASADENA WATER & POWER CITY OF PASADENA | SHEET NO 27 OF 79 SHEETS |
|---|---|---|---|
| FEBRUARY 2009 | AS SHOWN | | |
| DRAWN BY CIVILTEC | | MONK HILL TREATMENT SYSTEM VESSELS ELEVATIONS | WORK ORDER 02557 / FILE NUMBER E-1670 |
| DESIGNED BY CIVILTEC | | | |
| CHECKED BY CIVILTEC | | | |
| SUBMITTED BY CIVILTEC | | | |
| FIELD BOOKS | CALC BOOKS | APPROVED / APPROVED | REVISION |

X:\20070-07445-PL WONHILL TREATMENT PLANT\DWG\SUBMITTALS\FINAL SUBMITTAL\07145-TPM-102.DWG (02-27-09 8:31:17AM)

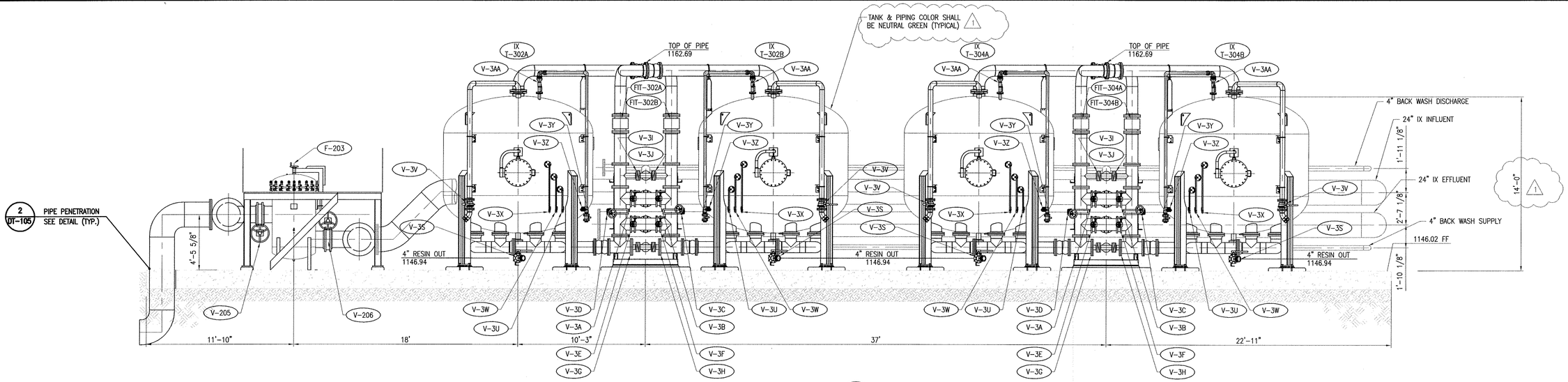


## IX VESSEL ELEVATION

C / TPM-101

SCALE: 1/4"=1'-0"

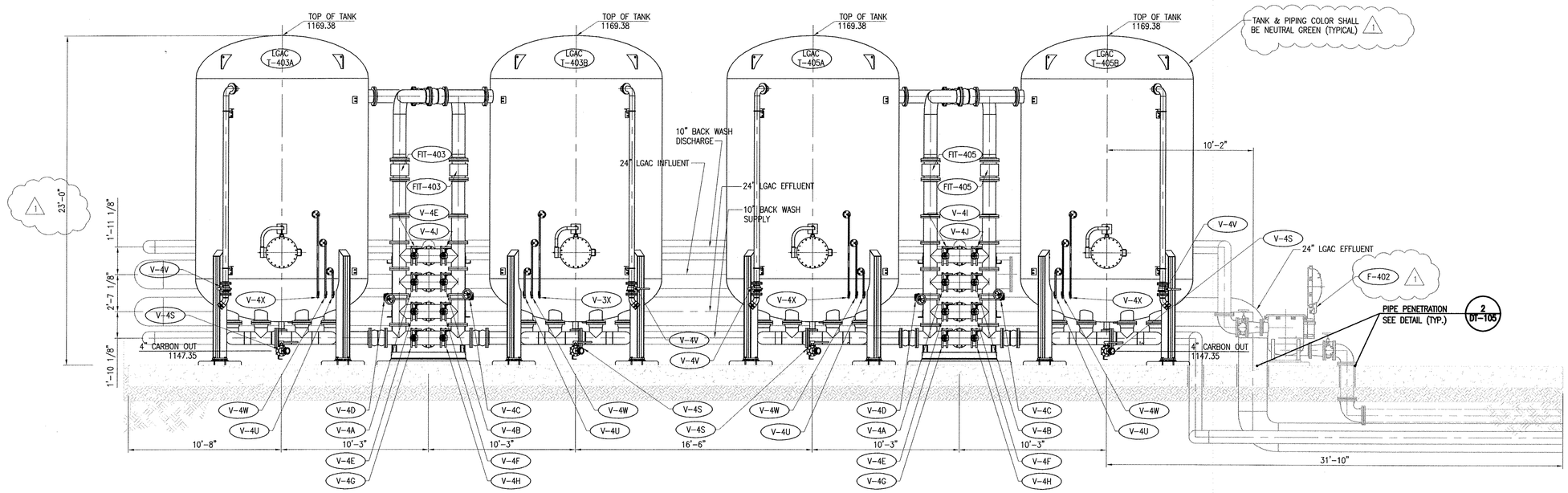


## LGAC VESSEL ELEVATION

D / TPM-101

SCALE: 1/4"=1'-0"

TPM-103

| REVISION | | |
|---|---|---|
| NO. | DESCRIPTION | DATE |
| 1 | BUILDING DEPARTMENT PLAN CHECK COMMENTS | 01/05/09 |

REGISTERED PROFESSIONAL ENGINEER CHRISTOPHER SHEM HAWES 69578 6/30/2010 CIVIL STATE OF CALIFORNIA

APPROVED BY: C. Shem Hawes 69578 2/25/08
CHRISTOPHER SHEM HAWES RCE — DATE
APPROVED: — DATE
APPROVED: — DATE

PLANS PREPARED BY:

CIVILTEC engineering inc.

*General Civil, Municipal, Water and Wastewater Engineering, Planning, Construction Management and Surveying*

118 West Lime Avenue
Monrovia, Ca. 91016
Phone: (626) 357-0588
Fax: (626) 303-7957

Battelle
*The Business of Innovation*

CITY OF PASADENA INCORPORATED JUNE, 1886

D.S.-209 & 210A

| | | | |
|---|---|---|---|
| DATE: FEBRUARY 2009 | SCALE: AS SHOWN | PASADENA WATER & POWER CITY OF PASADENA | SHEET NO 28 OF 79 SHEETS |
| DRAWN BY CIVILTEC; DESIGNED BY CIVILTEC; CHECKED BY CIVILTEC; SUBMITTED BY CIVILTEC | | MONK HILL TREATMENT SYSTEM VESSELS ELEVATIONS | WORK ORDER 02557 / FILE NUMBER E-1670 |
| FIELD BOOKS | CALC BOOKS | APPROVED / APPROVED | REVISION |

J:\02007-07140-JPL WORKFIL TREATMENT PLANT\DWGS\SUBMITTALS\FINAL SUBMITTAL\27140-TPM-103.DWG (02-27-09 8:49:16AM)

## CONSTRUCTION NOTES

1. INSTALL 4" STEEL PIPE, PExPE
2. INSTALL 4" STEEL PIPE, FExFE
3. INSTALL 4" STEEL PIPE, FExPE
4. INSTALL 4"-90° STEEL BEND, PExPE
5. INSTALL 4"-90° STEEL BEND, FExFE
6. INSTALL 4"x4"x4" STEEL TEE, FExFExFE
7. INSTALL 4" BUTTERFLY VALVE, FExFE, WITH HANDWHEEL AND CHAIN
8. INSTALL 10"x8" STEEL REDUCER, FExFE
9. INSTALL 10" DUCTILE IRON PIPE, MJxFE
10. INSTALL 10"-90° DUCTILE IRON BEND, MJxMJ
11. INSTALL 10" ISOLATION KIT
12. INSTALL 10"-90° STEEL BEND, FExFE
13. INSTALL 10"x10"x4" STEEL TEE, FExFExFE
14. INSTALL 10" BUTTERFLY VALVE, FExFE, WITH HANDWHEEL AND CHAIN.
15. INSTALL CONCRETE PEDESTAL
16. INSTALL PIPE SUPPORT PER DETAIL 3, ON SHEET TPM-101.

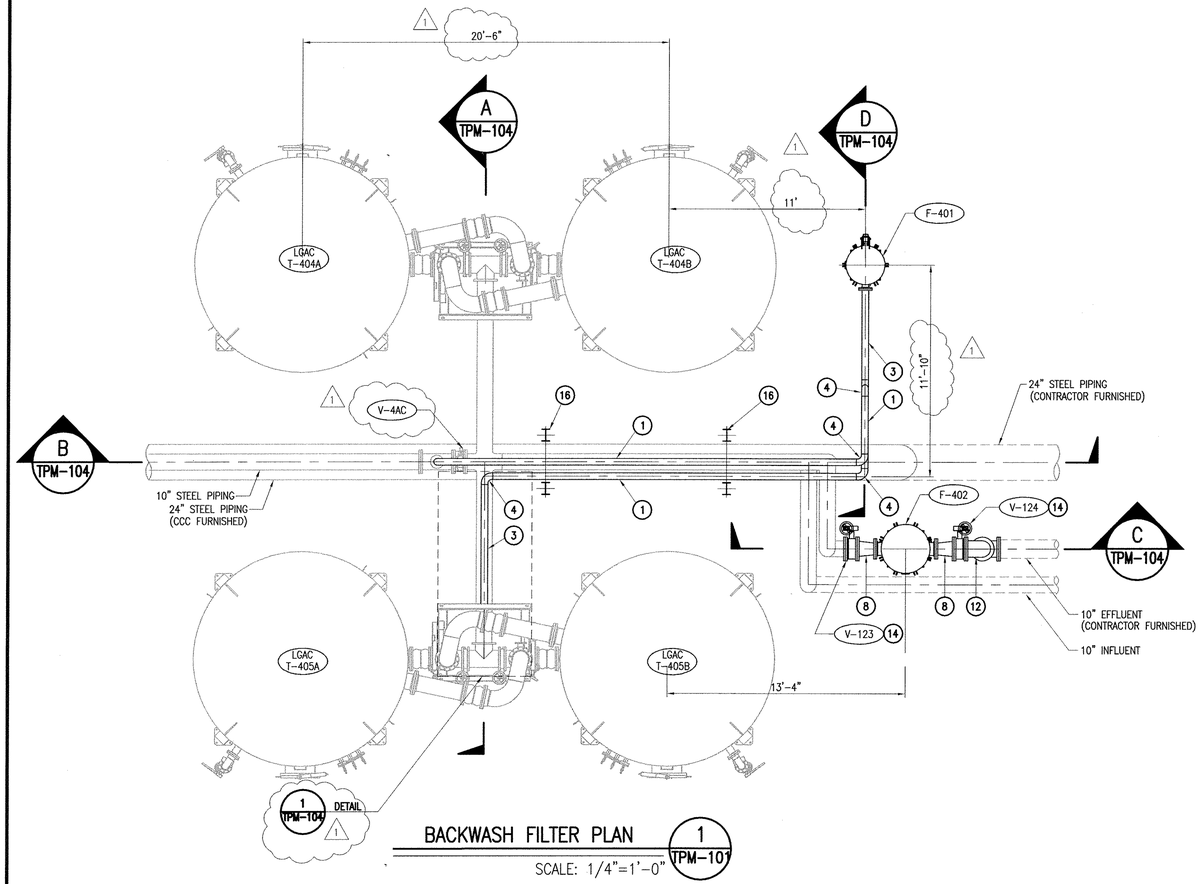


BACKWASH FILTER PLAN (1 TPM-101)
SCALE: 1/4"=1'-0"

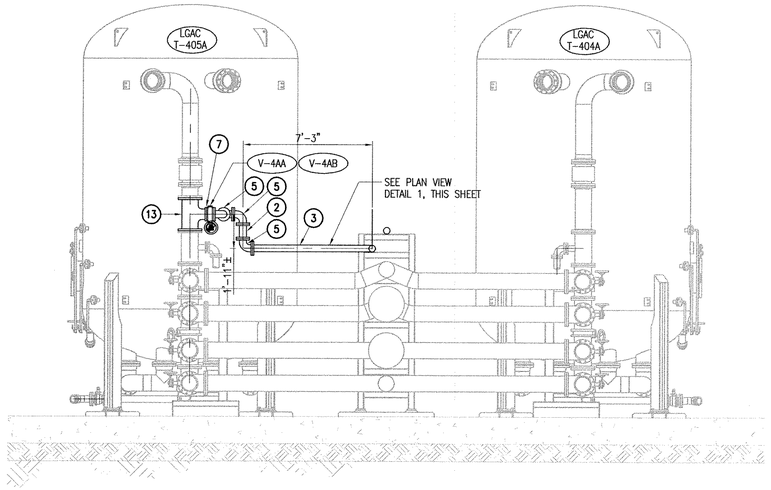


SECTION (A TPM-104)
SCALE: 1/4"=1'-0"

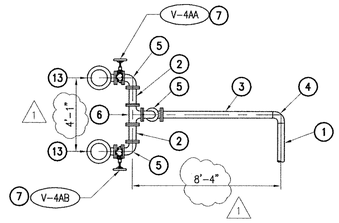


DETAIL (1 TPM-104)
SCALE: 1/4"=1'-0"

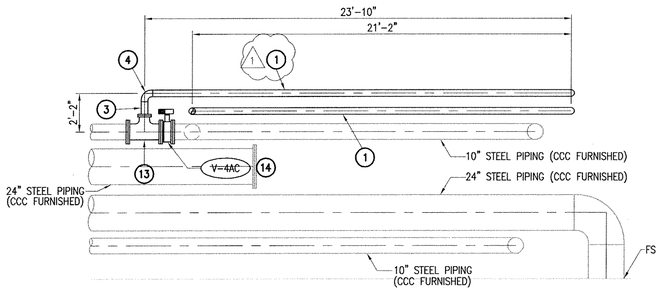


SECTION (B TPM-104)
SCALE: 1/4"=1'-0"

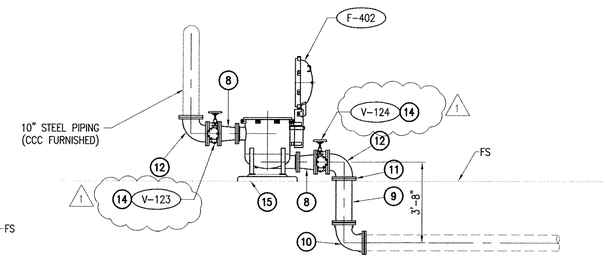


SECTION (C TPM-104)
SCALE: 1/4"=1'-0"

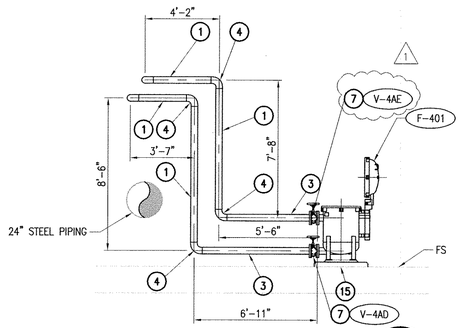


SECTION (D TPM-104)
SCALE: 1/4"=1'-0"

TPM-104

| REVISION | | |
|---|---|---|
| NO. | DESCRIPTION | DATE |
| 1 | BUILDING DEPARTMENT PLAN CHECK COMMENTS | 01/05/09 |

REGISTERED PROFESSIONAL ENGINEER CHRISTOPHER SHEM HAWES 69578 CIVIL STATE OF CALIFORNIA 6/30/2010

APPROVED BY: CHRISTOPHER SHEM HAWES RCE 69578 — 2/25/08 DATE
APPROVED: — DATE
APPROVED: — DATE

PLANS PREPARED BY:
CIVILTEC engineering inc.
*General Civil, Municipal, Water and Wastewater Engineering, Planning, Construction Management and Surveying*
118 West Lime Avenue
Monrovia, Ca. 91016
Phone: (626) 357-0588
Fax: (626) 303-7957

Battelle
*The Business of Innovation*

CITY OF PASADENA INCORPORATED JUNE 1886

D.S.-209 & 210A

| | | |
|---|---|---|
| DATE: FEBRUARY 2009 | SCALE: AS SHOWN | PASADENA WATER & POWER, CITY OF PASADENA |
| DRAWN BY: CIVILTEC | | MONK HILL TREATMENT SYSTEM BACKWASH FILTER |
| DESIGNED BY: CIVILTEC | | |
| CHECKED BY: CIVILTEC | | |
| SUBMITTED BY: CIVILTEC | | |
| FIELD BOOKS | CALC BOOKS | APPROVED / APPROVED |

SHEET NO 29 OF 79 SHEETS
WORK ORDER 02557
FILE NUMBER E-1670
REVISION

X:\20070\27140-@_MONKHILL TREATMENT PLANT\DWG\SUBMITTALS\FINAL SUBMITTALS\TPM-104.DWG (02-26-09 2:38:36PM)

SCALE 1"=20'

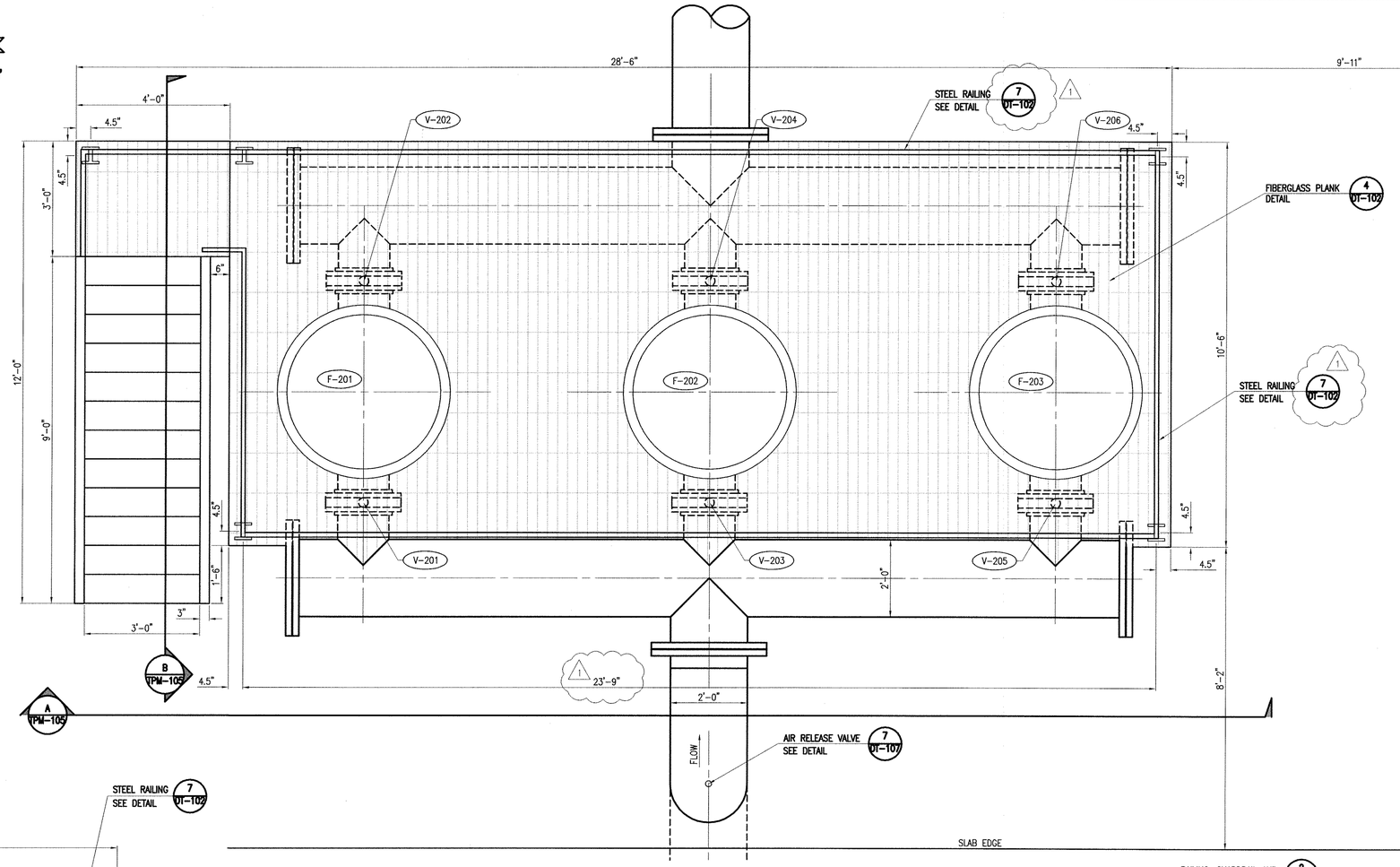


ALL FILTER PLATFORM EQUIPMENT CCC FURNISHED & DESIGNED

1"=20' SCALE

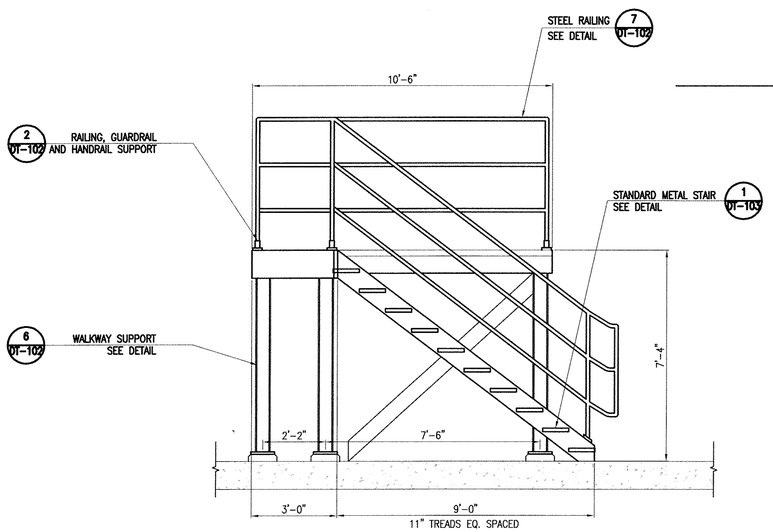


SECTION B TPM-105

1"=30' SCALE

* FILTERS NOT SHOWN FOR CLARITY

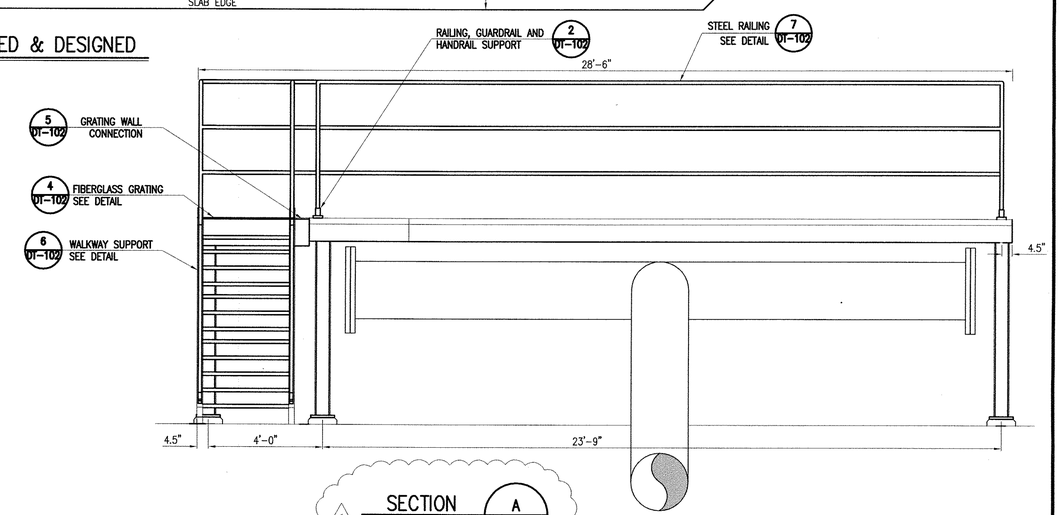


SECTION A TPM-105

1"=30' SCALE

TPM-105

| REVISION | | |
|---|---|---|
| NO. | DESCRIPTION | DATE |
| 1 | BUILDING DEPARTMENT PLAN CHECK COMMENTS | 01/05/09 |

REGISTERED PROFESSIONAL ENGINEER CHRISTOPHER SHEM HAWES 69578 6/30/2010 CIVIL STATE OF CALIFORNIA

APPROVED BY: CHRISTOPHER SHEM HAWES RCE 69578 — DATE 2/25/08

APPROVED: — DATE

APPROVED: — DATE

PLANS PREPARED BY:

CIVILTEC engineering inc.

*General Civil, Municipal, Water and Wastewater Engineering, Planning, Construction Management and Surveying*

118 West Lime Avenue
Monrovia, Ca. 91016
Phone: (626) 357-0588
Fax: (626) 303-7957

Battelle
*The Business of Innovation*

CITY OF PASADENA INCORPORATED JUNE 1886

D.S.-209 & 210A

| | | | |
|---|---|---|---|
| DATE FEBRUARY 2009 | SCALE AS SHOWN | PASADENA WATER & POWER CITY OF PASADENA | SHEET NO 30 OF 79 SHEETS |
| DRAWN BY CIVILTEC / DESIGNED BY CIVILTEC / CHECKED BY CIVILTEC / SUBMITTED BY CIVILTEC | | MONK HILL TREATMENT SYSTEM STAIRS, GUARDRAIL & HANDRAIL PLAN | WORK ORDER 02557 / FILE NUMBER E-1670 |
| FIELD BOOKS | CALC BOOKS | APPROVED / APPROVED | REVISION |

X:\2007\27140-JR_MONKHILL TREATMENT PLANT\DWG\SUBMITTALS\FINAL SUBMITTAL\27140-TPM-105.DWG (02-25-09 2:39:02PM)

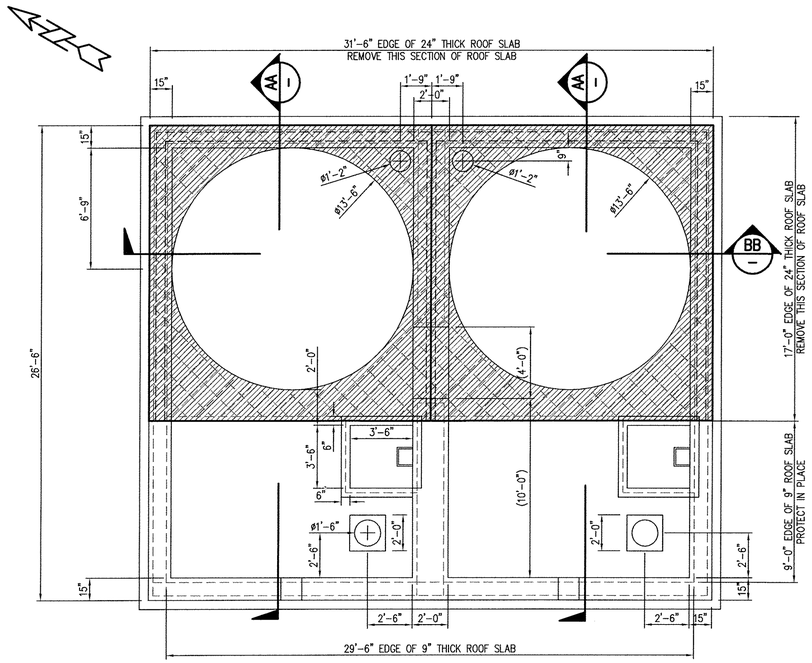


## EXISTING SUMP STRUCTURE

SCALE: 1/4"=1'-0"

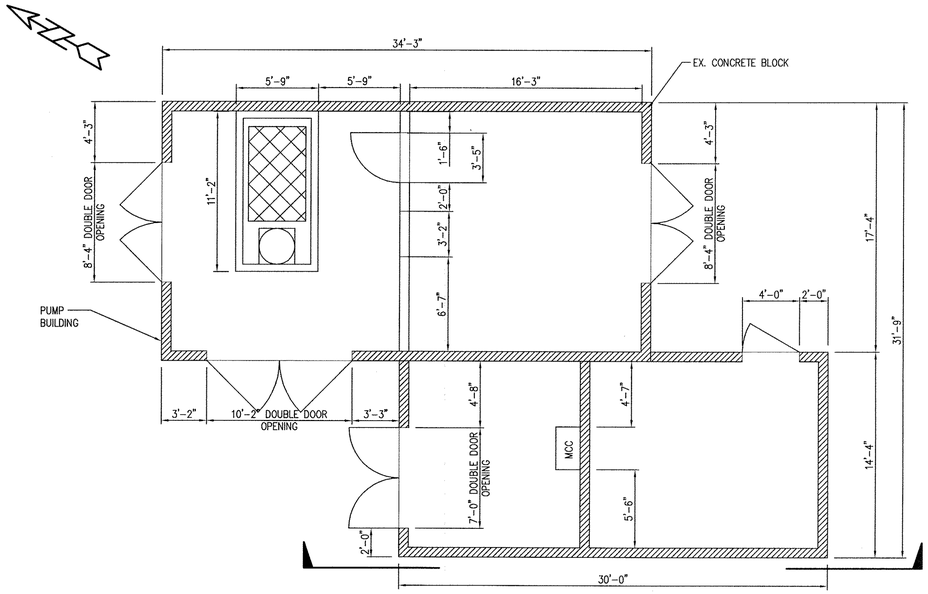


***SEE ELECTRICAL PLANS FOR DETAILS. WELL HEAD IMPROVEMENTS TO BE PERFORMED BY OTHERS.

## EXISTING WELL BUILDING PLAN

SCALE: 1"=5'-0"

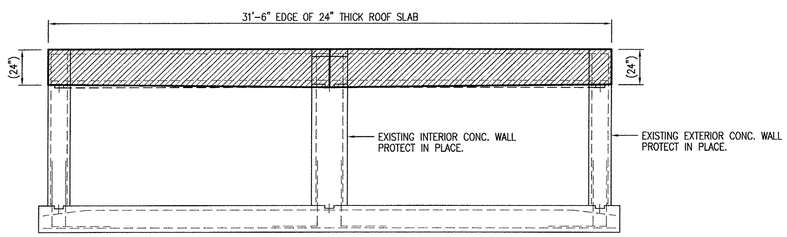


SECTION BB
SCALE: 1/4"=1'-0"

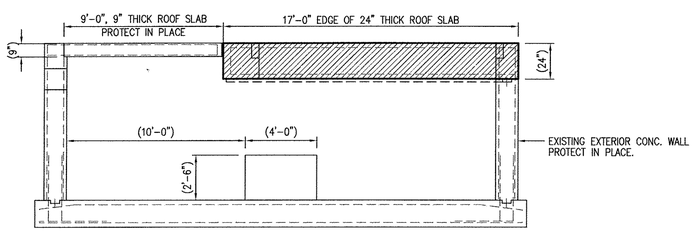


SECTION AA
SCALE: 1/4"=1'-0"

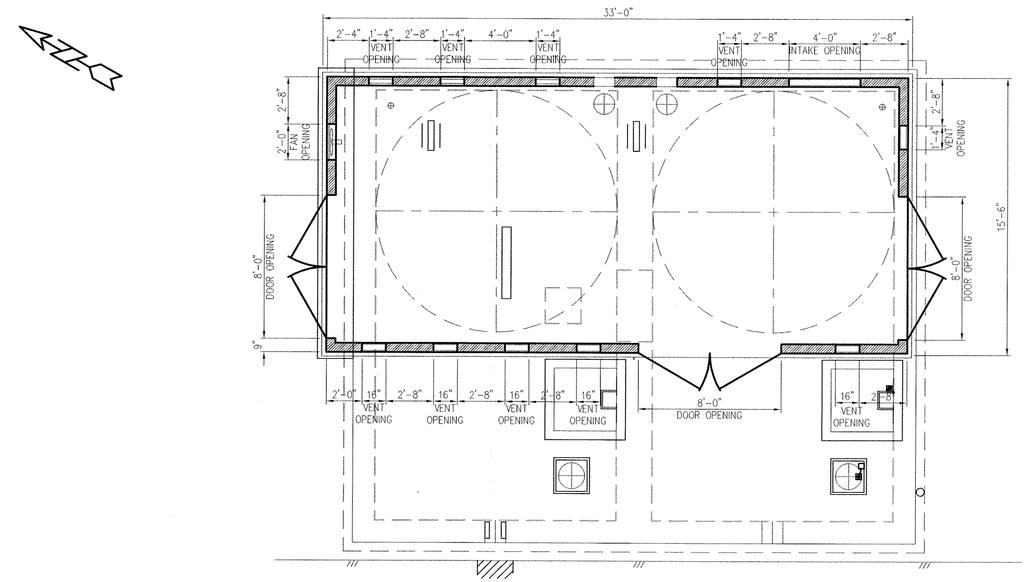


## NEW BUILDING WALL OPENINGS

SCALE: 1/4"=1'-0"

VWA-101

| REVISION | | |
|---|---|---|
| NO. | DESCRIPTION | DATE |
| | | |
| | | |
| | | |
| | | |

REGISTERED PROFESSIONAL ENGINEER CHRISTOPHER SHEM HAWES 69578 6/30/2010 CIVIL STATE OF CALIFORNIA

APPROVED BY: C. Shem Hawes 69578 — CHRISTOPHER SHEM HAWES RCE — 2/25/08 DATE
APPROVED: _____ DATE
APPROVED: _____ DATE

PLANS PREPARED BY:

CIVILTEC engineering inc.

*General Civil, Municipal, Water and Wastewater Engineering, Planning, Construction Management and Surveying*

118 West Lime Avenue
Monrovia, Ca. 91016
Phone: (626) 357-0588
Fax: (626) 303-7957

Battelle
*The Business of Innovation*

CITY OF PASADENA INCORPORATED JUNE 1886

D.S.-209 & 210A

| | | | |
|---|---|---|---|
| DATE: FEBRUARY 2009 | SCALE: AS SHOWN | PASADENA WATER & POWER<br>CITY OF PASADENA | SHEET NO 31 OF 79 SHEETS |
| DRAWN BY CIVILTEC<br>DESIGNED BY CIVILTEC<br>CHECKED BY CIVILTEC<br>SUBMITTED BY CIVILTEC | | MONK HILL TREATMENT SYSTEM<br>VENTURA WELL ARCHITECTURAL PLAN | WORK ORDER 02557 / FILE NUMBER E-1670 |
| FIELD BOOKS | CALC BOOKS | APPROVED / APPROVED | REVISION |

X:\2007\27140-PL MONKHILL TREATMENT PLANT\DWG\SUBMITTALS\FINAL SUBMITTAL\27140-VWA-101.DWG (02-25-09 2:39:54PM)

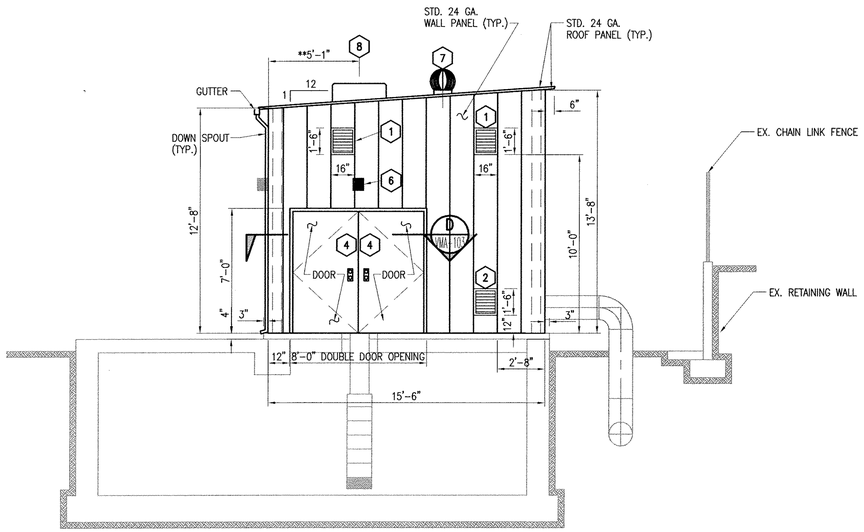


## SOUTH ELEVATION
SCALE: 1/4"=1'-0"

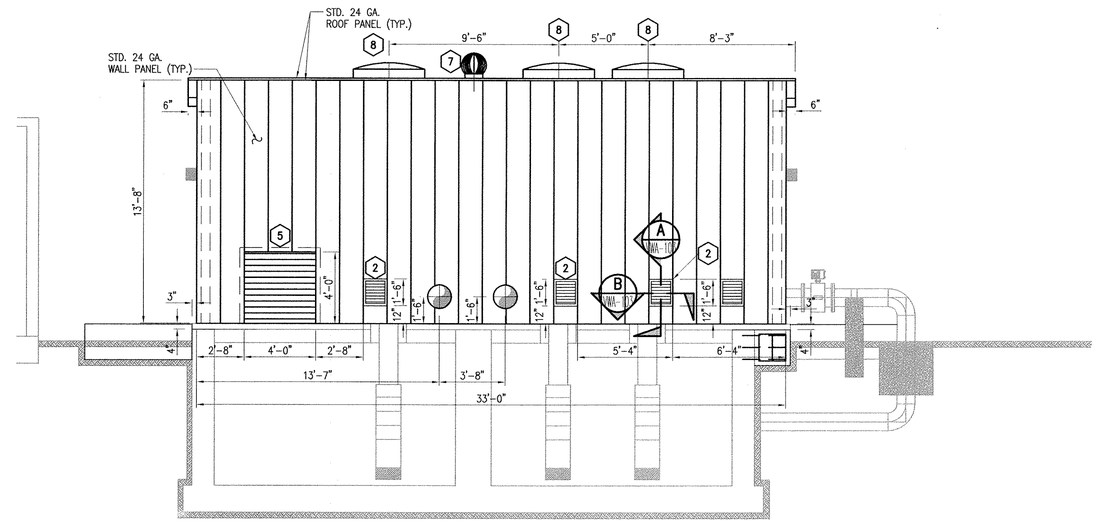


## EAST ELEVATION
SCALE: 1/4"=1'-0"

## LEGEND

1. 16"x18" HIGH FIXED BLADE LOUVER WITH INSECT SCREEN WITH BOTTOM AT FINISHED FLOOR +10'-0" (TYPICAL OF 2).
2. 16" WIDEx18" HIGH FIXED BLADE LOUVER WITH INSECT SCREEN WITH BOTTOM AT FINISHED FLOOR +1'-0" (TYPICAL).
3. WALL EXHAUST FAN UNIT WITH 24" SQ. DAMPER AND INSECT SCREEN WITH TOP AT FINISHED FLOOR +9'-0" (TYPICAL OF 1).
4. 4'-0"x7'-0" FULL FLUSH SOLID CORE, METAL DOOR FRAME, HARDWARE INCLUDES BALL BEARING HINGES, MORTISED LOCKSET, ALUMINUM THRESHOLD & WEATHERSTRIPING (TYPICAL OF 6). LOCKSET SHALL BE CENTERED BETWEEN 30 AND 44 INCHES ABOVE FLOOR AND LEVEL TYPE. 1
5. INTAKE 48" SQUARE LOUVERS WITH DAMPER AND INSECT SCREEN AT FINISHED FLOOR +0'-0" (TYPICAL OF 1).
6. WALL MOUNTED EXTERIOR LIGHT, SEE ELECTRICAL PLANS FOR MAKE AND MODEL.
7. ROOF MOUNTED GRAVITY TURBINE VENTILATOR.
8. 4' SQUARE ROOF MOUNTED HATCH COVER PER BUILDING MANUFACTURER'S APPROVAL.

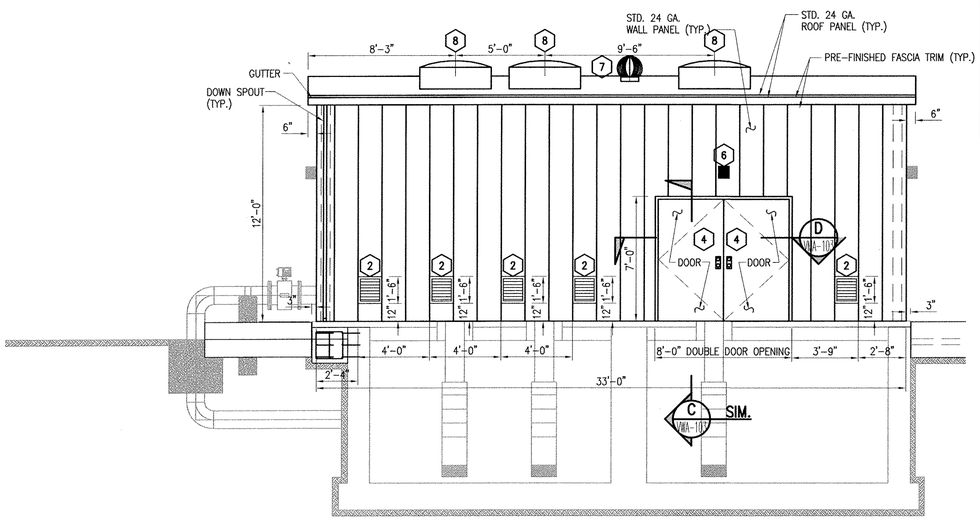


## WEST ELEVATION
SCALE: 1/4"=1'-0"

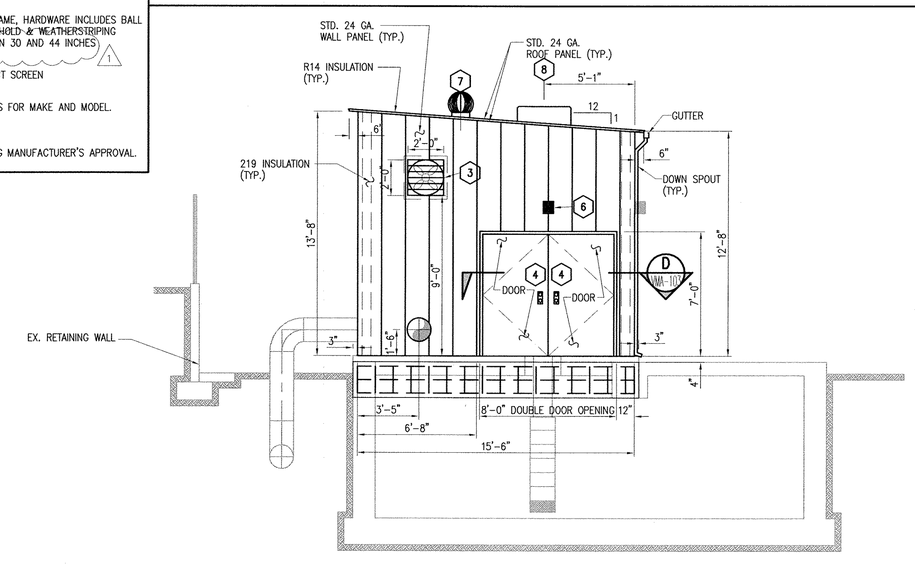


## NORTH ELEVATION
SCALE: 1/4"=1'-0"

VWA-102

| REVISION | | |
|---|---|---|
| NO. | DESCRIPTION | DATE |
| 1 | BUILDING DEPARTMENT PLAN CHECK COMMENTS | 01/05/09 |

REGISTERED PROFESSIONAL ENGINEER CHRISTOPHER SHEM HAWES 69578 CIVIL STATE OF CALIFORNIA 4/30/2010

APPROVED BY: C. Shem Hawes 69578 CHRISTOPHER SHEM HAWES RCE — DATE 2/25/08
APPROVED: — DATE
APPROVED: — DATE

PLANS PREPARED BY:
CIVILTEC engineering inc.
*General Civil, Municipal, Water and Wastewater Engineering, Planning, Construction Management and Surveying*
118 West Lime Avenue
Monrovia, Ca. 91016
Phone: (626) 357-0588
Fax: (626) 303-7957

Battelle
*The Business of Innovation*

CITY OF PASADENA INCORPORATED JUNE 1886

D.S.-209 & 210A

| DATE | SCALE | PASADENA WATER & POWER CITY OF PASADENA | SHEET NO 32 OF 79 SHEETS |
|---|---|---|---|
| FEBRUARY 2009 | AS SHOWN | | |
| DRAWN BY CIVILTEC | | MONK HILL TREATMENT SYSTEM | WORK ORDER 02557 / FILE NUMBER E-1670 |
| DESIGNED BY CIVILTEC | | VENTURA WELL ARCHITECTURAL ELEVATIONS | |
| CHECKED BY CIVILTEC | | | |
| SUBMITTED BY CIVILTEC | | | |
| FIELD BOOKS | CALC BOOKS | APPROVED / APPROVED | REVISION |

A:\2007\27140-PW MONHILL TREATMENT PLANT\TWO\SUBMITTALS\FINAL SUBMITTAL\27140-VWA-102.DWG (02-27-09 8:58:22AM)

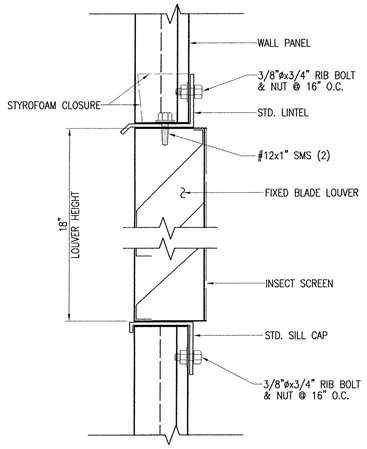


SECTION A
SCALE: 3"=1'-0" VWA-102

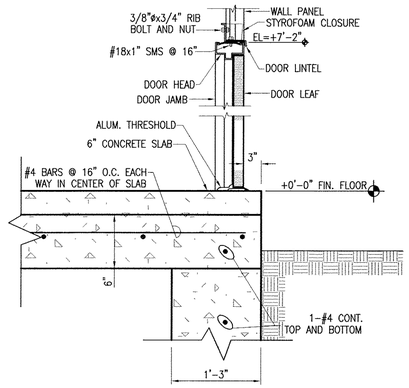


SECTION C
SCALE: 1"=1'-0" VWA-102

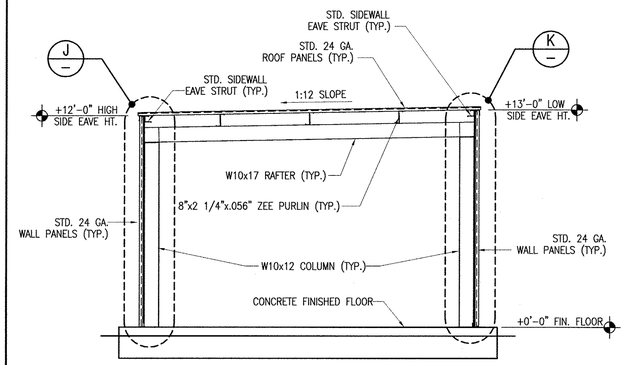


PUMP STATION FIXED BUILDING SECTION 1
SCALE: 1/4" = 1'-0" VWA-104

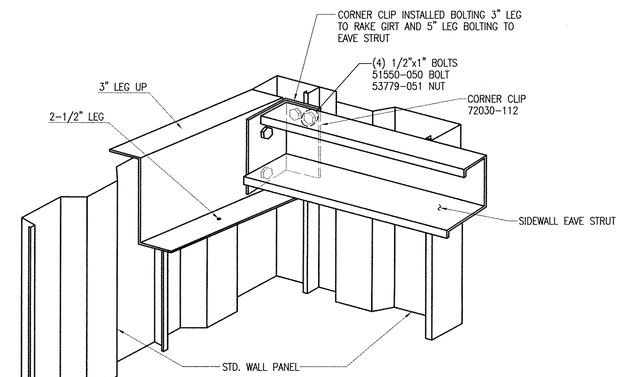


DETAIL 2
NOT TO SCALE

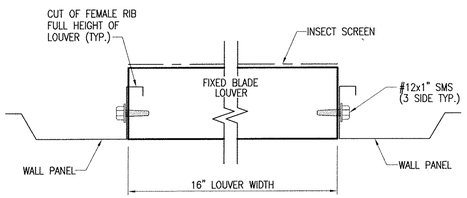


SECTION B
SCALE: 3"=1'-0" VWA-102

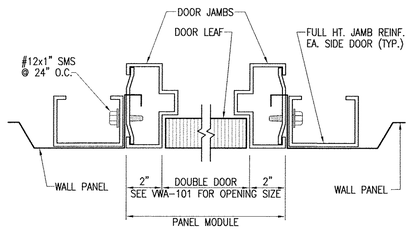


SECTION D
SCALE: 3"=1'-0" VWA-102

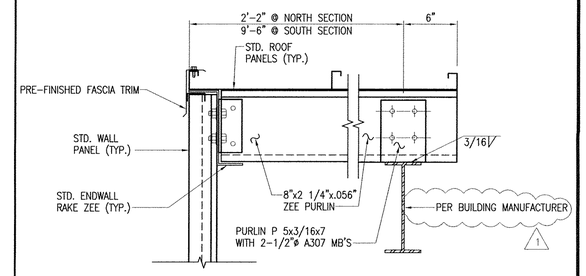


SECTION H
SCALE: 1 1/2" = 1'-0"

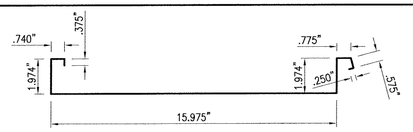


DESIGN THICKNESS=0.022" / WT.=1.31 PSF/ Fy=50KSI
TOP IN COMPRESSION-Ix=0.1658 $IN^4$/FT.; Sx=0.0963 $IN^3$/FT.; Ma=2.8828 IN-KIP/FT.
BOT. IN COMPRESSION-Ix=0.7280 $IN^4$/FT.; Sx=0.0584 $IN^3$/FT.; Ma=1.7469 IN-KIP/FT.

STANDARD ROOF PANEL
SCALE: 3"=1'-0"

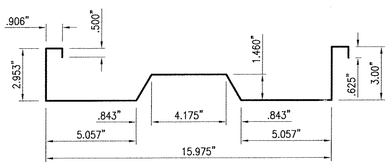


DESIGN THICKNESS=0.022" / WT.=1.52 PSF/ Fy=50KSI
FACE IN COMPRESSION-Ix=0.2910 $IN^4$/FT.; Sx=0.1658 $IN^3$/FT.; Ma=4.9636 IN-KIP/FT.
RIBS IN COMPRESSION-Ix=0.3813 $IN^4$/FT.; Sx=0.1499 $IN^3$/FT.; Ma=4.4881 IN-KIP/FT.

STANDARD WALL PANEL
SCALE: 3"=1'-0"

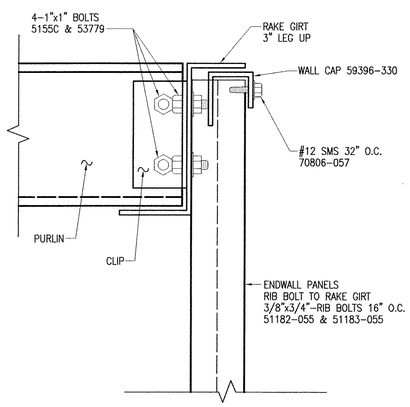


SECTION E
NOT TO SCALE

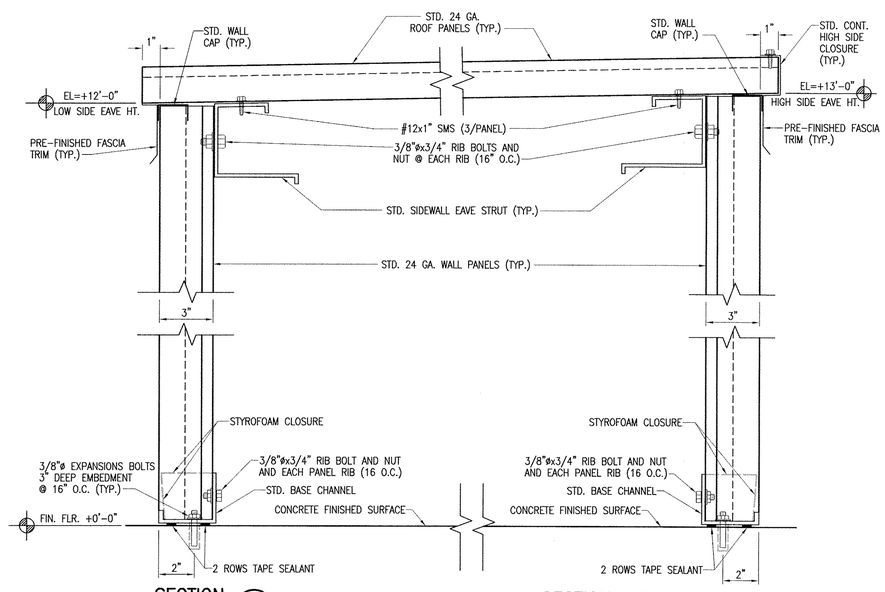


SECTION J
SCALE: 3"=1'-0"

SECTION K
SCALE: 3"=1'-0"

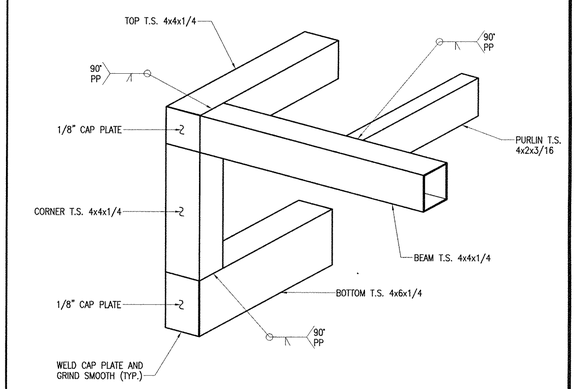


DETAIL 1
NOT TO SCALE

VWA-103

H:\2007\27140-PL MONRAIL TREATMENT PLANT\DWG\SUBMITTALS\FINAL SUBMITTAL\27140-VWA-103.DWG (02-27-09 8:29:37AM)

REVISION

| NO. | DESCRIPTION | DATE |
|---|---|---|
| 1 | BUILDING DEPARTMENT PLAN CHECK COMMENTS | 01/05/09 |
| | | |
| | | |
| | | |

REGISTERED PROFESSIONAL ENGINEER CHRISTOPHER SHEM HAWES 69578 6/30/2010 CIVIL STATE OF CALIFORNIA

APPROVED BY: C. Shem Hawes 69578 2/25/08
CHRISTOPHER SHEM HAWES RCE DATE
APPROVED: DATE
APPROVED: DATE

PLANS PREPARED BY:
CIVILTEC engineering inc.
*General Civil, Municipal, Water and Wastewater Engineering, Planning, Construction Management and Surveying*
118 West Lime Avenue
Monrovia, Ca. 91016
Phone: (626) 357-0588
Fax: (626) 303-7957

Battelle
*The Business of Innovation*

CITY OF PASADENA INCORPORATED JUNE 1886

D.S.-209 & 210A

| | | | |
|---|---|---|---|
| DATE FEBRUARY 2009 | SCALE AS SHOWN | PASADENA WATER & POWER CITY OF PASADENA | SHEET NO 33 OF 79 SHEETS |
| DRAWN BY CIVILTEC; DESIGNED BY CIVILTEC; CHECKED BY CIVILTEC; SUBMITTED BY CIVILTEC | | MONK HILL TREATMENT SYSTEM VENTURA WELL ARCHITECTURAL BUILDING SECTIONS | WORK ORDER 02557 / FILE NUMBER E-1670 |
| FIELD BOOKS | CALC BOOKS | APPROVED / APPROVED | REVISION |

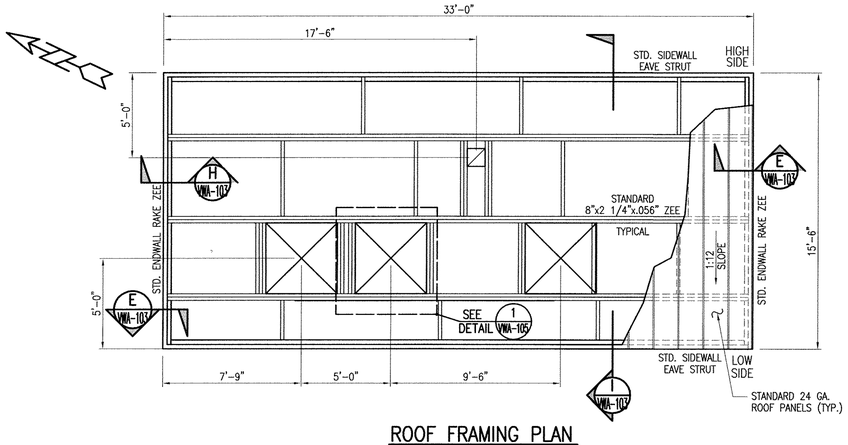


## ROOF FRAMING PLAN

SCALE: 1/4" = 1'-0"

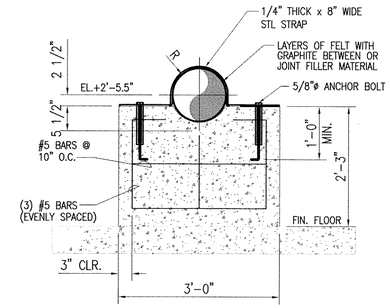


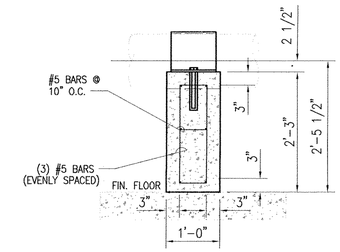


## CONC. PIPE SUPPORT DETAIL 5

SCALE: 3/4" = 1'-0"

VMS-102

## NOT USED 1

NOT TO SCALE

## NOT USED 2

NOT TO SCALE

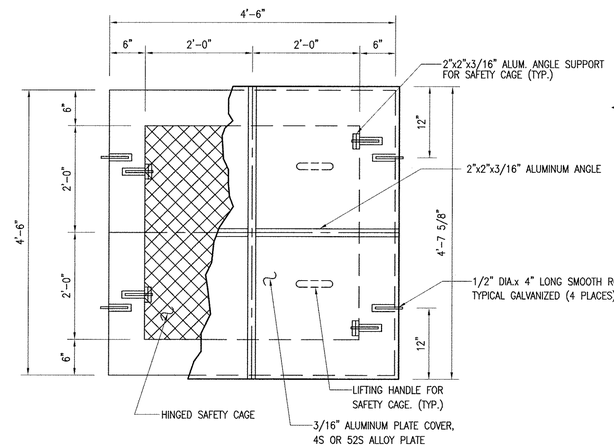


## PLAN VIEW

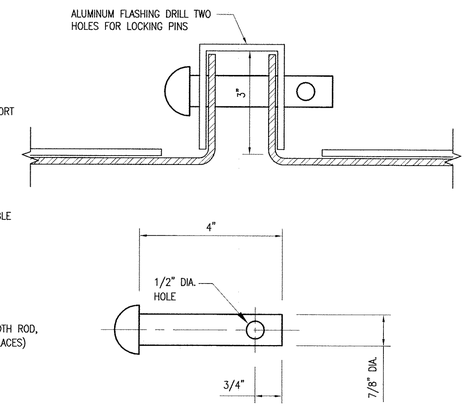


## LOCKING PIN DETAIL

NOT TO SCALE

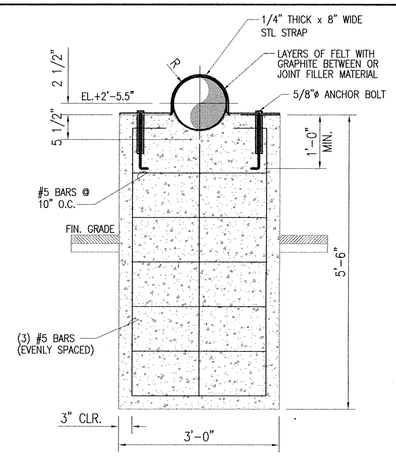


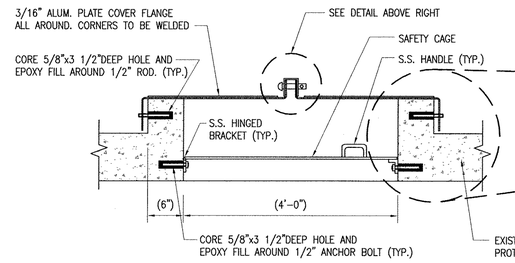


## SECTION

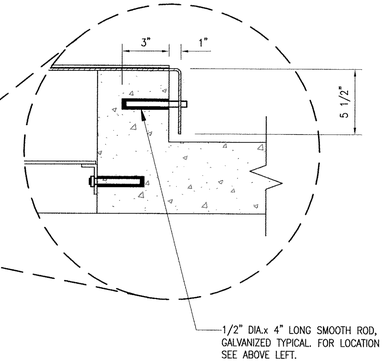


## SUMP ACCESS COVER DETAIL 3

SCALE: 1/2"=1'-0"

VMS-101

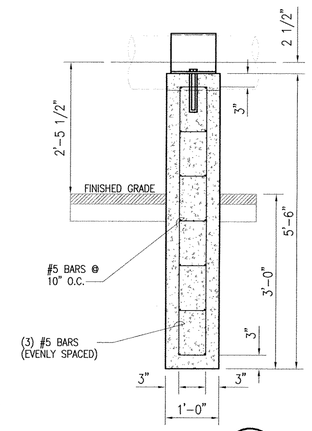


## CONC. PIPE SUPPORT DETAIL 4

SCALE: 3/4" = 1'-0"

VMS-102

VWA-104

| REVISION | | |
|---|---|---|
| NO. | DESCRIPTION | DATE |
| | | |

REGISTERED PROFESSIONAL ENGINEER CHRISTOPHER SHEM HAWES 69578 6/30/2010 CIVIL STATE OF CALIFORNIA

APPROVED BY: C. Shem Hawes 69578 CHRISTOPHER SHEM HAWES RCE — 2/25/08 DATE

APPROVED: _____ DATE

APPROVED: _____ DATE

PLANS PREPARED BY:

CIVILTEC engineering inc.

*General Civil, Municipal, Water and Wastewater Engineering, Planning, Construction Management and Surveying*

118 West Lime Avenue
Monrovia, Ca. 91016
Phone: (626) 357-0588
Fax: (626) 303-7957

Battelle
*The Business of Innovation*

CITY OF PASADENA INCORPORATED JUNE 1886

D.S.-209 & 210A

| DATE | SCALE | PASADENA WATER & POWER CITY OF PASADENA | SHEET NO 34 OF 79 SHEETS |
|---|---|---|---|
| FEBRUARY 2009 | AS SHOWN | | |
| DRAWN BY CIVILTEC | | MONK HILL TREATMENT SYSTEM VENTURA WELL STRUCTURAL BUILDING DETAILS | WORK ORDER 02557 / FILE NUMBER E-1670 |
| DESIGNED BY CIVILTEC | | | |
| CHECKED BY CIVILTEC | | | |
| SUBMITTED BY CIVILTEC | | | |
| FIELD BOOKS | CALC BOOKS | APPROVED / APPROVED | REVISION |

X:\2007\27140-JR_MONKHILL TREATMENT PLANT\DWG\SUBMITTALS\FINAL SUBMITTAL\27140-VWA-104.DWG (02-27-09 9:00:19AM)

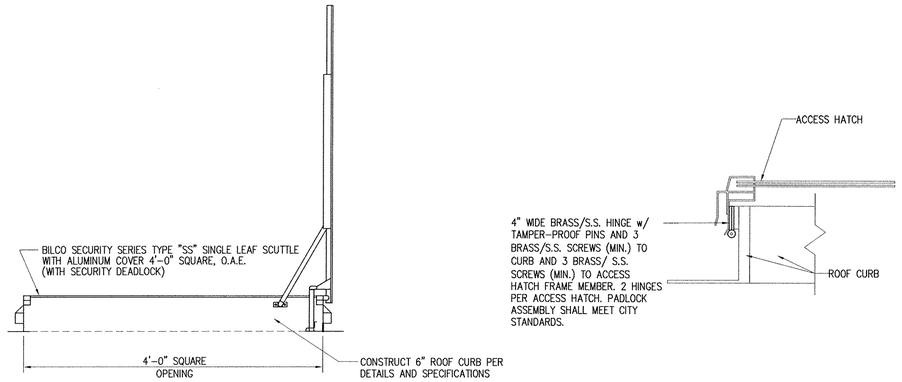





## ROOF HATCH DETAIL (1 / VWA-104)

SCALE: NTS

* SHOWN IN INSTALLED POSITION. INSTALL AFTER ROOF PANELS AND DURING FASTENER INSTALLATION.

NOTE: ROOF CURBS ARE TO BE FIELD LOCATED AND CUT.

ROOF CURBS MUST BE INSTALLED DURING ROOF ERECTION.

ROOF CURB FRAMING MUST BE INSTALLED PRIOR TO METAL CEILING INSTALLATION WHEN REQUIRED. SEE DRAWING CURB-SC FOR ADDITIONAL DETAILS.

NOTE: PREPUNCHED HOLES IN HANGER ARE FOR ATTACHMENT OF HANGER TO WALL CAP ONLY. DO NOT USE FOR PURLIN CLIP ATTACHMENT.

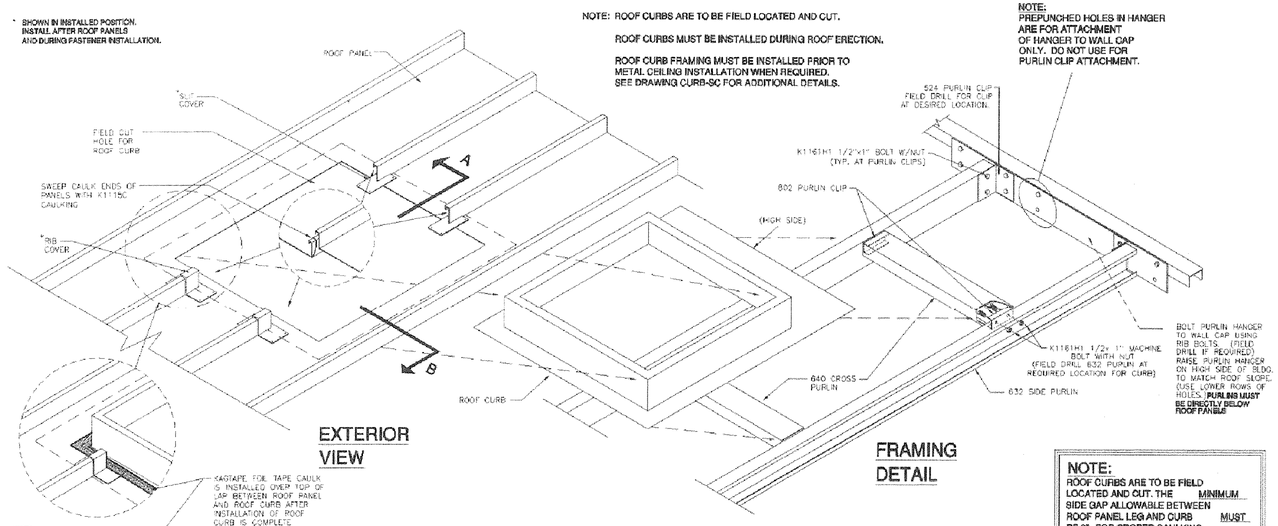


EXTERIOR VIEW

FRAMING DETAIL

**NOTE:**
ROOF CURBS ARE TO BE FIELD LOCATED AND CUT. THE MINIMUM SIDE GAP ALLOWABLE BETWEEN ROOF PANEL LEG AND CURB MUST BE 6" FOR PROPER CAULKING.

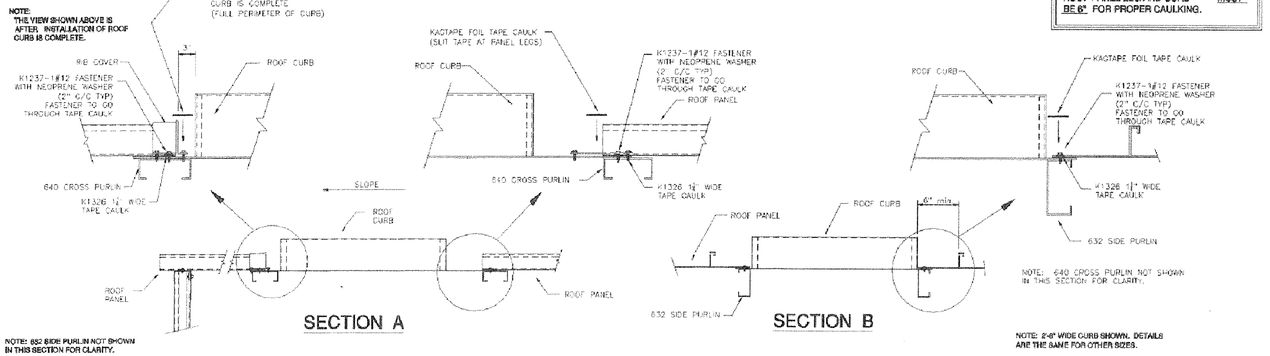


NOTE: THE VIEW SHOWN ABOVE IS AFTER INSTALLATION OF ROOF CURB IS COMPLETE.

SECTION A

SECTION B

NOTE: 632 SIDE PURLIN NOT SHOWN IN THIS SECTION FOR CLARITY.

NOTE: 2'-6" WIDE CURB SHOWN. DETAILS ARE THE SAME FOR OTHER SIZES.

VWA-105

| REVISION | | |
|---|---|---|
| NO. | DESCRIPTION | DATE |
| | | |
| | | |
| | | |
| | | |

REGISTERED PROFESSIONAL ENGINEER — CHRISTOPHER SHEM HAWES — 69578 — 6/30/2010 — CIVIL — STATE OF CALIFORNIA

APPROVED BY: C. Shem Hawes 69578 — CHRISTOPHER SHEM HAWES RCE — DATE 2/25/08
APPROVED: — DATE
APPROVED: — DATE

PLANS PREPARED BY:
CIVILTEC engineering inc.
*General Civil, Municipal, Water and Wastewater Engineering, Planning, Construction Management and Surveying*
118 West Lime Avenue
Monrovia, Ca. 91016
Phone: (626) 357-0588
Fax: (626) 303-7957

Battelle — The Business of Innovation

CITY OF PASADENA — INCORPORATED JUNE, 1886

D.S.-209 & 210A

| | | | |
|---|---|---|---|
| DATE FEBRUARY 2009 | SCALE AS SHOWN | PASADENA WATER & POWER CITY OF PASADENA | SHEET NO 35 OF 79 SHEETS |
| DRAWN BY CIVILTEC; DESIGNED BY CIVILTEC; CHECKED BY CIVILTEC; SUBMITTED BY CIVILTEC | | MONK HILL TREATMENT SYSTEM VENTURA WELL ARCHITECTURAL DETAILS | WORK ORDER 02557 / FILE NUMBER E-1670 |
| FIELD BOOKS | CALC BOOKS | APPROVED / APPROVED | REVISION |

K:\2007\27140-JR, MONHILL TREATMENT PLANT\DWG\SUBMITTALS\FINAL SUBMITTAL\27140-VWA-105.DWG (02-27-09 9:00:50AM)

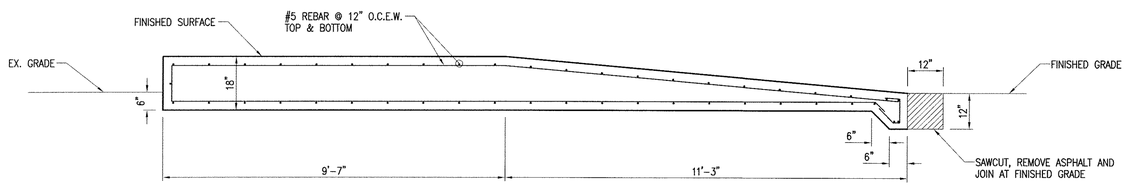


SECTION A/–
SCALE: 1/2"=1'-0"

SCALE 1/4"=1'-0"

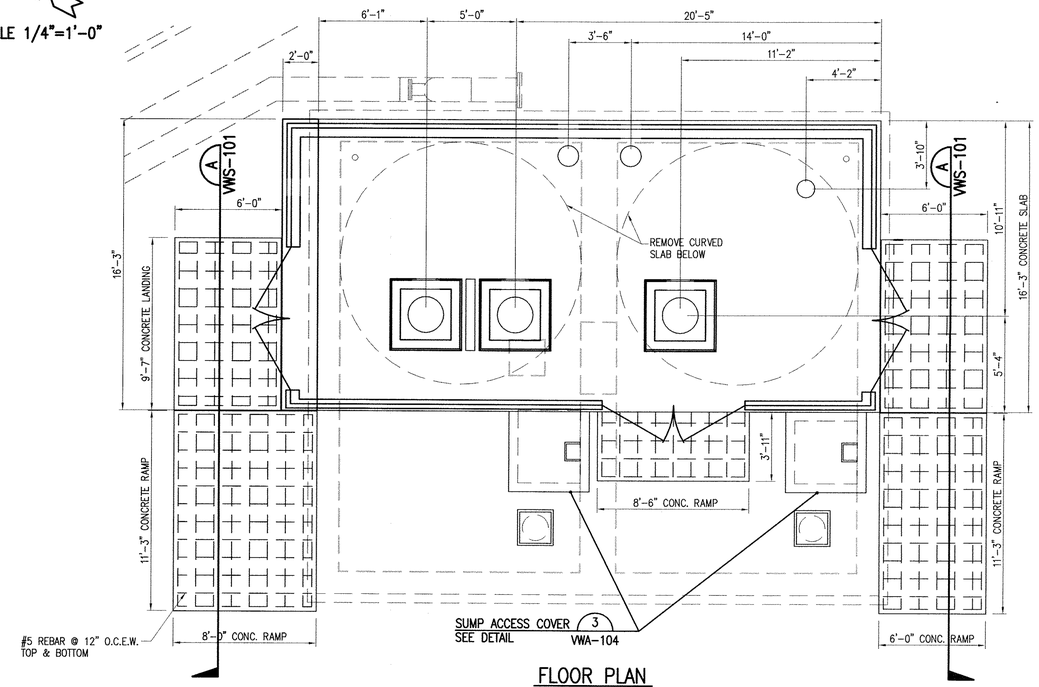


FLOOR PLAN
SCALE: 1/4"=1'-0"

SCALE 1/4"=1'-0"

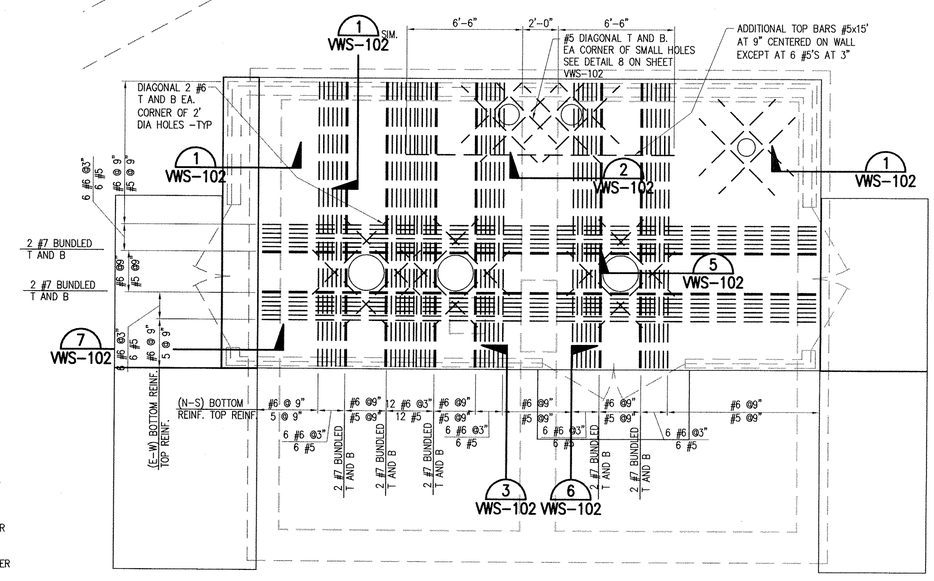


## CONCRETE SLAB NOTES

1. REINFORCEMENT PLACEMENT
   a. BOTTOM BARS:
   -PLACE N-S BARS AT BOTTOM LAYER
   -PLACE E-W BARS AT TOP LAYER
   b. TOP BARS:
   -PLACE E-W BARS AT BOTTOM LAYER
   -PLACE N-S BARS AT TOP LAYER
2. SPLICES IN SLAB REINF. ARE PERMITTED ONLY AS FOLLOWS:
   a. BOTTOM BARS; OVER THE CENTER WALL
   b. TOP BARS; AT MID-SPAN

SLAB REINFORCEMENT
SCALE: 1/4"=1'-0"

VWS-101

| REVISION | | |
|---|---|---|
| NO. | DESCRIPTION | DATE |
| | | |
| | | |
| | | |

REGISTERED PROFESSIONAL ENGINEER
CHRISTOPHER SHEM HAWES
69578
6/30/2010
CIVIL
STATE OF CALIFORNIA

APPROVED BY:
C. Shem Hawes 69578 2/25/08
CHRISTOPHER SHEM HAWES RCE DATE
APPROVED: DATE
APPROVED: DATE

PLANS PREPARED BY:
CIVILTEC engineering inc.
*General Civil, Municipal, Water and Wastewater Engineering, Planning, Construction Management and Surveying*
118 West Lime Avenue
Monrovia, Ca. 91016
Phone: (626) 357-0588
Fax: (626) 303-7957

Battelle
*The Business of Innovation*

CITY OF PASADENA INCORPORATED JUNE 1886

D.S.-209 & 210A

| DATE | SCALE | PASADENA WATER & POWER CITY OF PASADENA | SHEET NO 36 OF 79 SHEETS |
|---|---|---|---|
| FEBRUARY 2009 | AS SHOWN | | |
| DRAWN BY CIVILTEC | | MONK HILL TREATMENT SYSTEM | WORK ORDER 02557 / FILE NUMBER E-1670 |
| DESIGNED BY CIVILTEC | | VENTURA WELL STRUCTURAL PLAN | |
| CHECKED BY CIVILTEC | | | |
| SUBMITTED BY CIVILTEC | | | |
| FIELD BOOKS / CALC BOOKS | | APPROVED / APPROVED | REVISION |

X:\2007\2714D-JPL MONKHILL TREATMENT PLANT\DWG\SUBMITTAL\SUBMITTAL5\FINAL SUBMITTAL\2714D-VWS-101.DWG (02-27-09 9:02:36AM)

NOTES:
1. REMOVE EXISTING CONCRETE UP TO CONSTRUCTION JOINT AND KEY AND EXPOSE EXISTING REBAR. DO NOT CUT EX. VERTICAL REINF.
2. ROUGHEN SURFACE TO 1/4 IN. AMPLITUDE. TYP. FOR ALL SURFACES TO RECEIVE NEW CONCRETE.
3. SHORE EDGES OF CONCRETE CURVE PRIOR TO CONCRETE REMOVAL.
4. DRILL 6" DEEP AND INSERT DOWEL WITH EPOXY. PRIOR TO DRILLING, DETECT AND MARK EXISTING REINFORCING AND DRILL MIN. 1" CLEAR OF REINF. ALL DRILLING AND ANCHOR INSTALLATION SHALL BE ACCORDING TO EPOXY ESR- APPROVAL REPORT AND REQUIRES DEPUTY INSPECTION.
5. 3/4" ADEKA ULTRA-SEAL MC-2010 MN
6. CORE 2" DIA. AND CHIP OUT CONC. REMOVE EXISTING REINF. TO 2" BELOW SURFACE. LAMINATE HOLE W/ POLYMER BONDING AGENT AND DRY-PACK THE HOLE FLUSH. "SEE REINF." CAP DETAIL.

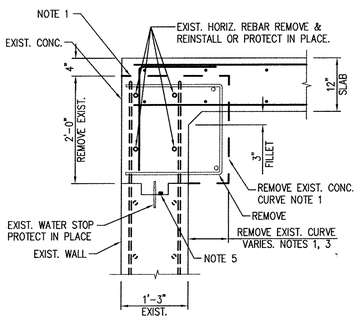


SECTION AT EXTERIOR WALL (1) VWS-101
SCALE: 3/4"=1'-0"

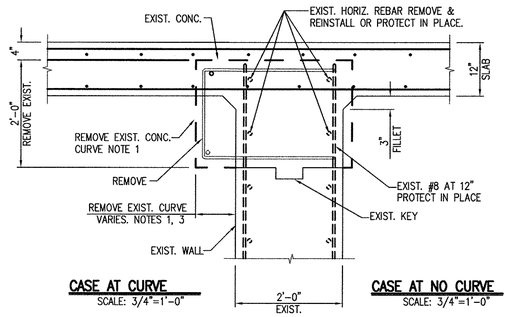


SECTION AT INTERIOR WALL (2) VWS-101
SCALE: 3/4"=1'-0"

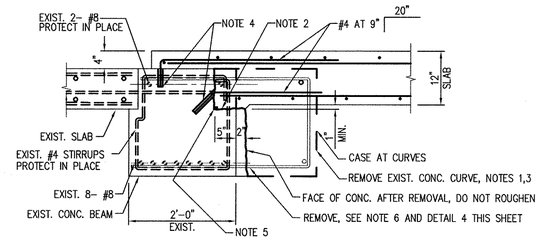


SECTION AT BEAM (3) VWS-101
SCALE: 3/4"=1'-0"

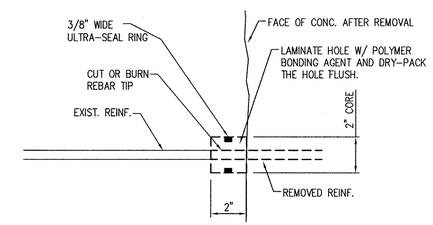


REINF. CAP (4) VWS-101
SCALE: 3"=1'-0"

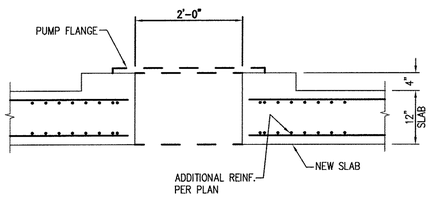


SECTION AT PUMP OPENING (5) VWS-101
SCALE: 3/4"=1'-0"

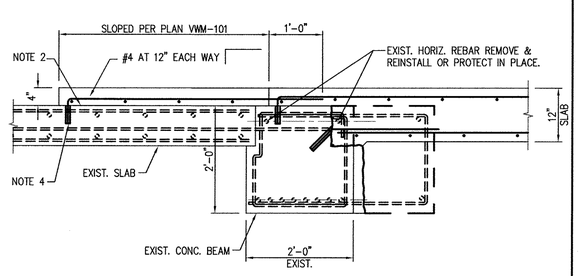


FOR ALL OTHER INFO. NOT SHOWN SEE DETAIL (3) THIS SHEET

LANDING OVER SLAB (6) VWS-101
SCALE: 3/4"=1'-0"

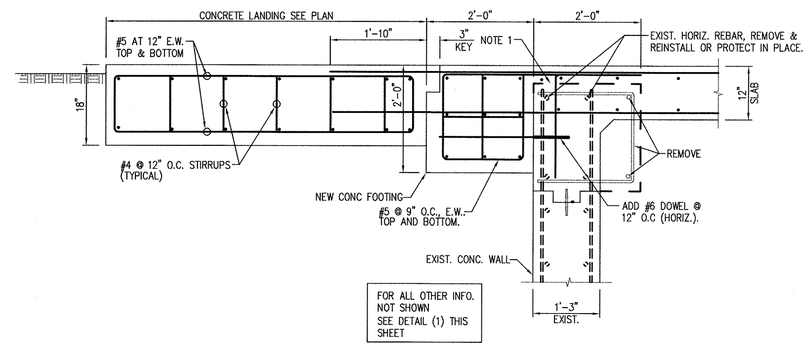


FOR ALL OTHER INFO. NOT SHOWN SEE DETAIL (1) THIS SHEET

EXTERIOR LANDING (7) VWS-101
SCALE: 3/4"=1'-0"

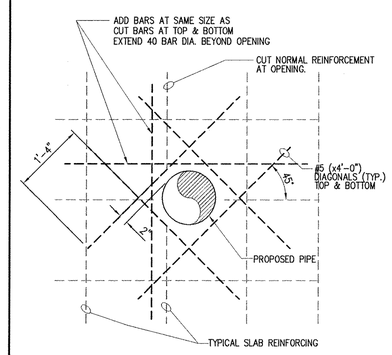


REINFORCEMENT AROUND FLOOR, ROOF & WALL PENETRATIONS DETAIL (8) VWS-101
SCALE: 3/4"=1'-0"

VWS-102

| REVISION | | |
|---|---|---|
| NO. | DESCRIPTION | DATE |
| | | |

REGISTERED PROFESSIONAL ENGINEER CHRISTOPHER SHEM HAWES 69578 6/30/2010 CIVIL STATE OF CALIFORNIA

APPROVED BY: C. Shem Hawes 69578 CHRISTOPHER SHEM HAWES RCE — 2/25/08 DATE
APPROVED: — DATE
APPROVED: — DATE

PLANS PREPARED BY:
CIVILTEC engineering inc.
*General Civil, Municipal, Water and Wastewater Engineering, Planning, Construction Management and Surveying*
118 West Lime Avenue
Monrovia, Ca. 91016
Phone: (626) 357-0588
Fax: (626) 303-7957

Battelle
*The Business of Innovation*

CITY OF PASADENA INCORPORATED JUNE 1886

D.S.-209 & 210A

| DATE | SCALE | PASADENA WATER & POWER CITY OF PASADENA | SHEET NO 37 OF 79 SHEETS |
|---|---|---|---|
| FEBRUARY 2009 | AS SHOWN | | |
| DRAWN BY CIVILTEC | | MONK HILL TREATMENT SYSTEM | WORK ORDER 02557 / FILE NUMBER E-1670 |
| DESIGNED BY CIVILTEC | | VENTURA WELL STRUCTURAL DETAILS | |
| CHECKED BY CIVILTEC | | | |
| SUBMITTED BY CIVILTEC | | | |
| FIELD BOOKS | CALC BOOKS | APPROVED / APPROVED | REVISION |

X:\20072\27140-PD_MONKHILL TREATMENT PLANT\DWG\SUBMITTALS\FINAL SUBMITTAL\27140-VWS-102.DWG (02-27-09 9:03:20AM)

SCALE 1/4"=1'-0"

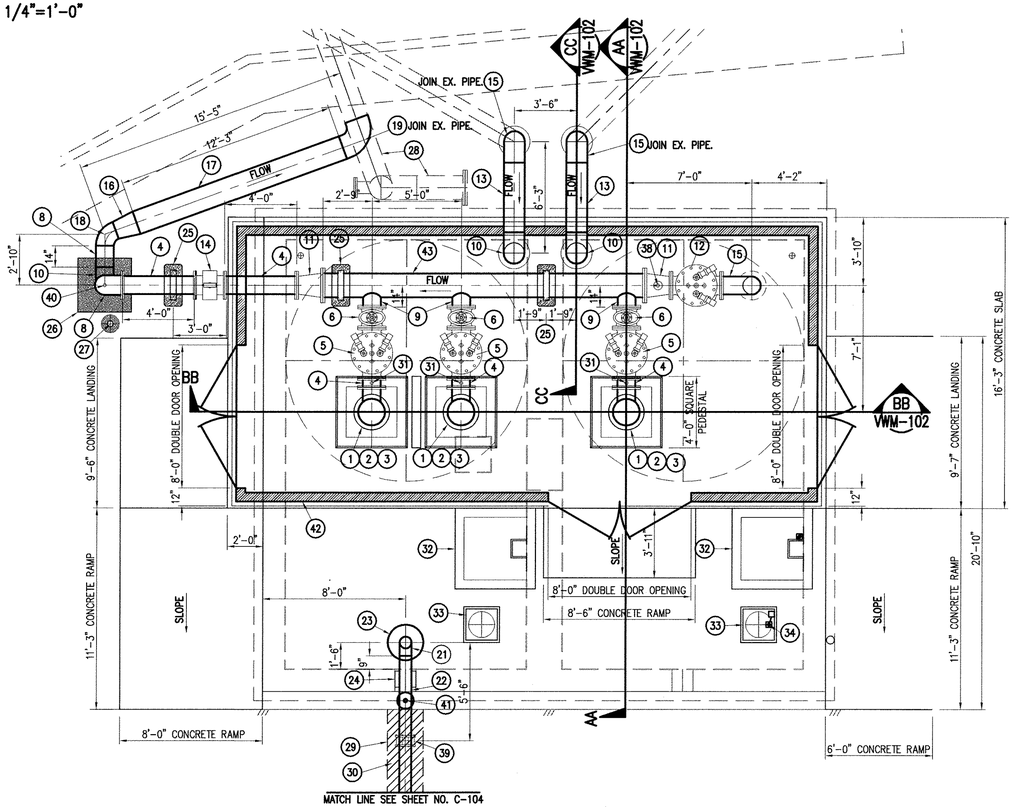


## PIPING PLAN

SCALE: 1/4"=1'-0"

## CONSTRUCTION NOTES: (THIS SHEET ONLY)

1. INSTALL 250hp MOTOR. (SEE SPECIFICATIONS FOR MAKE AND MODEL)
2. INSTALL VERTICAL TURBINE PUMP. (2850gpm) (SEE SPECIFICATIONS FOR MAKE AND MODEL. P-101, P-102, P-103 FROM LEFT TO RIGHT)
3. INSTALL 12" STEEL DISCHARGE HEADER, FExFE.
4. INSTALL 12" STEEL SPOOL, FExFE. (HORIZ.)
5. INSTALL 12" CHECK VALVE, FExFE, (SEE SPECIFICATIONS FOR MAKE AND MODEL. V-101, V-103, V-105 FROM LEFT TO RIGHT)
6. INSTALL 12" RESILIENT WEDGE GATE VALVE, FExFE, W/ HANDWHEEL OPERATOR. (SEE SPECIFICATIONS FOR MAKE AND MODEL. V-102, V-104, V-106 FROM LEFT TO RIGHT)
7. INSTALL 8" DUCTILE IRON PIPE, PRESSURE CLASS 52.
8. INSTALL 12" STEEL SPOOL, WELDxWELD. (VERT.)
9. INSTALL 12" STEEL SPOOL, FExWELD. (HORIZ.)
10. INSTALL 12"-90° STEEL BEND, WELDxWELD. (VERT.)
11. INSTALL 16"x12" STEEL REDUCER, FExFE.
12. INSTALL 12" SURGE CONTROL VALVE, FExFE, (SEE SPECIFICATIONS FOR MAKE AND MODEL. V-111)
13. INSTALL 12" STEEL SPOOL, WELDxWELD. (HORIZ.)
14. INSTALL 12" MAG FLOW METER, FExFE, (SEE SPECIFICATIONS FOR MAKE AND MODEL. FIT-100)
15. INSTALL 12"-90° STEEL BEND, FExPE. (VERT.)
16. INSTALL 16"x12" STEEL REDUCER, WELDxWELD.
17. INSTALL 16" STEEL SPOOL, WELDxWELD. (HORIZ.)
18. INSTALL 12"-70° STEEL BEND, WELDxWELD (HORIZ.)(CUT TO FIT IN THE FIELD).
19. INSTALL 16"-90° STEEL BEND, WELDxWELD. (HORIZ.)
20. INSTALL 12" STEEL SLIP-ON WELDING FLANGE (PLACE IN NEW CONC. SLAB).
21. INSTALL 8" STEEL 90° BEND, WELDxWELD. (VERT.)
22. INSTALL 8" STEEL PIPE, WELDxWELD. (HORIZ.)
23. INSTALL 2'ø x 8" STEEL FUNNEL.
24. INSTALL 8" LEAK SEAL PER DETAIL NO. 1 ON SHEET NO. DT-105.
25. CONSTRUCT CONCRETE PIPE SUPPORT PER DETAIL NO. 4 AND NO. 5 ON SHEET VWA-104.
26. CONSTRUCT 3' SQUARE X 3' DEEP CONCRETE THRUST BLOCK.
27. INSTALL FIXED POST BARRIER PER DETAIL NO. 4 ON SHEET NO. DT-101.
28. CUT AND REMOVE INTERFERING PORTIONS OF EX. WATER LINE.
29. REMOVE EXISTING A.C. PAVEMENT.
30. 4" A.C. PAVEMENT, 1 1/2" FINISHED COARSE OVER 2 1/2" LEVELING COARSE OVER COMPACTED 6" NATIVE MATERIAL COMPACTED TO 90% RELATIVE DENSITY.
31. INSTALL 2" THREAD-O-LET, 2"x1" NYLON BUSHING, 1" NIPPLE, 1" FULL PORT BALL VALVE, THREADED BOTH ENDS WITH LOCKING HANDLE, 1"x1/4" NYLON BUSHING, PRESSURE SWITCH, MERCOID TYPE DA, MODEL NO. DAW 7033-153-7 WITH 1/4" NPT CONNECTOR. (SEE ELECTRICAL PLANS)
32. INSTALL ALUM. DOUBLE DOOR ACCESS HATCH COVER PER DETAIL NO. 3 ON SHEET NO. VWA-104.
33. INSTALL 24" SQ. STEEL HATCH COVER WITH SPRING HINGED AND LOCKING HASP.
34. INSTALL SONIC LEVEL TRANSDUCER AND FITTINGS MOUNTED ON INSIDE OF OPENING. (SEE ELECTRICAL PLAN LIT-101)
35. SAW CUT, REMOVE 6-INCH DEEP EXISTING WET WELL FLOOR STRUCTURE, PROTECT EXIST. REBAR IN PLACE, TIE-IN NEW REINFORCING TO EXIST. REBARS AS REQUIRED, CONSTRUCT NEW CONC. FOOTING AND 6" THICK BY 3' HIGH BY 4' LG. CONC. WALL W/ #4 REINFORCING @ 12" O.C. (VERT. & HORIZ.).
36. INSTALL 12" GRAVITY TURBINE ROOF VENTILATOR.
37. INSTALL 4' SQUARE BUILDING ROOF HATCH PER DETAIL NO. 1 ON SHEET NO. VWA-105.
38. INSTALL 1 1/2" THREAD-O-LET, 1 1/2"x1" NYLON BUSHING, 1" NIPPLE, 1" CORPORATION STOP, MIP THREADED ON BOTH ENDS 1" AIR RELEASE VACUUM VALVE, APCO MODEL NO. 142 PER DETAIL NO. 4 ON SHEET DT-106. (SEE SPECS FOR MAKE AND MODEL V-139)
39. INSTALL 8" TRANSITION COUPLING (STEEL X DUCTILE IRON).
40. INSTALL 1" THREAD-O-LET, 1"x1/4" NYLON BUSHING, ROSEMOUNT PRESSURE TRANSDUCER/ TRANSMITTER WITH 1/4" NPT MALE CONNECTOR WITH MANUAL GAUGE FITTING AS REQUIRED. (SEE SPECS FOR MAKE AND MODEL PIT-100 AND PI-100)
41. INSTALL 1" THREAD-O-LET, 1"x 3/4" NYLON BUSHING, 3/4" FLOW SWITCH, " SWITCH PRO FLOW SWITCH" OR APPROVED EQUAL, RELAY: SPDT, 110VAC, POWER: 120VAC, MAX. PRESSURE: 150psi, MOUNTING: 3/4" NPT FS-100.
42. CONSTRUCT 15'-6" X 33'-0" SINGLE SLOPED ROOF METAL FRAME BUILDING WITH R19 ACOUSTICAL INSULATED EXTERIOR WALLS AND ROOF, "PARKLINE" MANUFACTURER OR APPROVED EQUAL.
43. INSTALL 16" STEEL SPOOL, FExFE. (HORIZ.)

X – INDICATES LOCATION FOR THE ADJUSTABLE PIPE SUPPORT PER DETAIL NO. 5 ON SHEET NO. DT-110.

**NOTE:**

ALL STEEL PIPING ABOVE GROUND SHALL BE CEMENT MORTAR LINED AND PAINTED.
ALL STEEL PIPING BELOW GROUND SHALL BE CEMENT MORTAR LINED AND COATED.
STOP CEMENT MORTAR COATING 3" ABOVE GROUND.

VWM-101

| REVISION | | |
|---|---|---|
| NO. | DESCRIPTION | DATE |
| | | |
| | | |
| | | |
| | | |

REGISTERED PROFESSIONAL ENGINEER CHRISTOPHER SHEM HAWES 69578 6/30/2010 CIVIL STATE OF CALIFORNIA

APPROVED BY: C. Shem Hawes 69578 CHRISTOPHER SHEM HAWES RCE — 2/25/08 DATE
APPROVED: _____ DATE
APPROVED: _____ DATE

PLANS PREPARED BY:
CIVILTEC engineering inc.
*General Civil, Municipal, Water and Wastewater Engineering, Planning, Construction Management and Surveying*
118 West Lime Avenue
Monrovia, Ca. 91016
Phone: (626) 357-0588
Fax: (626) 303-7957

Battelle
*The Business of Innovation*

CITY OF PASADENA INCORPORATED JUNE 1886

D.S.-209 & 210A

| | | | |
|---|---|---|---|
| DATE: FEBRUARY 2009 | SCALE: AS SHOWN | PASADENA WATER & POWER CITY OF PASADENA | SHEET NO 38 OF 79 SHEETS |
| DRAWN BY CIVILTEC / DESIGNED BY CIVILTEC / CHECKED BY CIVILTEC / SUBMITTED BY CIVILTEC | | MONK HILL TREATMENT SYSTEM VENTURA WELL MECHANICAL PIPING PLAN | WORK ORDER 02557 / FILE NUMBER E-1670 |
| FIELD BOOKS | CALC BOOKS | APPROVED / APPROVED | REVISION |

X:\20072\27140-PL MONHILL TREATMENT PLANT\DWG\SUBMITTALS\FINAL SUBMITTAL\27140-VWM-101.DWG (02-27-09 9:05:29AM)

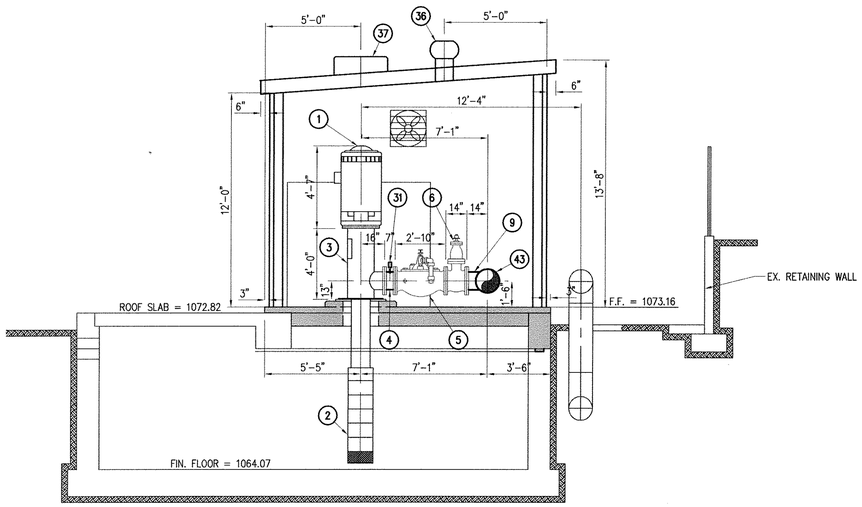


SECTION AA
SCALE: 1/4"=1'-0" VWS-101

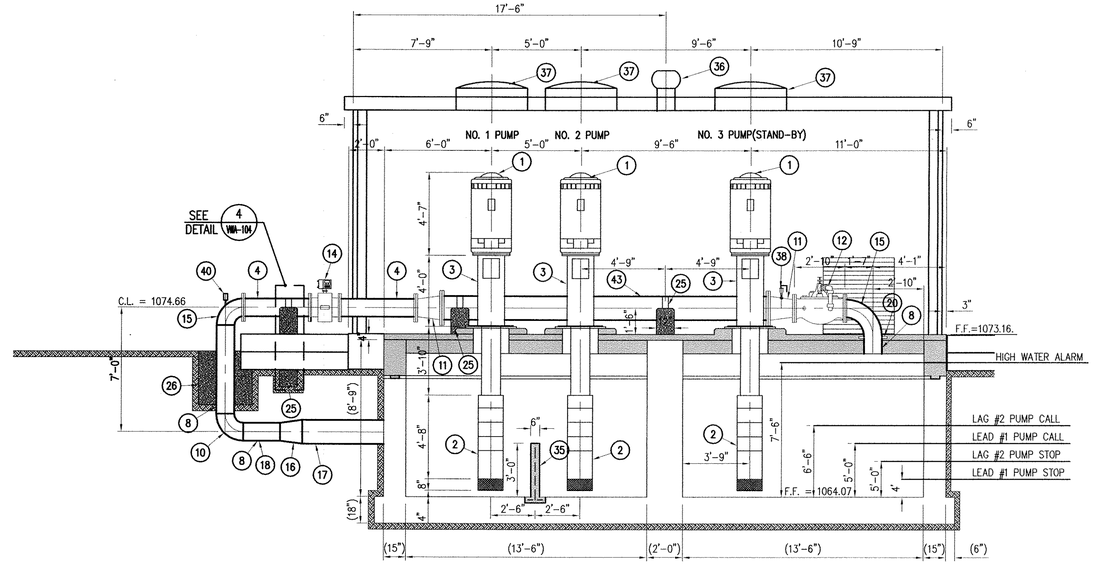


SECTION BB
SCALE: 1/4"=1'-0" VWS-101

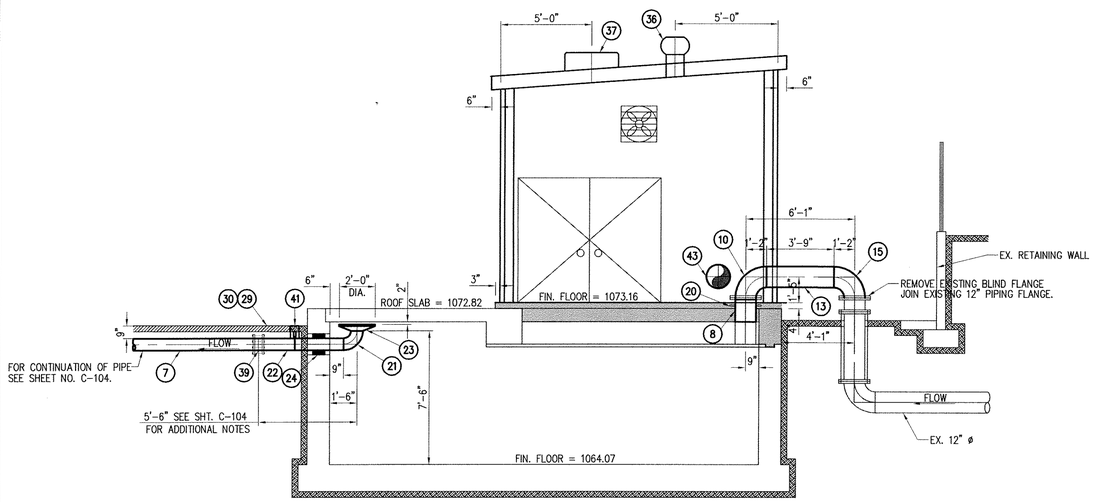


SECTION CC
SCALE: 1/4"=1'-0" VWS-101

## CONSTRUCTION NOTES: (THIS SHEET ONLY)

1. INSTALL 250hp MOTOR. (SEE SPECIFICATIONS FOR MAKE AND MODEL)
2. INSTALL VERTICAL TURBINE PUMP. (2850gpm) (SEE SPECIFICATIONS FOR MAKE AND MODEL)
3. INSTALL 12" STEEL DISCHARGE HEADER, FExFE.
4. INSTALL 12" STEEL SPOOL, FExFE. (HORIZ.)
5. INSTALL 12" CHECK VALVE, FExFE, (SEE SPECIFICATIONS FOR MAKE AND MODEL)
6. INSTALL 12" RESILIENT WEDGE GATE VALVE, FExFE, W/ HANDWHEEL OPERATOR. (SEE SPECIFICATIONS FOR MAKE AND MODEL)
7. INSTALL 8" DUCTILE IRON PIPE, PRESSURE CLASS 52.
8. INSTALL 12" STEEL SPOOL, WELDxWELD. (VERT.)
9. INSTALL 12" STEEL SPOOL, FExWELD. (HORIZ.).
10. INSTALL 12"-90° STEEL BEND, WELDxWELD. (VERT.).
11. INSTALL 16"x12" STEEL REDUCER, FExFE.
12. INSTALL 12" SURGE CONTROL VALVE, FExFE, (SEE SPECIFICATIONS FOR MAKE AND MODEL)
13. INSTALL 12" STEEL SPOOL, WELDxWELD. (HORIZ.)
14. INSTALL 12" MAG FLOW METER, FExFE, (SEE SPECIFICATIONS FOR MAKE AND MODEL)
15. INSTALL 12"-90° STEEL BEND, FExWELD. (VERT.)
16. INSTALL 16"x12" STEEL REDUCER, WELDxWELD.
17. INSTALL 16" STEEL SPOOL, WELDxWELD. (HORIZ.)
18. INSTALL 12"-70° STEEL BEND, WELDxWELD. (HORIZ.)(CUT TO FIT IN THE FIELD)
20. INSTALL 12" STEEL SLIP-ON WELDING FLANGE, TO BE PLACE IN CONC. SLAB.
21. INSTALL 8" STEEL 90° BEND, WELDxWELD. (VERT.)
22. INSTALL 8" STEEL PIPE, WELDxWELD. (HORIZ.)
23. INSTALL 2'ø x 8" STEEL FUNNEL.
24. INSTALL 8" LEAK SEAL PER DETAIL NO. 1 ON SHEET NO. DT-105.
25. CONSTRUCT CONCRETE PIPE SUPPORT PER DETAIL NO. 4 AND NO. 5 ON SHEET NO. VWA-104.
26. CONSTRUCT 3' SQUARE X 3' DEEP CONCRETE THRUST BLOCK.
27. INSTALL FIXED POST BARRIER PER DETAIL NO. 4 ON SHEET NO. DT-101.
28. CUT AND REMOVE INTERFERING PORTIONS OF EX. 16" WATER LINE.
29. REMOVE EXISTING A.C. PAVEMENT.
30. CONSTRUCT 4" A.C. PAVEMENT, 1 1/2" FINISHED COARSE OVER 2 1/2" LEVELING COARSE OVER 6" NATIVE MATERIAL COMPACTED TO 90% RELATIVE DENSITY.
31. INSTALL 1" THREAD-O-LET, 1"x1/2" NYLON BUSHING, 1/2" NIPPLE, 1/2" FULL PORT BALL VALVE, SCREWED END WITH LOCKING HANDLE, 1/2"x1/4" NYLON BUSHING, PRESSURE GAUGE WITH 1/4" NPT CONNECTOR.
34. INSTALL SONIC LEVEL TRANSDUCER, MOUNT ON INSIDE OF OPENING. (SEE ELECTRICAL PLANS)
35. SAW CUT, REMOVE 6-INCH DEEP EXISTING WET WELL STRUCTURE, PROTECT EXIST. REINFORCEMENT IN PLACE, TIE-IN NEW REINFORCING TO EXISTING REBARS AS REQUIRED, CONSTRUCT NEW CONC. FOOTING AND 6" THICK X 3' HIGH X 4' LG. CONC. WALL WITH #4 REINFORCING @ 12" O.C.(VERT. & HORIZ.)
36. INSTALL 12" SQUARE ROOF GRAVITY TURBINE VENTILATOR, SEE SPECS. FOR MAKE AND MODEL.
37. INSTALL 4' SQUARE BUILDING ROOF HATCH COVER PER DETAIL NO. 1 ON SHEET NO. VWA-105, SEE SPECS FOR MAKE AND MODEL.
38. INSTALL 1" AIR/VACUUM VALVE ASSEMBLY, 1 1/2" THREAD-O-LET, 1 1/2"X1" NYLON BUSHING, 1" CORP. STOP, APCO MODEL NO. 142 OR APPROVED EQUAL.
39. INSTALL 8" TRANSITION COUPLING (STEEL X DUCTILE IRON).
40. INSTALL 1" THREAD-O-LET, 1"x1/4" NYLON BUSHING, ASHCROFT MODEL V2 PRESSURE TRANSDUCER/ TRANSMITTER WITH 1/4" NPT CONNECTOR. (SEE ELECTRICAL PLANS)
41. INSTALL 1" THREAD-O-LET, 1"x3/4" NYLON BUSHING, 3/4" FLOW SWITCH, "SWITCH PRO FLOW SWITCH" OR APPROVED EQUAL, RELAY: SPDT, 10VAC, POWER: 120VAC, MAX. PRESSURE: 150psi, MOUNTING: 3/4" NPT.
43. INSTALL 16" STEEL SPOOL, FExFE. (HORIZ.)

X - INDICATES LOCATION FOR THE ADJUSTABLE PIPE SUPPORT PER DETAIL NO. 5 ON SHEET NO. DT-110..

**NOTE:**

ALL STEEL PIPING ABOVE GROUND SHALL BE CEMENT MORTAR LINED AND PAINTED.
ALL STEEL PIPING BELOW GROUND SHALL BE CEMENT MORTAR LINED AND COATED.
STOP CEMENT MORTAR COATING 3" ABOVE GROUND.

VWM-102

| REVISION | | |
|---|---|---|
| NO. | DESCRIPTION | DATE |
| | | |
| | | |
| | | |
| | | |

REGISTERED PROFESSIONAL ENGINEER CHRISTOPHER SHEM HAWES 69578 CIVIL STATE OF CALIFORNIA 6/20/2010

APPROVED BY: CHRISTOPHER SHEM HAWES 69578 RCE — DATE 2/25/08
APPROVED: — DATE
APPROVED: — DATE

PLANS PREPARED BY:
CIVILTEC engineering inc.
*General Civil, Municipal, Water and Wastewater Engineering, Planning, Construction Management and Surveying*
118 West Lime Avenue
Monrovia, Ca. 91016
Phone: (626) 357-0588
Fax: (626) 303-7957

Battelle
*The Business of Innovation*

CITY OF PASADENA INCORPORATED JUNE 1886

D.S.-209 & 210A

| DATE | SCALE | PASADENA WATER & POWER CITY OF PASADENA | SHEET NO 39 OF 79 SHEETS |
|---|---|---|---|
| FEBRUARY 2009 | AS SHOWN | | |
| DRAWN BY CIVILTEC | | MONK HILL TREATMENT SYSTEM | WORK ORDER 02557 / FILE NUMBER E-1670 |
| DESIGNED BY CIVILTEC | | VENTURA WELL STRUCTURAL SECTIONS | |
| CHECKED BY CIVILTEC | | | |
| SUBMITTED BY CIVILTEC | | | |
| FIELD BOOKS | CALC BOOKS | APPROVED / APPROVED | REVISION |

X:\0207\27140-PL WORKBILL TRCTMENT PLANT\DWG\SUBMITTALS\FINAL SUBMITTAL\27140-VWM-102.DWG (03-02-09 8:44:06AM)

## VALVE EQUIPMENT SCHEDULE

| V # | PROCESS NO | LOCATION | SERVICE | TYPE | SIZE | QUANTITY | MATERIAL | CONNECTION | MAKE & MODEL | REMARKS |
|---|---|---|---|---|---|---|---|---|---|---|
| V-101 | | BOOSTER STATION | BACKFLOW PREVENTION | SWING CHECK VALVE | 12" | 1 | IRON BODY, BRONZE MOUNTED | FLXFL | M&H | CONTRACTOR FURNISHED |
| V-102 | | BOOSTER STATION | PUMP ISOLATION | GATE | 12" | 1 | DUCTILE IRON BODY | FLXFL | M&H | CONTRACTOR FURNISHED |
| V-103 | | BOOSTER STATION | BACKFLOW PREVENTION | SWING CHECK VALVE | 12" | 1 | IRON BODY, BRONZE MOUNTED | FLXFL | M&H | CONTRACTOR FURNISHED |
| V-104 | | BOOSTER STATION | PUMP ISOLATION | GATE | 12" | 1 | DUCTILE IRON BODY | FLXFL | M&H | CONTRACTOR FURNISHED |
| V-105 | | BOOSTER STATION | BACKFLOW PREVENTION | SWING CHECK VALVE | 12" | 1 | IRON BODY, BRONZE MOUNTED | FLXFL | M&H | CONTRACTOR FURNISHED |
| V-106 | | BOOSTER STATION | PUMP ISOLATION | GATE | 12" | 1 | DUCTILE IRON BODY | FLXFL | M&H | CONTRACTOR FURNISHED |
| V-107 | | BOOSTER STATION | PRESSURE TRANSMITTER ISOLATION | BALL | 1/2" | 1 | BRASS(NIBCO)-BRONZE(APOLLO) | THREADED | NIBCO T-FP-250 OR APOLLO | CONTRACTOR FURNISHED |
| V-108 | | BOOSTER STATION | PRESSURE TRANSMITTER ISOLATION | BALL | 1/2" | 1 | BRASS(NIBCO)-BRONZE(APOLLO) | THREADED | NIBCO T-FP-250 OR APOLLO | CONTRACTOR FURNISHED |
| V-109 | NOT USED | | | | | | | | | |
| V-110 | NOT USED | | | | | | | | | |
| V-111 | | BOOSTER STATION | PRESSURE RELIEF | RELIEF | 12" | 1 | CAST IRON BODY | FLXFL | CLA-VAL | CONTRACTOR FURNISHED |
| V-112 | | WINDSOR WELL | WINDSOR WELL ISOLATION | EXISTING GATE | 12" | 1 | | EXISTING | EXISTING | |
| V-113 | | BOOSTER STATION DISCHARGE | FLOW ISOLATION | EXISTING GATE | 16" | 1 | CAST IRON BODY | EXISTING | EXISTING | |
| V-114 | | WINDSOR WELL DISCHARGE | FLOW ISOLATION | GATE 1 | 12" | 1 | DUCTILE IRON BODY | FLXFL | M&H | CONTRACTOR FURNISHED |
| V-115 | | BACKWASH SUPPLY | BACKFLOW PREVENTION | RPP | 8" | 1 | | FLXFL | FEBCO | CONTRACTOR FURNISHED |
| V-116 | | FIRE SERVICE | FIRE SERVICE ISOLATION | GATE | 12" | 1 | DUCTILE IRON BODY | FLxMJ | | BY OTHERS |
| V-117 | | BACKWASH SUPPLY | FLOW ISOLATION | GATE | 12" | 1 | DUCTILE IRON BODY | FEXMJ | M&H | BY OTHERS |
| V-118 | | BACKWASH DISCHARGE | FLOW ISOLATION | GATE | 10" | 1 | DUCTILE IRON BODY | MJXMJ | M&H | CONTRACTOR FURNISHED |
| V-119 | | BACKWASH DISCHARGE | FLOW ISOLATION | BALL | 4" | 1 | BRASS(NIBCO)-BRONZE(APOLLO) | THREADED | NIBCO T-FP-600N OR APOLLO | CONTRACTOR FURNISHED |
| V-120 | | BACKWASH DISCHARGE | FLOW ISOLATION | BALL | 4" | 1 | BRASS(NIBCO)-BRONZE(APOLLO) | THREADED | NIBCO T-FP-600N OR APOLLO | CONTRACTOR FURNISHED |
| V-121 | | DISCHARGE WATER TO SAND BOX | FLOW ISOLATION | BUTTERFLY | 24" | 1 | CAST IRON BODY | FLXFL | M&H | CONTRACTOR FURNISHED |
| V-122 | | CLEAN WATER TO WINDSOR RESERV. | FLOW ISOLATION | BUTTERFLY | 24" | 1 | CAST IRON BODY | FLXFL | M&H | CONTRACTOR FURNISHED |
| V-123 | | BACKWASH DISCHARGE FILTER | FLOW ISOLATION | BUTTERFLY | 10" | 1 | CAST IRON BODY | FLXFL | M&H | CONTRACTOR FURNISHED |
| V-124 | 1 | BACKWASH DISCHARGE FILTER | FLOW ISOLATION | BUTTERFLY | 10" | 1 | CAST IRON BODY | FLXFL | M&H | CONTRACTOR FURNISHED |
| V-131 | | EXISTING WINDSOR WELL | PRESSURE TRANSMITTER | BALL | 1/2" | 1 | | THREADED | | BY OTHERS |
| V-132 | | EXISTING WINDSOR WELL | PRESSURE TRANSMITTER | BALL | 1/2" | 1 | | THREADED | | BY OTHERS |
| V-133 | | EXISTING VENTURA WELL | PRESSURE TRANSMITTER | BALL | 1/2" | 1 | | THREADED | | BY OTHERS |
| V-134 | | EXISTING VENTURA WELL | PRESSURE TRANSMITTER | BALL | 1/2" | 1 | | THREADED | | BY OTHERS |
| V-135 | | EXISTING ARROYO WELL | PRESSURE TRANSMITTER | BALL | 1/2" | 1 | | THREADED | | BY OTHERS |
| V-136 | | EXISTING ARROYO WELL | PRESSURE TRANSMITTER | BALL | 1/2" | 1 | | THREADED | | BY OTHERS |
| V-137 | | EXISTING WELL # 52 | PRESSURE TRANSMITTER | BALL | 1/2" | 1 | | THREADED | | BY OTHERS |
| V-138 | | EXISTING WELL # 52 | PRESSURE TRANSMITTER | BALL | 1/2" | 1 | | THREADED | | BY OTHERS |
| V-139 | | BOOSTER STATION | AIR RELEASE VALVE ISOLATION | BALL | 1" | 1 | BRASS (NIBCO)-BRONZE(APOLLO) | THREADED | NIBCO T-FP-250 OR APOLLO | CONTRACTOR FURNISHED |
| V-201 | | INFLUENT FILTER | FILTER ISOLATION | BUTTERFLY | 16" | 1 | | FLXFL | | CALGON CARBON FURNISHED |
| V-202 | | INFLUENT FILTER | FILTER ISOLATION | BUTTERFLY | 16" | 1 | | FLXFL | | CALGON CARBON FURNISHED |
| V-203 | | INFLUENT FILTER | FILTER ISOLATION | BUTTERFLY | 16" | 1 | | FLXFL | | CALGON CARBON FURNISHED |
| V-204 | | INFLUENT FILTER | FILTER ISOLATION | BUTTERFLY | 16" | 1 | | FLXFL | | CALGON CARBON FURNISHED |
| V-205 | | INFLUENT FILTER | FILTER ISOLATION | BUTTERFLY | 16" | 1 | | FLXFL | | CALGON CARBON FURNISHED |
| V-206 | | INFLUENT FILTER | FILTER ISOLATION | BUTTERFLY | 16" | 1 | | FLXFL | | CALGON CARBON FURNISHED |
| V-207 | | INFLUENT FILTER | GSP ISOLATION | BALL | 1/2" | 1 | | THREADED | | CALGON CARBON FURNISHED |
| V-208 | | INFLUENT FILTER | AIR RELEASE VALVE ISOLATION | BALL | 1" | 1 | | THREADED | | CALGON CARBON FURNISHED |
| V-209 | | INFLUENT FILTER | GSP ISOLATION | BALL | 1/2" | 1 | | THREADED | | CALGON CARBON FURNISHED |
| V-210 | | INFLUENT FILTER | SAMPLER ISOLATION | BALL | 1" | 1 | | THREADED | | CALGON CARBON FURNISHED |
| V-212 | | INFLUENT FILTER | AIR RELEASE VALVE ISOLATION | BALL | 1" | 1 | | THREADED | | CALGON CARBON FURNISHED |
| V-214 | | INFLUENT FILTER | SAMPLER ISOLATION | BALL | 1" | 1 | | THREADED | | CALGON CARBON FURNISHED |
| V-216 | | INFLUENT FILTER | AIR RELEASE VALVE ISOLATION | BALL | 1" | 1 | | THREADED | | CALGON CARBON FURNISHED |
| V-218 | | INFLUENT FILTER | SAMPLER ISOLATION | BALL | 1" | 1 | | THREADED | | CALGON CARBON FURNISHED |
| V-219 | | INFLUENT FILTER | PRESSURE TRANSMITTER | BALL | 1/2" | 1 | | THREADED | | CALGON CARBON FURNISHED |
| V-220 | | INFLUENT FILTER | PRESSURE TRANSMITTER | BALL | 1/2" | 1 | | THREADED | | CALGON CARBON FURNISHED |
| V-221 | | INFLUENT FILTER | PRESSURE INDICATOR | BALL | 1/2" | 1 | | THREADED | | CALGON CARBON FURNISHED |
| V-222 | | INFLUENT FILTER | PRESSURE INDICATOR | BALL | 1/2" | 1 | | THREADED | | CALGON CARBON FURNISHED |
| V-223 | | INFLUENT FILTER | AIR RELEASE VALVE ISOLATION | BALL | 1" | 1 | | THREADED | | CONTRACTOR FURNISHED |
| V-224 | | INFLUENT FILTERS | AIR RELEASE VALVE ISOLATION | BALL | 1" | 1 | BRASS (NIBCO)-BRONZE(APOLLO) | THREADED | NIBCO T-FP-250 OR APOLLO | CONTRACTOR FURNISHED 1 |
| V-3A | | IX VESSELS - UNTREATED WATER | INFLUENT ISOLATION | BUTTERFLY | 10" | 4 | | FLXFL | | CALGON CARBON FURNISHED |
| V-3B | | IX VESSELS - UNTREATED WATER | INFLUENT ISOLATION | BUTTERFLY | 10" | 4 | | FLXFL | | CALGON CARBON FURNISHED |
| V-3C | | IX LEAD VESSEL - UNTREATED WATER | INFLUENT ISOLATION | BUTTERFLY | 10" | 4 | | FLXFL | | CALGON CARBON FURNISHED |

SCH-101

### REVISION

| NO. | DESCRIPTION | DATE |
|---|---|---|
| 1 | BUILDING DEPARTMENT PLAN CHECK COMMENTS | 01/05/09 |
| | | |
| | | |

REGISTERED PROFESSIONAL ENGINEER CHRISTOPHER SHEM HAWES 69578 12/30/2010 CIVIL STATE OF CALIFORNIA

APPROVED BY: C. Shem Hawes 69578 — CHRISTOPHER SHEM HAWES RCE — DATE 02/25/09

APPROVED: — DATE

APPROVED: — DATE

PLANS PREPARED BY:

CIVILTEC engineering inc.

*General Civil, Municipal, Water and Wastewater Engineering, Planning, Construction Management and Surveying*

118 West Lime Avenue
Monrovia, Ca. 91016
Phone: (626) 357-0588
Fax: (626) 303-7957

Battelle
*The Business of Innovation*

CITY OF PASADENA INCORPORATED JUNE 1886

D.S.-209 & 210A

| | | | |
|---|---|---|---|
| DATE DECEMBER 2008 | SCALE AS SHOWN | PASADENA WATER & POWER CITY OF PASADENA | SHEET NO 40 OF 79 SHEETS |
| DRAWN BY CIVILTEC<br>DESIGNED BY CIVILTEC<br>CHECKED BY CIVILTEC<br>SUBMITTED BY CIVILTEC | | MONK HILL TREATMENT SYSTEM<br>VALVE SCHEDULE | WORK ORDER 02557 / FILE NUMBER E-1670 |
| FIELD BOOKS / CALC BOOKS | | APPROVED / APPROVED | REVISION |

X:\2007\27140-JR, MONKHILL TREATMENT PLANT\DWG\SUBMITTALS\FINAL SUBMITTAL\27140-SCH-101.DWG (02-27-09 9:21:14AM)

VALVE EQUIPMENT SCHEDULE

| V # | PROCESS NO | LOCATION | SERVICE | TYPE | SIZE | QUANTITY | MATERIAL | CONNECTION | MAKE & MODEL | REMARKS |
|---|---|---|---|---|---|---|---|---|---|---|
| V-3D | | IX LAG VESSEL - UNTREATED WATER | INFLUENT ISOLATION | BUTTERFLY | 10" | 4 | | FLXFL | | CALGON CARBON FURNISHED |
| V-3E | | IX VESSELS - TREATED WATER | EFFLUENT ISOLATION | BUTTERFLY | 10" | 4 | | FLXFL | | CALGON CARBON FURNISHED |
| V-3F | | IX VESSELS - TREATED WATER | EFFLUENT ISOLATION | BUTTERFLY | 10" | 4 | | FLXFL | | CALGON CARBON FURNISHED |
| V-3G | | IX VESSELS - BACKWASH SUPPLY | BACKWASH ISOLATION | BUTTERFLY | 4" | 4 | | FLXFL | | CALGON CARBON FURNISHED |
| V-3H | | IX VESSELS - BACKWASH SUPPLY | BACKWASH ISOLATION | BUTTERFLY | 4" | 4 | | FLXFL | | CALGON CARBON FURNISHED |
| V-3I | | IX VESSELS - BACKWASH DISCHARGE | BACKWASH ISOLATION | BUTTERFLY | 10" | 4 | | FLXFL | | CALGON CARBON FURNISHED |
| V-3J | | IX VESSELS - BACKWASH DISCHARGE | BACKWASH ISOLATION | BUTTERFLY | 10" | 4 | | FLXFL | | CALGON CARBON FURNISHED |
| V-3K | | IX LAG VESSEL - PDIT | ISOLATION | BALL | 1/2" | 4 | | THREADED | | CALGON CARBON FURNISHED |
| V-3L | | IX LEAD VESSEL - PDIT | ISOLATION | BALL | 1/2" | 4 | | THREADED | | CALGON CARBON FURNISHED |
| V-3M | | IX VESSELS - (PI) UNTREATED WATER | ISOLATION | BALL | 1/2" | 4 | | THREADED | | CALGON CARBON FURNISHED |
| V-3N | | IX VESSELS - (PI) UNTREATED WATER | ISOLATION | BALL | 1/2" | 4 | | THREADED | | CALGON CARBON FURNISHED |
| V-3O | | IX VESSELS - (PDIT) UNTREATED WATER | ISOLATION | BALL | 1/2" | 4 | | THREADED | | CALGON CARBON FURNISHED |
| V-3P | | IX VESSELS - (PDIT) UNTREATED WATER | ISOLATION | BALL | 1/2" | 4 | | THREADED | | CALGON CARBON FURNISHED |
| V-3Q | | IX LEAD VESSEL - (PI) BACKWASH SUPPLY | ISOLATION | BALL | 1/2" | 4 | | THREADED | | CALGON CARBON FURNISHED |
| V-3R | | IX LAG VESSEL - (PI) BACKWASH SUPPLY | ISOLATION | BALL | 1/2" | 4 | | THREADED | | CALGON CARBON FURNISHED |
| V-3S | | IX VESSEL - SAMPLER | ISOLATION | GLOBE | 4" | 8 | | THREADED | | CALGON CARBON FURNISHED |
| V-3T | | IX VESSEL - SAMPLER | ISOLATION | BALL | 1/2" | 8 | | THREADED | | CALGON CARBON FURNISHED |
| V-3U | | IX VESSEL | ISOLATION | BALL | 1/2" | 8 | | THREADED | | CALGON CARBON FURNISHED |
| V-3V | | IX VESSEL - SAMPLER | ISOLATION | GLOBE | 1" | 8 | | THREADED | | CALGON CARBON FURNISHED |
| V-3W | | IX VESSEL | ISOLATION | BALL | 1/2" | 8 | | THREADED | | CALGON CARBON FURNISHED |
| V-3X | | IX VESSEL | ISOLATION | BALL | 1/2" | 8 | | THREADED | | CALGON CARBON FURNISHED |
| V-3Y | | IX VESSEL | ISOLATION | BALL | 1" | 8 | | THREADED | | CALGON CARBON FURNISHED |
| V-3Z | | IX VESSEL | ISOLATION | BALL | 1/2" | 8 | | THREADED | | CALGON CARBON FURNISHED |
| V-3AA | | IX VESSEL - RELEASE | ISOLATION | BALL | 1" | 8 | | THREADED | | CALGON CARBON FURNISHED |
| V-4A | | LGAC VESSELS - UNTREATED WATER | INFLUENT ISOLATION | BUTTERFLY | 10" | 5 | | FLXFL | | CALGON CARBON FURNISHED |
| V-4B | | LGAC VESSELS - UNTREATED WATER | INFLUENT ISOLATION | BUTTERFLY | 10" | 5 | | FLXFL | | CALGON CARBON FURNISHED |
| V-4C | | LGAC LEAD VESSEL - UNTREATED WATER | INFLUENT ISOLATION TO THE LEAD VESSEL | BUTTERFLY | 10" | 5 | | FLXFL | | CALGON CARBON FURNISHED |
| V-4D | | LGAC LAG VESSEL - UNTREATED WATER | INFLUENT ISOLATION TO THE LAG VESSEL | BUTTERFLY | 10" | 5 | | FLXFL | | CALGON CARBON FURNISHED |
| V-4E | | LGAC VESSELS - TREATED WATER | EFFLUENT ISOLATION | BUTTERFLY | 10" | 5 | | FLXFL | | CALGON CARBON FURNISHED |
| V-4F | | LGAC VESSELS - TREATED WATER | EFFLUENT ISOLATION | BUTTERFLY | 10" | 5 | | FLXFL | | CALGON CARBON FURNISHED |
| V-4G | | LGAC VESSELS - BACKWASH SUPPLY | BACKWASH ISOLATION | BUTTERFLY | 4" | 5 | | FLXFL | | CALGON CARBON FURNISHED |
| V-4H | | LGAC VESSELS - BACKWASH SUPPLY | BACKWASH ISOLATION | BUTTERFLY | 4" | 5 | | FLXFL | | CALGON CARBON FURNISHED |
| V-4I | | LGAC VESSELS - BACKWASH DISCHARGE | BACKWASH ISOLATION | BUTTERFLY | 10" | 5 | | FLXFL | | CALGON CARBON FURNISHED |
| V-4J | | LGAC VESSELS - BACKWASH DISCHARGE | BACKWASH ISOLATION | BUTTERFLY | 10" | 5 | | FLXFL | | CALGON CARBON FURNISHED |
| V-4K | | LGAC LAG VESSEL - PDIT | ISOLATION | BALL | 1/2" | 5 | | THREADED | | CALGON CARBON FURNISHED |
| V-4L | | LGAC LEAD VESSEL - PDIT | ISOLATION | BALL | 1/2" | 5 | | THREADED | | CALGON CARBON FURNISHED |
| V-4M | | LGAC VESSELS - (PI) UNTREATED WATER | ISOLATION | BALL | 1/2" | 5 | | THREADED | | CALGON CARBON FURNISHED |
| V-4N | | LGAC VESSELS - (PI) UNTREATED WATER | ISOLATION | BALL | 1/2" | 5 | | THREADED | | CALGON CARBON FURNISHED |
| V-4O | | LGAC VESSELS - (PDIT) UNTREATED WATER | ISOLATION | BALL | 1/2" | 5 | | THREADED | | CALGON CARBON FURNISHED |
| V-4P | | LGAC VESSELS - (PDIT) UNTREATED WATER | ISOLATION | BALL | 1/2" | 5 | | THREADED | | CALGON CARBON FURNISHED |
| V-4Q | | LGAC LEAD VESSEL - (PI) BACKWASH SUPPLY | ISOLATION | BALL | 1/2" | 5 | | THREADED | | CALGON CARBON FURNISHED |
| V-4R | | LGAC LAG VESSEL - (PI) BACKWASH SUPPLY | ISOLATION | BALL | 1/2" | 5 | | THREADED | | CALGON CARBON FURNISHED |
| V-4S | | LGAC VESSEL - SAMPLER | ISOLATION | GLOBE | 4" | 10 | | THREADED | | CALGON CARBON FURNISHED |
| V-4T | | LGAC VESSEL - SAMPLER | ISOLATION | BALL | 1/2" | 10 | | THREADED | | CALGON CARBON FURNISHED |
| V-4U | | LGAC VESSEL | ISOLATION | BALL | 1/2" | 10 | | THREADED | | CALGON CARBON FURNISHED |
| V-4V | | LGAC VESSEL - SAMPLER | ISOLATION | GLOBE | 1" | 10 | | THREADED | | CALGON CARBON FURNISHED |
| V-4W | | LGAC VESSEL | ISOLATION | BALL | 1/2" | 10 | | THREADED | | CALGON CARBON FURNISHED |
| V-4X | | LGAC VESSEL | ISOLATION | BALL | 1/2" | 10 | | THREADED | | CALGON CARBON FURNISHED |
| V-4Y | | LGAC VESSEL | ISOLATION | BALL | 1" | 10 | | THREADED | | CALGON CARBON FURNISHED |
| V-4Z | | LGAC VESSEL | ISOLATION | BALL | 1/2" | 10 | | THREADED | | CALGON CARBON FURNISHED |
| V-4AA | | LGAC VESSEL - BACKWASH DISCHARGE | BACKWASH ISOLATION | BUTTERFLY | 4" | 1 | | FLXFL | | CONTRACTOR FURNISHED |
| V-4AB | | LGAC VESSEL - BACKWASH DISCHARGE | BACKWASH ISOLATION | BUTTERFLY | 4" | 1 | | FLXFL | | CONTRACTOR FURNISHED |
| V-4AC | | LGAC VESSEL - BACKWASH DISCHARGE | BACKWASH ISOLATION | BUTTERFLY | 4" | 1 | | FLXFL | | CONTRACTOR FURNISHED |
| V-4AD | | IX VESSEL - BACKWASH DISCHARGE | FILTER ISOLATION | BUTTERFLY | 4" | 1 | | FLXFL | | CONTRACTOR FURNISHED |
| V-4AE | | IX VESSEL - BACKWASH DISCHARGE | FILTER ISOLATION | BUTTERFLY | 4" | 1 | | FLXFL | | CONTRACTOR FURNISHED |

1

SCH-102

REVISION

| NO. | DESCRIPTION | DATE |
|---|---|---|
| 1 | BUILDING DEPARTMENT PLAN CHECK COMMENTS | 01/05/09 |

REGISTERED PROFESSIONAL ENGINEER CHRISTOPHER SHEM HAWES 69578 6/30/2010 CIVIL STATE OF CALIFORNIA

APPROVED BY: C. Shem Hawes 69578 CHRISTOPHER SHEM HAWES RCE — DATE 2/25/08
APPROVED: — DATE
APPROVED: — DATE

PLANS PREPARED BY:

CIVILTEC engineering inc.

*General Civil, Municipal, Water and Wastewater Engineering, Planning, Construction Management and Surveying*

118 West Lime Avenue
Monrovia, Ca. 91016
Phone: (626) 357-0588
Fax: (626) 303-7957

Battelle
*The Business of Innovation*

CITY OF PASADENA INCORPORATED JUNE 1886

D.S.-209 & 210A

| DATE | SCALE | PASADENA WATER & POWER CITY OF PASADENA | SHEET NO 41 OF 79 SHEETS |
|---|---|---|---|
| FEBRUARY 2009 | AS SHOWN | | |
| DRAWN BY CIVILTEC | | MONK HILL TREATMENT SYSTEM VALVE SCHEDULE | WORK ORDER 02557 / FILE NUMBER E-1670 |
| DESIGNED BY CIVILTEC | | | |
| CHECKED BY CIVILTEC | | | |
| SUBMITTED BY CIVILTEC | | | |
| FIELD BOOKS / CALC BOOKS | | APPROVED / APPROVED | REVISION |

X:\2007\27140-PL MONKHILL TREATMENT PLANT\DWG\SUBMITTALS\FINAL SUBMITTAL\27140-SCH-102.DWG (02-27-09 9:23:09AM)

## PUMP EQUIPMENT SCHEDULE

| P # | PROCESS NO | LOCATION | SERVICE | TYPE | HP (KW) | CAPACITY/SIZE | TDH | MAKE & MODEL | REMARKS |
|---|---|---|---|---|---|---|---|---|---|
| P-101 | | BOOSTER STATION | RAW WATER PUMP | VERTICAL TURBINE | 250 | 2,800 GPM | 270 FT | PEERLESS VERTICAL- 16HxB | CONTRACTOR FURNISHED |
| P-102 | | BOOSTER STATION | RAW WATER PUMP | VERTICAL TURBINE | 250 | 2,800 GPM | 270 FT | PEERLESS VERTICAL- 16HxB | CONTRACTOR FURNISHED |
| P-103 | | BOOSTER STATION | RAW WATER PUMP | VERTICAL TURBINE | 250 | 2,800 GPM | 270 FT | PEERLESS VERTICAL- 16HxB | CONTRACTOR FURNISHED |
| P-801 | | AMMONIA STORAGE AREA | CHEMICAL PUMP | PERISTALTIC | | | | | BY OTHERS |
| P-802 | | AMMONIA STORAGE AREA | CHEMICAL PUMP | PERISTALTIC | | | | | BY OTHERS |

## MECHANICAL EQUIPMENT SCHEDULE

| P # | PROCESS NO | LOCATION | SERVICE | CAPACITY/SIZE | MAKE & MODEL | REMARKS |
|---|---|---|---|---|---|---|
| T-301A | | TREATMENT PAD | PERCHLORATE REMOVAL | 1,750 GPM | CALGON CARBON MODEL 12 | CALGON CARBON FURNISHED |
| T-301B | | TREATMENT PAD | PERCHLORATE REMOVAL | 1,750 GPM | CALGON CARBON MODEL 12 | CALGON CARBON FURNISHED |
| T-302A | | TREATMENT PAD | PERCHLORATE REMOVAL | 1,750 GPM | CALGON CARBON MODEL 12 | CALGON CARBON FURNISHED |
| T-302B | | TREATMENT PAD | PERCHLORATE REMOVAL | 1,750 GPM | CALGON CARBON MODEL 12 | CALGON CARBON FURNISHED |
| T-303A | | TREATMENT PAD | PERCHLORATE REMOVAL | 1,750 GPM | CALGON CARBON MODEL 12 | CALGON CARBON FURNISHED |
| T-303B | | TREATMENT PAD | PERCHLORATE REMOVAL | 1,750 GPM | CALGON CARBON MODEL 12 | CALGON CARBON FURNISHED |
| T-304A | | TREATMENT PAD | PERCHLORATE REMOVAL | 1,750 GPM | CALGON CARBON MODEL 12 | CALGON CARBON FURNISHED |
| T-304B | | TREATMENT PAD | PERCHLORATE REMOVAL | 1,750 GPM | CALGON CARBON MODEL 12 | CALGON CARBON FURNISHED |
| T-401A | | TREATMENT PAD | VOC REMOVAL | 1,400 GPM | CALGON CARBON MODEL 12 | CALGON CARBON FURNISHED |
| T-401B | | TREATMENT PAD | VOC REMOVAL | 1,400 GPM | CALGON CARBON MODEL 12 | CALGON CARBON FURNISHED |
| T-402A | | TREATMENT PAD | VOC REMOVAL | 1,400 GPM | CALGON CARBON MODEL 12 | CALGON CARBON FURNISHED |
| T-402B | | TREATMENT PAD | VOC REMOVAL | 1,400 GPM | CALGON CARBON MODEL 12 | CALGON CARBON FURNISHED |
| 1 T-403A | | TREATMENT PAD | VOC REMOVAL | 1,400 GPM | CALGON CARBON MODEL 12 | CALGON CARBON FURNISHED |
| T-403B | | TREATMENT PAD | VOC REMOVAL | 1,400 GPM | CALGON CARBON MODEL 12 | CALGON CARBON FURNISHED |
| T-404A | | TREATMENT PAD | VOC REMOVAL | 1,400 GPM | CALGON CARBON MODEL 12 | CALGON CARBON FURNISHED |
| T-404B | | TREATMENT PAD | VOC REMOVAL | 1,400 GPM | CALGON CARBON MODEL 12 | CALGON CARBON FURNISHED |
| T-405A | | TREATMENT PAD | VOC REMOVAL | 1,400 GPM | CALGON CARBON MODEL 12 | CALGON CARBON FURNISHED |
| T-405B | | TREATMENT PAD | VOC REMOVAL | 1,400 GPM | CALGON CARBON MODEL 12 | CALGON CARBON FURNISHED |
| F-201 | | TREATMENT PAD | INFLUENT FILTRATION | 3,500 GPM | TOWNER FILTRATION | CALGON CARBON FURNISHED |
| F-202 | | TREATMENT PAD | INFLUENT FILTRATION | 3,500 GPM | TOWNER FILTRATION | CALGON CARBON FURNISHED |
| F-203 | | TREATMENT PAD | INFLUENT FILTRATION | 3,500 GPM | TOWNER FILTRATION | CALGON CARBON FURNISHED |
| F-401 | | TREATMENT PAD | IX BACKFLUSH FILTRATION | 450 GPM | EATON MAXILINE 4 BAG O.A.E | CONTRACTOR FURNISHED |
| F-402 | | TREATMENT PAD | LGAC BACKWASH FILTRATION | 1,750 GPM | EATON MAXILINE 8 BAG O.A.E | CONTRACTOR FURNISHED |

SCH-103

REVISION

| NO. | DESCRIPTION | DATE |
|---|---|---|
| 1 | BUILDING DEPARTMENT PLAN CHECK COMMENTS | 01/05/09 |

REGISTERED PROFESSIONAL ENGINEER CHRISTOPHER SHEM HAWES 69578 6/30/2010 CIVIL STATE OF CALIFORNIA

APPROVED BY: C. Shem Hawes 69578 2/25/08
CHRISTOPHER SHEM HAWES RCE DATE
APPROVED: DATE
APPROVED: DATE

PLANS PREPARED BY:
CIVILTEC engineering inc.
*General Civil, Municipal, Water and Wastewater Engineering, Planning, Construction Management and Surveying*
118 West Lime Avenue
Monrovia, Ca. 91016
Phone: (626) 357-0588
Fax: (626) 303-7957

Battelle
*The Business of Innovation*

CITY OF PASADENA INCORPORATED JUNE 1886

D.S.-209 & 210A

| DATE | SCALE | PASADENA WATER & POWER CITY OF PASADENA | SHEET NO. 42 OF 79 SHEETS |
|---|---|---|---|
| FEBRUARY 2009 | AS SHOWN | | |
| DRAWN BY CIVILTEC | | MONK HILL TREATMENT SYSTEM | WORK ORDER 02557 / FILE NUMBER E-1670 |
| DESIGNED BY CIVILTEC | | PUMP AND MECHANICAL SCHEDULE | |
| CHECKED BY CIVILTEC | | | |
| SUBMITTED BY CIVILTEC | | | |
| FIELD BOOKS / CALC BOOKS | | APPROVED / APPROVED | REVISION |

X:\20075-27140-JR_MONHILL TREATMENT PLANT\DWG\SUBMITTALS\FINAL SUBMITTAL\27140-SCH-103.DWG (02-27-09 9:25:50AM)

INSTRUMENTATION EQUIPMENT SCHEDULE

| I # | PROCESS NO | LOCATION | SERVICE | MAKE & MODEL | REMARKS |
|---|---|---|---|---|---|
| FS-100 | | BOOSTER STATION | SUMP OVERFLOW INDICATOR TO SPREADING GROUNDS | | CONTRACTOR FURNISHED |
| FIT-100 | | BOOSTER STATION | PUMP DISCHARGE FLOW TRANSMITTER | ROSEMOUNT O.A.E. | CONTRACTOR FURNISHED |
| FIT-102 | | WINDSOR WELL | WELL DISCHARGE FLOWTRANSMITTER | | BY OTHERS |
| FIT-103 | | VENTURA WELL | WELL DISCHARGE FLOWTRANSMITTER | 1 | BY OTHERS |
| FIT-104 | | ARROYO WELL | WELL DISCHARGE FLOWTRANSMITTER | ROSEMOUNT O.A.E. | CONTRACTOR FURNISHED |
| FIT-105 | | WELL No. 52 | WELL DISCHARGE FLOWTRANSMITTER | | BY OTHERS |
| LIT-100 | | BOOSTER STATION | SONIC TRANSMITTER | MILLTRONICS HYDRORANGER | CONTRACTOR FURNISHED |
| LIT-101 | | BOOSTER STATION | SUMP LEVEL TRANSMITTER 1 | KPSI SERIES 750 O.A.E | CONTRACTOR FURNISHED |
| LIT-102 | | WINDSOR WELL | WELL LEVEL TRANSMITTER | | BY OTHERS |
| LIT-103 | | VENTURA WELL | WELL LEVEL TRANSMITTER | | BY OTHERS |
| LIT-104 | | ARROYO WELL | WELL LEVEL TRANSMITTER | | BY OTHERS |
| LIT-105 | | WELL No. 52 | WELL LEVEL TRANSMITTER | | BY OTHERS |
| FIT-501 | | BACKWASH DISCHARGE | FLOW TRANSMITTER | TIGER MAG O.A.E | CONTRACTOR FURNISHED |
| LS-101 | | BOOSTER STATION | LOW SUMP LEVEL FLOAT 1 | ROTO-FLOAT O.A.E | CONTRACTOR FURNISHED |
| PIT-100 | | BOOSTER STATION | PUMP DISCHARGE PRESURE TRANSMITTER | ROSEMOUNT O.A.E. 1 | CONTRACTOR FURNISHED |
| PI-100 | | BOOSTER STATION | PUMP DISCHARGE INDICATOR | WIKA 0-200 PSI | CONTRACTOR FURNISHED |
| PI-102 | | WINDSOR WELL | WELL DISCHARGE PRESSURE INDICATOR | | BY OTHERS |
| PI-103 | | VENTURA WELL | WELL DISCHARGE PRESSURE INDICATOR | | BY OTHERS |
| PI-104 | | ARROYO WELL | WELL DISCHARGE PRESSURE INDICATOR | | BY OTHERS |
| PI-105 | | WELL No. 52 | WELL DISCHARGE PRESSURE INDICATOR | | BY OTHERS |
| LS-102 | | BOOSTER STATION | HIGH SUMP LEVEL FLOAT 1 | ROTO-FLOAT O.A.E | CONTRACTOR FURNISHED |
| PIT-200 | | INFLUENT FILTERS | PRESSURE TRANSMITTER | | CALGON CARBON |
| PDIT-201 | | INFLUENT FILTERS | DIFFERENTIAL PRESSURE TRANSMITTER | | CALGON CARBON |
| PI-202 | | FILTERED EFFLUENT | PRESSURE TRANSMITTER | | CALGON CARBON |
| PDIT-301A | | FILTERED INFLUENT TO IX LEAD VESSELS | DIFFERENTIAL PRESSURE INDICATOR | | CALGON CARBON |
| PI-301AA | | FILTERED INFLUENT TO IX LEAD VESSELS | PRESSURE INDICATOR | | CALGON CARBON |
| PI-301A | | IX TREATED EFFLUENT WATER FROM VESSEL | PRESSURE INDICATOR | | CALGON CARBON |
| FIT-301A | | IX TREATED EFFLUENT WATER TO LAG VESSEL | FLOW TRANSMITTER | | CALGON CARBON |
| FIE-301A | | PRESSURE RUPTURE DISK | | | CALGON CARBON |
| PDIT-301B | | IX TREATED EFFLUENT WATER | DIFFERENTIAL PRESSURE TRANSMITTER | | CALGON CARBON |
| PI-301B | | IX TREATED EFFLUENT WATER | PRESSURE INDICATOR | | CALGON CARBON |
| FIT-301B | | IX TREATED EFFLUENT WATER TO LEAD VESSEL | FLOW TRANSMITTER | | CALGON CARBON |
| FIE-301B | | PRESSURE RUPTURE DISK | FLOW ELEMENT | | CALGON CARBON |
| PDIT-302A | | FILTERED INFLUENT TO IX LEAD VESSELS | DIFFERENTIAL PRESSURE INDICATOR | | CALGON CARBON |
| PI-302AA | | FILTERED INFLUENT TO IX LEAD VESSELS | PRESSURE INDICATOR | | CALGON CARBON |
| PI-302A | | IX TREATED EFFLUENT WATER FROM LEAD VESSEL | PRESSURE INDICATOR | | CALGON CARBON |
| FIT-302A | | IX TREATED EFFLUENT WATER TO LAG VESSEL | FLOW TRANSMITTER | | CALGON CARBON |
| FIE-302A | | PRESSURE RUPTURE DISK | FLOW ELEMENT | | CALGON CARBON |
| PDIT-302B | | IX TREATED EFFLUENT WATER | DIFFERENTIAL PRESSURE TRANSMITTER | | CALGON CARBON |
| PI-302B | | IX TREATED EFFLUENT WATER | PRESSURE INDICATOR | | CALGON CARBON |
| FIT-302B | | IX TREATED EFFLUENT WATER TO LEAD VESSEL | FLOW TRANSMITTER | | CALGON CARBON |
| FIE-302B | | PRESSURE RUPTURE DISK | FLOW ELEMENT | | CALGON CARBON |
| PDIT-303A | | FILTERED INFLUENT TO IX LEAD VESSELS | DIFFERENTIAL PRESSURE INDICATOR | | CALGON CARBON |
| PI-303AA | | FILTERED INFLUENT TO IX LEAD VESSELS | PRESSURE INDICATOR | | CALGON CARBON |
| PI-303A | | IX TREATED EFFLUENT WATER FROM LEAD VESSEL | PRESSURE INDICATOR | | CALGON CARBON |
| FIT-303A | | IX TREATED EFFLUENT WATER TO LAG VESSEL | FLOW TRANSMITTER | | CALGON CARBON |
| FIE-303A | | PRESSURE RUPTURE DISK | FLOW ELEMENT | | CALGON CARBON |
| PDIT-303B | | IX TREATED EFFLUENT WATER | DIFFERENTIAL PRESSURE TRANSMITTER | | CALGON CARBON |
| PI-303B | | IX TREATED EFFLUENT WATER | PRESSURE INDICATOR | | CALGON CARBON |
| FIT-303B | | IX TREATED EFFLUENT WATER TO LEAD VESSEL | FLOW TRANSMITTER | | CALGON CARBON |
| FIE-303B | | PRESSURE RUPTURE DISK | FLOW ELEMENT | | CALGON CARBON |
| PDIT-304A | | FILTERED INFLUENT TO IX LEAD VESSELS | DIFFERENTIAL PRESSURE INDICATOR | | CALGON CARBON |
| PI-304AA | | FILTERED INFLUENT TO IX LEAD VESSELS | PRESSURE INDICATOR | | CALGON CARBON |
| PI-304A | | IX TREATED EFFLUENT WATER FROM LEAD VESSEL | PRESSURE INDICATOR | | CALGON CARBON |
| FIT-304A | | IX TREATED EFFLUENT WATER TO LAG VESSEL | FLOW TRANSMITTER | | CALGON CARBON |
| FIE-304A | | PRESSURE RUPTURE DISK | FLOW ELEMENT | | CALGON CARBON |

INSTRUMENTATION EQUIPMENT SCHEDULE

| I # | PROCESS NO | LOCATION | SERVICE | MAKE & MODEL | REMARKS |
|---|---|---|---|---|---|
| PDIT-304B | | IX TREATED EFFLUENT WATER | DIFFERENTIAL PRESSURE TRANSMITTER | | CALGON CARBON |
| PI-304B | | IX TREATED EFFLUENT WATER | PRESSURE INDICATOR | | CALGON CARBON |
| FIT-304B | | IX TREATED EFFLUENT WATER TO LEAD VESSEL | FLOW TRANSMITTER | | CALGON CARBON |
| FIE-304B | | PRESSURE RUPTURE DISK | FLOW ELEMENT | | CALGON CARBON |
| PDIT-401A | | FILTERED INFLUENT TO LGAC LEAD VESSELS | DIFFERENTIAL PRESSURE INDICATOR | | CALGON CARBON |
| PI-401AA | | FILTERED INFLUENT TO LGAC LEAD VESSELS | PRESSURE INDICATOR | | CALGON CARBON |
| PI-401A | | LGAC TREATED EFFLUENT WATER FROM LEAD VESSEL | PRESSURE INDICATOR | | CALGON CARBON |
| FIT-401A | | LGAC TREATED EFFLUENT WATER TO LAG VESSEL | FLOW TRANSMITTER | | CALGON CARBON |
| FIE-401A | | PRESSURE RUPTURE DISK | FLOW ELEMENT | | CALGON CARBON |
| PDIT-401B | | LGAC TREATED EFFLUENT WATER | DIFFERENTIAL PRESSURE TRANSMITTER | | CALGON CARBON |
| PI-401B | | LGAC TREATED EFFLUENT WATER | PRESSURE INDICATOR | | CALGON CARBON |
| FIT-401B | | LGAC TREATED EFFLUENT WATER TO LEAD VESSEL | FLOW TRANSMITTER | | CALGON CARBON |
| FIE-401B | | PRESSURE RUPTURE DISK | FLOW ELEMENT | | CALGON CARBON |
| PDIT-402A | | FILTERED INFLUENT TO LGAC LEAD VESSELS | DIFFERENTIAL PRESSURE INDICATOR | | CALGON CARBON |
| PI-402AA | | FILTERED INFLUENT TO LGAC LEAD VESSELS | PRESSURE INDICATOR | | CALGON CARBON |
| PI-402A | | LGAC TREATED EFFLUENT WATER FROM LEAD VESSEL | PRESSURE INDICATOR | | CALGON CARBON |
| FIT-402A | | LGAC TREATED EFFLUENT WATER TO LAG VESSEL | FLOW TRANSMITTER | | CALGON CARBON |
| FI-402A | | LGAC TREATED EFFLUENT WATER TO LAG VESSEL | FLOW INDICATOR | | CALGON CARBON |
| FIE-402A | | PRESSURE RUPTURE DISK | FLOW ELEMENT | | CALGON CARBON |
| PDIT-402B | | LGAC TREATED EFFLUENT WATER | DIFFERENTIAL PRESSURE TRANSMITTER | | CALGON CARBON |
| PI-402B | | LGAC TREATED EFFLUENT WATER | PRESSURE INDICATOR | | CALGON CARBON |
| FIT-402B | | LGAC TREATED EFFLUENT WATER TO LEAD VESSEL | FLOW TRANSMITTER | | CALGON CARBON |
| FIE-402B | | PRESSURE RUPTURE DISK | FLOW ELEMENT | | CALGON CARBON |
| PDIT-403A | | FILTERED INFLUENT TO IX LEAD VESSELS | DIFFERENTIAL PRESSURE INDICATOR | | CALGON CARBON |
| PI-403AA | | FILTERED INFLUENT TO LGAC LEAD VESSELS | PRESSURE INDICATOR | | CALGON CARBON |
| PI-403A | | LGAC TREATED EFFLUENT WATER FROM LEAD VESSEL | PRESSURE INDICATOR | | CALGON CARBON |
| FIT-403A | | LGAC TREATED EFFLUENT WATER TO LAG VESSEL | FLOW TRANSMITTER | | CALGON CARBON |
| FIE-403A | | PRESSURE RUPTURE DISK | FLOW ELEMENT | | CALGON CARBON |
| PDIT-403B | | LGAC TREATED EFFLUENT WATER | DIFFERENTIAL PRESSURE TRANSMITTER | | CALGON CARBON |
| PI-403B | | LGAC TREATED EFFLUENT WATER | PRESSURE INDICATOR | | CALGON CARBON |
| FIT-403B | | LGAC TREATED EFFLUENT WATER TO LEAD VESSEL | FLOW TRANSMITTER | | CALGON CARBON |
| FIE-403B | | PRESSURE RUPTURE DISK | FLOW ELEMENT | | CALGON CARBON |
| PDIT-404A | | FILTERED INFLUENT TO LGAC LEAD VESSELS | DIFFERENTIAL PRESSURE INDICATOR | | CALGON CARBON |
| PI-404AA | | FILTERED INFLUENT TO LGAC LEAD VESSELS | PRESSURE INDICATOR | | CALGON CARBON |
| PI-404A | | LGAC TREATED EFFLUENT WATER FROM LEAD VESSEL | PRESSURE INDICATOR | | CALGON CARBON |
| FIT-404A | | LGAC TREATED EFFLUENT WATER TO LAG VESSEL | FLOW TRANSMITTER | | CALGON CARBON |
| FIE-404A | | PRESSURE RUPTURE DISK | FLOW ELEMENT | | CALGON CARBON |
| PDIT-404B | | LGAC TREATED EFFLUENT WATER | DIFFERENTIAL PRESSURE TRANSMITTER | | CALGON CARBON |
| PI-404B | | LGAC TREATED EFFLUENT WATER | PRESSURE INDICATOR | | CALGON CARBON |
| FIT-404B | | LGAC TREATED EFFLUENT WATER TO LEAD VESSEL | FLOW TRANSMITTER | | CALGON CARBON |
| FIE-404B | | PRESSURE RUPTURE DISK | FLOW ELEMENT | | CALGON CARBON |
| PDIT-405A | | FILTERED INFLUENT TO LGAC LEAD VESSELS | DIFFERENTIAL PRESSURE INDICATOR | | CALGON CARBON |
| PI-405AA | | FILTERED INFLUENT TO LGAC LEAD VESSELS | PRESSURE INDICATOR | | CALGON CARBON |
| PI-405A | | LGAC TREATED EFFLUENT WATER FROM LEAD VESSEL | PRESSURE INDICATOR | | CALGON CARBON |
| FIT-405A | | LGAC TREATED EFFLUENT WATER TO LAG VESSEL | FLOW TRANSMITTER | | CALGON CARBON |
| FIE-405A | | PRESSURE RUPTURE DISK | FLOW ELEMENT | | CALGON CARBON |
| PDIT-405B | | LGAC TREATED EFFLUENT WATER | DIFFERENTIAL PRESSURE TRANSMITTER | | CALGON CARBON |
| PI-405B | | LGAC TREATED EFFLUENT WATER | PRESSURE INDICATOR | | CALGON CARBON |
| FIT-405B | | LGAC TREATED EFFLUENT WATER TO LEAD VESSEL | FLOW TRANSMITTER | | CALGON CARBON |
| FIE-405B | | PRESSURE RUPTURE DISK | FLOW ELEMENT | | CALGON CARBON |
| FIT-500 | | MAGMETER – CLEAN WATER TO WINDSOR RESERVOIR | FLOW TRANSMITTER | TIGER MAG O.A.E | CONTRACTOR FURNISHED |
| FIT-502 | | MAGMETER – DISCHARGE WATER TO SAND BOX | FLOW TRANSMITTER | TIGER MAG O.A.E | CONTRACTOR FURNISHED 1 |
| PIT-102 | | WINDSOR WELL | PRESSURE TRANSMITTER | | BY OTHERS |
| PIR-103 | | VENTURA WELL | PRESSURE TRANSMITTER | 1 | BY OTHERS |
| PIT-104 | | ARROYO WELL | PRESSURE TRANSMITTER | | BY OTHERS |
| PIT-105 | | WELL 52 | PRESSURE TRANSMITTER | | BY OTHERS |

INSTRUMENTATION EQUIPMENT SCHEDULE

| I # | LOCATION | SERVICE | REMARKS |
|---|---|---|---|
| FIT-503 | BACKWASH SUPPLY | FLOW TRANSMITTER 1 | BY OTHERS |

SCH-104

REVISION

| NO. | DESCRIPTION | DATE |
|---|---|---|
| 1 | BUILDING DEPARTMENT PLAN CHECK COMMENTS | 01/05/09 |

REGISTERED PROFESSIONAL ENGINEER CHRISTOPHER SHEM HAWES 69578 CIVIL STATE OF CALIFORNIA 02/25/2010

APPROVED BY: CHRISTOPHER SHEM HAWES RCE 69578 — DATE 2/25/08
APPROVED: — DATE
APPROVED: — DATE

PLANS PREPARED BY:
CIVILTEC engineering inc.
*General Civil, Municipal, Water and Wastewater Engineering, Planning, Construction Management and Surveying*
118 West Lime Avenue
Monrovia, Ca. 91016
Phone: (626) 357-0588
Fax: (626) 303-7957

Battelle
*The Business of Innovation*

CITY OF PASADENA INCORPORATED JUNE 1886

D.S.-209 & 210A

| | | | |
|---|---|---|---|
| DATE FEBRUARY 2009 | SCALE AS SHOWN | PASADENA WATER & POWER CITY OF PASADENA | SHEET NO 43 OF 79 SHEETS |
| DRAWN BY CIVILTEC; DESIGNED BY CIVILTEC; CHECKED BY CIVILTEC; SUBMITTED BY CIVILTEC | | MONK HILL TREATMENT SYSTEM INSTRUMENTATION SCHEDULE | WORK ORDER 02557 / FILE NUMBER E-1670 |
| FIELD BOOKS / CALC BOOKS | | APPROVED / APPROVED | REVISION |

X:\2007\27140-JPL MONHILL TREATMENT PLANT\DWG\SUBMITTALS\FINAL SUBMITTAL\27140-SCH-104.DWG (02-27-09 9:25:45AM)

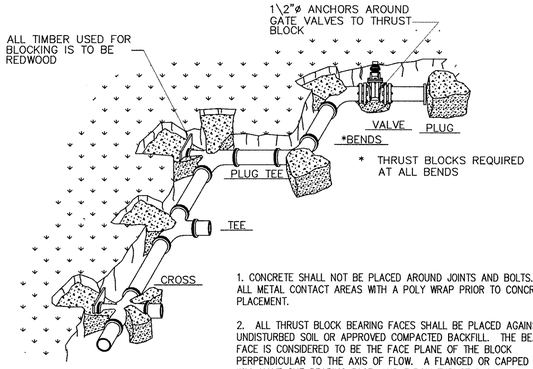


1. CONCRETE SHALL NOT BE PLACED AROUND JOINTS AND BOLTS. COVER ALL METAL CONTACT AREAS WITH A POLY WRAP PRIOR TO CONCRETE PLACEMENT.

2. ALL THRUST BLOCK BEARING FACES SHALL BE PLACED AGAINST UNDISTURBED SOIL OR APPROVED COMPACTED BACKFILL. THE BEARING FACE IS CONSIDERED TO BE THE FACE PLANE OF THE BLOCK PERPENDICULAR TO THE AXIS OF FLOW. A FLANGED OR CAPPED PIPE END WILL HAVE ONE BEARING FACE, AND ELBOW THRUST BLOCK WILL HAVE TOW, A TEE WILL HAVE THREE, AND A CROSS WILL HAVE FOUR, EACH OF WHICH MUST MEET THE TABLE REQUIREMENTS. FLOW IS CONSIDERED TO BE IN BOTH DIRECTIONS FOR STRAIGHT THROUGH IN LINE COMPONENTS SUCH AS VALVES, REDUCERS, AND ETC., WHICH THEREFORE HAVE A MINIMUM OF TWO BEARING FACES.

3. SQUARE ALL EDGES TO RECEIVE CONCRETE. THRUST BLOCKS SHALL BE GENERALLY CUBIC IN CONFIGURATION.

4. CALCULATED WITH AN ALLOWABLE BEARING PRESSURE OF 1500 LBS. PER SQ. FT.

5. ALL FITTINGS AND VALVES SHALL BE ANCHORED WITH TWO #5 REBAR.

6. CENTER ALL FITTINGS OVER THRUST BLOCKS.

7. ALL REBAR SHALL BE FUSION BONDED EPOXY COATED AFTER IT HAS BEEN SHAPED OR BENT TO FIT.

THRUST BLOCK BEARING AREA IN SQ. FT. @150 PSI GAUGE

| PIPE SIZE | CROSS | TEE | WYE | DEAD END | VALVE | 90° BEND | 45° BEND | 22.5° BEND | 11.25° BEND |
|---|---|---|---|---|---|---|---|---|---|
| 4 | 2.7 | 1.9 | 1.9 | 1.9 | – | 2.7 | 1.5 | 1.1 | 1.1 |
| 6 | 6.1 | 4.3 | 4.3 | 4.3 | – | 6.1 | 3.3 | 1.7 | 1.1 |
| 8 | 10.8 | 7.7 | 7.7 | 7.7 | – | 10.8 | 5.8 | 3.0 | 1.6 |
| 10 | 16.9 | 11.9 | 11.9 | 11.9 | – | 16.9 | 9.1 | 4.7 | 2.4 |
| 12 | 24.2 | 17.1 | 17.1 | 17.1 | 17.1 | 24.2 | 13.2 | 6.8 | 3.4 |
| 14 | 33.0 | 23.3 | 23.3 | 23.3 | 23.3 | 33.0 | 17.9 | 9.1 | 4.6 |
| 16 | 43.0 | 30.4 | 30.4 | 30.4 | 30.4 | 43.0 | 23.3 | 11.9 | 6.0 |
| 18 | 54.5 | 38.5 | 38.5 | 38.5 | 38.5 | 54.5 | 29.5 | 15.1 | 7.5 |
| 20 | 67.2 | 47.5 | 47.5 | 47.5 | 47.5 | 67.2 | 36.3 | 18.6 | 9.3 |
| 24 | 96.6 | 68.4 | 68.4 | 68.4 | 68.4 | 96.6 | 52.3 | 26.7 | 13.4 |

THRUST BLOCK BEARING AREA IN SQ. FT. @200 PSI GAUGE

| PIPE SIZE | CROSS | TEE | WYE | DEAD END | VALVE | 90° BEND | 45° BEND | 22.5° BEND | 11.25° BEND |
|---|---|---|---|---|---|---|---|---|---|
| 4 | 2.4 | 1.7 | 1.7 | 1.7 | – | 2.4 | 1.3 | 1.0 | 1.0 |
| 6 | 5.4 | 3.8 | 3.8 | 3.8 | – | 5.4 | 2.9 | 1.5 | 1.0 |
| 8 | 9.6 | 6.8 | 6.8 | 6.8 | – | 9.6 | 5.2 | 2.7 | 1.4 |
| 10 | 15.0 | 10.6 | 10.6 | 10.6 | | 15.0 | 8.1 | 4.2 | 2.1 |
| | 21.5 | 15.2 | | | | | | | |
| | 29.3 | 20.7 | | | | | | | |
| | 38.2 | 27.0 | | | | | | | |
| | 48.4 | 34.2 | | | | | | | |
| | 59.7 | 42.2 | | | | | | | |
| | 85.9 | 60.8 | | | | | | | |

THRUST BLOCK BEARING AREA IN SQ. FT. @500 PSI GAUGE

| PIPE SIZE | CROSS | TEE | WYE | END | VALVE | BEND | BEND | BEND | BEND |
|---|---|---|---|---|---|---|---|---|---|
| 4 | 6 | 4.25 | 4.25 | 4.25 | | 6 | 3.25 | 2.5 | 2.5 |
| | 13.5 | 9.5 | | | | | | | |
| | 24 | 17 | | | | | | | |
| | 37.5 | 26.5 | | | | | | | |
| | 53.75 | 38 | | | | | | | |
| | 73.25 | 51.75 | | | | | | | |
| | 95.5 | 67.5 | | | | | | | |
| | 121 | 85.5 | | | | | | | |
| | 149.25 | 105.5 | | | | | | | |
| | 214.75 | 152 | | | | | | | |

THRUST BLOCK DETAIL (1)
NOT TO SCALE

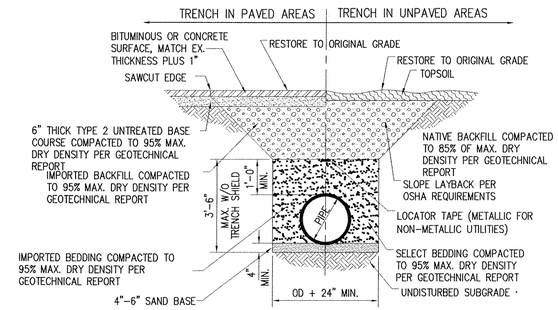


TYPICAL TRENCH DETAIL (2)
NOT TO SCALE

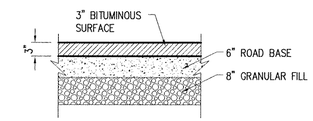


TYPICAL ROADWAY SECTION (3)
NOT TO SCALE

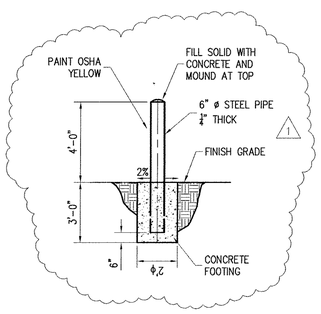


PIPE BOLLARD DETAIL (4)
NOT TO SCALE

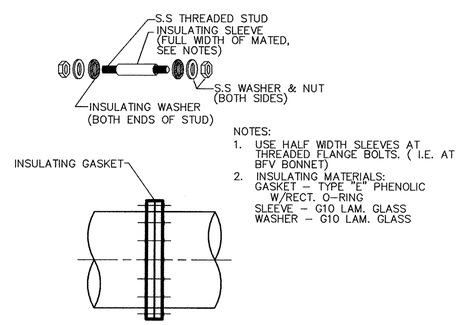


NOTES:
1. USE HALF WIDTH SLEEVES AT THREADED FLANGE BOLTS. ( I.E. AT BFV BONNET)
2. INSULATING MATERIALS:
GASKET – TYPE "E" PHENOLIC W/RECT. O-RING
SLEEVE – G10 LAM. GLASS
WASHER – G10 LAM. GLASS

INSULATING FLANGE KIT (5)
NOT TO SCALE

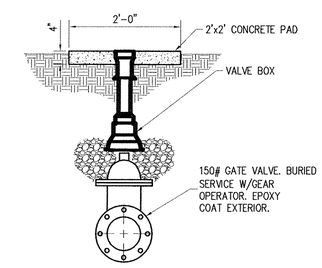


NOTE:
PROVIDE PROTECTIVE COATING TO EXTERIOR SURFACE OF VALVE BODY AND PROVIDE STAINLESS STEEL NUTS AND BOLTS

BURIED GATE VALVE DETAIL (6)
NOT TO SCALE

DT-101

REVISION

| NO. | DESCRIPTION | DATE |
|---|---|---|
| 1 | BUILDING DEPARTMENT PLAN CHECK COMMENTS | 01/05/09 |

REGISTERED PROFESSIONAL ENGINEER CHRISTOPHER SHEM HAWES 69578 CIVIL STATE OF CALIFORNIA

APPROVED BY: C. Shem Hawes 69578 — CHRISTOPHER SHEM HAWES RCE — 2/25/08 DATE
APPROVED: — DATE
APPROVED: — DATE

PLANS PREPARED BY:
CIVILTEC engineering inc.
*General Civil, Municipal, Water and Wastewater Engineering, Planning, Construction Management and Surveying*
118 West Lime Avenue
Monrovia, Ca. 91016
Phone: (626) 357-0588
Fax: (626) 303-7957

Battelle
The Business of Innovation

CITY OF PASADENA INCORPORATED JUNE 1886

D.S.–209 & 210A

| DATE | SCALE | PASADENA WATER & POWER CITY OF PASADENA | SHEET NO 44 OF 79 SHEETS |
|---|---|---|---|
| FEBRUARY 2009 | AS SHOWN | | |
| DRAWN BY CIVILTEC | | MONK HILL TREATMENT SYSTEM GENERAL DETAILS | WORK ORDER 02557 / FILE NUMBER E-1670 |
| DESIGNED BY CIVILTEC | | | |
| CHECKED BY CIVILTEC | | | |
| SUBMITTED BY CIVILTEC | | | |
| FIELD BOOKS | CALC BOOKS | APPROVED / APPROVED | REVISION |

X:\2007\27140-PD_MONKHILL TREATMENT PLANT\DWG\SUBMITTALS\FINAL SUBMITTAL\27140-GENERAL DETAIL-DT-101.DWG (02-27-09 9:27:21AM)

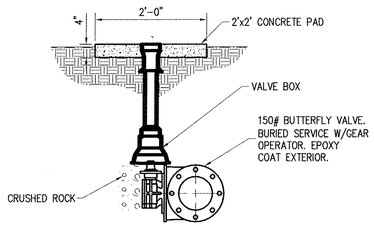


NOTE:
PROVIDE PROTECTIVE COATING TO EXTERIOR SURFACE OF VALVE BODY AND PROVIDE STAINLESS STEEL NUTS AND BOLTS

## BURIED BUTTERFLY VALVE DETAIL (1)
NOT TO SCALE

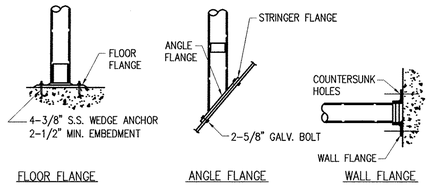


NOTE
USE THIS DETAIL WHERE WALL THICKNESS IS LESS THAN 8".

## RAILING GUARDRAIL & HANDRAIL SUPPORT (2)
NOT TO SCALE

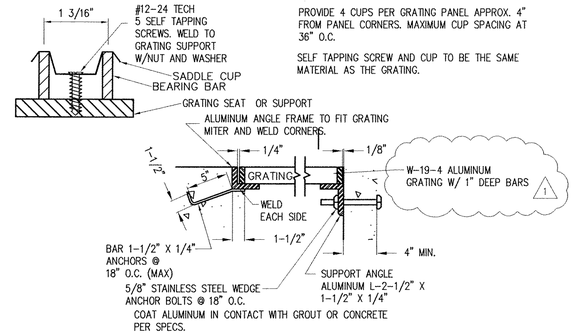


PROVIDE 4 CUPS PER GRATING PANEL APPROX. 4" FROM PANEL CORNERS. MAXIMUM CUP SPACING AT 36" O.C.

SELF TAPPING SCREW AND CUP TO BE THE SAME MATERIAL AS THE GRATING.

## ALUMINUM GRATING DETAIL (3)
NOT TO SCALE

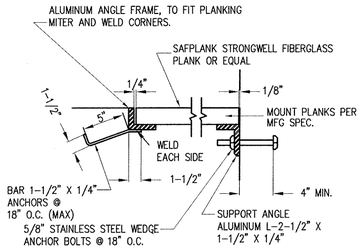


## FIBERGLASS PLANK DETAIL (4)
NOT TO SCALE

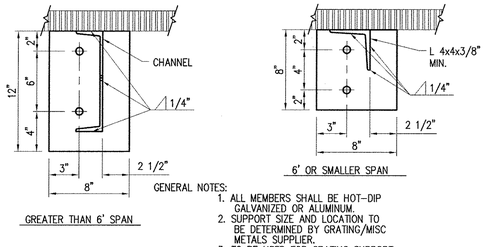


GENERAL NOTES:
1. ALL MEMBERS SHALL BE HOT-DIP GALVANIZED OR ALUMINUM.
2. SUPPORT SIZE AND LOCATION TO BE DETERMINED BY GRATING/MISC METALS SUPPLIER.
3. TO BE USED FOR GRATING SUPPORT WHERE IMBEDS ARE NOT APPLICABLE. OR AVAILABLE.
4. ANCHOR BOLTS SHALL BE MIN. 5/8"ø S.S. AND 6" MIN. IMBED.

## GRATING/DIAMOND PLATE SUPPORT WALL CONNECTION (5)
NOT TO SCALE

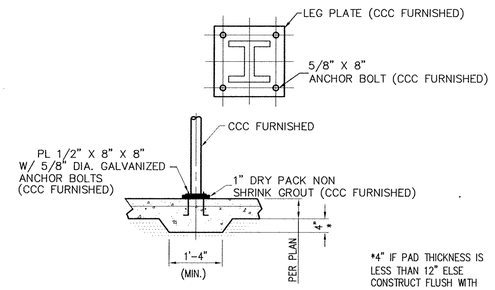


*4" IF PAD THICKNESS IS LESS THAN 12" ELSE CONSTRUCT FLUSH WITH PAD BOTTOM.

## WALKWAY SUPPORT (6)
NOT TO SCALE

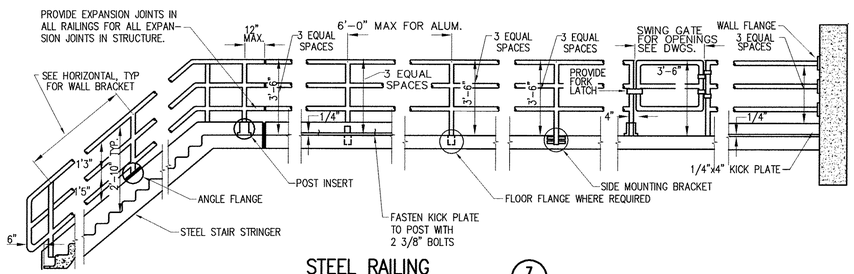


## STEEL RAILING (7)
NOT TO SCALE

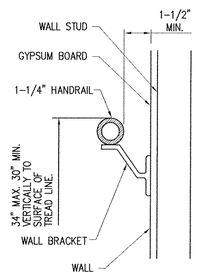


## HANDRAIL WALL BRACKET (8)
NOT TO SCALE

DT-102

| REVISION | | |
|---|---|---|
| NO. | DESCRIPTION | DATE |
| 1 | BUILDING DEPARTMENT PLAN CHECK COMMENTS | 01/05/09 |

REGISTERED PROFESSIONAL ENGINEER CHRISTOPHER SHEM HAWES 69578 CIVIL STATE OF CALIFORNIA 6/30/2010

APPROVED BY: CHRISTOPHER SHEM HAWES RCE 69578 — DATE 2/25/08
APPROVED: — DATE
APPROVED: — DATE

PLANS PREPARED BY:
CIVILTEC engineering inc.
*General Civil, Municipal, Water and Wastewater Engineering, Planning, Construction Management and Surveying*
118 West Lime Avenue
Monrovia, Ca. 91016
Phone: (626) 357-0588
Fax: (626) 303-7957

Battelle
*The Business of Innovation*

CITY OF PASADENA INCORPORATED JUNE 1886

D.S.-209 & 210A

| DATE | SCALE | PASADENA WATER & POWER CITY OF PASADENA | SHEET NO 45 OF 79 SHEETS |
|---|---|---|---|
| FEBRUARY 2009 | AS SHOWN | | |
| DRAWN BY CIVILTEC | | MONK HILL TREATMENT SYSTEM GENERAL DETAILS | WORK ORDER 02557 / FILE NUMBER E-1670 |
| DESIGNED BY CIVILTEC | | | |
| CHECKED BY CIVILTEC | | | |
| SUBMITTED BY CIVILTEC | | | |
| FIELD BOOKS | CALC BOOKS | APPROVED / APPROVED | REVISION |

X:\2007\27140-JB, MONHILL TREATMENT PLANT\DWG\SUBMITTALS\FINAL SUBMITTAL\27140-GENERAL DETAIL-DT-102.DWG (02-27-09 9:28:03AM)

NOTES
1. USE BASE PL OF SAME METAL AS STRINGER.
2. PROVIDE PROTECTION FOR DISSIMILAR METALS AND CONCRETE AS SPECIFIED.
3. STAIR HANDRAIL NOT SHOWN.
4. THICKEN SLAB TO 1'-0" DEPTH WHEN CONNECTING TO CONCRETE SLABS TYP.
5. USE C10x(15.3) GALVANIZED STEEL STRINGERS OR C12x7.41 ALUMINUM STRINGERS U.N.O.

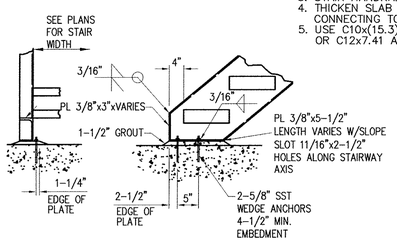


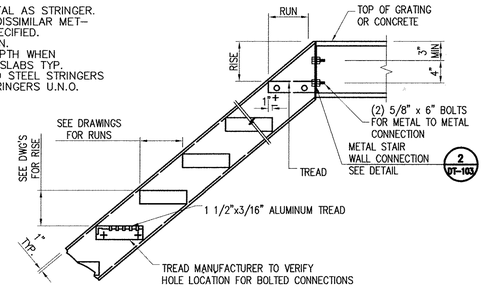


## STANDARD METAL STAIR DETAIL (1)
NOT TO SCALE

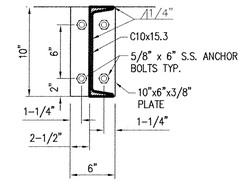


## METAL STAIR WALL CONNECTION (2)
NOT TO SCALE

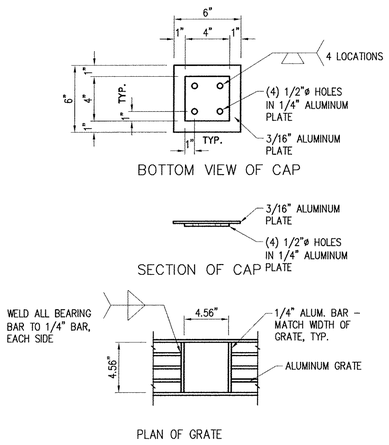


## GRATE PENETRATION W/ CAP DETAIL (3)
NOT TO SCALE

## NOT USED (4)
NOT TO SCALE

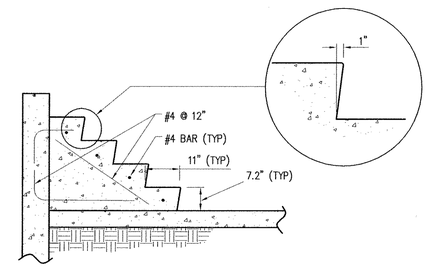


## CONCRETE STAIR DETAIL (5)
NOT TO SCALE

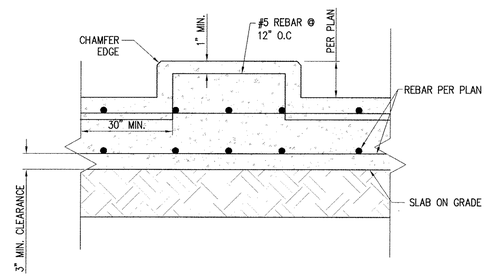


## EQUIPMENT PAD (6)
NOT TO SCALE
TPS-102

ALL EXPOSED CONCRETE CORNERS TO BE CHAMFERED

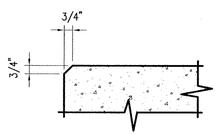


## TYPICAL CONCRETE CHAMFER DETAIL (7)
NOT TO SCALE

DT-103

| REVISION | | |
|---|---|---|
| NO. | DESCRIPTION | DATE |
| | | |

REGISTERED PROFESSIONAL ENGINEER CHRISTOPHER SHEM HAWES 69578 6/30/2010 CIVIL STATE OF CALIFORNIA

APPROVED BY: C. Shem Hawes 69578 CHRISTOPHER SHEM HAWES RCE — DATE 2/25/08
APPROVED: — DATE
APPROVED: — DATE

PLANS PREPARED BY:
CIVILTEC engineering inc.
*General Civil, Municipal, Water and Wastewater Engineering, Planning, Construction Management and Surveying*
118 West Lime Avenue
Monrovia, Ca. 91016
Phone: (626) 357-0588
Fax: (626) 303-7957

Battelle
*The Business of Innovation*

CITY OF PASADENA INCORPORATED JUNE 1886

D.S.-209 & 210A

| DATE | SCALE | PASADENA WATER & POWER CITY OF PASADENA | SHEET NO 46 OF 79 SHEETS |
|---|---|---|---|
| FEBRUARY 2009 | AS SHOWN | | |
| DRAWN BY CIVILTEC | | MONK HILL TREATMENT SYSTEM GENERAL DETAILS | WORK ORDER 02557 / FILE NUMBER E-1670 |
| DESIGNED BY CIVILTEC | | | |
| CHECKED BY CIVILTEC | | | |
| SUBMITTED BY CIVILTEC | | | |
| FIELD BOOKS / CALC BOOKS | | APPROVED / APPROVED | REVISION |

X:\2007\27140-02\ MONKHILL TREATMENT PLANT\DWG\SUBMITTAL\SUBMITTAL\27140-GENERAL DETAIL-DT-103.DWG (02-27-08 @ 28:35AM)

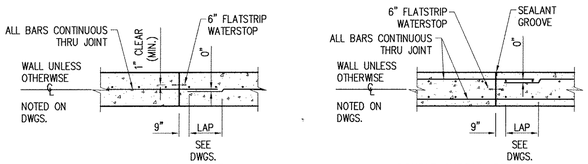


NOTE:

1. WATERSTOP AND SEALANT GROOVES TO BE PROVIDED IN ALL WATER RETAINING FLOORS.

2. WHERE WATERSTOP IS REQUIRED IN SINGLE CURTAIN WALL REINF. PLACE WATERSTOP ON WATER SIDE OF WALL.

3. WHEN WATERSTOP IS REQUIRED IN DOUBLE CURTAIN WALL REINFORCEMENT, PLACE SEALANT GROOVE AND SEALANT ON WATER SIDE OF WALL.

## WALL CONSTRUCTION JOINT DETAILS (1)

NOT TO SCALE

## NOT USED (2)

NOT TO SCALE

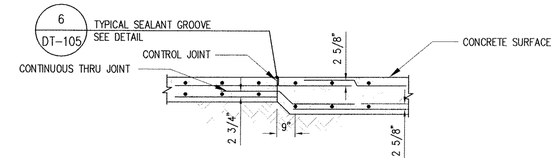


## CHANGE IN SLAB THICKNESS DETAIL

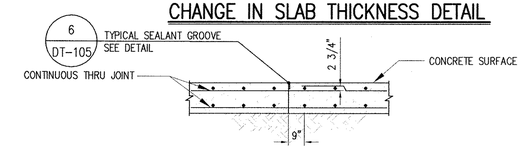


## FLOOR SLAB DETAIL

## SLAB CONTROL JOINT (3)

NOT TO SCALE

| NORMAL WEIGHT CONCRETE -fc' = 3000 PSI | | | | | | | | | |
|---|---|---|---|---|---|---|---|---|---|
| REINFORCEMENT BAR SPLICE LENGTHS | | | | | | | | | |
| TENSION SPLICE | BAR SIZE | #11 | #10 | #9 | #8 | #7 | #6 | #5 | #4 |
| CLASS "A" (TENSION SPLICE) | TOP | 8'-0" | 6'-6" | 5'-1" | 4'-0" | 3'-1" | 2'-3" | 1'-9" | 1'-5" |
| | BOTTOM | 5'-8" | 4'-8" | 3'-8" | 2'-11" | 2'-2" | 1'-7" | 1'-3" | 1'-0" |
| CLASS "B" | TOP | 10'-4" | 8'-5" | 6'-8" | 5'-3" | 4'-0" | 2'-11" | 2'-3" | 1'-10" |
| | BOTTOM | 7'-6" | 6'-0" | 4'-9" | 3'-9" | 2'-10" | 2'-1" | 1'-8" | 1'-4" |
| CLASS "C" | TOP | 13'-7" | 11'-0" | 8'-8" | 6'-10" | 5'-3" | 3'-10" | 3'-0" | 2'-5" |
| | BOTTOM | 9'-8" | 7'-11" | 6'-2" | 4'-11" | 3'-9" | 2'-9" | 2'-2" | 1'-8" |

NOTES:

1. TOP BAR REFERS TO HORIZONTAL REINFORCING WITH MORE THAN 12" OF CONCRETE BELOW BAR AND ALL HORIZONTAL WALL REINFORCING.

2. BOTTOM BAR REFERS TO HORIZONTAL REINFORCING WITH LESS THAN 12" OF CONCRETE BELOW BAR AND ALL VERTICAL REINFORCING.

3. FOR ALL TENSION DEVELOPMENT USE BOTTOM BAR LENGTHS FOR CLASS "A" SPLICE.

4. NO MORE THAN 1/2 THE TOTAL NUMBER OF BARS SHALL BE SPLICED IN ONE LOCATION, ADJACENT BAR SPLICES SHALL BE STAGGERED, LENGTH OF SPLICE 2'-0" MIN. TO CENTER LINE OF SPLICES. BAR SPLICES SHALL BE CLASS "B" UNLESS NOTED OTHERWISE.

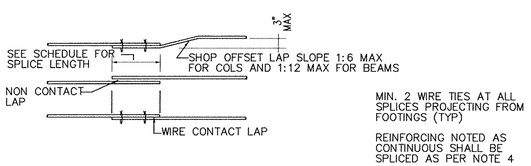


## REINFORCING LAP SCHEDULE (4)

NOT TO SCALE

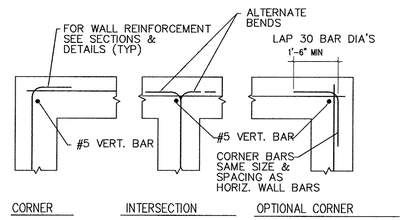


## SINGLE CURTAIN OF REBAR (5)

NOT TO SCALE

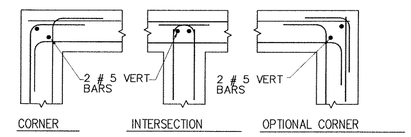


## DOUBLE CURTAIN OF REBAR (6)

NOT TO SCALE

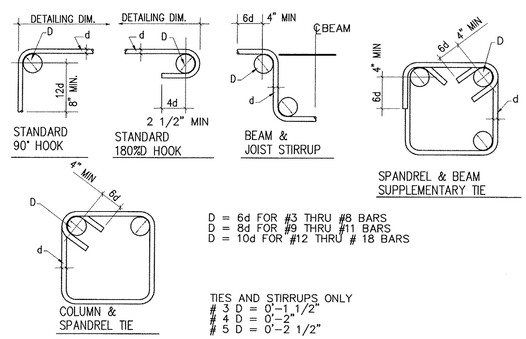


## BAR BENDING DETAILS (7)

NOT TO SCALE

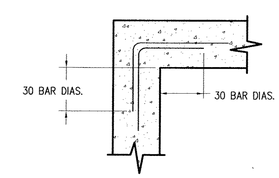


## HORIZONTAL WALL REINFORCING CORNER (8)

NOT TO SCALE

DT-104

| REVISION | | |
|---|---|---|
| NO. | DESCRIPTION | DATE |
| | | |

REGISTERED PROFESSIONAL ENGINEER CHRISTOPHER SHEM HAWES 69578 CIVIL STATE OF CALIFORNIA 6/30/2010

APPROVED BY: C. Shem Hawes 69578 CHRISTOPHER SHEM HAWES RCE — DATE 2/25/08
APPROVED: — DATE
APPROVED: — DATE

PLANS PREPARED BY: CIVILTEC engineering inc.

*General Civil, Municipal, Water and Wastewater Engineering, Planning, Construction Management and Surveying*

118 West Lime Avenue
Monrovia, Ca. 91016
Phone: (626) 357-0588
Fax: (626) 303-7957

Battelle
*The Business of Innovation*

CITY OF PASADENA INCORPORATED JUNE 1886

D.S.-209 & 210A

| DATE | SCALE | PASADENA WATER & POWER CITY OF PASADENA | SHEET NO 47 OF 79 SHEETS |
|---|---|---|---|
| FEBRUARY 2009 | AS SHOWN | MONK HILL TREATMENT SYSTEM GENERAL DETAILS | WORK ORDER 02557 / FILE NUMBER E-1670 |

DRAWN BY CIVILTEC
DESIGNED BY CIVILTEC
CHECKED BY CIVILTEC
SUBMITTED BY CIVILTEC

FIELD BOOKS | CALC BOOKS | APPROVED | APPROVED | REVISION

X:\2007\27140-PL MONKHILL TREATMENT PLANT\DWG\SUBMITTAL\FINAL SUBMITTAL\27140-GENERAL DETAIL-DT-104.DWG (02-27-09 9:29:12AM)

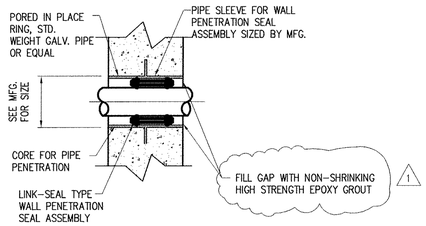


## LINK SEAL DETAIL (1)
NOT TO SCALE

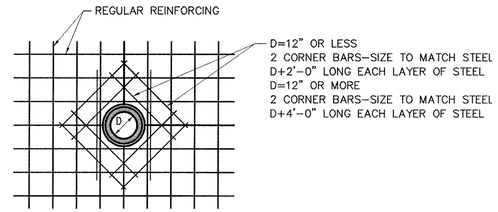


## PIPE WALL AND FLOOR PENETRATION EXTRA REINFORCING DETAIL (2)
NOT TO SCALE

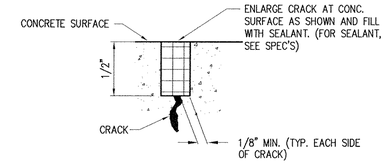


NOTE

PRIOR TO FILLING, STRUCTURES TO CONTAIN WATER SHALL HAVE ALL CRACKS REPAIRED AS SHOWN IN THIS DETAIL.

## CONCRETE CRACK REPAIR (3)
NOT TO SCALE

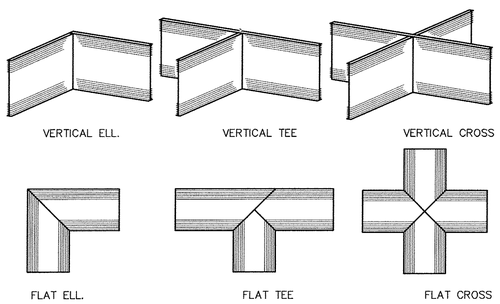


## FLATSTRIP WATERSTOPS (4)
NOT TO SCALE

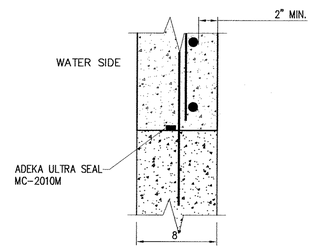


## HYDROPHILIC WATER STOP DETAIL (5)
NOT TO SCALE

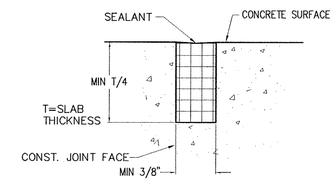


CONTROL JOINTS, EXPANSION JOINTS

## SEALANT GROOVE (6)
NOT TO SCALE

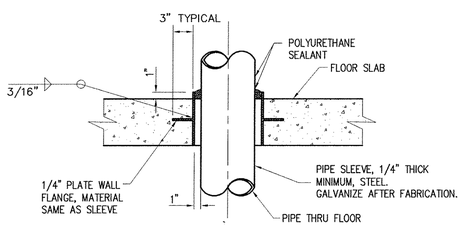


ALL FLOOR PENETRATIONS FOR HARD PIPING OF EQUIPMENT SHALL HAVE A FLOOR SLEEVE.

## FLOOR PIPE SLEEVE (7)
NOT TO SCALE

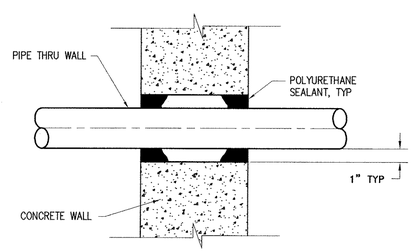


## WALL CORE DETAIL (8)
NOT TO SCALE

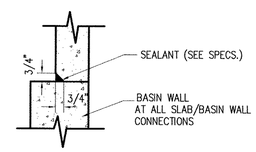


## CONCRETE CHAMFER AT SLAB/BASIN WALL DETAIL (9)
NOT TO SCALE

DT-105

| REVISION | | |
|---|---|---|
| NO. | DESCRIPTION | DATE |
| 1 | BUILDING DEPARTMENT PLAN CHECK COMMENTS | 01/05/09 |

REGISTERED PROFESSIONAL ENGINEER CHRISTOPHER SHEM HAWES 69578 6/30/2010 CIVIL STATE OF CALIFORNIA

APPROVED BY: CHRISTOPHER SHEM HAWES 69578 RCE — 2/25/08 DATE
APPROVED: — DATE
APPROVED: — DATE

PLANS PREPARED BY:
CIVILTEC engineering inc.
*General Civil, Municipal, Water and Wastewater Engineering, Planning, Construction Management and Surveying*
118 West Lime Avenue
Monrovia, Ca. 91016
Phone: (626) 357-0588
Fax: (626) 303-7957

Battelle
*The Business of Innovation*

CITY OF PASADENA INCORPORATED JUNE 1886

D.S.-209 & 210A

| DATE | SCALE | PASADENA WATER & POWER CITY OF PASADENA | SHEET NO 48 OF 79 SHEETS |
|---|---|---|---|
| FEBRUARY 2009 | AS SHOWN | | |
| DRAWN BY CIVILTEC | | MONK HILL TREATMENT SYSTEM GENERAL DETAILS | WORK ORDER 02557 / FILE NUMBER E-1670 |
| DESIGNED BY CIVILTEC | | | |
| CHECKED BY CIVILTEC | | | |
| SUBMITTED BY CIVILTEC | | | |
| FIELD BOOKS / CALC BOOKS | | APPROVED / APPROVED | REVISION |

X:\2007\27140-PL MONKHILL TREATMENT PLANT\DWGS\SUBMITTAL\SUBMITTAL\FINAL SUBMITTAL\27140-GENERAL DETAIL-DT-105.DWG (02-27-09 9:29:53AM)

| ELBOW | DIMENSION IN INCHES | | | |
|---|---|---|---|---|
| 'A' DIA | 'B' DIA | 'C' THICK | 'D' SQ | 'E' DIA |
| 4 | 2 | 3/8 | 6 | 5/8 |
| 6 | 2 1/2 | 3/8 | 7 | 5/8 |
| 8 | 4 | 1/2 | 9 | 5/8 |
| 10 | 4 | 1/2 | 9 | 5/8 |
| 12 | 6 | 1/2 | 11 | 3/4 |
| 14 | 6 | 1/2 | 11 | 3/4 |
| 16 | 6 | 1/2 | 11 | 5/8 |
| 18 | 8 | 1/2 | 11 | 3/4 |
| 20 | 8 | 1/2 | 13-1/2 | 3/4 |
| 24 | 8 | 1/2 | 13-1/2 | 3/4 |
| 30 | 10 | 3/4 | 16 | 7/8 |
| 36 | 12 | 3/4 | 19 | 7/8 |
| 42 | 16 | 3/4 | 23-1/2 | 1 |
| 48 | 18 | 3/4 | 25 | 1-1/8 |

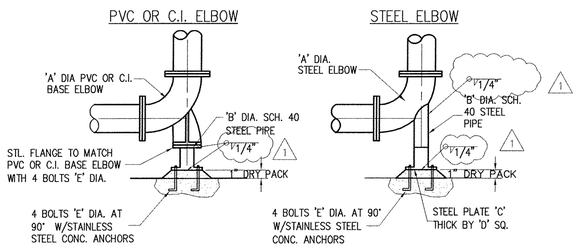


## PIPE ELBOW SUPPORT 1

NOT TO SCALE

| DIMENSIONS IN INCHES | | | | | | |
|---|---|---|---|---|---|---|
| PIPE DIA. | "A" | "B" | "C" | "D" (APPROX) | "E" | "F" |
| 2 TO 4 | (4) 5/8x6 | 1-1/4 | 5-3/4 | 8-1/2 (OMIT ONE) | 3/8 | 1/4 |
| 6 TO 10 | (6) 3/4x7 | 1-1/2 | 11 | 7-5/8 | 1/2 | 3/8 |
| 12 TO 16 | (6) 7/8x8-1/2 | 1-1/2 | 13 | 10-1/4 | 1/2 | 3/8 |
| 18 TO 30 | (6) 1x9 | 1-1/2 | 15 | 17-1/4 | 5/8 | 1/2 |

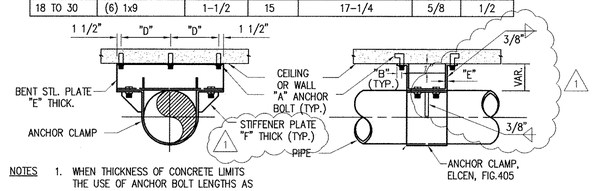


NOTES

1. WHEN THICKNESS OF CONCRETE LIMITS THE USE OF ANCHOR BOLT LENGTHS AS TABULATED, SHORTER BOLTS WELDED TO REINFORCING BARS MAY BE USED.
2. GALVANIZE AFTER FABRICATION.

## PIPE ANCHOR 2

NOT TO SCALE

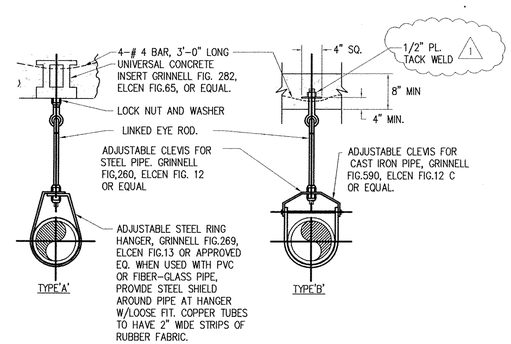


| PIPE HANGER RODS AND SUPPORT SPACING | | | | | |
|---|---|---|---|---|---|
| PIPE DIA. (INCHES) | ROD DIA. (INCHES) | MAX. SUPPORT SPACING (FEET) | | WEIGHT LIMIT (LBS) | |
| | | STL.PIPE | C.I. PIPE | TYPE 'A' | TYPE 'B' |
| 1 & SMALLER | 3/8 | 6 | 5 | 610 | 1700 |
| 1-1/4 TO 2 | 3/8 | 9 | 5 | 610 | 1700 |
| 2-1/2 TO 3-1/2 | 1/2 | 12 | 5 | 1130 | 3200 |
| 4 TO 5 | 5/8 | 14 | 5 | 1430 | 3800 |
| 6, 8 | 3/4 | 16 | 5 | 1430 | 3800 |
| 10, 12 | 7/8 | 18 | – | 1430 | 3800 |
| 14, 16 | 1 | 20 | – | 1430 | 3800 |

## PIPE HANGER 3

NOT TO SCALE

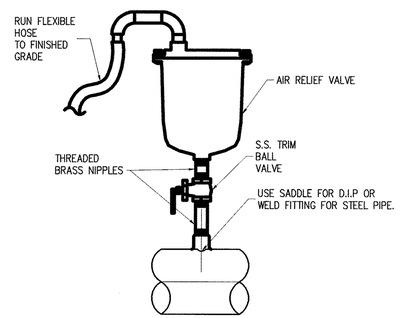


## AIR RELIEF VALVE 4

NOT TO SCALE

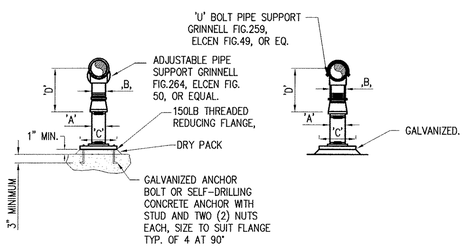


## ADJUSTABLE PIPE SUPPORT DETAIL 5

NOT TO SCALE

| ADJUSTABLE PIPE SUPPORT APPROXIMATE DIMENSIONS IN INCHES | | | | | |
|---|---|---|---|---|---|
| PIPE SIZE | 'A' | 'B' | 'C' | 'D' MINIMUM | 'D' MAXIMUM |
| 2-1/2 | 2-1/2 | 1-1/2 | 9 | 8 | 11-1/2 |
| 3 | 2-1/2 | 1-1/2 | 9 | 8-1/2 | 11-3/4 |
| 3-1/2 | 2-1/2 | 1-1/2 | 9 | 8-1/2 | 12 |
| 4 | 3 | * 2-1/2 | 9 | 10-1/4 | 14 |
| 6 | 3 | * 2-1/2 | 9 | 11-5/8 | 15-1/4 |
| 8 | 3 | * 2-1/2 | 9 | 13-5/8 | 16-1/2 |
| 10 | 3 | * 2-1/2 | 9 | 14-5/8 | 18-1/4 |
| 12 | 3 | * 2-1/2 | 9 | 15-5/8 | 19-3/4 |
| 14 | 4 | 3 | 11 | 18-7/8 | 20-3/4 |
| 16 | 4 | 3 | 11 | 19-7/8 | 22-1/4 |
| 18 | 6 | 3-1/2 | 13-1/2 | 21-1/4 | 24 |
| 20 | 6 | 3-1/2 | 13-1/2 | 23-1/4 | 25-1/2 |
| 24 | 6 | 4 | 13-1/2 | 26-1/2 | 28-1/4 |
| 30 | 6 | 4 | 13-1/2 | 29-5/8 | 31-1/2 |
| 32 | 6 | 4 | 13-1/2 | 30-5/8 | 32-3/4 |
| 36 | 6 | 4 | 13-1/2 | 32-5/8 | 34-3/4 |

* DENOTES REFERENCE TO MANUFACTURER

DT-106

| REVISION | | |
|---|---|---|
| NO. | DESCRIPTION | DATE |
| 1 | BUILDING DEPARTMENT PLAN CHECK COMMENTS | 01/05/09 |

REGISTERED PROFESSIONAL ENGINEER CHRISTOPHER SHEM HAWES 69578 CIVIL STATE OF CALIFORNIA 01/30/2010

APPROVED BY: CHRISTOPHER SHEM HAWES RCE 69578 — DATE 2/25/08
APPROVED: — DATE
APPROVED: — DATE

PLANS PREPARED BY:
CIVILTEC engineering inc.
*General Civil, Municipal, Water and Wastewater Engineering, Planning, Construction Management and Surveying*
118 West Lime Avenue
Monrovia, Ca. 91016
Phone: (626) 357-0588
Fax: (626) 303-7957

Battelle
*The Business of Innovation*

CITY OF PASADENA INCORPORATED JUNE 1886

D.S.-209 & 210A

| | | | |
|---|---|---|---|
| DATE FEBRUARY 2009 | SCALE AS SHOWN | PASADENA WATER & POWER CITY OF PASADENA | SHEET NO 49 OF 79 SHEETS |
| DRAWN BY CIVILTEC; DESIGNED BY CIVILTEC; CHECKED BY CIVILTEC; SUBMITTED BY CIVILTEC | | MONK HILL TREATMENT SYSTEM GENERAL DETAILS | WORK ORDER 02557 / FILE NUMBER E-1670 |
| FIELD BOOKS / CALC BOOKS | | APPROVED / APPROVED | REVISION |

X:\2007\27140-JPL MONKHILL TREATMENT PLANT\DWGS\SUBMITTALS\FINAL SUBMITTAL\27140-GENERAL DETAIL-DT-106.DWG (02-27-09 9:30:19AM)

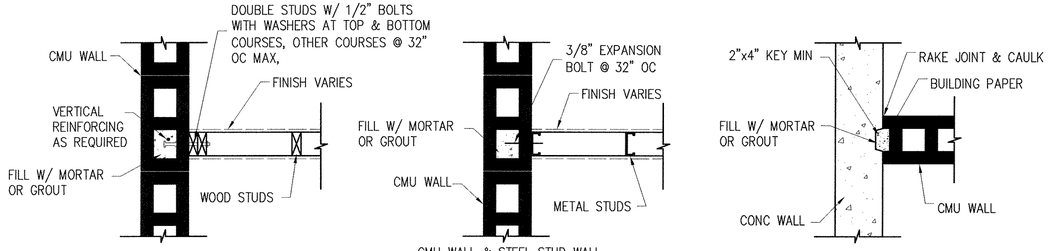


## WALL INTERSECTION (1 / DT-107)

NOT TO SCALE

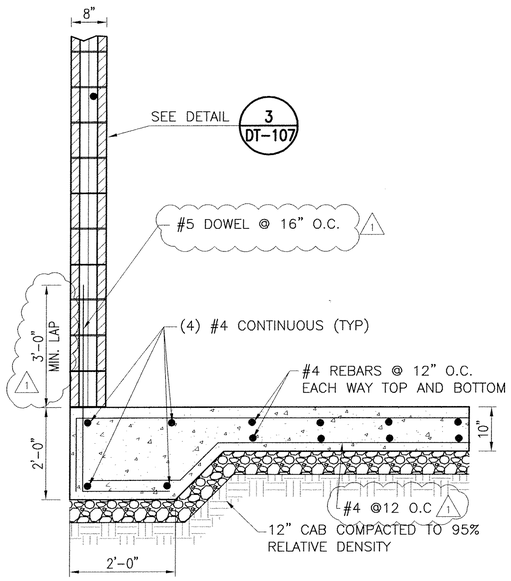


## CONCRETE PAD SECTION (2 / DT-107)

NOT TO SCALE

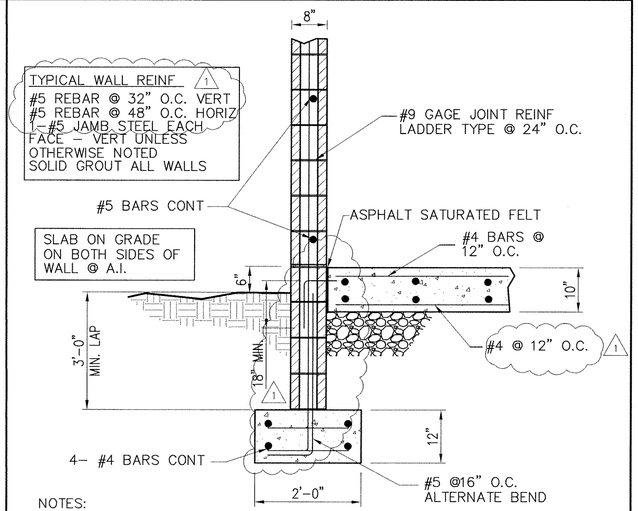


NOTES:

1. SLAB ON GRADE SHALL BE 10" CONCRETE W/ #4 @ 12" O.C. EACH WAY
2. REMOVE AND REPLACE ALL SOILS BELOW FOOTINGS W/ COMPACTED GRANULAR FILL FOR 12"
3. ALL EXTERIOR CONCRETE SHALL BE 4000 PSI WITH 6% AIR.
4. ALL REINFORCING BARS SHALL BE 60 GRADE CONFORMING TO ASTM A-615.

## TYPICAL WALL SECTION (3 / DT-107)

NOT TO SCALE

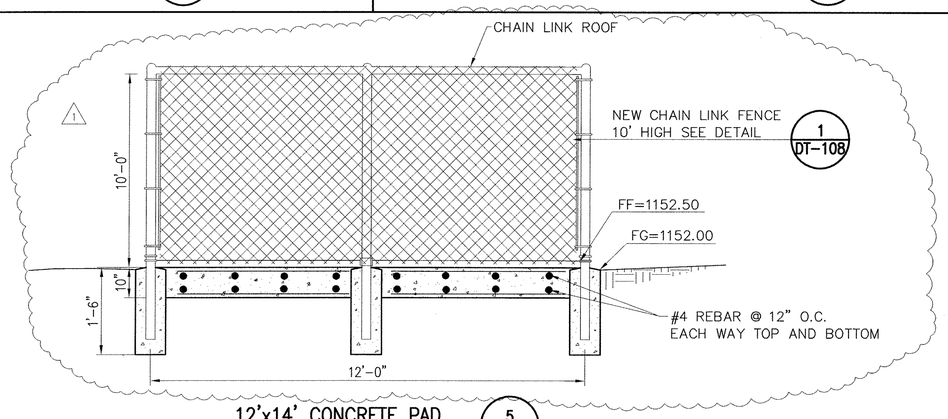


## 12'x14' CONCRETE PAD (5 / DT-107)

NOT TO SCALE

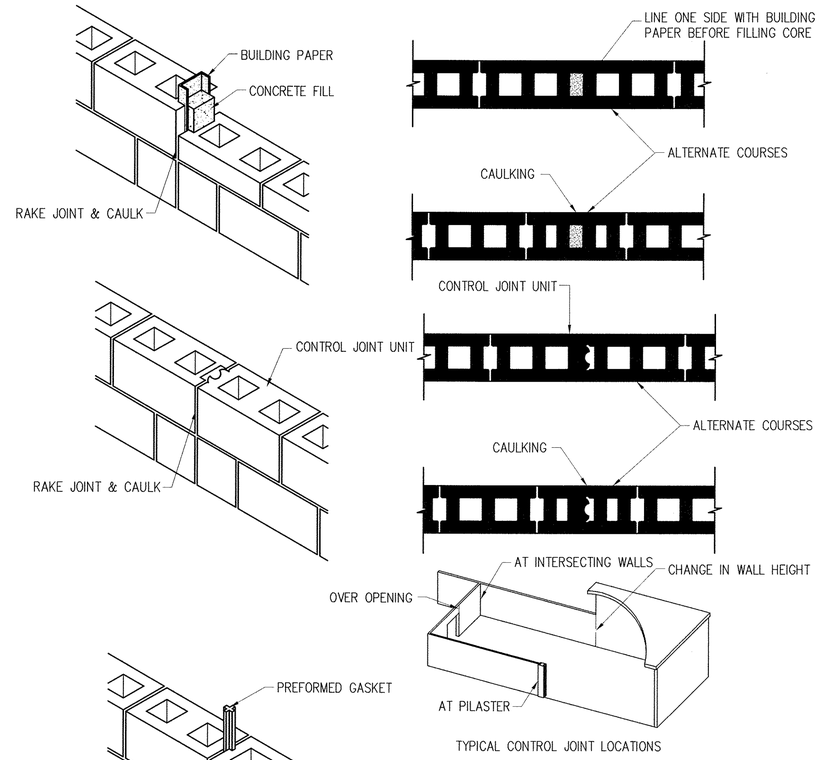


TYPICAL CONTROL JOINT LOCATIONS

| CONTROL JOINT SPACING FOR MOISTURE CONTROLLED TYPE 1 CMU | | | | |
|---|---|---|---|---|
| RECOMMENDED SPACING OF CONTROL JOINTS | VERTICAL SPACING OF JOINT REINFORCEMENT | | | |
| | NONE | 24" | 16" | 8" |
| EXPRESSED AS RATIO OF PANEL LENGTH TO HEIGHT L/H | 2 | 2-1/2 | 3 | 4 |
| WITH PANEL LENGTH (L) NOT TO EXCEED: | 40' | 45' | 50' | 60' |

## CONTROL JOINTS (4 / DT-107)

NOT TO SCALE

REVISION

| NO. | DESCRIPTION | DATE |
|---|---|---|
| 1 | BUILDING DEPARTMENT PLAN CHECK COMMENTS | 01/05/09 |

REGISTERED PROFESSIONAL ENGINEER CHRISTOPHER SHEM HAWES 69578 6/30/2010 CIVIL STATE OF CALIFORNIA

APPROVED BY: C. Shem Hawes 69578 2/25/08
CHRISTOPHER SHEM HAWES RCE — DATE
APPROVED: — DATE
APPROVED: — DATE

PLANS PREPARED BY:

CIVILTEC engineering inc.

*General Civil, Municipal, Water and Wastewater Engineering, Planning, Construction Management and Surveying*

118 West Lime Avenue
Monrovia, Ca. 91016
Phone: (626) 357-0588
Fax: (626) 303-7957

Battelle
*The Business of Innovation*

CITY OF PASADENA INCORPORATED JUNE 1886

D.S.-209 & 210A

| DATE | SCALE | PASADENA WATER & POWER CITY OF PASADENA | SHEET NO 50 OF 79 SHEETS |
|---|---|---|---|
| FEBRUARY 2009 | AS SHOWN | | |
| DRAWN BY CIVILTEC | | MONK HILL TREATMENT SYSTEM GENERAL DETAILS | WORK ORDER 02557 / FILE NUMBER E-1670 |
| DESIGNED BY CIVILTEC | | | |
| CHECKED BY CIVILTEC | | | |
| SUBMITTED BY CIVILTEC | | | |
| FIELD BOOKS / CALC BOOKS | | APPROVED / APPROVED | REVISION |

DT-107

X:\20070-237-03-_PL MONHILL TREATMENT PLANT\DWG\SUBMITTALS\FINAL SUBMITTAL\27140-GENERAL DETAIL-DT-107.DWG (02-27-09 9:30:40AM)

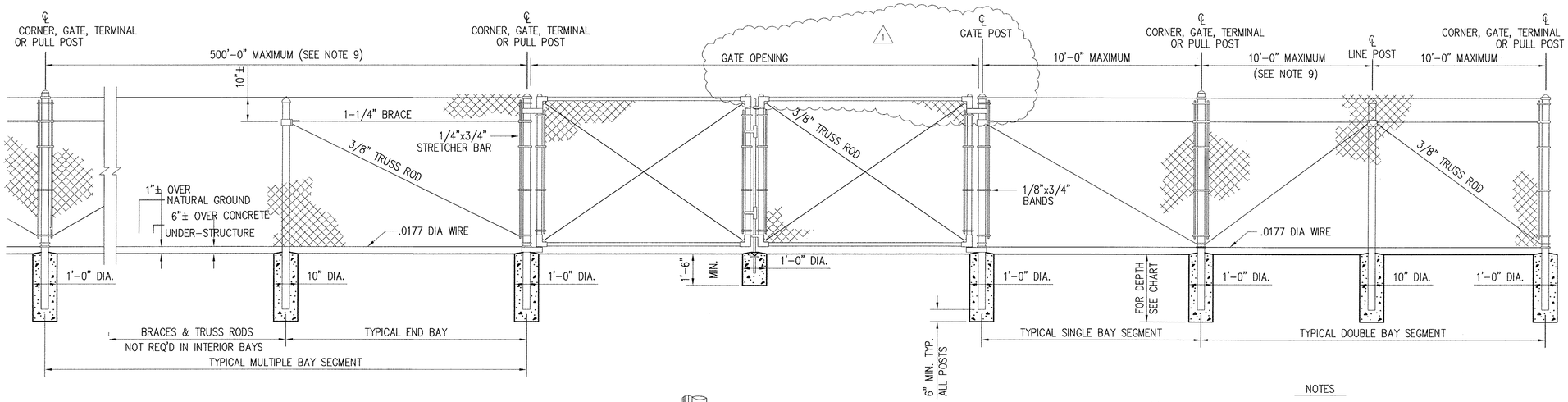


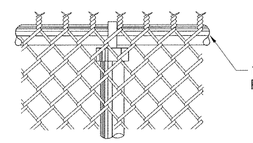


TWISTED AND BARBED SELVAGE
(TYPE II FENCE)

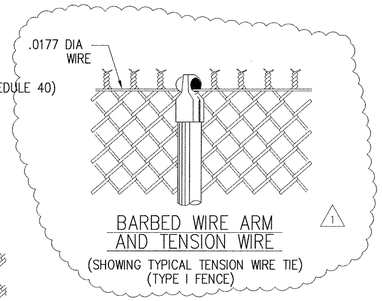


BARBED WIRE ARM AND TENSION WIRE
(SHOWING TYPICAL TENSION WIRE TIE)
(TYPE I FENCE)

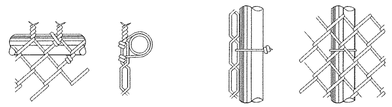

RAIL TIE PIPE POST TIE

TYPICAL TIE DETAILS

GATE HOLD BACK

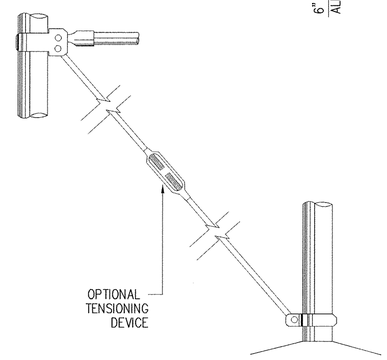


BRACE AND TRUSS CONNECTIONS

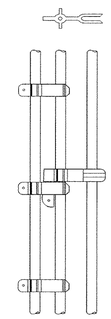

DROP ROD ASSEMBLY

NOTES

(1) MATERIALS, CONSTRUCTION AND WORKMANSHIP SHALL BE IN ACCORDANCE WITH THE WRITTEN SPECIFICATIONS.
(2) THE TYPE OF TOP SUPPORT IS SPECIFIED IN THE SPECIFICATIONS, TYPE I, TENSION WIRE AND TYPE II, TUBULAR RAIL.
(3) BARBED WIRE SHALL BE USED ONLY WHEN INDICATED ON THE PLANS AND IN THE SPECIFICATIONS.
(4) TWISTED AND BARBED SELVAGE, TOP AND BOTTOM, SHALL BE USED ON FENCES FIVE FEET OR GREATER IN HEIGHT.
(5) KNUCKLED SELVAGE ON TOP AND TWISTED AND BARBED SELVAGE ON BOTTOM SHALL BE USED ON FENCES LESS THAN FIVE FEET **IN HEIGHT.**
(6) ALL STEEL PIPE MEMBERS SHALL CONFORM TO THE REQUIREMENTS OF ASTM DESIGNATION A–120, SCHEDULE 40, HOT DIPPED ZINC COATED STEEL PIPE.
(7) OPTIONS EXERCISED SHALL BE UNIFORM THROUGHOUT THE **PROJECT.**
(8) LINE POSTS SHALL BE LOCATED AT EQUAL SPACING FOR EACH SEGMENT WITH MAXIMUM SPACING AS FOLLOWS:
  **A.** TANGENT SECTIONS TO 500 FEET RADIUS – NOT MORE THAN 10 FEET.
  **B.** UNDER 500 FEET RADIUS TO 200 FEET RADIUS – NOT MORE THAN 8 FEET.
  **C.** UNDER 200 FEET RADIUS TO 100 FEET RADIUS – NOT MORE THAN 6 FEET.
  **D.** UNDER 100 FEET RADIUS – NOT MORE THAN 5 FEET.
(9) THE MINIMUM HEIGHT OF FABRIC ON FENCES AND GATES SHALL **BE 6 FEET.**
(10) ALL CONCRETE SHALL HAVE A MINIMUM OF 5 SACKS OF CEMENT **PER CUBIC YARD.**
(11) FASTEN FABRIC TO TOP AND BOTTOM TENSION CABLE AT 24 INCH INTERVALS. FASTEN TO LINE POSTS AT 14 INCH INTERVALS.

| GATES | | | |
|---|---|---|---|
| GATE POSTS AND GATE FRAMES | | | |
| HEIGHT | GATE OPENING | GATE POST | GATE FRAME |
| UNDER 6 FEET | SINGLE TO 6' OR DOUBLE TO 12' | 2" | 1" |
| | SINGLE OVER 6' TO 8' OR DOUBLE OVER 12' TO 16' | 2–1/2" | 1–1/2" |
| | SINGLE OVER 8' TO 12' OR DOUBLE 16' TO 24' | 3–1/2" | |
| 6 FEET AND OVER | SINGLE TO 6' OR DOUBLE TO 12' | 2–1/2" | 1–1/2" |
| | SINGLE OVER 6' TO 13' OR DOUBLE OVER 12' TO 24' | 3–1/2" | |
| | SINGLE OVER 13' TO 18' OR DOUBLE OVER 24' TO 36' | 6" | |
| | SINGLE OVER 18' OR DOUBLE OVER 36' | 8" | |

| GAGE OF FABRIC | HEIGHT OF FABRIC | DEPTH OF POSTS | LENGTH OF END, CORNER OR PULL POSTS | LENGTH OF LINE POSTS | SIZE OF POSTS | | | | |
|---|---|---|---|---|---|---|---|---|---|
| | | | | | END, CORNER & PULL | | LINE POSTS (MIN SIZE) | | GATE POST |
| | | | | | PIPE OPTION | RECTANGULAR OPTION | PIPE OPTION | H POST OPTION | |
| 9 | 7' | 3' | 10' | 9'–8" | 2–1/2" | 3–1/2" | 2" | 1–7/8"x1–5/8" | SEE GATE POST TABLE |
| 9 | 6' | 3' | 9' | 8'–8" | 2–1/2" | 3–1/2" | 2" | 1–7/8"x1–5/8" | |
| 9 | 5' | 3' | 8' | 7'–8" | 2" | 3–1/2" | 1–1/2" | 1–5/16"x1–1/2" | |
| 9 | 4' | 2' | 6' | 5'–8" | 2" | 3–1/2" | 1–1/2" | 1–5/16"x1–1/2" | |
| 9 | 3' | 2' | 5' | 4'–8" | 2" | 3–1/2" | 1–1/2" | 1–5/16"x1–1/2" | |

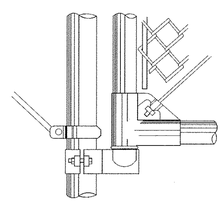

BOTTOM GATE HINGE AND GATE DETAILS

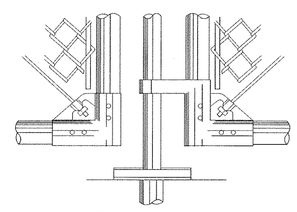

CENTER GATE STOP AND GATE DETAILS

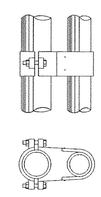

TOP GATE HINGE

(NOTE: OPTIONAL WELDED OR RIVETED CONSTRUCTION)

## CHAIN LINK FENCE DETAIL

NOT TO SCALE

1
DT–108

DT–108

| REVISION | | |
|---|---|---|
| NO. | DESCRIPTION | DATE |
| 1 | BUILDING DEPARTMENT PLAN CHECK COMMENTS | 01/05/09 |

REGISTERED PROFESSIONAL ENGINEER CHRISTOPHER SHEM HAWES 69578 CIVIL STATE OF CALIFORNIA 6/30/2010

APPROVED BY: C. Shem Hawes 69578 CHRISTOPHER SHEM HAWES RCE 2/25/08 DATE
APPROVED: DATE
APPROVED: DATE

PLANS PREPARED BY:
CIVILTEC engineering inc.
*General Civil, Municipal, Water and Wastewater Engineering, Planning, Construction Management and Surveying*
118 West Lime Avenue
Monrovia, Ca. 91016
Phone: (626) 357-0588
Fax: (626) 303-7957

Battelle
*The Business of Innovation*

CITY OF PASADENA INCORPORATED JUNE 1886

D.S.–209 & 210A

| DATE | SCALE | PASADENA WATER & POWER CITY OF PASADENA | SHEET NO 51 OF 79 SHEETS |
|---|---|---|---|
| FEBRUARY 2009 | AS SHOWN | | |
| DRAWN BY CIVILTEC | | MONK HILL TREATMENT SYSTEM | WORK ORDER 02557 / FILE NUMBER E–1670 |
| DESIGNED BY CIVILTEC | | GENERAL DETAILS | |
| CHECKED BY CIVILTEC | | | |
| SUBMITTED BY CIVILTEC | | | |
| FIELD BOOKS / CALC BOOKS | | APPROVED / APPROVED | REVISION |

X:\0007\27140-JR, MONKHILL TREATMENT PLANT\DWG\SUBMITTALS\FINAL SUBMITTAL\27140-GENERAL DETAIL-DT-108.DWG (02-27-09 9:31:05AM)

# LEGEND

## PROCESS LINES

- EXISTING PROCESS PIPING
- EXISTING SECONDARY PROCESS PIPING
- MISCELLANEOUS PIPING
- EXISTING MISCELLANEOUS PIPING
- ELECTRICAL SIGNAL
- HYDRAULIC SIGNAL
- ELECTRICAL DIRECTION ARROW
- SIGNAL CONNECTION POINT
- FLOW ARROW FOR PROCESS PIPING
- PROCESS OR SIGNAL LINE
- PROCESS LINES CROSSING (NOT CONNECTED)
- INTERNAL SYSTEM SIGNAL LINK (SOFTWARE OR SIGNAL LINK)
- PRIMARY PROCESS LINE
- SECONDARY PROCESS LINE
- BACKWASH LINE
- DRAIN LINE
- AIR LINE
- INSTRUMENT TUBING
- SKID LIMITS / BOUNDARIES
- INSULATED LINE
- HEAT TRACED LINE
- INSULATED AND HEAT TRACED LINE
- LINE BROKEN & CONTINUED or SPACE FOR COPIED EQUIPMENT

## P&ID INTERFACE SYMBOLS

FIELD DEVICE | MOUNTED *ON* MAIN PANEL (ACCESSIBLE) | MOUNTED *ON* AUX. PANEL (ACCESSIBLE) | MOUNTED *IN* PANEL (INACCESSIBLE)

- INSTRUMENT
- HMI OR OIT FUNCTION/SCADA
- PROGRAMMABLE LOGIC CONTROL, REMOTE I/O
- COMPUTER FUNCTION

- AE – ANALYZER ELEMENT
- RUN YL G – INDICATING LIGHT
- HOA HS – HAND SWITCH
- LS – FLOAT SWITCH
- LE – ULTRASONIC OR RADAR LEVEL TRANSDUCER
- AAA BBB X – PILOT LIGHT X= LENS COLOR R=RED, G=GREEN, A=AMBER, B=BLUE

- ANALOG INPUT
- ANALOG OUTPUT
- DISCRETE INPUT
- DISCRETE OUTPUT
- I/I – DUAL CHANNEL CURRENT ISOLATOR
- PULSE INPUT
- PULSE OUTPUT

## EQUIPMENT

- AERATION ROTOR
- AIR COMPRESSOR
- BLOWER
- CENTRIFUGAL PUMP
- GAS INJECTIONS
- METERING/SAMPLING PUMP
- ROTARY LOBE PUMP
- SAMPLER
- SLUICE GATE
- SUBMERSIBLE MIXER
- SUBMERSIBLE PUMP

## INSTRUMENT TAG NUMBERS

AI
TIC 01 AI

TIC-01 – INSTRUMENT IDENTIFICATION
LOOP NUMBER
FUNCTIONAL IDENTIFICATION
ADDITIONAL IDENTIFICATION SEE ABBREVIATIONS AND HAND SWITCH DESIGNATIONS

## SIGNALS

- ELECTRICAL
- DCS-PLC
- PNEUMATIC

## VALVES & SYMBOLS

- AIR RELEASE VALVE
- ANGLE
- BACKPRESSURE SUSTAINING
- BALL
- BALL CHECK VALVE
- BUTTERFLY
- CHECK
- DIAPHRAGM
- FLUME
- GATE
- GLOBE
- NEEDLE
- PLUG
- PLUG VALVE
- 3-WAY
- 4-WAY
- PRESSURE REDUCING
- RELIEF VALVE
- SOLENOID VALVE
- SWING CHECK VALVE
- WEIR
- WATER SURFACE
- Y-STRAINER

# P&ID ABBREVIATIONS

| | |
|---|---|
| A | AMPERE |
| AFD | ADJUSTABLE FREQUENCY DRIVE |
| AI | ANALOG INPUT |
| AIC | AMPS INTERRUPTING CAPACITY |
| ARV | AIR RELIEF VALVE |
| AO | ANALOG OUTPUT |
| AS | AIR SUPPLY |
| ATS | AUTOMATIC TRANSFER SWITCH |
| AUTO | AUTOMATIC |
| AFP | BELT FILTER PRESS |
| BWL | BOTTOM WATER LEVEL |
| CB | CIRCUIT BREAKER |
| CL2 | CHLORINE |
| CPM | CUSTOMER POWER MONITORING UNIT |
| CON | CONTACTOR |
| CU | COPPER, BARE |
| CV | CONTROL VALVE |
| DCS | DISTRIBUTED CONTROL SYSTEM |
| DI | DISCREET INPUT |
| DO | DISSOLVED OXYGEN |
| DP | DIFFERENTIAL PRESSURE |
| DWG | DRAWING |
| ETM | ELAPSED TIME METER |
| ETMf | ELAPSED TIME METER (FAST SPEED) |
| ETMs | ELAPSED TIME METER (SLOW SPEED) |
| EOL | ELECTRIC OVERLOAD |
| ES | EMERGENCY STOP |
| EXIST | EXISTING |
| FA | FOUL AIR |
| FC | FAIL CLOSED |
| FE | FLOW ELEMENT |
| FLT | FILTER |
| FMR | FEEDER MANAGEMENT RELAY |
| FR | FORWARD-REVERSE |
| FS | FLOW SWITCH |
| FVNR | FULL VOLTAGE NON-REVERSING |
| FW | FINISHED WATER |
| GRN | GROUND |
| GAL | GALLONS |
| GCP | GENERATOR CONTROL PANEL |
| GPD | GALLONS PER DAY |
| GPH | GALLONS PER HOUR |
| GPM | GALLONS PER MINUTE |
| H, HI | HIGH |
| H2S | HYDROGEN SULFIDE |
| HMI | HUMAN MACHINE INTERFACE |
| HOA | HAND-OFF-AUTO |
| I | CURRENT |
| ICR | INTERMITTENT CYCLE |
| IO | REACTORINPUT/OUPUT |
| IOE | INTERNAL-OFF-EXTERNAL |
| JB | JUNCTION BOX |
| L, LO | LOW |
| LAN | LOCAL AREA NETWORK |
| LC | LOOP CONTROLLER |
| LCP | LOCAL CONTROL PANEL |
| L/O/A/R | LOWER/OFF/AUTO/RAISE |
| LOS | LOCK-OFF-STOP |
| LR | LOCAL/REMOTE |
| LS | LEVEL SWITCH |
| M | MOTOR |
| MA | MANUAL/AUTO, MILLIAMP |
| MC | MANUFACTURE CABLE |
| MCC | MOTOR CONTROL CENTER |
| MCP | MOTOR CIRCUIT PROTECTOR |
| MFR(S) | MANUFACTURER(S) |
| MGD | MILLION GALLONS PER DAY |
| MGL | MILLIGRAMS PER LITER |
| MH | MANHOLE |
| MLR | MIXED LIQUOR RETURN |
| MO | MOISTURE |
| MOD | MODULATED |
| MOG | MOTOR OPERATED GATE |
| MS | MOISTURE SWITCH |
| MTU | MASTER TELEMETRY UNIT |
| NPW | NON-POTABLE WATER |
| NS | NITROGEN SUPPLY |
| NTU | TURBIDITY |
| O/C | OPEN / CLOSE |
| OCA | OPEN-CLOSE-AUTO |
| OCR | OPEN-CLOSE-REMOTE |
| OIT | OPERATOR INTERFACE TERMINAL |
| OL | OVERLOAD |
| OO | ON/OFF (MAINTAINED) |
| OOA | ON-OFF-AUTO |
| OOR | ON-OFF-REMOTE |
| OSC | OPEN-STOP-CLOSE |
| PAH | PRESSURE ALARM HIGH |
| PER | PERMISSIVE |
| PID | PROPORTIONAL INTEGRAL DESIGN |
| PLC | PROGRAMMABLE LOGIC CONTROLLER |
| PNL | PANEL |
| PO | PULSE OUTPUT |
| POS | POSITION |
| POT | POTENTIOMETER |
| PPH | POUNDS PER HOUR |
| PPM | PARTS PER MILLION |
| PR | PAIR |
| PRES | PRESSURE |
| PS | PRESSURE SWITCH |
| PSI | POUNDS PER SQUARE INCH |
| PV | PROCESS VARIABLE |
| RAS | RETURN ACTIVATED SLUDGE |
| RAW | RAW WATER |
| REM | REMOTE |
| RF | RADIO FREQUENCY |
| RIO | REMOTE INPUT OUTPUT |
| RS | RAW SEWAGE |
| RSP | RAW SEWAGE PUMP |
| RST | RESET |
| RTU | REMOTE TELEMETRY UNIT |
| RUNf | RUN (FAST SPEED) |
| RUNs | RUN (SLOW SPEED) |
| SB | SLUDGE BLANKET |
| SEQ | SERVICE ENTRANCE EQUIPMENT |
| SES | SERVICE ENTRANCE SECTION |
| SLC | SINGLE LOOP CONTROLLER |
| SLG | SLUICE GATE |
| SLOS | START-LOCK-OFF-STOP |
| SO2 | SULFUR DIOXIDE |
| SOV | SOLENOID OPERATED VALVE |
| SP | SET POINT |
| SPD | SPEED |
| SPR | SPARE |
| SS | START/STOP (MAINTAINED) |
| SSS | SOLID STATE STARTER (SOFT START) |
| TAH | TEMPERATURE ALARM HIGH |
| T/M | TEMPERATURE AND/OR MOISTURE |
| TEMP | TEMPERATURE |
| TS | TEMPERATURE SWITCH |
| TSS | TOTAL SUSPENDED SOLIDS |
| TWL | TOP WATER LEVEL |
| UG | UNDERGROUND |
| USD | UP/STOP/DOWN |
| V | VOLT |
| V* | VENDOR EQUIPMENT |
| VFD | VARIABLE FREQUENCY DRIVE |
| VTP | VERTICAL TURBINE PUMP |
| W | WATT, WIRE |
| WAS | WASTE ACTIVATED SLUDGE |
| ZS | POSITION (i.e. LIMIT) SWITCH |

## FUNCTIONAL IDENTIFICATION

| FIRST LETTER | OPTIONAL MIDDLE LETTER(S) | LAST LETTER |
|---|---|---|
| A – ANALYZING | A – ALARM | C – CONTROLLER |
| C – CONDUCTIVITY | C – CONTROL | E – ELEMENT |
| D – DIFFERENTIAL | I – INDICATING | H – HIGH |
| E – VOLTAGE | Q – TOTALIZING | I – INDICATOR |
| F – FLOW | P – PRESSURE | L – LOW |
| G – GAUGE | X – UNCLASSIFIED | Q – TOTALIZER |
| H – HAND | Y – EVENT, STATE, OR PRESENCE | R – RECORDER |
| I – CURRENT (ELECTRICAL) | Z – POSITION | S – SWITCH |
| K – TIME | | T – TRANSMITTER |
| L – LEVEL | | V – VALVE |
| M – MOTOR | | |
| O – TORQUE | | |
| P – PRESSURE | | |
| R – RUN | | |
| S – SPEED FREQUENCY | | |
| T – TEMPERATURE | | |

## HAND SWITCH DESIGNATIONS

| | |
|---|---|
| ES | EMERGENCY STOP |
| HOA | HAND-OFF-AUTO |
| HOR | HAND-OFF-REMOTE |
| HORA | HAND-OFF-REMOTE-AUTO |
| JOA | JOG-OFF-AUTO |
| LOAR | LOWER-OFF-AUTO-RAISE |
| LOR | LOCAL-OFF-REMOTE |
| LR | LOCAL-REMOTE |
| OC | OPEN-CLOSE |
| OO | ON-OFF |

## VALVE ACCESSORIES

| DIAPHRAGM ACTUATOR | PISTON ACTUATOR | MOTORIZED ACTUATOR |
|---|---|---|
| DOUBLE ACTING (AIR TO AIR) (FAIL LAST) | | DOUBLE ACTING (POWER TO MOVE) (FAIL LAST) |
| SPRING TO OPEN (AIR TO CLOSE) (FAIL OPEN) (NORMALLY OPEN) | | SPRING TO OPEN (POWER TO CLOSE) (FAIL OPEN) (NORMALLY OPEN) |
| SPRING TO CLOSE (AIR TO OPEN) (FAIL CLOSE) (NORMALLY CLOSED) | | SPRING TO CLOSE (POWER TO OPEN) (FAIL CLOSE) (NORMALLY CLOSED) |
| w/ TRAVEL STOP | | w/ TRAVEL STOP |
| – RELIEF | – REGULATED | S – SOLENOID |

## PROCESS LINE ACCESSORIES

- FLOW DIRECTION
- DRAIN (TO GRADE, UNLESS OTHERWISE SPECIFIED)
- REDUCER
- OPEN SPECTACLE BLIND
- CLOSED SPECTACLE BLIND
- TANK CONNECTIONS (FRONT & SIDE VIEWS)
- FLEXIBLE COUPLING
- FLANGE
- QUICK CONNECT
- HOSE CONNECTION
- FLEXIBLE HOSE
- CAP
- RESIN TRAP

## INSTRUMENT ACCESSORIES

- FLOW ORFICE
- MAGNETIC FLOW METER
- SONIC FLOW METER
- TURBINE FLOW METER
- VORTEX FLOW METER
- MCC – CONTROLLED BY MOTOR CONTROL CENTER
- IA – I/P CONVERTER
- RUPTURE DISC
- FI – ROTAMETER
- ISOLATION/SAMPLING BALL VALVE
- INTERLOCK
- VFD – CONTROLLED BY VARIABLE FREQUENCY DRIVE

PID-101

| REVISION | | |
|---|---|---|
| NO. | DESCRIPTION | DATE |
| | | |

REGISTERED PROFESSIONAL ENGINEER CHRISTOPHER SHEM HAWES 69578 CIVIL STATE OF CALIFORNIA 6/30/2010

APPROVED BY: C. Shem Hawes 69578 CHRISTOPHER SHEM HAWES RCE — DATE 2/25/08
APPROVED: — DATE
APPROVED: — DATE

PLANS PREPARED BY:
CIVILTEC engineering inc.
*General Civil, Municipal, Water and Wastewater Engineering, Planning, Construction Management and Surveying*
118 West Lime Avenue
Monrovia, Ca. 91016
Phone: (626) 357-0588
Fax: (626) 303-7957

Battelle
*The Business of Innovation*

CITY OF PASADENA INCORPORATED JUNE 1886

D.S.-209 & 210A

| | | | |
|---|---|---|---|
| DATE FEBRUARY 2009 | SCALE AS SHOWN | PASADENA WATER & POWER CITY OF PASADENA | SHEET NO 52 OF 79 SHEETS |
| DRAWN BY CIVILTEC; DESIGNED BY CIVILTEC; CHECKED BY CIVILTEC; SUBMITTED BY CIVILTEC | | MONK HILL TREATMENT SYSTEM LEDGEND/SYMBOLS/ ABBREVIATIONS | WORK ORDER 02557 / FILE NUMBER E-1670 |
| FIELD BOOKS | CALC BOOKS | APPROVED / APPROVED | REVISION |

X:\2007\27140-JR MONKHILL TREATMENT PLANT\DWG\SUBMITTALS\FINAL SUBMITTAL\27140-MONKHILL PID-101.DWG (02-27-09 9:38:16am)

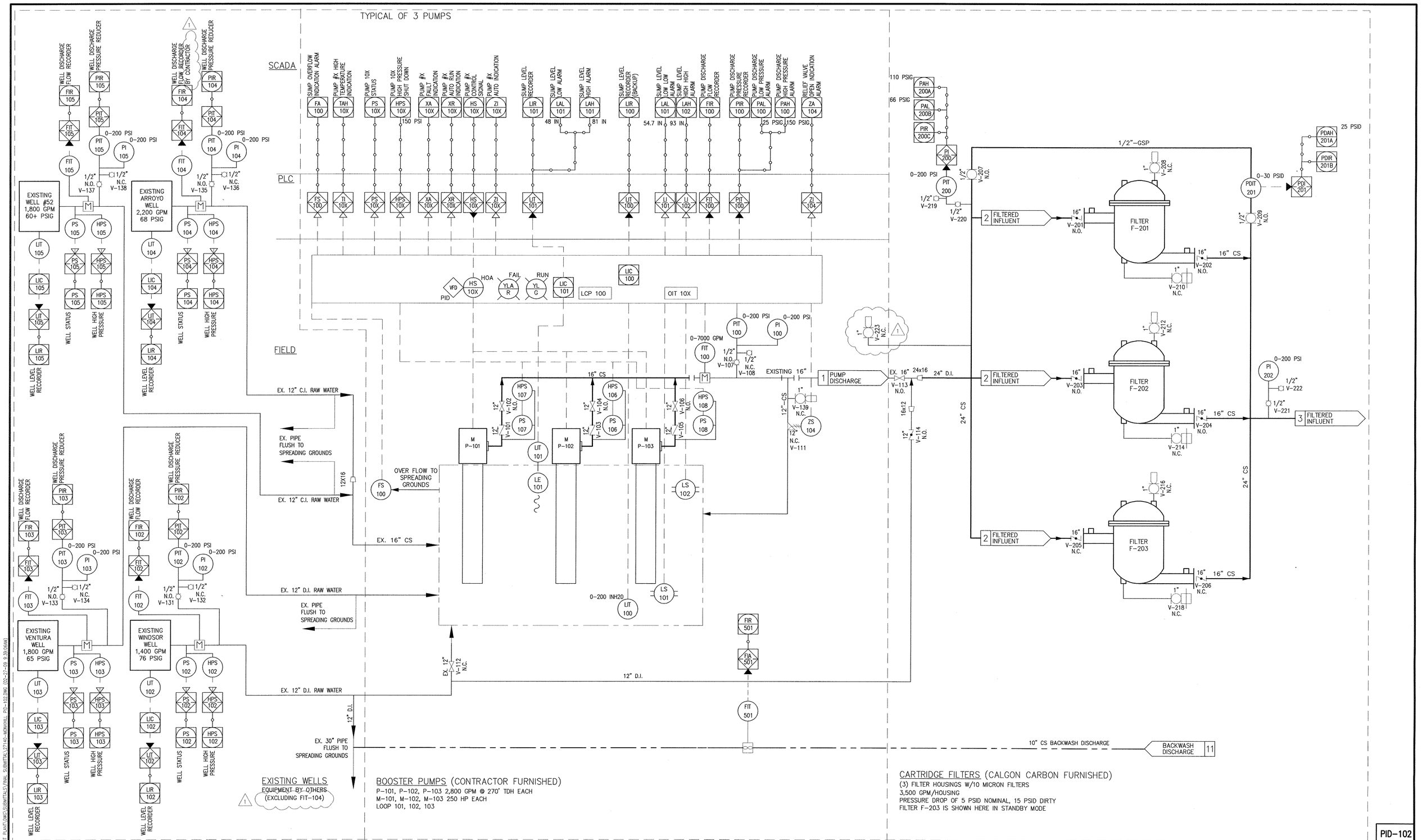


PID-102

| REVISION | | |
|---|---|---|
| NO. | DESCRIPTION | DATE |
| 1 | BUILDING DEPARTMNET PLAN CHECK COMMENTS | 01/05/09 |

REGISTERED PROFESSIONAL ENGINEER CHRISTOPHER SHEM HAWES 69578 6/30/2010 CIVIL STATE OF CALIFORNIA

APPROVED BY: C. Shem Hawes 69578 CHRISTOPHER SHEM HAWES RCE — DATE 2/25/08
APPROVED: — DATE
APPROVED: — DATE

PLANS PREPARED BY:
CIVILTEC engineering inc.
*General Civil, Municipal, Water and Wastewater Engineering, Planning, Construction Management and Surveying*
118 West Lime Avenue
Monrovia, Ca. 91016
Phone: (626) 357-0588
Fax: (626) 303-7957

Battelle
*The Business of Innovation*

CITY OF PASADENA INCORPORATED JUNE 1886

D.S.-209 & 210A

| | | | |
|---|---|---|---|
| DATE FEBRUARY 2009 | SCALE AS SHOWN | PASADENA WATER & POWER CITY OF PASADENA | SHEET NO 53 OF 79 SHEETS |
| DRAWN BY CIVILTEC; DESIGNED BY CIVILTEC; CHECKED BY CIVILTEC; SUBMITTED BY CIVILTEC | | MONK HILL TREATMENT SYSTEM BOOSTER STATIONS AND INFLUENT FILTERS | WORK ORDER 02557 / FILE NUMBER E-1670 |
| FIELD BOOKS | CALC BOOKS | APPROVED / APPROVED | REVISION |

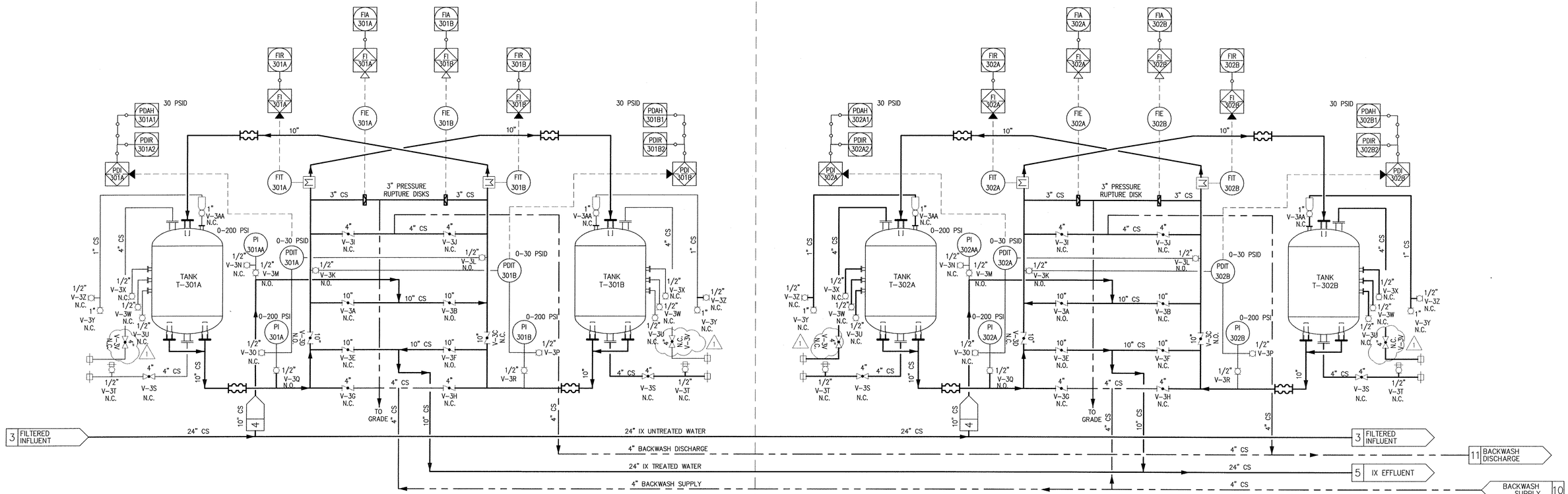


ION EXCHANGE TANKS T-301A & T-301B (CALGON CARBON FURNISHED)
(2) EXCHANGE VESSELS W/ 2109 RESIN
1,750 GPM/VESSEL
PRESSURE DROP OF 18.8 PSID NOMINAL, 30 PSID DIRTY
VESSELS ARE SHOWN IN NORMAL OPERATION TANK T-301A IS SHOWN HERE IN LEAD POSITION AND
T-301B IS SHOWN IN LAG POSITION

ION EXCHANGE TANKS T-302A & T-302B (CALGON CARBON FURNISHED)
(2) EXCHANGE VESSELS W/ 2109 RESIN
1,750 GPM/VESSEL
PRESSURE DROP OF 18.8 PSID NOMINAL, 30 PSID DIRTY
VESSELS ARE SHOWN IN NORMAL OPERATION TANK T-302B IS SHOWN HERE IN LEAD POSITION AND
T-302A IS SHOWN IN LAG POSITION

PID-103

| REVISION | | |
|---|---|---|
| NO. | DESCRIPTION | DATE |
| 1 | BUILDING DEPARTMENT PLAN CHECK COMMENTS | 01/05/09 |

REGISTERED PROFESSIONAL ENGINEER CHRISTOPHER SHEM HAWES 69578 6/30/2010 CIVIL STATE OF CALIFORNIA

APPROVED BY: C. Shem Hawes 69578 CHRISTOPHER SHEM HAWES RCE 2/25/08 DATE
APPROVED: DATE
APPROVED: DATE

PLANS PREPARED BY:
CIVILTEC engineering inc.
*General Civil, Municipal, Water and Wastewater Engineering, Planning, Construction Management and Surveying*
118 West Lime Avenue
Monrovia, Ca. 91016
Phone: (626) 357-0588
Fax: (626) 303-7957

Battelle
*The Business of Innovation*

CITY OF PASADENA INCORPORATED JUNE 1886

D.S.-209 & 210A
DATE: FEBRUARY 2009
SCALE: AS SHOWN
DRAWN BY: CIVILTEC
DESIGNED BY: CIVILTEC
CHECKED BY: CIVILTEC
SUBMITTED BY: CIVILTEC
FIELD BOOKS | CALC BOOKS | APPROVED | APPROVED

PASADENA WATER & POWER
CITY OF PASADENA
MONK HILL TREATMENT SYSTEM
ION EXCHANGE TANKS

SHEET NO 54 OF 79 SHEETS
WORK ORDER 02557
FILE NUMBER E-1670
REVISION

A:\02077\27140-PL MONKHILL TREATMENT PLANT\DWGS\SUBMITTALS\FINAL SUBMITTAL\27140-MONKHILL PID-103.DWG (02-27-09 9:39:50AM)

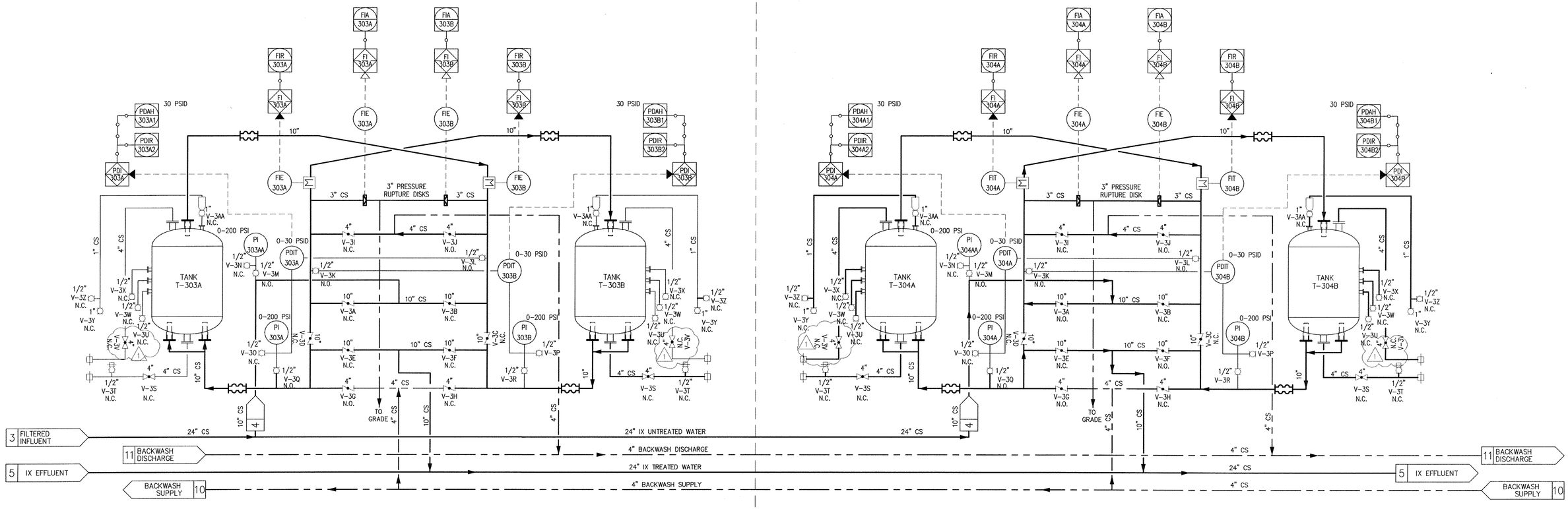


ION EXCHANGE TANKS T-303A & T-303B (CALGON CARBON FURNISHED)
(2) EXCHANGE VESSELS W/ 2109 RESIN
1,750 GPM/VESSEL
PRESSURE DROP OF 18.8 PSID NOMINAL, 30 PSID DIRTY
VESSELS ARE SHOWN IN BACKWASH MODE TANK T-303A IS SHOWN HERE IN BACKWASH POSITION AND T-303B IS SHOWN AS ISOLATED.

ION EXCHANGE TANKS T-304A & T-304B (CALGON CARBON FURNISHED)
(2) EXCHANGE VESSELS W/ 2109 RESIN
1,750 GPM/VESSEL
PRESSURE DROP OF 18.8 PSID NOMINAL, 30 PSID DIRTY
VESSELS ARE SHOWN IN BACKWASH MODE TANK T-304A IS SHOWN HERE IN BACKWASH POSITION AND T-304B IS SHOWN IN NORMAL OPERATION.

PID-104

| REVISION | | |
|---|---|---|
| NO. | DESCRIPTION | DATE |
| 1 | BUILDING DEPARTMENT PLAN CHECK COMMENTS | 01/05/09 |

REGISTERED PROFESSIONAL ENGINEER CHRISTOPHER SHEM HAWES 69578 CIVIL STATE OF CALIFORNIA
10/20/2010

APPROVED BY: C. Shem Hawes 69578 CHRISTOPHER SHEM HAWES RCE — DATE 2/25/08
APPROVED: — DATE
APPROVED: — DATE

PLANS PREPARED BY:
CIVILTEC engineering inc.
*General Civil, Municipal, Water and Wastewater Engineering, Planning, Construction Management and Surveying*
118 West Lime Avenue
Monrovia, Ca. 91016
Phone: (626) 357-0588
Fax: (626) 303-7957

Battelle
*The Business of Innovation*

CITY OF PASADENA INCORPORATED JUNE 1886

D.S.-209 & 210A

| | | | |
|---|---|---|---|
| DATE FEBRUARY 2009 | SCALE AS SHOWN | PASADENA WATER & POWER CITY OF PASADENA | SHEET NO 55 OF 79 SHEETS |
| DRAWN BY CIVILTEC | | MONK HILL TREATMENT SYSTEM ION EXCHANGE TANKS | WORK ORDER 02557 / FILE NUMBER E-1670 |
| DESIGNED BY CIVILTEC | | | |
| CHECKED BY CIVILTEC | | | |
| SUBMITTED BY CIVILTEC | | | |
| FIELD BOOKS | CALC BOOKS | APPROVED / APPROVED | REVISION |

X:\2007\27140-PL MONKHILL TREATMENT PLANT\DWGS\SUBMITTALS\FINAL SUBMITTAL\27140-MONKHILL PID-104.DWG (02-27-09 9:40:08AM)

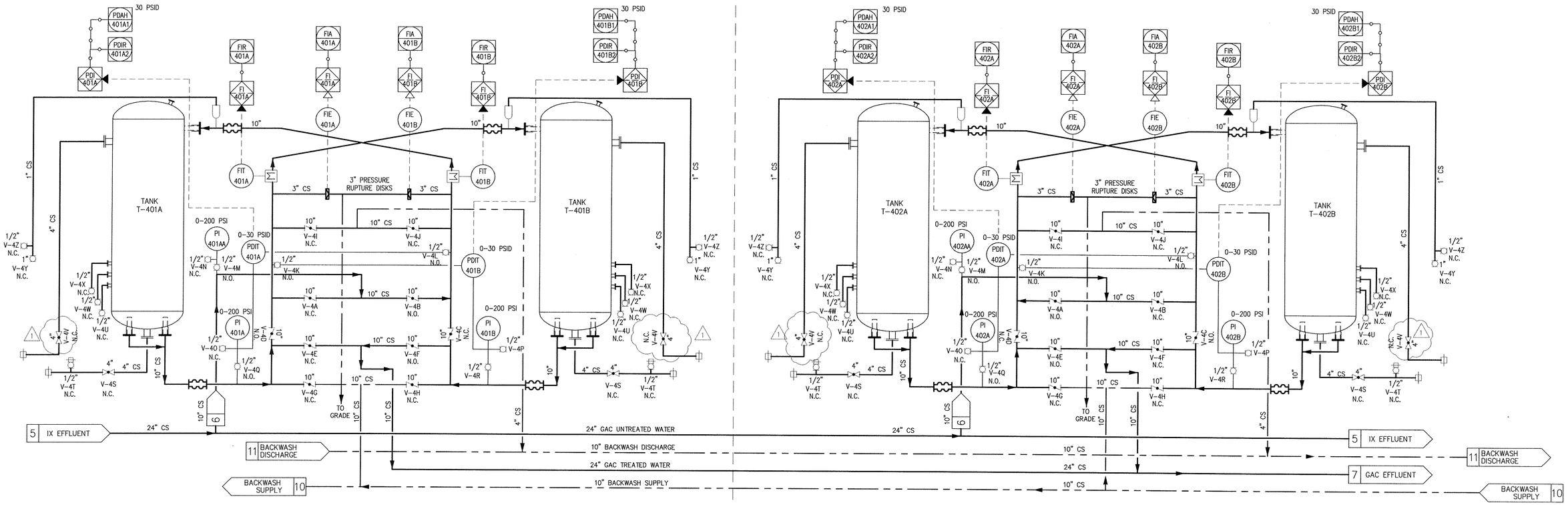


GRANULAR ACTIVATED CARBON TANKS T-401A & T-401B (CALGON CARBON FURNISHED)

(2) VESSELS PER SYSTEM W/ FILTRASORB 300 GAC
1,400 GPM/SYSTEM
PRESSURE DROP OF 11.2 PSID NOMINAL, 30 PSID DIRTY
VESSELS ARE SHOWN IN NORMAL OPERATION TANK T-401A IS SHOWN HERE IN LEAD POSITION AND T-401B IS SHOWN IN LAG POSITION

GRANULAR ACTIVATED CARBON TANKS T-402A & T-402B (CALGON CARBON FURNISHED)

(2) VESSELS PER SYSTEM W/ FILTRASORB 300 GAC
1,400 GPM/SYSTEM
PRESSURE DROP OF 11.2 PSID NOMINAL, 30 PSID DIRTY
VESSELS ARE SHOWN IN NORMAL OPERATION TANK T-402B IS SHOWN HERE IN LEAD POSITION AND T-402A IS SHOWN IN LAG POSITION

PID-105

| REVISION | | |
|---|---|---|
| NO. | DESCRIPTION | DATE |
| 1 | BUILDING DEPARTMENT PLAN CHECK COMMENTS | 01/05/09 |

REGISTERED PROFESSIONAL ENGINEER CHRISTOPHER SHEM HAWES 69578 6/30/2010 CIVIL STATE OF CALIFORNIA

APPROVED BY: CHRISTOPHER SHEM HAWES 69578 RCE — DATE 2/25/08
APPROVED: — DATE
APPROVED: — DATE

PLANS PREPARED BY:
CIVILTEC engineering inc.
*General Civil, Municipal, Water and Wastewater Engineering, Planning, Construction Management and Surveying*
118 West Lime Avenue
Monrovia, Ca. 91016
Phone: (626) 357-0588
Fax: (626) 303-7957

Battelle
*The Business of Innovation*

CITY OF PASADENA INCORPORATED JUNE 1886

D.S.-209 & 210A

| | | |
|---|---|---|
| DATE: FEBRUARY 2009 | SCALE: AS SHOWN | PASADENA WATER & POWER, CITY OF PASADENA |
| DRAWN BY: CIVILTEC | | MONK HILL TREATMENT SYSTEM, LGAC TANKS |
| DESIGNED BY: CIVILTEC | | |
| CHECKED BY: CIVILTEC | | |
| SUBMITTED BY: CIVILTEC | | |
| FIELD BOOKS | CALC BOOKS | APPROVED / APPROVED |

SHEET NO 56 OF 79 SHEETS
WORK ORDER 02557
FILE NUMBER E-1670
REVISION

X:\2007\27140-PL MONKHILL TREATMENT PLANT\DWG\SUBMITTAL\FINAL SUBMITTAL\27140-MONKHILL PID-105.DWG (02-27-09 9:41:04AM)

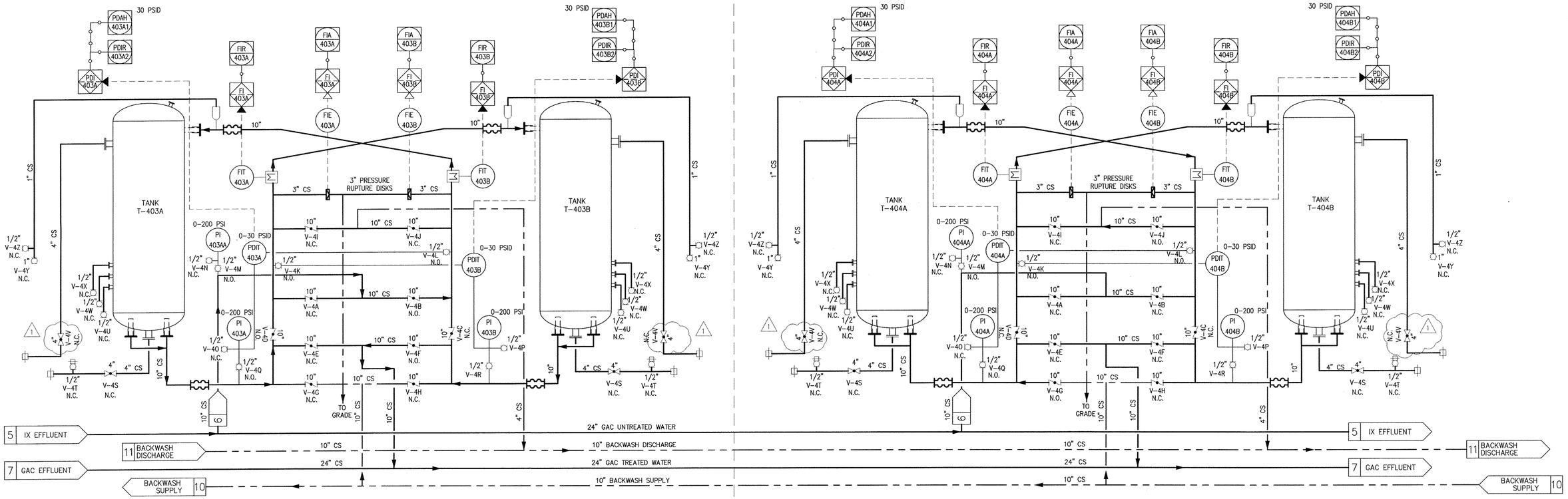





GRANULAR ACTIVATED CARBON TANKS T-403A & T-403B (CALGON CARBON FURNISHED)
(2) VESSELS PER SYSTEM W/ FILTRASORB 300 GAC
1,400 GPM/SYSTEM
PRESSURE DROP OF 11.2 PSID NOMINAL, 30 PSID DIRTY
VESSELS ARE SHOWN IN NORMAL OPERATION TANK T-403A IS SHOWN HERE IN LEAD POSITION AND T-403B IS SHOWN IN LAG POSITION

GRANULAR ACTIVATED CARBON TANKS T-404A & T-404B (CALGON CARBON FURNISHED)
(2) VESSELS PER SYSTEM W/ FILTRASORB 300 GAC
1,400 GPM/SYSTEM
PRESSURE DROP OF 11.2 PSID NOMINAL, 30 PSID DIRTY
VESSELS ARE SHOWN IN BACKWASH MODE TANK T-404A IS SHOWN HERE IN BACKWASH POSITION AND T-404B IS SHOWN AS ISOLATED.

PID-106

| REVISION | | |
|---|---|---|
| NO. | DESCRIPTION | DATE |
| 1 | BUILDING DEPARTMENT PLAN CHECK COMMENTS | 01/05/09 |

REGISTERED PROFESSIONAL ENGINEER CHRISTOPHER SHEM HAWES 69578 6/30/2010 CIVIL STATE OF CALIFORNIA

APPROVED BY: CHRISTOPHER SHEM HAWES 69578 RCE — DATE 2/25/08
APPROVED: — DATE
APPROVED: — DATE

PLANS PREPARED BY:
CIVILTEC engineering inc.
*General Civil, Municipal, Water and Wastewater Engineering, Planning, Construction Management and Surveying*
118 West Lime Avenue
Monrovia, Ca. 91016
Phone: (626) 357-0588
Fax: (626) 303-7957

Battelle
*The Business of Innovation*

CITY OF PASADENA INCORPORATED JUNE 1886

D.S.-209 & 210A

| | | | |
|---|---|---|---|
| DATE FEBRUARY 2009 | SCALE AS SHOWN | PASADENA WATER & POWER CITY OF PASADENA | SHEET NO 57 OF 79 SHEETS |
| DRAWN BY CIVILTEC; DESIGNED BY CIVILTEC; CHECKED BY CIVILTEC; SUBMITTED BY CIVILTEC | | MONK HILL TREATMENT SYSTEM LGAC TANKS | WORK ORDER 02557 / FILE NUMBER E-1670 |
| FIELD BOOKS / CALC BOOKS | | APPROVED / APPROVED | REVISION |

A:\2007\27140-JPL MONKHILL TREATMENT PLANT\DWG\SUBMITTALS\FINAL SUBMITTAL\27140-MONKHILL PID-106.DWG (02-27-09 9:41:34AM)

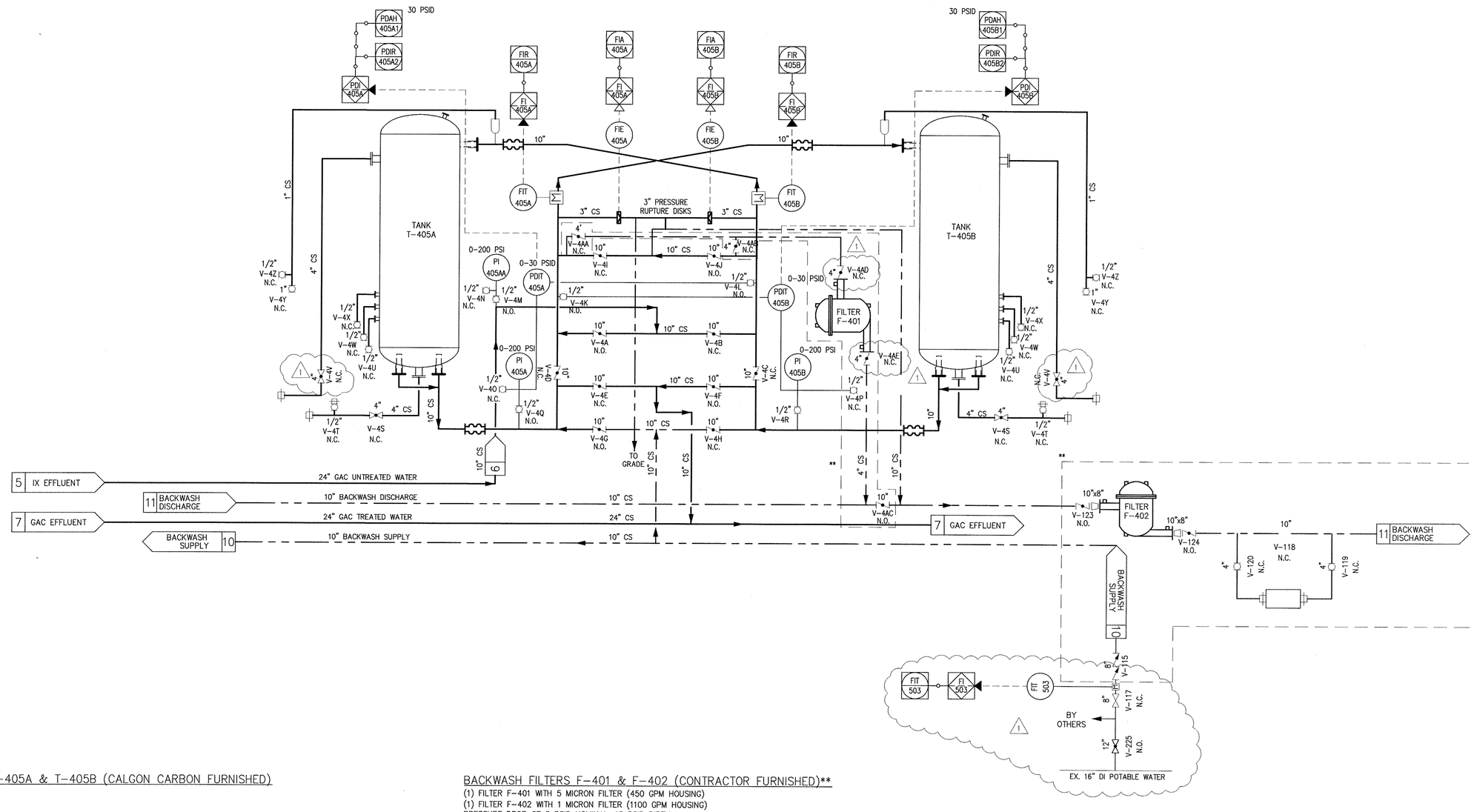


GRANULAR ACTIVATED CARBON TANKS T-405A & T-405B (CALGON CARBON FURNISHED)

(2) VESSELS PER SYSTEM W/ FILTRASORB 300 GAC
1,400 GPM/SYSTEM
PRESSURE DROP OF 11.2 PSID NOMINAL, 30 PSID DIRTY
VESSELS ARE SHOWN IN BACKWASH MODE TANK T-405A IS SHOWN HERE IN BACKWASH POSITION AND T-405B IS SHOWN IN OPERATION.

BACKWASH FILTERS F-401 & F-402 (CONTRACTOR FURNISHED)**

(1) FILTER F-401 WITH 5 MICRON FILTER (450 GPM HOUSING)
(1) FILTER F-402 WITH 1 MICRON FILTER (1100 GPM HOUSING)
PRESSURE DROP OF 5 PSID NOMINAL, 15 PSID DIRTY

PID-107

| REVISION | | |
|---|---|---|
| NO. | DESCRIPTION | DATE |
| 1 | BUILDING DEPARTMENT PLAN CHECK COMMENTS | 01/05/09 |

REGISTERED PROFESSIONAL ENGINEER CHRISTOPHER SHEM HAWES 69578 6/30/2010 CIVIL STATE OF CALIFORNIA

APPROVED BY: C. Shem Hawes 69578 2/25/08
CHRISTOPHER SHEM HAWES RCE DATE
APPROVED: DATE
APPROVED: DATE

PLANS PREPARED BY:
CIVILTEC engineering inc.
*General Civil, Municipal, Water and Wastewater Engineering, Planning, Construction Management and Surveying*
118 West Lime Avenue
Monrovia, Ca. 91016
Phone: (626) 357-0588
Fax: (626) 303-7957

Battelle
*The Business of Innovation*

CITY OF PASADENA INCORPORATED JUNE 1886

D.S.-209 & 210A

| | | | |
|---|---|---|---|
| DATE FEBRUARY 2009 | SCALE AS SHOWN | PASADENA WATER & POWER CITY OF PASADENA | SHEET NO 58 OF 79 SHEETS |
| DRAWN BY CIVILTEC | | MONK HILL TREATMENT SYSTEM LGAC TANKS | WORK ORDER 02557 / FILE NUMBER E-1670 |
| DESIGNED BY CIVILTEC | | | |
| CHECKED BY CIVILTEC | | | |
| SUBMITTED BY CIVILTEC | | | |
| FIELD BOOKS | CALC BOOKS | APPROVED / APPROVED | REVISION |

X:\2007\27140-JPL MONKHILL TREATMENT PLANT\DWG\SUBMITTALS\FINAL SUBMITTAL\27140-MONKHILL PID-107.DWG (02-27-09 9:44:50AM)

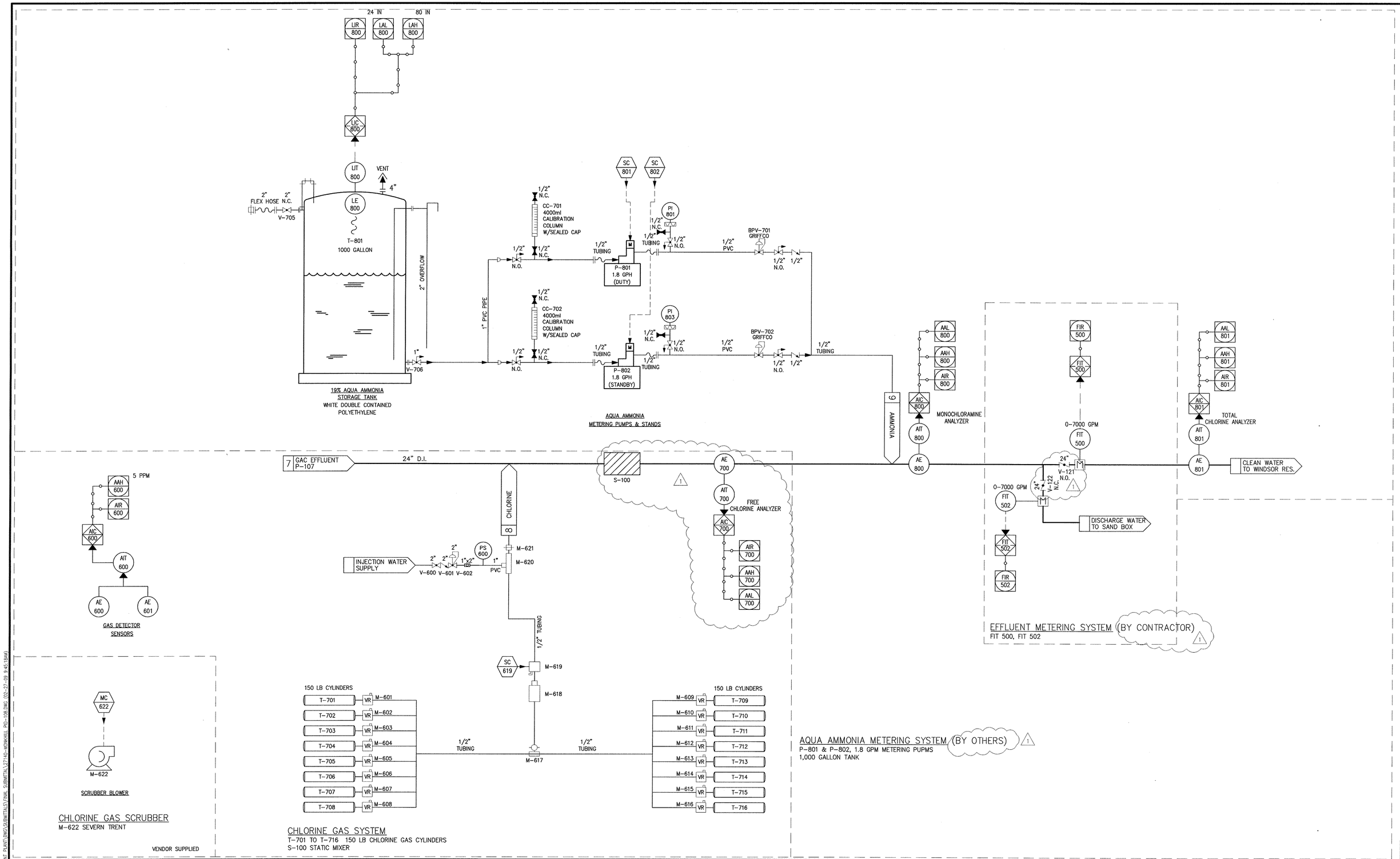


PID-108

| REVISION | | |
|---|---|---|
| NO. | DESCRIPTION | DATE |
| 1 | BUILDING DEPARTMENT PLAN CHECK COMMENTS | 01/05/09 |

REGISTERED PROFESSIONAL ENGINEER CHRISTOPHER SHEM HAWES 69578 6/30/2010 CIVIL STATE OF CALIFORNIA

APPROVED BY: C. Shem Hawes 69578 2/25/08
CHRISTOPHER SHEM HAWES RCE DATE
APPROVED: DATE
APPROVED: DATE

PLANS PREPARED BY:
CIVILTEC engineering inc.
*General Civil, Municipal, Water and Wastewater Engineering, Planning, Construction Management and Surveying*
118 West Lime Avenue
Monrovia, Ca. 91016
Phone: (626) 357-0588
Fax: (626) 303-7957

Battelle
*The Business of Innovation*

CITY OF PASADENA INCORPORATED JUNE 1886

D.S.-209 & 210A

| DATE | SCALE | PASADENA WATER & POWER CITY OF PASADENA | SHEET NO 59 OF 79 SHEETS |
|---|---|---|---|
| FEBRUARY 2009 | AS SHOWN | MONK HILL TREATMENT SYSTEM LGAC TANKS | WORK ORDER 02557 / FILE NUMBER E-1670 |

DRAWN BY / DESIGNED BY / CHECKED BY / SUBMITTED BY / FIELD BOOKS / CALC BOOKS / APPROVED / APPROVED / REVISION

X:\20070-07140-JPL WORKHILL TREATMENT PLANT\DWG\SUBMITTALS\FINAL SUBMITTAL\07140-WORKHILL PID-108.DWG (02-27-09 9:45:19AM)

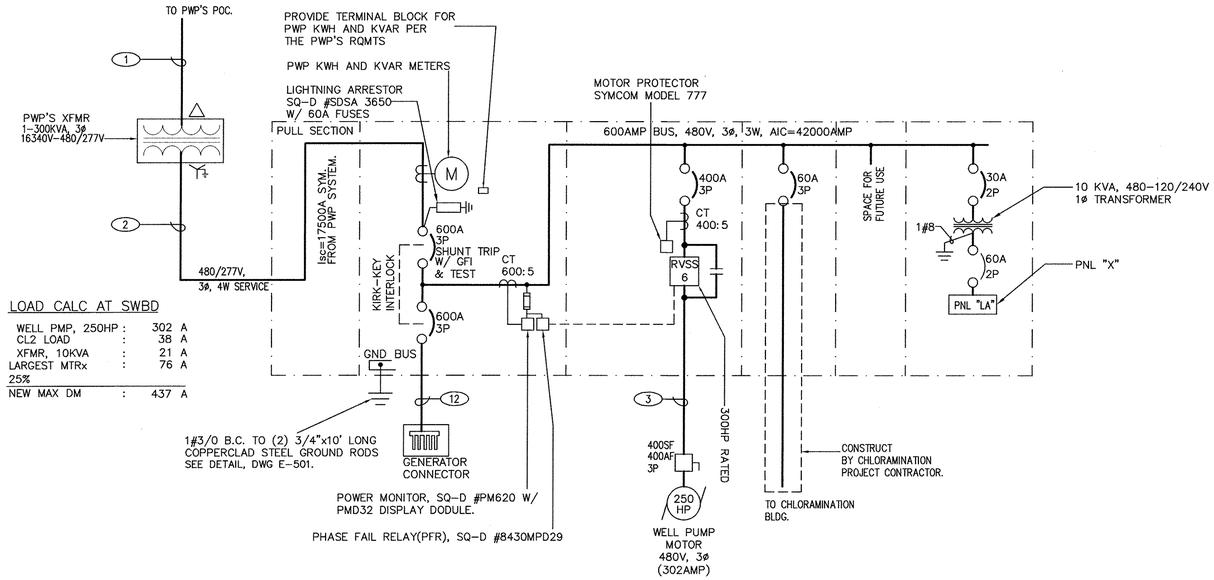


LOAD CALC AT SWBD

| | | |
|---|---|---|
| WELL PMP, 250HP | : | 302 A |
| CL2 LOAD | : | 38 A |
| XFMR, 10KVA | : | 21 A |
| LARGEST MTRx | : | 76 A |
| 25% | | |
| NEW MAX DM | : | 437 A |

ALL CIRCUIT BREAKERS SHALL BE 100% RATED TYPE, IF AVAILABLE.

## SINGLE LINE DIAGRAM

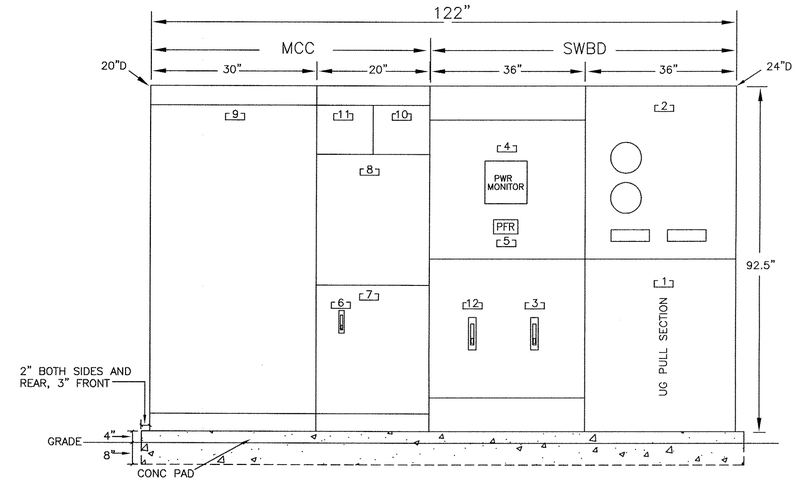


## SWBD AND MCC ELEVATION

NO SCALE

## PANEL SCHEDULE

120/240 VOLTS 1 ø 3 W — 60A MAIN — PANELBOARD LA — LOCATION M.C.C. — FEED TOP — MTG. INSIDE MCC

| LOAD DESCRIPTIONS | WATTAGE ø A | WATTAGE ø B | LTG | REC | MIS | CIR | BKR | A | B | BKR | CIR | MIS | REC | LTG | WATTAGE ø A | WATTAGE ø B | LOAD DESCRIPTIONS |
|---|---|---|---|---|---|---|---|---|---|---|---|---|---|---|---|---|---|
| (E) YARD/EXT. LIGHTS | 1000 | | | | 1 | 1 | 20 | | | 20 | 2 | 1 | | | 500 | | SPARE |
| INT. LIGHTS | | 400 | | | 1 | 3 | 20 | | | 20 | 4 | | 4 | | | 720 | RECEPT |
| SPACE | | | | | 1 | 5 | | | | 20 | 6 | 1 | | | 120 | | (E) RTU |
| | | | | | | 7 | | | | 8 | 1 | | | | | | SPACE |
| | | | | | | 9 | | | | 10 | | | | | | | |
| | | | | | | 11 | | | | 12 | | | | | | | |
| | 1000 | 400 | | | | TOTAL | | | | TOTAL | | | | | 620 | 720 | |
| | PHASE TOTAL | | TOTAL LOAD | | | | | | | | | | | | | | |
| | 1620 | 1120 | 2.7KVA (11.4AMP) | | | | | | | | | | | | | | |

## FEEDER SCHEDULE (X)

1. (2)4"C, FROM PWP'S POC TO PWP XFMR ENCLOSURE, PROVIDED PER THE PWP'S RQMTS.
2. (3) 5"C, FROM PWP XFMR ENCLOSURE TO SWBD, PROVIDED PER THE PWP'S RQMTS.
3. 3"C-2(3#250MCM)+1#1GND. FROM MCC TO WELL PUMP MOTOR.
4. 3/4"C-12#14+1#14GND. FROM MCC TO "PS/HPS", "T-STAT", "SOLENOID", "SPC HTR, AT FIELD. (CONTROL)
5. 1"C-XDCR & XMTR CABLE, FROM "LIT101", "PIT101", "FIT102" TO RTU. PROVIDE THE XDCR & XMTR CABLES PER THE EQUIPMENT MFR'S INSTRUCTIONS. (SIGNAL)
6. 3/4"C-3#12+1#12GND, FROM MCC TO RTU.
7. 3/4"C-15#14+1#14GND, FROM MCC TO RTU. (D/I, D/O)
8. 3/4"C-2#8+1#10GND, FROM MCC TO FLOOD LIGHTS.
9. 3"C-60PR#18, INDIVIDUALLY TWST SHLD, FROM SCADA INTERFACE BOX TO RTU. (A/I FROM GAC)
10. 3/4"C-3PR#18, INDIVIDUALLY TWST SHLD, FROM "FIT501", "FIT502" TO RTU.
11. 3/4"C-2PR#18, INDIVIDUALLY TWST SHLD, FROM "FIT500" TO RTU.
12. 2(3"C-3#300MCM+1#1GND), FROM SWBD TO GEN CONNECTOR.

## CONSTRUCTION NOTES

1. REMOVE UNUSED CONDUITS AND WIRING COMPLETELY. EXIST SECURITY RELATED SYSTEM, EQUIPMENT, CONDUITS AND WIRING TO REMAIN.
2. REMOVE UNUSED ELECTRICAL EQUIPMENT AND COMPONENTS IN THE ROOM COMPLETELY.
3. REMOVE EXIST MCC AND RELATED CONDUITS AND WIRING COMPLETELY.
4. PROVIDE UNDERGROUND PULLBOX, 10"X17"X36"D, 3 1/2(T) PB BY BROOKS.
5. EXIST RTU(PLC), LIQ-5 OF TESCO. MODIFY THE RTU BY FURNISHING NECESSARY MODULES PER THE DWG E-104. CONSULT THE MFR AS NECESSARY.
6. LIGHT FIXTURE, PENDANT, GENERAL PURPOSE, INDUSTRIAL, (4)-32W TUBES, 10% HARMONIC ELECTRONIC BALLAST, EJ232-120GEB10 BY LITHONIA. TYP 4 EA.
7. WELL LEVEL (DEPTH) TRANSDUCER LOCATED AT BUTTOM OF THE WELL. SUBMERCIBLE PRESSURE TRANSDUCER BY KPSI W/ CABLE AND CABLE HANGER. (BY OTHERS)
8. 250W HPS AREA LIGHT FIXTURE ON 30' POLE. SEE DETAIL, DWG E-501. TYP 4 EA.
9. PROVIDE UNDERGROUND PULLBOX, 9 5/8"X16"X12"D, 1 PB BY BROOKS.
10. 70W HIGH PRESSURE SODIUM LAMP W/ INTERNAL REFLECTOR, PRISMATIC POLYCARBONATED REFRACTOR, BUILT-IN 0-20FC ADJ PHOTOCELL CONTROL, UL APPROVED FOR WET LOCATION. HUBBELL #NRG-307 OR APPROVED EQUAL.
11. PROVIDE SURFACE PWR RECEPTACLE OUTLET, 125V, 20AMP, NEMA 5-20R IN CAST ALUM BOX SST COVERPLATE. TYP OF 4 EA.

## CONSTRUCTION NOTES FOR SWBD AND MCC

(SEE DWG E-1 FOR OTHER NOTES.)

1. APPROXIMATE DIMENSIONS ARE SHOWN FOR REFERENCE ONLY. VERIFY THE DIMENSIONS THROUGH THE EQUIPMENT MFRS.
2. SWBD SHALL BE NEMA 1 TYPE CONSTRUCTION. MCC SHALL BE NEMA 12 TYPE CONSTRUCTION. WIRING NEMA CLASS IIS, TYPE B
3. SWBD BUS VOLTAGE SHALL BE 3ø, 4W HERTZ 60HZ MCC BUS VOLTAGE SHALL BE 3ø, 3W HERTZ 60HZ
4. GROUND BUS 1/4" X 1" TIN PLATED COPPER(TPC)
5. MCC BUS RATING. VERT. 400A HORIZ. 600A TPC
6. BUS BRACING AND BKR RATINGS AT MIN. 42,000 RMS SYM. AMP.
7. INDIVIDUAL 480/120V CTRL PWR XFMR FOR EACH STARTER
8. INCLUDE SURGE PROTECTOR AT EACH MOTOR STARTER.
9. CKT BKR TYPE MCP FOR EACH STARTER, THERMAL MAGNETIC TYPE BKR FOR EACH FEEDER BKR'S.
10. PROVIDE NAMEPLATE FOR EACH COMPARTMENT.
11. OVERLOAD HEATER ELEMENTS FOR EACH STARTER.
12. ANSI #61 FINISH.
13. ALL CONTROL/SIGNAL CONDUCTORS SHALL BE ENCLOSED IN PVC WIRE DUCTS W/ COVER.
14. SWBD AND MCC SHALL BE ANCHORED TO MEET SEISMIC ZONE 4 RQMTS. SUBMIT THE REGISTERED STRUCTURAL ENGINEER'S CALC. AS THE PART OF THE SHOP DRAWING SUBMITTAL, FOR AN APPROVAL..
16. SITE AMBIENT TEMP IS 125°F, HUMIDITY IS 20 TO 95%, ELEVATION IS ABOUT 2000 FT.
17. SQ-D MODEL 6, OR APPROVED EQUAL.
18. UG PULL SECTION & UTILITY METER SECTION SHALL MEET EUSERC RQMTS.

## NAMEPLATE SCHEDULE

- 1 UNDERGROUND PULL SECTION
- 2 UTILITY METER SECTION
- 3 MAIN BREAKER, 600AT
- 4 DIGITAL POWER METER
- 5 PHASE FAILURE RELAY
- 6 30A/2P XFMR PRI BKR
- 7 10KVA XFMR, 480-240/120V, 1ø, 3W
- 8 PNL "P", 240/120V, 1ø, 3W
- 9 WINDSOR WELL PUMP STARTER
- 10 60A/2P BKR FOR PNL "PA",
- 11 SPACE(FUTURE USE)
- 12 STANDBY PWR BKR, 600AT

E-101

| REVISION | | |
|---|---|---|
| NO. | DESCRIPTION | DATE |
| | | |
| | | |
| | | |

REGISTERED PROFESSIONAL ENGINEER CHAE YOUNG LEE No E 12266 EXP. Sep. 30, 2010 ELECTRICAL STATE OF CALIFORNIA

APPROVED BY: CHAE YOUNG LEE 12266 EE — 5/2/09 DATE
APPROVED: — DATE
APPROVED: — DATE

PLANS PREPARED BY: CIVILTEC engineering inc.
*General Civil, Municipal, Water and Wastewater Engineering, Planning, Construction Management and Surveying*
118 West Lime Avenue
Monrovia, Ca. 91016
Phone: (626) 357-0588
Fax: (626) 303-7957

Battelle — The Business of Innovation

CITY OF PASADENA INCORPORATED JUNE 1886

D.S.-209 & 210A

| | | | |
|---|---|---|---|
| DATE: NOVEMBER 2008 | SCALE: AS SHOWN | PASADENA WATER & POWER CITY OF PASADENA | SHEET NO 61 OF 79 SHEETS |
| DRAWN BY CALPOWER; DESIGNED BY CALPOWER; CHECKED BY CIVILTEC; SUBMITED BY CIVILTEC | | WINDSOR WELL SINGLE LINE DIAGRAM, ELEVATION, SCHEDULE | WORK ORDER 02557 / FILE NUMBER E-1670 |
| FIELD BOOKS | CALC BOOKS | APPROVED / APPROVED | REVISION |

H:\2007\27140-JPL MONRAIL TRC\NEST PLANT\DWG\SUBMITTALS\FINAL SUBMITTAL\E-101.DWG (02-27-09 9:48:17AM)

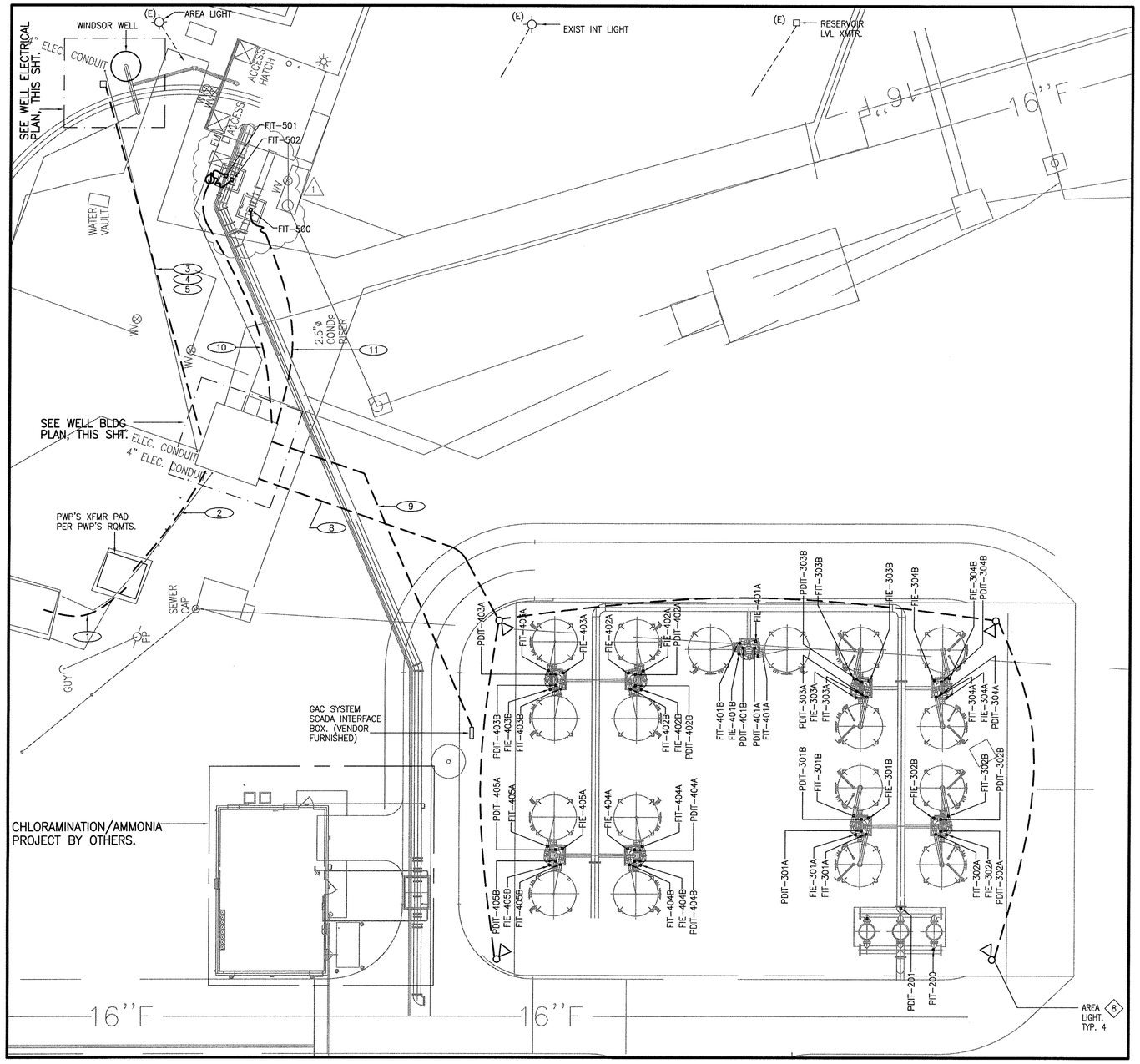


## WINDSOR SITE PLAN – ELECTRICAL

SCALE 1/16"=1'-0"

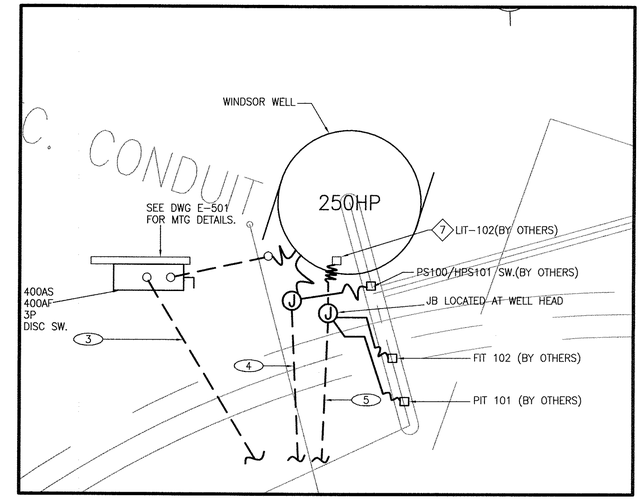


## ENLARGED WELL SITE PLAN

SCALE 1/4"=1'-0"

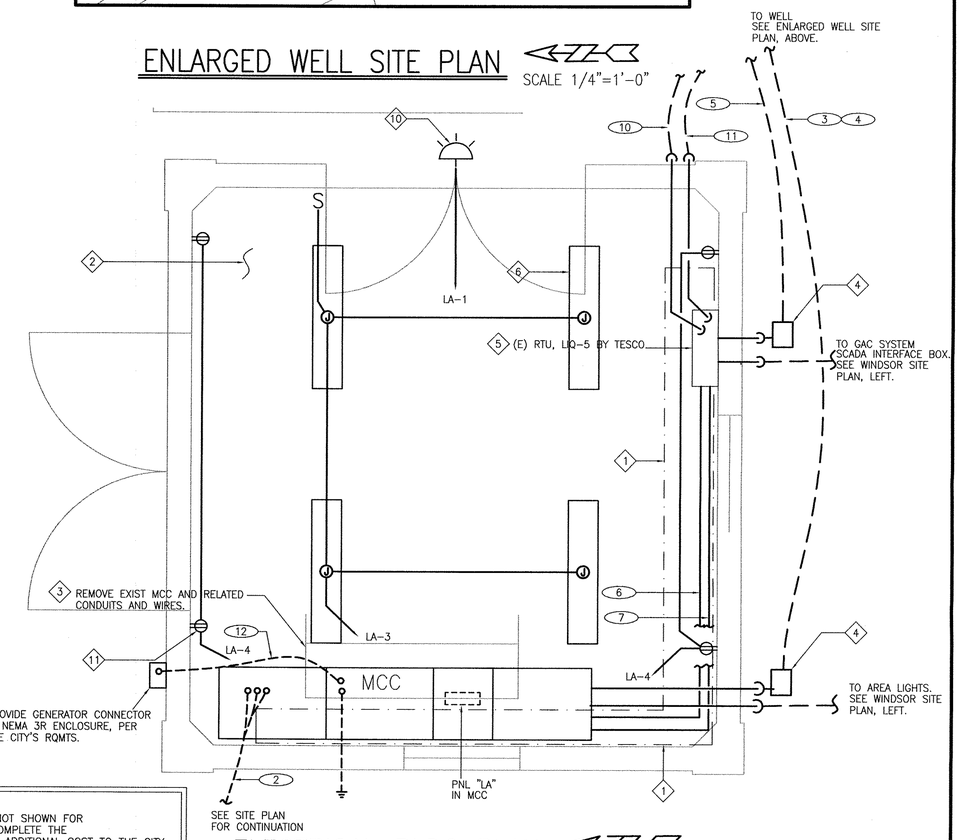


## ELECTRICAL BLDG PLAN

SCALE 1/2"=1'-0"

**SPECIAL NOTE**

ALL THE ELECTRICAL DRAWINGS ARE SCHEMATIC. CONDUITS OR WIRINGS ARE NOT SHOWN FOR SOME EQUIPMENT/DEVICES. IT SHALL BE CONTRACTOR'S RESPONSIBILITY TO COMPLETE THE PROJECT CONSTRUCTION PER DRAWINGS AND SPEC AT HIS DISCRETION AT NO ADDITIONAL COST TO THE CITY. FOR ANY DESCREPACIES, CONTRACTOR SHALL SUBMIT REQUESTS FOR CLARIFICATION DURING BIDDING PHASE.

**NOTES**

SEE DWG E-101 FOR FEEDER SCHEDULE AND CONSTRUCTION NOTES.

E-102

| REVISION | | |
|---|---|---|
| NO. | DESCRIPTION | DATE |
| 1 | BUILDING DEPARTMENT PLAN CHECK COMMENTS | 01/05/09 |

REGISTERED PROFESSIONAL ENGINEER CHAE YOUNG LEE No E 12266 EXP. Sep.30.2010 ELECTRICAL STATE OF CALIFORNIA

APPROVED BY: CHAE YOUNG LEE 12266 EE — 3/2/09 DATE
APPROVED: DATE
APPROVED: DATE

PLANS PREPARED BY:
CIVILTEC engineering inc.
*General Civil, Municipal, Water and Wastewater Engineering, Planning, Construction Management and Surveying*
118 West Lime Avenue
Monrovia, Ca. 91016
Phone: (626) 357-0588
Fax: (626) 303-7957

Battelle
*The Business of Innovation*

CITY OF PASADENA INCORPORATED JUNE 1886

D.S.-209 & 210A

| DATE | SCALE | PASADENA WATER & POWER CITY OF PASADENA | SHEET NO 62 OF 79 SHEETS |
|---|---|---|---|
| NOVEMBER 2008 | AS SHOWN | WINDSOR WELL | WORK ORDER 02557 / FILE NUMBER E-1670 |
| DRAWN BY CALPOWER | | SITE, BLDG PLANS – ELECTRICAL | |
| DESIGNED BY CALPOWER | | | |
| CHECKED BY CIVILTEC | | | |
| SUBMITTED BY CIVILTEC | | | |
| FIELD BOOKS | CALC BOOKS | APPROVED / APPROVED | REVISION |

X:\2007\27140-JR_MONROVIA_TREATMENT PLANT\DWGS\SUBMITTALS\FINAL SUBMITTAL\E-102.DWG (02-27-09 9:46:16AM)

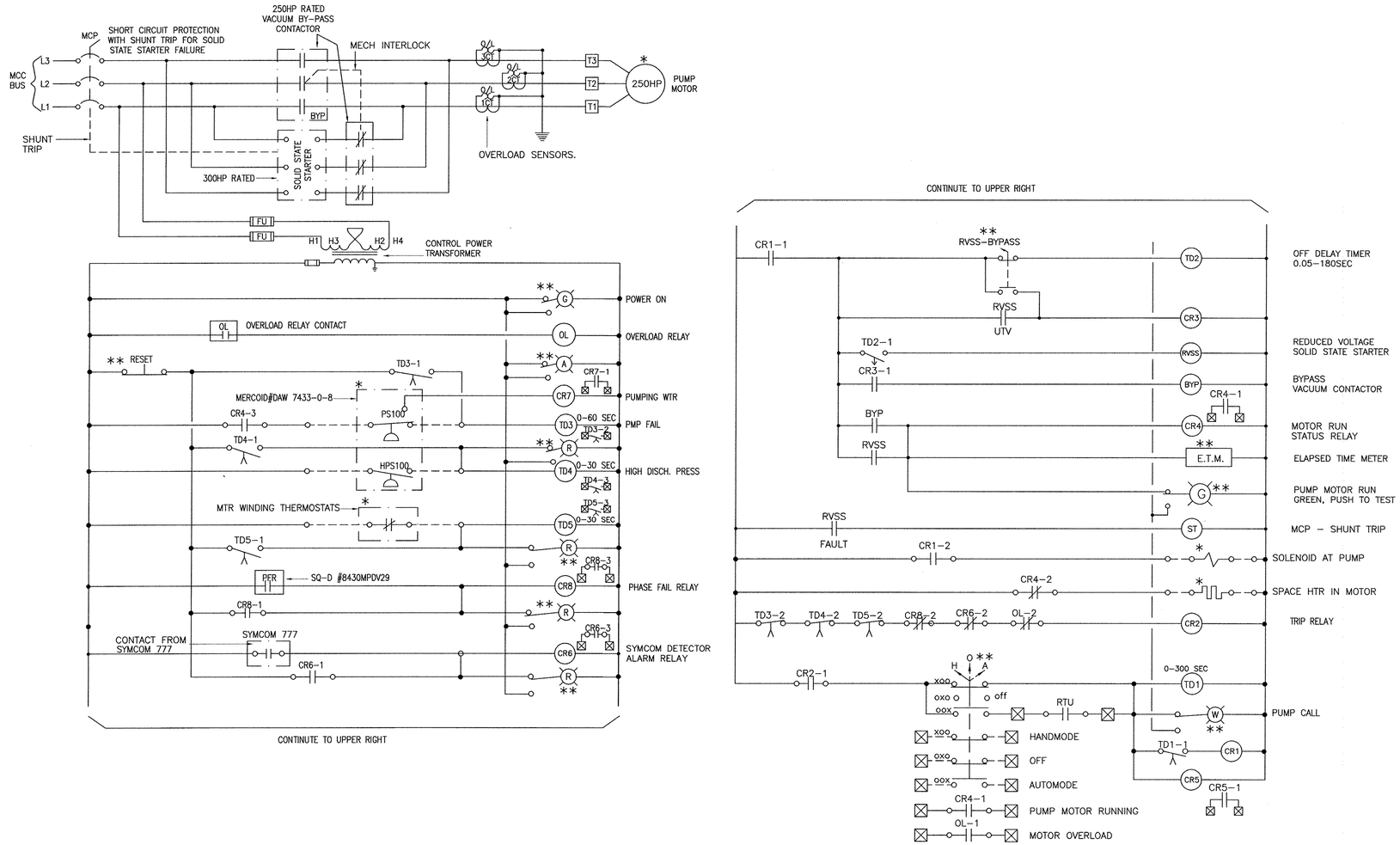


## WINDSOR WELL PUMP MOTOR

* : DEVICE AT FIELD AND FIELD WIRING (BY THE EQUIPMENT INSTALLATION CONTRACTOR)

**: DEVICE AT FRONT SURFACE OF MCC.

⊠ : TERMINAL IN THE TELEMETRY SECTION FOR RTU INTERFACE. PROVIDE THE TERMINAL NUMBERS IN THE SHOP DWG FOR AN APPROVAL. CONTRACTOR SHALL CONSULT THE CITY FOR ADDITIONAL I/O OTHER THAN THE SHOWN ON THIS SCHEMATIC. PROVIDE SPARE TERMINALS (50EA) IN ADDITION TO THE TERMINALS SHOWN. TERMINALS SHALL BE ARRANGED ON ONE SIDE OF THE BACK PANEL IN THE TELEMETRY SECTION NOT TO INTERFERE WITH THE RTU EQUIPMENT INSTALLATION.

### SPECIAL NOTES

THIS DIAGRAM IS PREPARED FOR THE CONTROL REFERENCE ONLY. THE CONTRACTOR SHALL BE RESPONSIBLE FOR PREPARATION OF THE FINAL DIAGRAM AND SUBMITTING THE DIAGRAM AS A PART OF THE SHOP DRAWING SUBMITTAL BASED ON THE CITY AND THE PUMP SYSTEM MFR'S RQMTS AND THE DEVICES MFR'S INSTRUCTIONS, PRIOR TO ANY ACTIVITIES.

E-103

| REVISION | | |
|---|---|---|
| NO. | DESCRIPTION | DATE |
| | | |
| | | |
| | | |
| | | |

REGISTERED PROFESSIONAL ENGINEER CHAE YOUNG LEE No E 12266 EXP. SEP. 30, 2010 ELECTRICAL STATE OF CALIFORNIA

APPROVED BY: CHAE YOUNG LEE 12266 EE 3/2/09 DATE
APPROVED: DATE
APPROVED: DATE

PLANS PREPARED BY:
CIVILTEC engineering inc.
*General Civil, Municipal, Water and Wastewater Engineering, Planning, Construction Management and Surveying*
118 West Lime Avenue
Monrovia, Ca. 91016
Phone: (626) 357-0588
Fax: (626) 303-7957

Battelle
*The Business of Innovation*

CITY OF PASADENA INCORPORATED JUNE 1886

D.S.-209 & 210A

| DATE | SCALE | PASADENA WATER & POWER CITY OF PASADENA | SHEET NO 63 OF 79 SHEETS |
|---|---|---|---|
| NOVEMBER 2008 | AS SHOWN | | |
| DRAWN BY CALPOWER | | WINDSOR WELL WELL PUMP CONTROL SCHEMATIC | WORK ORDER 02557 / FILE NUMBER E-1670 |
| DESIGNED BY CALPOWER | | | |
| CHECKED BY CIVILTEC | | | |
| SUBMITTED BY CIVILTEC | | | |
| FIELD BOOKS / CALC BOOKS | | APPROVED / APPROVED | REVISION |

A:\2007\27140-JPL MONROVILL TREATMENT PLANT\DWG\SUBMITTALS\FINAL SUBMITTAL\E-103.DWG (02-27-09 9:56:48AM)

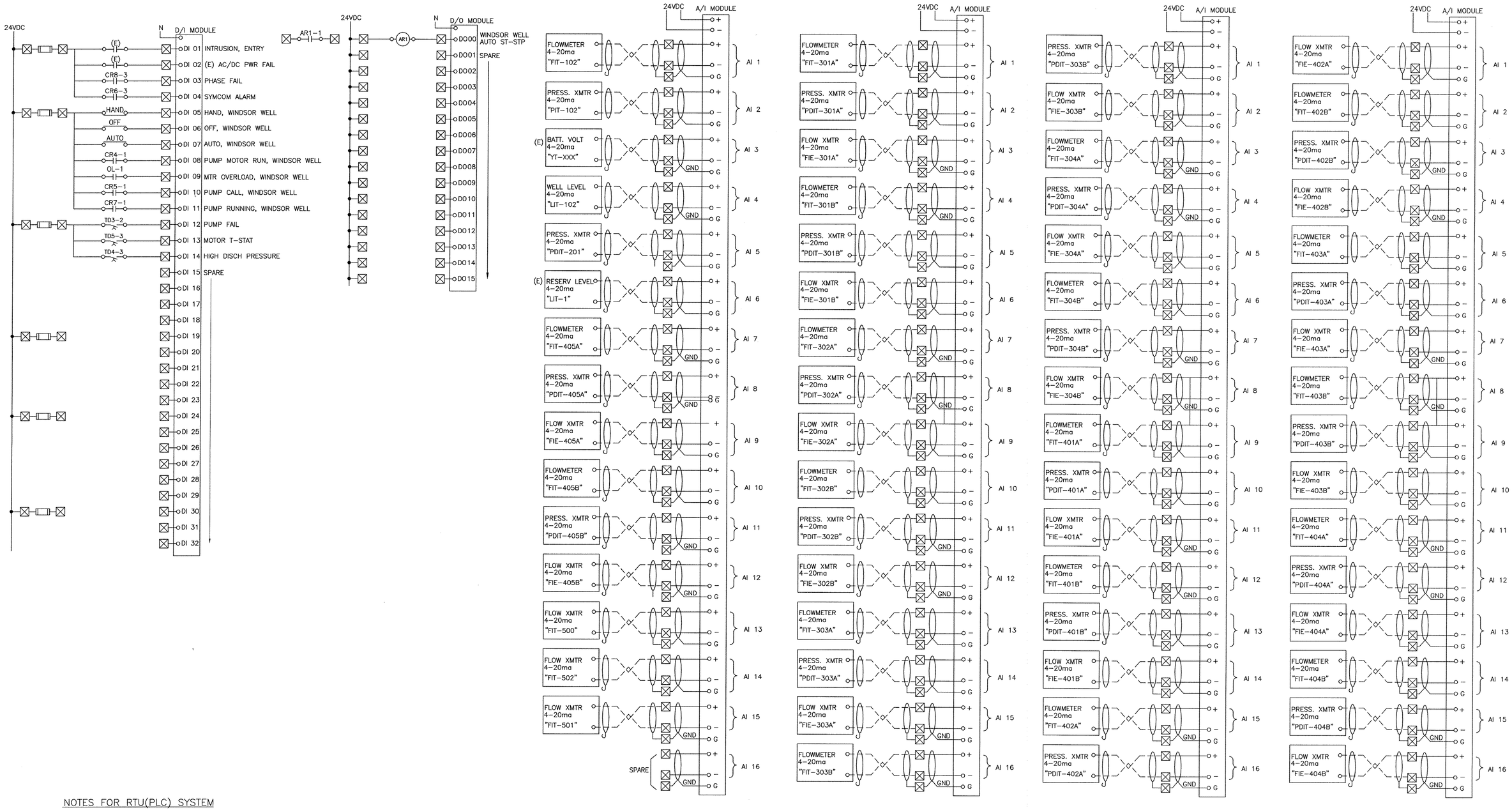


## NOTES FOR RTU(PLC) SYSTEM

1. MODIFY EXIST RTU BY PROVIDING NECESSARY MODULES AND ACCESSORIES TO ACCOMMODATE I/O'S AS SHOWN.
2. RTU AND SCADA SYSTEM PROGRAMMING BY THE CITY.

## SYMBOLS

(SEE DWG E-100 FOR OTHER SYMBOLS)

- ☒ TERMINAL FOR RTU(PLC) CONNECTION
- — — FIELD WIRING (BY CONTRACTOR OR RESPONSIBLE VENDOR)
- ▭ FUSE AT TERMINAL BLOCK

# WINDSOR WELL

E-104

| REVISION | | |
|---|---|---|
| NO. | DESCRIPTION | DATE |
| | | |
| | | |
| | | |
| | | |

REGISTERED PROFESSIONAL ENGINEER CHAE YOUNG LEE No. E 12266 EXP. DEC 31, 2010 ELECTRICAL STATE OF CALIFORNIA

APPROVED BY:
CHAE YOUNG LEE 12266 EE — DATE 3/2/09
APPROVED: — DATE
APPROVED: — DATE

PLANS PREPARED BY:
CIVILTEC engineering inc.
*General Civil, Municipal, Water and Wastewater Engineering, Planning, Construction Management and Surveying*
118 West Lime Avenue
Monrovia, Ca. 91016
Phone: (626) 357-0588
Fax: (626) 303-7957

Battelle
*The Business of Innovation*

CITY OF PASADENA INCORPORATED JUNE 1886

D.S.-209 & 210A

| | | | |
|---|---|---|---|
| DATE NOVEMBER 2008 | SCALE AS SHOWN | PASADENA WATER & POWER CITY OF PASADENA | SHEET NO 64 OF 79 SHEETS |
| DRAWN BY CALPOWER; DESIGNED BY CALPOWER; CHECKED BY CIVILTEC; SUBMITTED BY CIVILTEC | | WINDSOR WELL PLC INPUT/OUTPUT DIAGRAM | WORK ORDER 02557 / FILE NUMBER E-1670 |
| FIELD BOOKS | CALC BOOKS | APPROVED / APPROVED | REVISION |

K:\2007\27140-PL MONROVIA TRENCHNET PLANT\DWG\SUBMITTALS\SUBMITTALS\FINAL SUBMITTAL\E-104.DWG (02-27-09 9:57:27AM)

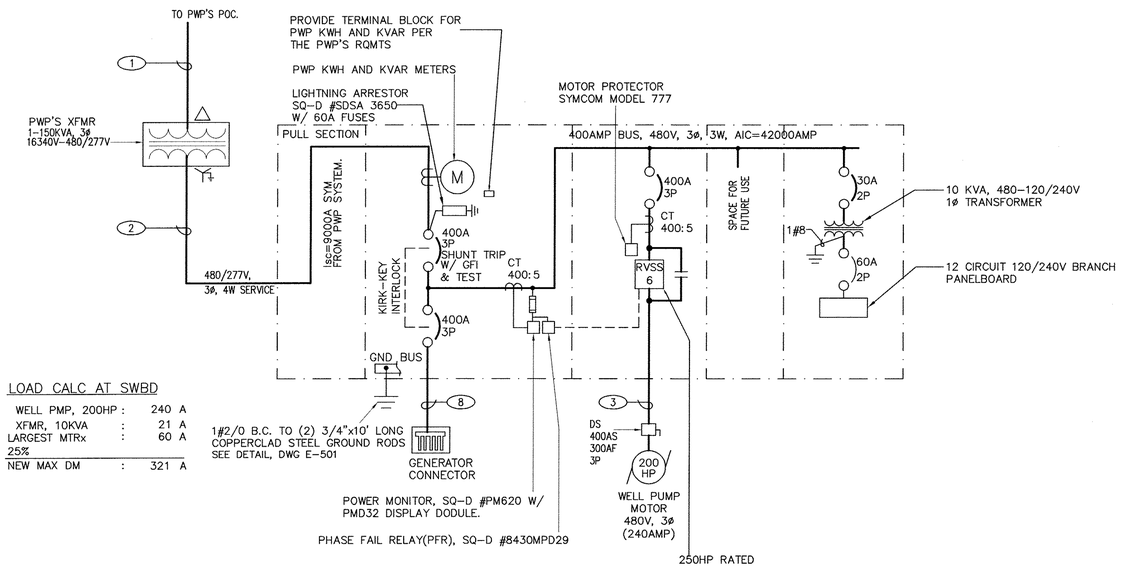


LOAD CALC AT SWBD

| | | |
|---|---|---|
| WELL PMP, 200HP | : | 240 A |
| XFMR, 10KVA | : | 21 A |
| LARGEST MTRx 25% | : | 60 A |
| NEW MAX DM | : | 321 A |

ALL CIRCUIT BREAKERS SHALL BE 100% RATED TYPE.

## SINGLE LINE DIAGRAM

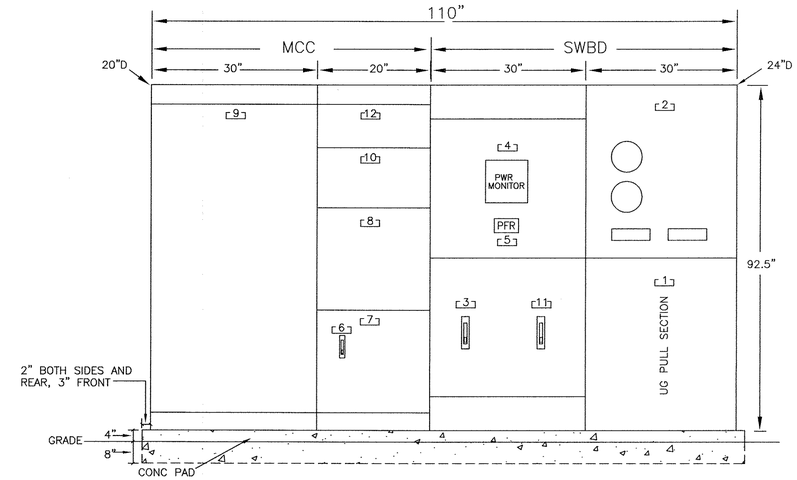


## SWBD AND MCC ELEVATION

NO SCALE

## PANEL SCHEDULE

120/240 VOLTS 1 ø 3 W — PANELBOARD P — FEED TOP
60A MAIN — LOCATION M.C.C. — MTG. INSIDE MCC

| LOAD DESCRIPTIONS | WATTAGE ø A | WATTAGE ø B | LTG | RECS | MISC | CIR | BKR | A B | BKR | CIR | MISC | RECS | LTG | WATTAGE ø A | WATTAGE ø B | LOAD DESCRIPTIONS |
|---|---|---|---|---|---|---|---|---|---|---|---|---|---|---|---|---|
| (E) YARD/EXT. LIGHTS | 1000 | | | | 1 | 1 | 20 | | 20 | 2 | | 4 | | 720 | | RECEPT |
| INT. LIGHTS | | 600 | 6 | | | 3 | 20 | | 20 | 4 | 1 | | | | 800 | (E) EXH FAN |
| SPARE | 500 | | | | 1 | 5 | 20 | | 20 | 6 | 1 | | | 120 | | (E) RTU |
| SPACE | | | | | | 7 | | | 20 | 8 | 1 | | | | 500 | SPARE |
| | | | | | | 9 | | | | 10 | | | | | | SPACE |
| | | | | | | 11 | | | | 12 | | | | | | |
| | 1500 | 600 | | | | TOTAL | | | TOTAL | | | | | 820 | 1300 | |
| | PHASE TOTAL | | TOTAL LOAD | | | | | | | | | | | | | |
| | 2320 | 1900 | 4.2KVA (17.6AMP) | | | | | | | | | | | | | |

## CONSTRUCTION NOTES FOR SWBD AND MCC

(SEE DWG E-1 FOR OTHER NOTES.)

1. APPROXIMATE DIMENSIONS ARE SHOWN FOR REFERENCE ONLY. VERIFY THE DIMENSIONS THROUGH THE EQUIPMENT MFRS.
2. SWBD SHALL BE NEMA 1 TYPE CONSTRUCTION. MCC SHALL BE NEMA 12 TYPE CONSTRUCTION. WIRING NEMA CLASS IIS, TYPE B
3. SWBD BUS VOLTAGE SHALL BE 3ø, 4W HERTZ 60HZ MCC BUS VOLTAGE SHALL BE 3ø, 3W HERTZ 60HZ
4. GROUND BUS 1/4" X 1" TIN PLATED COPPER(TPC)
5. MCC BUS RATING. VERT. 300A HORIZ. 600A TPC
6. BUS BRACING AND BKR RATINGS AT MIN. 42,000 RMS SYM. AMP.
7. INDIVIDUAL 480/120V CTRL PWR XFMR FOR EACH STARTER
8. INCLUDE SURGE PROTECTOR AT EACH MOTOR STARTER.
9. CKT BKR TYPE MCP FOR EACH STARTER, THERMAL MAGNETIC TYPE BKR FOR EACH FEEDER BKR'S.
10. PROVIDE NAMEPLATE FOR EACH COMPARTMENT.
11. OVERLOAD HEATER ELEMENTS FOR EACH STARTER.
12. ANSI #61 FINISH.
13. ALL CONTROL/SIGNAL CONDUCTORS SHALL BE ENCLOSED IN PVC WIRE DUCTS W/ COVER.
14. SWBD AND MCC SHALL BE ANCHORED TO MEET SEISMIC ZONE 4 RQMTS. SUBMIT THE REGISTERED STRUCTURAL ENGINEER'S CALC. AS THE PART OF THE SHOP DRAWING SUBMITTAL, FOR AN APPROVAL..
16. SITE AMBIENT TEMP IS 125°F, HUMIDITY IS 20 TO 95%, ELEVATION IS ABOUT 2000 FT.
17. SQ-D MODEL 6, OR APPROVED EQUAL.
18. UG PULL SECTION & UTILITY METER SECTION SHALL MEET EUSERC RQMTS.

## NAMEPLATE SCHEDULE

- 1 UNDERGROUND PULL SECTION
- 2 UTILITY METER SECTION
- 3 MAIN BREAKER, 400AT
- 4 DIGITAL POWER METER
- 5 PHASE FAILURE RELAY
- 6 30A/2P XFMR PRI BKR
- 7 10KVA XFMR, 480-240/120V, 1ø, 3W
- 8 PNL "P", 240/120V, 1ø, 3W
- 9 WELL PUMP NO.52 STARTER
- 10 CONTROL RELAYS
- 11 STANBY PWR BKR, 400AT
- 12 SPACE FOR FUTURE USE

E-201

| REVISION | | |
|---|---|---|
| NO. | DESCRIPTION | DATE |
| | | |
| | | |
| | | |
| | | |

REGISTERED PROFESSIONAL ENGINEER CHAE YOUNG LEE No E 12266 EXP. SEP 30, 2010 ELECTRICAL STATE OF CALIFORNIA

APPROVED BY: CHAE YOUNG LEE 12266 EE — 3/2/09 DATE
APPROVED: — DATE
APPROVED: — DATE

PLANS PREPARED BY: CIVILTEC engineering inc.

*General Civil, Municipal, Water and Wastewater Engineering, Planning, Construction Management and Surveying*

118 West Lime Avenue
Monrovia, Ca. 91016
Phone: (626) 357-0588
Fax: (626) 303-7957

Battelle
*The Business of Innovation*

CITY OF PASADENA INCORPORATED JUNE 1886

D.S.-209 & 210A

| | | | |
|---|---|---|---|
| DATE NOVEMBER 2008 | SCALE AS SHOWN | PASADENA WATER & POWER CITY OF PASADENA | SHEET NO 65 OF 79 SHEETS |
| DRAWN BY CALPOWER; DESIGNED BY CALPOWER; CHECKED BY CIVILTEC; SUBMITTED BY CIVILTEC | | WELL 52 SINGLE LINE DIAGRAM, ELEVATION, SCHEDULE | WORK ORDER 02557 / FILE NUMBER E-1670 |
| FIELD BOOKS | CALC BOOKS | APPROVED / APPROVED | REVISION |

X:\2007\27140-PL MEMPHIS TREATMENT PLANT\DWG\SUBMITTALS\FINAL SUBMITTAL\E-201.DWG (02-27-09 9:55:10AM)

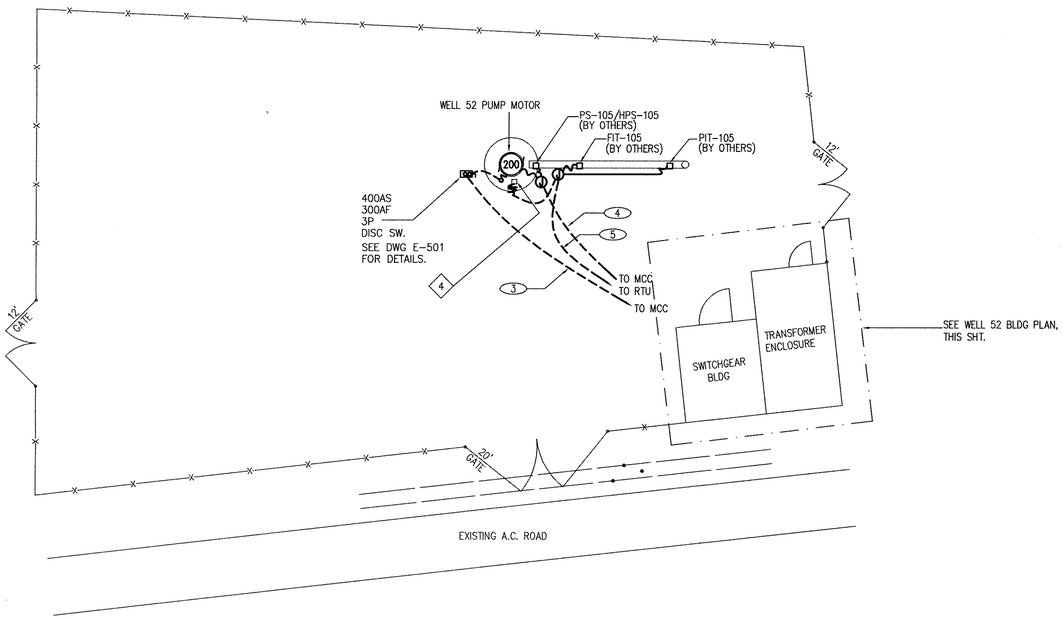


## ELECTRICAL SITE PLAN – WELL 52

SCALE: 1"=10'-0"

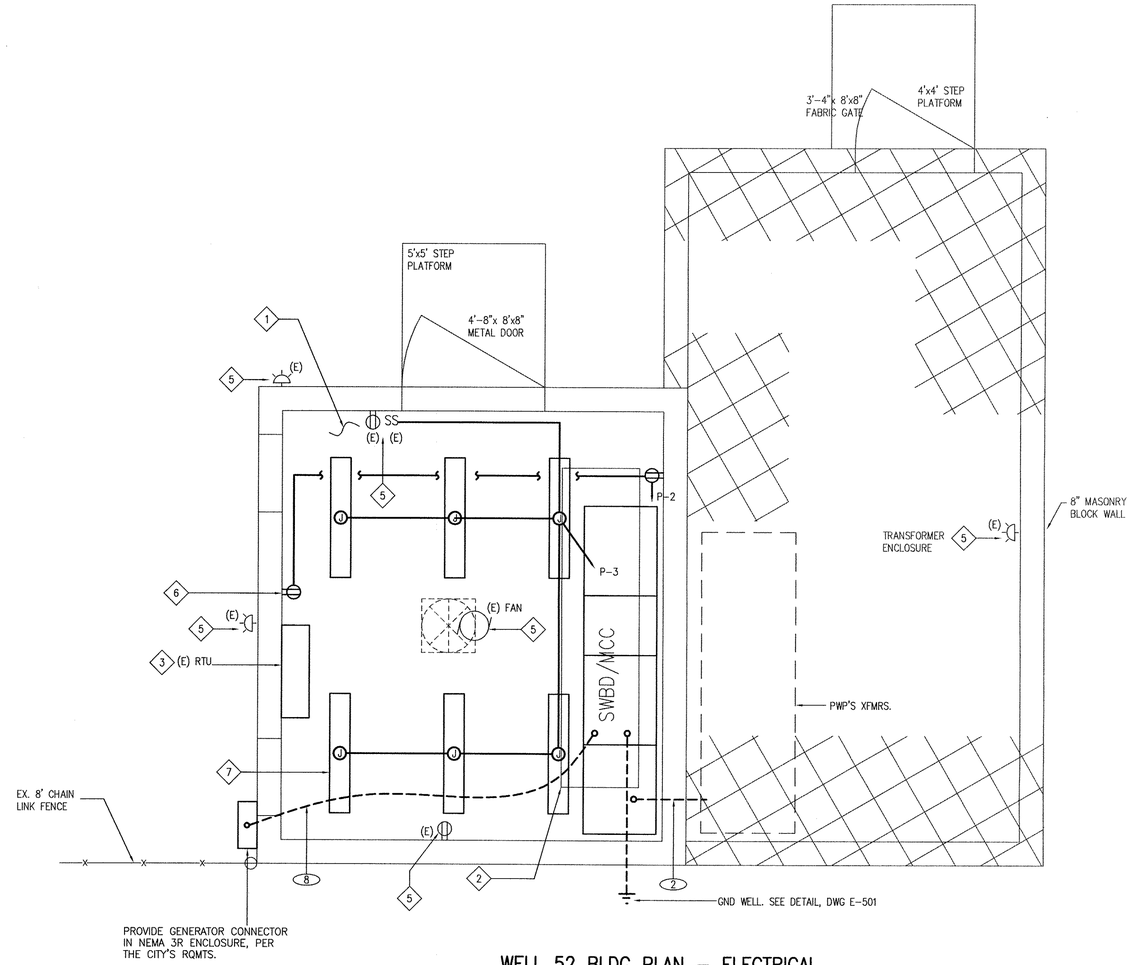


## WELL 52 BLDG PLAN – ELECTRICAL

SCALE: 1/2"=1'-0"

## FEEDER SCHEDULE (X)

1. (2)4"C, FROM PWP'S POC TO PWP XFMR ENCLOSURE, PROVIDED PER THE PWP'S RQMTS.
2. (2) 5"C, FROM PWP XFMR ENCLOSURE TO SWBD, PROVIDED PER THE PWP'S RQMTS.
3. 3"C-3#350MCM+1#3GND. FROM MCC TO WELL PUMP MOTOR.
4. 3/4"C-12#14+1#14GND. FROM MCC TO "PS/HPS", "T-STAT", "SOLENOID", "SPC HTR, 3/4"C-XDCR CABLE, FROM XDCR TO RTU, PROVIDE XDCR CABLE PER THE MFR'S INSTRUCTIONS. AT FIELD. (CONTROL)
5. 1"C-XDCR & XMTR CABLE, FROM "LIT101", "PIT101", "FIT102" TO RTU. PROVIDE THE XDCR & XMTR CABLES PER THE EQUIPMENT MFR'S INSTRUCTIONS. (SIGNAL)
6. 3/4"C-3#12+1#12GND, FROM MCC TO RTU.
7. 3/4"C-15#14+1#14GND, FROM MCC TO RTU. (D/I, D/O)
8. 3"C-3#500MCM+1#3GND. FROM MCC TO GEN CONNECTOR.

## CONSTRUCTION NOTES

1. REMOVE UNUSED ELECTRICAL EQUIPMENT AND COMPONENTS IN THE ROOM COMPLETELY. ALL THE REMAINING EQUIPMENT OR COMPONENTS ARE NOT NECESSARILY SHOWN.
2. REMOVE EXIST MCC AND RELATED CONDUITS AND WIRING COMPLETELY. MODIFY/EXTEND CONDUITS AND WIRING TO NEW MCC FOR THE REMAINING EQUIPMENT OR COMPONENTS.
3. EXIST RTU(PLC), LIQ-5 OF TESCO. MODIFY THE RTU BY FURNISHING NECESSARY MODULES PER THE DWG E-204. CONSULT THE MFR AS NECESSARY.
4. WELL LEVEL (DEPTH) TRANSDUCER LOCATED AT BUTTOM OF THE WELL. SUBMERCIBLE PRESSURE TRANSDUCER BY KPSI W/ CABLE AND CABLE HANGER. (BY OTHERS)
5. EXTEND CONDUITS AND WIRING OF EXIST LIGHT FIXTURES, RECEPTACLE OUTLETS, FANS, SWITCHES TO NEW MCC.
6. PROVIDE SURFACE PWR RECEPTACLE OUTLET, 125V, 20AMP, NEMA 5-20R IN CAST ALUM BOX SST COVERPLATE. TYP OF 2 EA.
7. LIGHT FIXTURE, PENDANT, GENERAL PURPOSE, INDUSTRIAL, (4)-32W TUBES, 10% HARMONIC ELECTRONIC BALLAST, EJ232-120GEB10 BY LITHONIA. TYP 6 EA.

### SPECIAL NOTE

ALL THE ELECTRICAL DRAWINGS ARE SCHEMATIC. CONDUITS OR WIRINGS ARE NOT SHOWN FOR SOME EQUIPMENT/DEVICES. IT SHALL BE CONTRACTOR'S RESPONSIBILITY TO COMPLETE THE PROJECT CONSTRUCTION PER DRAWINGS AND SPEC AT HIS DISCRETION AT NO ADDITIONAL COST TO THE CITY. FOR ANY DESCREPACIES, CONTRACTOR SHALL SUBMIT REQUESTS FOR CLARIFICATION DURING BIDDING PHASE.

E-202

| REVISION | | |
|---|---|---|
| NO. | DESCRIPTION | DATE |
| | | |
| | | |
| | | |
| | | |

REGISTERED PROFESSIONAL ENGINEER CHAE YOUNG LEE No E 12266 EXP. SEP. 30 2010 ELECTRICAL

APPROVED BY:
CHAE YOUNG LEE 12266 EE 3/2/09 DATE
APPROVED: DATE
APPROVED: DATE

PLANS PREPARED BY:
CIVILTEC engineering inc.
*General Civil, Municipal, Water and Wastewater Engineering, Planning, Construction Management and Surveying*
118 West Lime Avenue
Monrovia, Ca. 91016
Phone: (626) 357-0588
Fax: (626) 303-7957

Battelle
*The Business of Innovation*

CITY OF PASADENA INCORPORATED JUNE 1886

D.S.-209 & 210A

| DATE | SCALE | PASADENA WATER & POWER CITY OF PASADENA | SHEET NO 66 OF 79 SHEETS |
|---|---|---|---|
| NOVEMBER 2008 | AS SHOWN | | |
| DRAWN BY CALPOWER | | WELL 52 SITE PLAN AND BUILDING PLAN ELECTRICAL | WORK ORDER 02557 / FILE NUMBER E-1670 |
| DESIGNED BY CALPOWER | | | |
| CHECKED BY CIVILTEC | | | |
| SUBMITTED BY CIVILTEC | | | |
| FIELD BOOKS | CALC BOOKS | APPROVED / APPROVED | REVISION |

H:\02557\02740-GE MONROVIA TRESTAVOIR PLANT\DWGS\SUBMITTALS\FINAL SUBMITTAL\E-202.DWG (02-27-09 4:29:18PM)

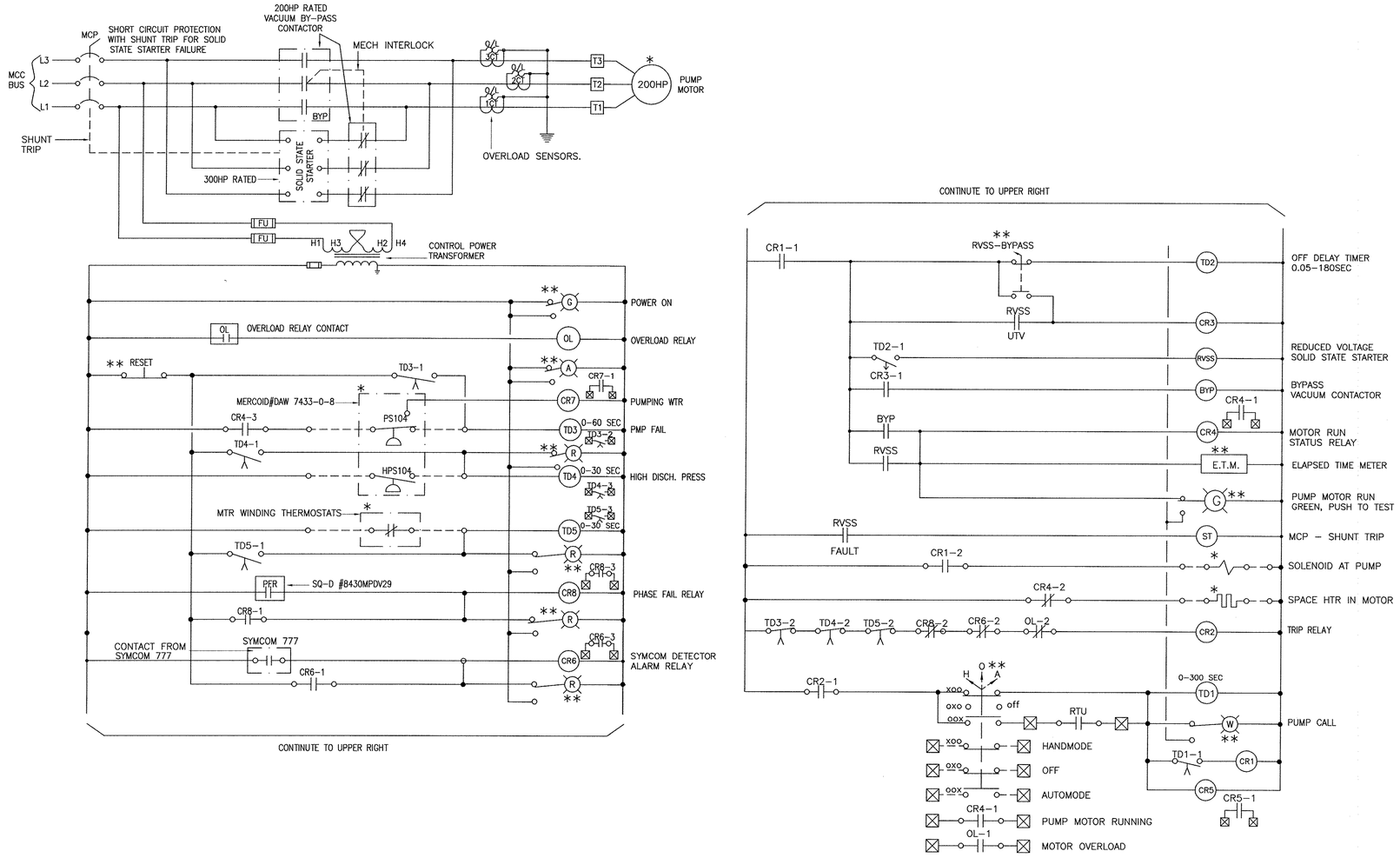


# WELL 52 PUMP MOTOR

* : DEVICE AT FIELD AND FIELD WIRING (BY THE EQUIPMENT INSTALLATION CONTRACTOR)

**: DEVICE AT FRONT SURFACE OF MCC.

⊠ : TERMINAL IN THE TELEMETRY SECTION FOR RTU INTERFACE.
PROVIDE THE TERMINAL NUMBERS IN THE SHOP DWG FOR AN APPROVAL.
CONTRACTOR SHALL CONSULT THE CITY FOR ADDITIONAL I/O OTHER THAN THE SHOWN ON THIS SCHEMATIC. PROVIDE SPARE TERMINALS (50EA) IN ADDITION TO THE TERMINALS SHOWN. TERMINALS SHALL BE ARRANGED ON ONE SIDE OF THE BACK PANEL IN THE TELEMETRY SECTION NOT TO INTERFERE WITH THE RTU EQUIPMENT INSTALLATION.

## SPECIAL NOTES

THIS DIAGRAM IS PREPARED FOR THE CONTROL REFERENCE ONLY. THE CONTRACTOR SHALL BE RESPONSIBLE FOR PREPARATION OF THE FINAL DIAGRAM AND SUBMITTING THE DIAGRAM AS A PART OF THE SHOP DRAWING SUBMITTAL BASED ON THE CITY AND THE PUMP SYSTEM MFR'S RQMTS AND THE DEVICES MFR'S INSTRUCTIONS, PRIOR TO ANY ACTIVITIES.

E-203

| REVISION | | |
|---|---|---|
| NO. | DESCRIPTION | DATE |
| | | |
| | | |
| | | |
| | | |

REGISTERED PROFESSIONAL ENGINEER CHAE YOUNG LEE No. E 12266 EXP. Sept. 30, 2010 ELECTRICAL STATE OF CALIFORNIA

APPROVED BY: CHAE YOUNG LEE 12266 EE — DATE 3/3/09
APPROVED: — DATE
APPROVED: — DATE

PLANS PREPARED BY:
CIVILTEC engineering inc.
*General Civil, Municipal, Water and Wastewater Engineering, Planning, Construction Management and Surveying*
118 West Lime Avenue
Monrovia, Ca. 91016
Phone: (626) 357-0588
Fax: (626) 303-7957

Battelle
*The Business of Innovation*

CITY OF PASADENA INCORPORATED JUNE 1886

D.S.-209 & 210A

| | | | |
|---|---|---|---|
| DATE NOVEMBER 2008 | SCALE AS SHOWN | PASADENA WATER & POWER CITY OF PASADENA | SHEET NO 67 OF 79 SHEETS |
| DRAWN BY CALPOWER; DESIGNED BY CALPOWER; CHECKED BY CIVILTEC; SUBMITTED BY CIVILTEC | | WELL 52 WELL PUMP CONTROL SCHEMATIC | WORK ORDER 02557 / FILE NUMBER E-1670 |
| FIELD BOOKS | CALC BOOKS | APPROVED / APPROVED | REVISION |

X:\2007\27140-JR MONWELL TREATMENT PLANT\DWG\SUBMITTALS\FINAL SUBMITTAL\E-203.DWG (02-27-09 9:59:56AM)

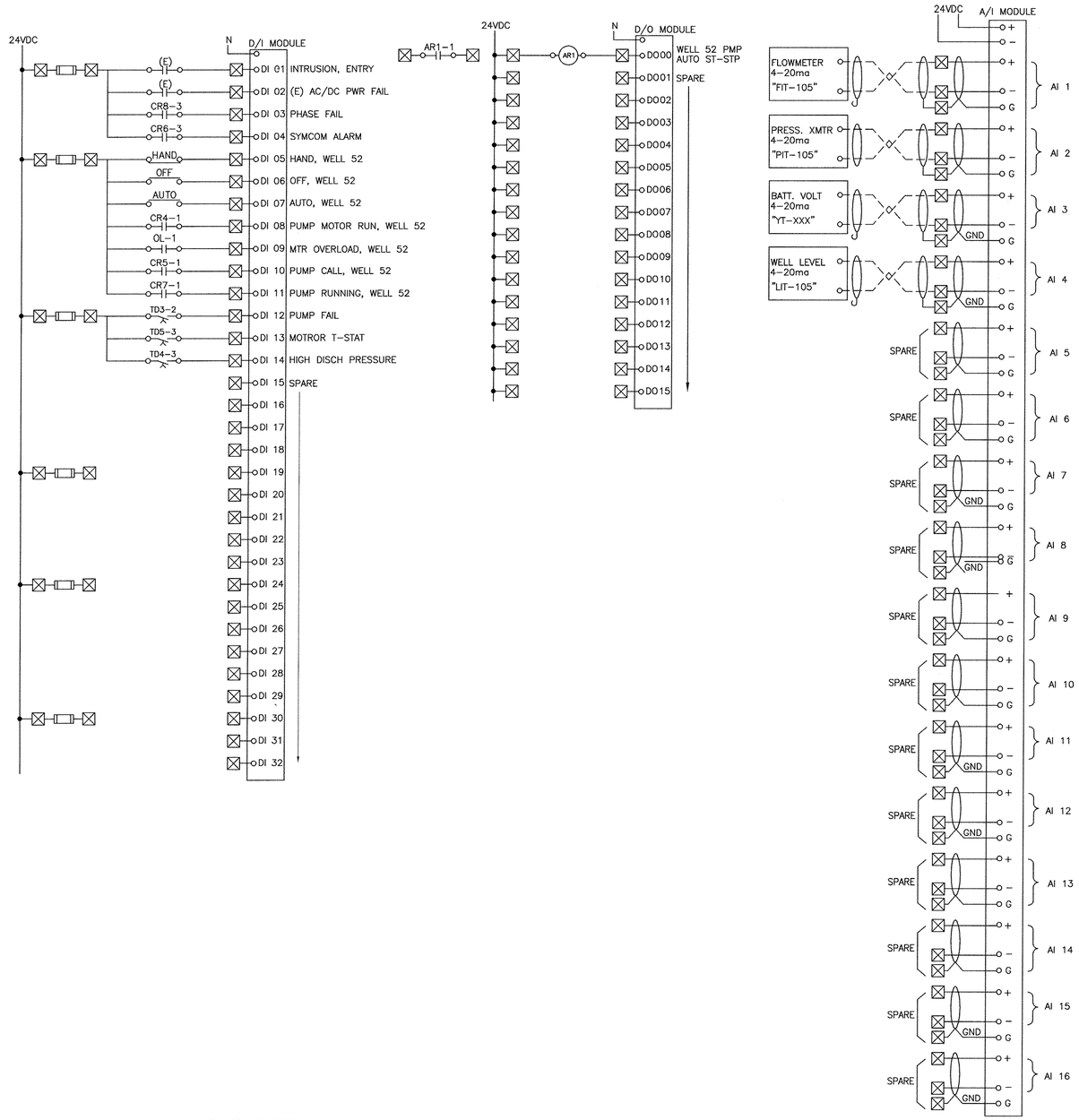


## NOTES FOR RTU(PLC) SYSTEM

1. MODIFY EXIST RTU BY PROVIDING NECESSARY MODULES AND ACCESSORIES TO ACCOMMODATE I/O'S AS SHOWN.
2. RTU AND SCADA SYSTEM PROGRAMMING BY THE CITY.

## SYMBOLS

(SEE DWG E-001 FOR OTHER SYMBOLS)

- ☒ TERMINAL FOR RTU(PLC) CONNECTION
- — — FIELD WIRING (BY CONTRACTOR OR RESPONSIBLE VENDOR)
- ▭ FUSE AT TERMINAL BLOCK

## WELL 52

E-204

| REVISION | | |
|---|---|---|
| NO. | DESCRIPTION | DATE |
| | | |
| | | |
| | | |
| | | |

REGISTERED PROFESSIONAL ENGINEER CHAE YOUNG LEE No E 12266 EXP. Sep. 30, 2010 ELECTRICAL STATE OF CALIFORNIA

APPROVED BY:
CHAE YOUNG LEE 12266 EE 3/2/09 DATE
APPROVED: DATE
APPROVED: DATE

PLANS PREPARED BY:
CIVILTEC engineering inc.
*General Civil, Municipal, Water and Wastewater Engineering, Planning, Construction Management and Surveying*
118 West Lime Avenue
Monrovia, Ca. 91016
Phone: (626) 357-0588
Fax: (626) 303-7957

Battelle
*The Business of Innovation*

CITY OF PASADENA INCORPORATED JUNE 1886

D.S.-209 & 210A

| DATE | SCALE | PASADENA WATER & POWER CITY OF PASADENA | SHEET NO 68 OF 79 SHEETS |
|---|---|---|---|
| NOVEMBER 2008 | AS SHOWN | | |
| DRAWN BY CALPOWER | | WELL 52 PLC INPUT/OUTPUT DIAGRAM | WORK ORDER 02557 / FILE NUMBER E-1670 |
| DESIGNED BY CALPOWER | | | |
| CHECKED BY CIVILTEC | | | |
| SUBMITTED BY CIVILTEC | | | |
| FIELD BOOKS | CALC BOOKS | APPROVED / APPROVED | REVISION |

X:\2007\07145-PA MONWALL TREATMENT PLANT\DWG\SUBMITTALS\FINAL SUBMITTAL\E-204.DWG (02-27-09 10:00:34AM)

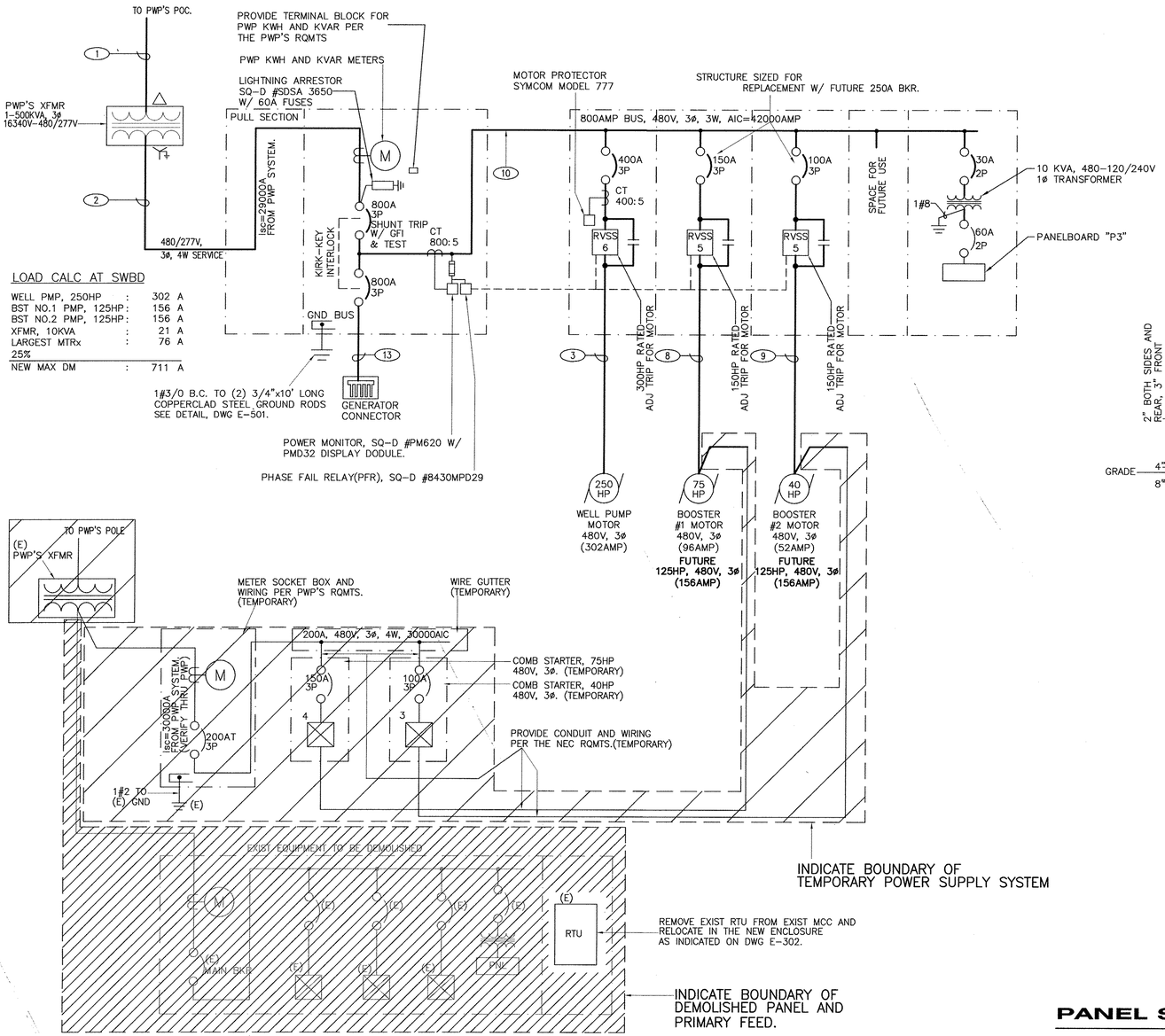


## LOAD CALC AT SWBD

| | | |
|---|---|---|
| WELL PMP, 250HP | : | 302 A |
| BST NO.1 PMP, 125HP | : | 156 A |
| BST NO.2 PMP, 125HP | : | 156 A |
| XFMR, 10KVA | : | 21 A |
| LARGEST MTRx | : | 76 A |
| 25% | | |
| NEW MAX DM | : | 711 A |




## CONSTRUCTION SEQUENCE

1. PROVIDE TEMPORARY POWER SUPPLY SYSTEM AND COMPONENTS FOR THE BOOSTER PUMPS AS INDICATED ON THE DIAGRAM.
2. DEMOLISH EXIST ELECTRICAL EQUIPMENT AND COMPONENTS AS INDICATED ON THE DRAWINGS.
3. PROVIDE PERMANENT POWER DISTRIBUTION SYSTEM AND COMPONENTS AS INDICATED ON THE DIAGRAM.
4. PWP TO DEMOLISH EXISTING PWP TRANSFORMER ENCLOSURE. 1
5. DOWNTIME OF THE BOOSTER PUMPS SHALL NOT BE PERMITTED DURING THE CONSTRUCTION.

ALL CIRCUIT BREAKERS SHALL BE 100% RATED TYPE, IF AVAILABLE.

## SINGLE LINE DIAGRAM

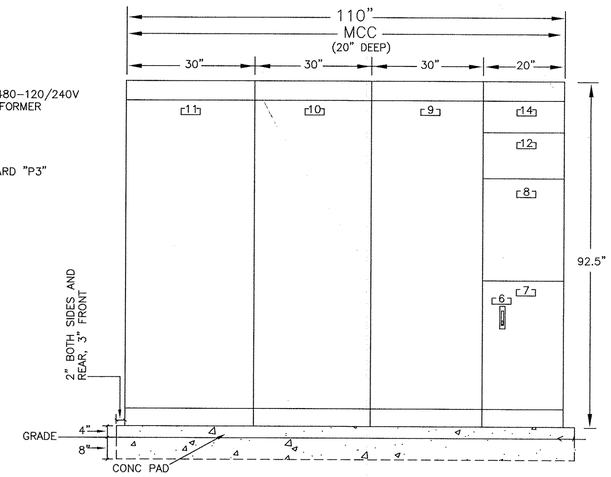


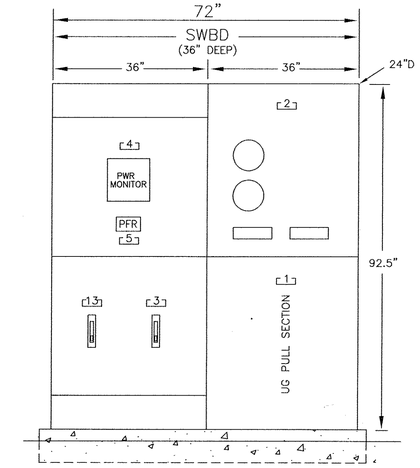


## SWBD AND MCC ELEVATION

NO SCALE

## CONSTRUCTION NOTES FOR SWBD AND MCC

(SEE DWG E-1 FOR OTHER NOTES.)

1. APPROXIMATE DIMENSIONS ARE SHOWN FOR REFERENCE ONLY. VERIFY THE DIMENSIONS THROUGH THE EQUIPMENT MFRS.
2. SWBD SHALL BE NEMA 1 TYPE CONSTRUCTION. MCC SHALL BE NEMA 12 TYPE CONSTRUCTION. WIRING NEMA CLASS IIS, TYPE B
3. SWBD BUS VOLTAGE SHALL BE 3ø, 4W HERTZ 60HZ MCC BUS VOLTAGE SHALL BE 3ø, 3W HERTZ 60HZ
4. GROUND BUS 1/4" X 1" TIN PLATED COPPER(TPC)
5. MCC BUS RATING. VERT. 300A HORIZ. 600A TPC
6. BUS BRACING AND BKR RATINGS AT MIN. 42,000 RMS SYM. AMP.
7. INDIVIDUAL 480/120V CTRL PWR XFMR FOR EACH STARTER
8. INCLUDE SURGE PROTECTOR AT EACH MOTOR STARTER.
9. CKT BKR TYPE MCP FOR EACH STARTER, THERMAL MAGNETIC TYPE BKR FOR EACH FEEDER BKR'S.
10. PROVIDE NAMEPLATE FOR EACH COMPARTMENT.
11. OVERLOAD HEATER ELEMENTS FOR EACH STARTER.
12. ANSI #61 FINISH.
13. ALL CONTROL/SIGNAL CONDUCTORS SHALL BE ENCLOSED IN PVC WIRE DUCTS W/ COVER.
14. SWBD AND MCC SHALL BE ANCHORED TO MEET SEISMIC ZONE 4 RQMTS. SUBMIT THE REGISTERED STRUCTURAL ENGINEER'S CALC. AS THE PART OF THE SHOP DRAWING SUBMITTAL, FOR AN APPROVAL..
16. SITE AMBIENT TEMP IS 125°F, HUMIDITY IS 20 TO 95%, ELEVATION IS ABOUT 2000 FT.
17. SQ-D MODEL 6, OR APPROVED EQUAL.
18. UG PULL SECTION & UTILITY METER SECTION SHALL MEET EUSERC RQMTS.

## NAMEPLATE SCHEDULE

- [1] UNDERGROUND PULL SECTION
- [2] UTILITY METER SECTION
- [3] MAIN BREAKER, 800AT
- [4] DIGITAL POWER METER
- [5] PHASE FAILURE RELAY
- [6] 30A/2P XFMR PRI BKR
- [7] 10KVA XFMR, 480-240/120V, 1ø, 3W
- [8] PNL "P", 240/120V, 1ø, 3W
- [9] ARROYO WELL PUMP STARTER
- [10] BST NO.1 STARTER
- [11] BST NO.2 STARTER
- [12] CONTROL RELAYS
- [13] STANDBY PWR BKR, 800AT
- [14] SPACE FOR FUTURE USE

## PANEL SCHEDULE

120/240 VOLTS 1 ø 3 W — PANELBOARD P — FEED TOP
60A MAIN — LOCATION M.C.C. — MTG. INSIDE MCC

| LOAD DESCRIPTIONS | WATTAGE ø A | WATTAGE ø B | LTG | RECC | MISS | CIR | BKR | A | B | BKR | CIR | MISS | RECC | LTG | WATTAGE ø A | WATTAGE ø B | LOAD DESCRIPTIONS |
|---|---|---|---|---|---|---|---|---|---|---|---|---|---|---|---|---|---|
| (E) EXT. LIGHTS | 1000 | | | | 1 | 1 | 20 | | | 20 | 2 | 1 | | | 500 | | SPARE |
| INT. LIGHTS | | 700 | 7 | | | 3 | 20 | | | 20 | 4 | | 5 | | | 900 | RECEPT. |
| SPACE | | | | | 1 | 5 | | | | 20 | 6 | 1 | | | 120 | | (E) RTU |
| | | | | | | 7 | | | | | 8 | | | | | | SPACE |
| | | | | | | 9 | | | | | 10 | | | | | | |
| | | | | | | 11 | | | | | 12 | | | | | | |
| | 1000 | 700 | | | | TOTAL | | | | TOTAL | | | | | 620 | 900 | |
| | PHASE TOTAL | | TOTAL LOAD | | | | | | | | | | | | | | |
| | 1620 | 1600 | 3.2KVA (13.4AMP) | | | | | | | | | | | | | | |

E-301

| REVISION | | |
|---|---|---|
| NO. | DESCRIPTION | DATE |
| 1 | BUILDING DEPARTMENT PLAN CHECK COMMENTS | 01/05/09 |

REGISTERED PROFESSIONAL ENGINEER — CHAE YOUNG LEE — No E 12266 — EXP. SEPT. 30, 2010 — ELECTRICAL — STATE OF CALIFORNIA

APPROVED BY: CHAE YOUNG LEE 12266 EE — DATE 3/2/09
APPROVED: — DATE
APPROVED: — DATE

PLANS PREPARED BY:
CIVILTEC engineering inc.
*General Civil, Municipal, Water and Wastewater Engineering, Planning, Construction Management and Surveying*
118 West Lime Avenue
Monrovia, Ca. 91016
Phone: (626) 357-0588
Fax: (626) 303-7957

Battelle — The Business of Innovation

CITY OF PASADENA — INCORPORATED JUNE 1886

D.S.-209 & 210A

| DATE | SCALE | PASADENA WATER & POWER CITY OF PASADENA | SHEET NO 69 OF 79 SHEETS |
|---|---|---|---|
| NOVEMBER 2008 | AS SHOWN | ARROYO WELL SINGLE LINE DIAGRAM, ELEVATION, SCHEDULE | WORK ORDER 02557 / FILE NUMBER E-1670 |

DRAWN BY CALPOWER — DESIGNED BY CALPOWER — CHECKED BY CIVILTEC — SUBMITTED BY CIVILTEC
FIELD BOOKS — CALC BOOKS — APPROVED — APPROVED — REVISION

X:\2007\27140-JR MONROVIA TREATMENT PLANT\DWG\SUBMITTAL\FINAL SUBMITTAL\E-301.DWG (02-27-09 10:01:52AM)

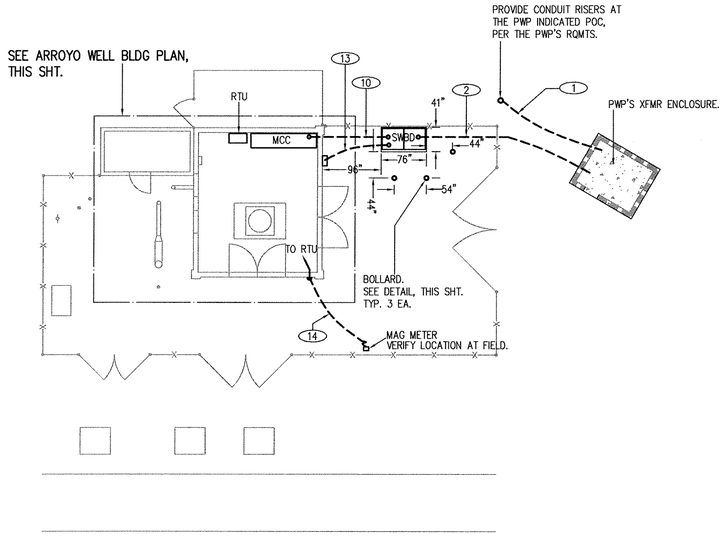


## ARROYO WELL SITE PLAN – ELECTRICAL

NOT TO SCALE

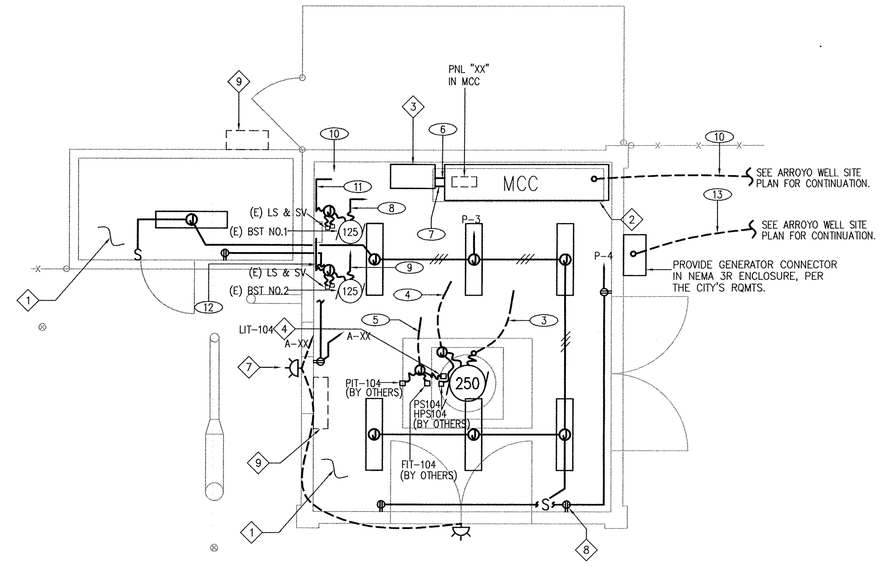


## ARROYO WELL BLDG PLAN – ELECTRICAL

SCALE: 1/4"=1'-0"

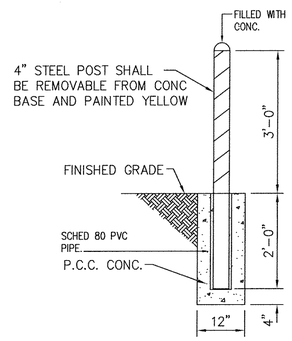


## BARRIER POST

N.T.S.

## FEEDER SCHEDULE (X)

1. (2)4"C, FROM PWP'S POC TO PWP XFMR ENCLOSURE, PROVIDED PER THE PWP'S RQMTS.
2. (3) 5"C, FROM PWP XFMR ENCLOSURE TO SWBD, PROVIDED PER THE PWP'S RQMTS.
3. 3"C–2(3#250MCM),+1#3GND. FROM MCC TO WELL PUMP MOTOR.
4. 3/4"C–12#14+1#14GND. FROM MCC TO "PS/HPS", "T–STAT", "SOLENOID", "SPC HTR, AT FIELD. (CONTROL)
5. 1"C–XDCR & XMTR CABLE, FROM "LIT101", "PIT101", "FIT102" TO RTU. PROVIDE THE XDCR & XMTR CABLES PER THE EQUIPMENT MFR'S INSTRUCTIONS. (SIGNAL)
6. 3/4"C–12#14+1#14GND. FROM MCC TO "PS/HPS", "T–STAT", "SOLENOID", "SPC HTR, AT FIELD. (CONTROL)
7. 1"C–XDCR & XMTR CABLE, FROM "LIT101", "PIT101", "FIT102" TO RTU. PROVIDE THE XDCR & XMTR CABLES PER THE EQUIPMENT MFR'S INSTRUCTIONS. (SIGNAL)
8. 2"C–3#3/0+1#4GND), FROM MCC TO (E) BST PMP NO.1.
9. 2"C–3#3/0+1#4GND), FROM MCC TO (E) BST PMP NO.2.
10. 2(3"C–3#350MCM+1#1GND), FROM SWBD TO MCC.
11. 3/4"C–10#14+1#14GND. FROM MCC TO (E) "LS", "SV", "T–STAT", "SPC HTR, AT (E) BST NO.1. (CONTROL)
12. 3/4"C–10#14+1#14GND. FROM MCC TO (E) "LS", "SV", "T–STAT", "SPC HTR, AT (E) BST NO.2. (CONTROL)
13. 2(3"C–3#500MCM+1#1/0GND). FROM MCC TO GEN CONNECTOR.
14. 3/4"C–W/ SIGNAL CABLE PER THE MFR'S SPEC, FROM MAG METER TO RTU.

## CONSTRUCTION NOTES

1. REMOVE UNUSED ELECTRICAL EQUIPMENT AND COMPONENTS IN THE ROOM COMPLETELY. ALL THE REMAINING EQUIPMENT OR COMPONENTS ARE NOT NECESSARILY SHOWN.
2. REMOVE EXIST MCC AND RELATED CONDUITS AND WIRING COMPLETELY. MODIFY/EXTEND CONDUITS AND WIRING TO NEW MCC FOR THE REMAINING EQUIPMENT OR COMPONENTS.
3. PROVIDE 30"x30"x12"D NEMA 12 ENCL BY HOFFMAN (MFR). ASSEMBLE RTU BY RELOCATING EXIST RTU(PLC) LIQ–5 OF TESCO TO MATCH EXIST RTU IN OTHER WELLS. MODIFY THE RTU BY FURNISHING NECESSARY MODULE PER THE DWG E–306. CONSULT THE MFR AS NECESSARY.
4. WELL LEVEL (DEPTH) TRANSDUCER LOCATED AT BUTTOM OF THE WELL. SUBMERCIBLE PRESSURE TRANSDUCER BY KPSI W/ CABLE AND CABLE HANGER.
5. LIGHT FIXTURE, PENDANT, GENERAL PURPOSE, INDUSTRIAL, (4)–32W TUBES, 10% HARMONIC ELECTRONIC BALLAST, EJ432–120GEB10 BY LITHONIA. TYP 5 EA.
6. PROVIDE UNDERGROUND PULLBOX, 10"X17"X36"D, 3 1/2(T) PB BY BROOKS.
7. 70W HIGH PRESSURE SODIUM LAMP W/ INTERNAL REFLECTOR, PRISMATIC POLYCARBONATED REFRACTOR, BUILT–IN 0–20FC ADJ PHOTOCELL CONTROL, UL APPROVED FOR WET LOCATION. HUBBELL #NRG–307 OR APPROVED EQUAL. TYP. 2 EA.
8. PROVIDE SURFACE PWR RECEPTACLE OUTLET, 125V, 20AMP, NEMA 5–20R IN CAST ALUM BOX SST COVERPLATE. TYP OF 2 EA.
9. PROVIDE TEMPORARY PWR EQUIPMENT, CONDUIT AND WIRING. PROVIDE SERVICE EQUIPMENT AND CONDUIT TO MEET THE PWP'S RQMTS.

### SPECIAL NOTE

1. ALL THE ELECTRICAL DRAWINGS ARE SCHEMATIC. CONDUITS OR WIRINGS ARE NOT SHOWN FOR SOME EQUIPMENT/DEVICES. IT SHALL BE CONTRACTOR'S RESPONSIBILITY TO COMPLETE THE PROJECT CONSTRUCTION PER DRAWINGS AND SPEC AT HIS DISCRETION AT NO ADDITIONAL COST TO THE CITY. FOR ANY DESCREPACIES, CONTRACTOR SHALL SUBMIT REQUESTS FOR CLARIFICATION DURING BIDDING PHASE.
2. CONTRACTOR MUST WORK CLOSELY WITH PWP IN COORDINATING ELECTRICAL WORK DUE TO ENERGIZED SYSTEM.
3. PROVIDE A STANDBY POWER GENERATOR FOR CONTINUOUS OPERATION OF THE BOOSTER PUMPS.

E–302

| REVISION | | |
|---|---|---|
| NO. | DESCRIPTION | DATE |
| | | |
| | | |
| | | |
| | | |

REGISTERED PROFESSIONAL ENGINEER CHAE YOUNG LEE No E 12266 EXP Sep 30 2010 ELECTRICAL STATE OF CALIFORNIA

APPROVED BY: CHAE YOUNG LEE 12266 EE — DATE 3/2/09
APPROVED: — DATE
APPROVED: — DATE

PLANS PREPARED BY:
CIVILTEC engineering inc.
*General Civil, Municipal, Water and Wastewater Engineering, Planning, Construction Management and Surveying*
118 West Lime Avenue
Monrovia, Ca. 91016
Phone: (626) 357-0588
Fax: (626) 303-7957

Battelle
*The Business of Innovation*

CITY OF PASADENA INCORPORATED JUNE 1886

D.S.–209 & 210A

| DATE | SCALE | PASADENA WATER & POWER CITY OF PASADENA | SHEET NO 70 OF 79 SHEETS |
|---|---|---|---|
| NOVEMBER 2008 | AS SHOWN | ARROYO WELL SITE PLAN AND BUILDING PLAN ELECTRICAL | WORK ORDER 02557 / FILE NUMBER E–1670 |

DRAWN BY CALPOWER
DESIGNED BY CALPOWER
CHECKED BY CIVILTEC
SUBMITTED BY CIVILTEC
FIELD BOOKS | CALC BOOKS | APPROVED | APPROVED | REVISION

X:\2007\27140-PL MONWALL TREATMENT PLANT\DWG\SUBMITTALS\FINAL SUBMITTAL\E-302.DWG (02-27-09 10:02:14AM)

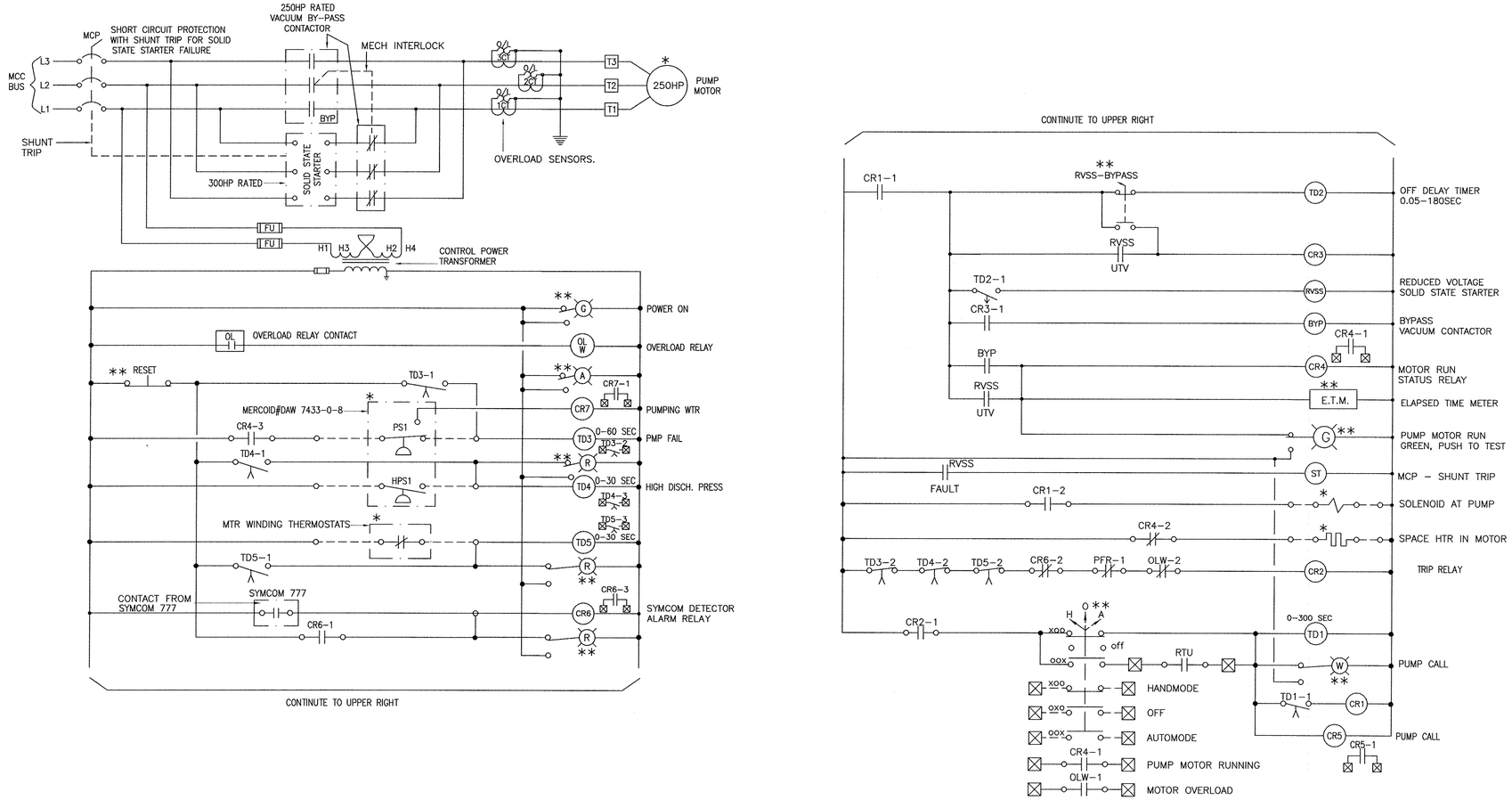


# ARROYO WELL PUMP MOTOR

* : DEVICE AT FIELD AND FIELD WIRING (BY THE EQUIPMENT INSTALLATION CONTRACTOR)

**: DEVICE AT FRONT SURFACE OF MCC.

⊠ : TERMINAL IN THE TELEMETRY SECTION FOR RTU INTERFACE. PROVIDE THE TERMINAL NUMBERS IN THE SHOP DWG FOR AN APPROVAL. CONTRACTOR SHALL CONSULT THE CITY FOR ADDITIONAL I/O OTHER THAN THE SHOWN ON THIS SCHEMATIC. PROVIDE SPARE TERMINALS (50EA) IN ADDITION TO THE TERMINALS SHOWN. TERMINALS SHALL BE ARRANGED ON ONE SIDE OF THE BACK PANEL IN THE TELEMETRY SECTION NOT TO INTERFERE WITH THE RTU EQUIPMENT INSTALLATION.

## SPECIAL NOTES

THIS DIAGRAM IS PREPARED FOR THE CONTROL REFERENCE ONLY. THE CONTRACTOR SHALL BE RESPONSIBLE FOR PREPARATION OF THE FINAL DIAGRAM AND SUBMITTING THE DIAGRAM AS A PART OF THE SHOP DRAWING SUBMITTAL BASED ON THE CITY AND THE PUMP SYSTEM MFR'S RQMTS AND THE DEVICES MFR'S INSTRUCTIONS, PRIOR TO ANY ACTIVITIES.

E-303

| REVISION | | |
|---|---|---|
| NO. | DESCRIPTION | DATE |
| | | |
| | | |
| | | |
| | | |

REGISTERED PROFESSIONAL ENGINEER CHAE YOUNG LEE No E 12266 EXP. 10-30-2010 ELECTRICAL STATE OF CALIFORNIA

APPROVED BY:
CHAE YOUNG LEE 12266 EE — DATE 3/2/09
APPROVED: — DATE
APPROVED: — DATE

PLANS PREPARED BY:
CIVILTEC engineering inc.
*General Civil, Municipal, Water and Wastewater Engineering, Planning, Construction Management and Surveying*
118 West Lime Avenue
Monrovia, Ca. 91016
Phone: (626) 357-0588
Fax: (626) 303-7957

Battelle
*The Business of Innovation*

CITY OF PASADENA INCORPORATED JUNE 1886

D.S.-209 & 210A

| | | | |
|---|---|---|---|
| DATE NOVEMBER 2008 | SCALE AS SHOWN | PASADENA WATER & POWER CITY OF PASADENA | SHEET NO 71 OF 79 SHEETS |
| DRAWN BY CALPOWER; DESIGNED BY CALPOWER; CHECKED BY CIVILTEC; SUBMITTED BY CIVILTEC | | ARROYO WELL PUMP CONTROL SCHEMATICS | WORK ORDER 02557 / FILE NUMBER E-1670 |
| FIELD BOOKS | CALC BOOKS | APPROVED / APPROVED | REVISION |

X:\2007\27140-JPL WORKWELL TREATMENT PLANT\DWG\SUBMITTALS\FINAL SUBMITTAL\E-303.DWG (02-27-09 10:02:42AM)

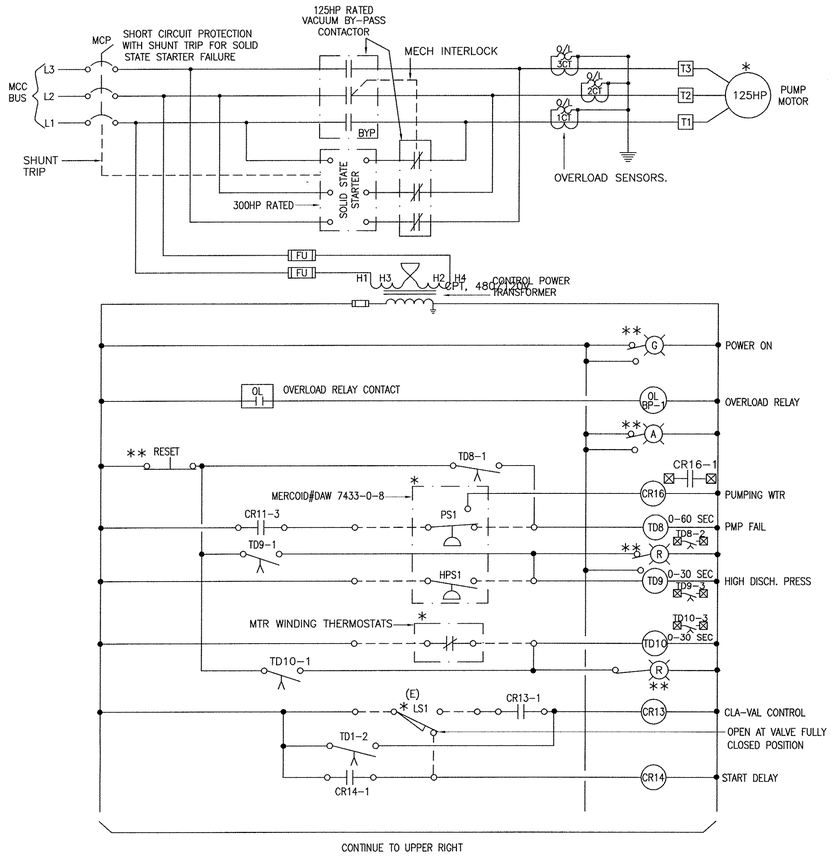


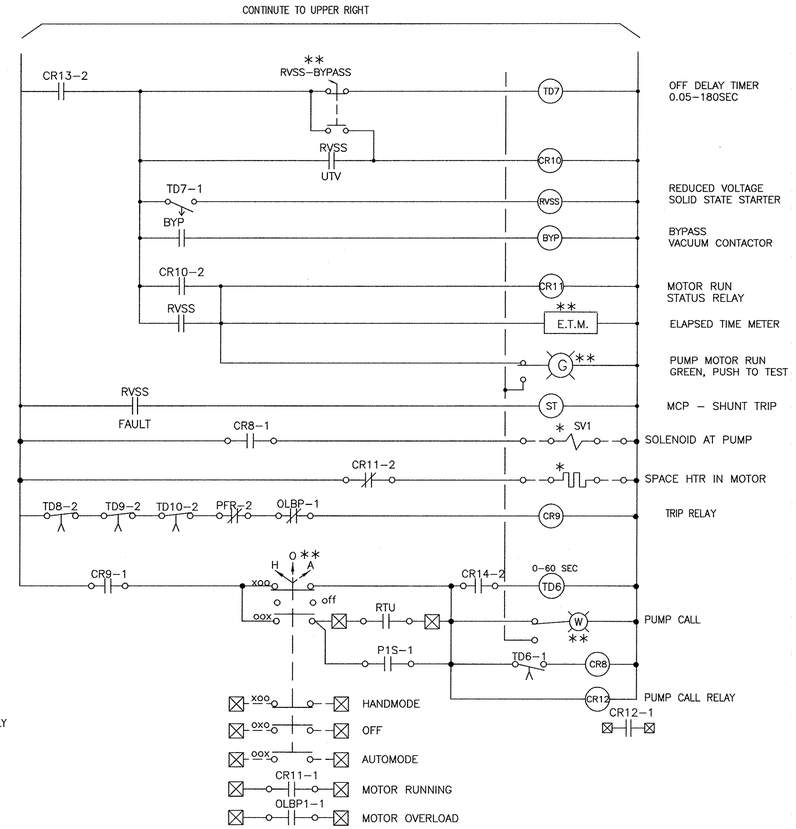


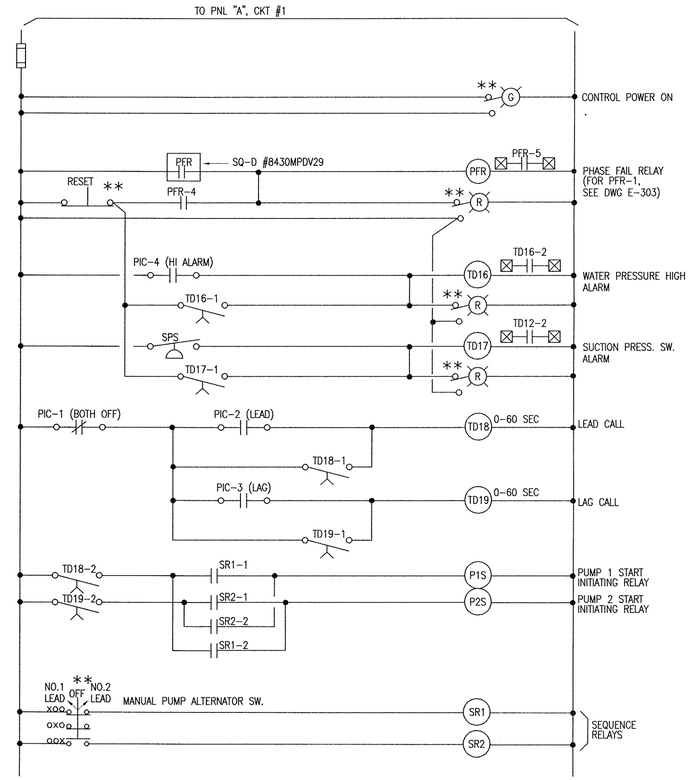


## MISCELLANEOUS CONTROL SCHEMATIC

## ARROYO BOOSTER PUMP MOTOR NO.1

TYPICAL FOR BOOSTER PUMP MOTOR NO.2 EXCEPT DEVICE NUMBERS VARY ACCORDINGLY.

### SPECIAL NOTES

THIS DIAGRAM IS PREPARED FOR THE CONTROL REFERENCE ONLY. THE CONTRACTOR SHALL BE RESPONSIBLE FOR PREPARATION OF THE FINAL DIAGRAM AND SUBMITTING THE DIAGRAM AS A PART OF THE SHOP DRAWING SUBMITTAL BASED ON THE CITY AND THE PUMP SYSTEM MFR'S RQMTS AND THE DEVICES MFR'S INSTRUCTIONS, PRIOR TO ANY ACTIVITIES.

* : DEVICE AT FIELD AND FIELD WIRING (BY THE EQUIPMENT INSTALLATION CONTRACTOR)

**: DEVICE AT FRONT SURFACE OF MCC.

⊠ : TERMINAL IN THE TELEMETRY SECTION FOR RTU INTERFACE. PROVIDE THE TERMINAL NUMBERS IN THE SHOP DWG FOR AN APPROVAL. CONTRACTOR SHALL CONSULT THE CITY FOR ADDITIONAL I/O OTHER THAN THE SHOWN ON THIS SCHEMATIC. PROVIDE SPARE TERMINALS (50EA) IN ADDITION TO THE TERMINALS SHOWN. TERMINALS SHALL BE ARRANGED ON ONE SIDE OF THE BACK PANEL IN THE TELEMETRY SECTION NOT TO INTERFERE WITH THE RTU EQUIPMENT INSTALLATION.

E-304

| REVISION | | |
|---|---|---|
| NO. | DESCRIPTION | DATE |
| | | |

REGISTERED PROFESSIONAL ENGINEER CHAE YOUNG LEE No E 12266 Exp. SEP.30, 2010 ELECTRICAL STATE OF CALIFORNIA

APPROVED BY: CHAE YOUNG LEE 12266 EE 2/2/09 DATE
APPROVED: DATE
APPROVED: DATE

PLANS PREPARED BY:
CIVILTEC engineering inc.
*General Civil, Municipal, Water and Wastewater Engineering, Planning, Construction Management and Surveying*
118 West Lime Avenue
Monrovia, Ca. 91016
Phone: (626) 357-0588
Fax: (626) 303-7957

Battelle
*The Business of Innovation*

CITY OF PASADENA INCORPORATED JUNE, 1886

D.S.-209 & 210A

| | | |
|---|---|---|
| DATE NOVEMBER 2008 | SCALE AS SHOWN | PASADENA WATER & POWER CITY OF PASADENA |
| DRAWN BY CALPOWER | | ARROYO BOOSTER PUMP CONTROL SCHEMATICS |
| DESIGNED BY CALPOWER | | |
| CHECKED BY CIVILTEC | | |
| SUBMITTED BY CIVILTEC | | |
| FIELD BOOKS | CALC BOOKS | APPROVED / APPROVED |

SHEET NO 72 OF 79 SHEETS
WORK ORDER 02557
FILE NUMBER E-1670
REVISION

X:\20071\27140-PL MOORWILL TREATMENT PLANT\DWG\SUBMITTALS\FINAL SUBMITTAL\E-304.DWG (02-27-09 10:03:15AM)

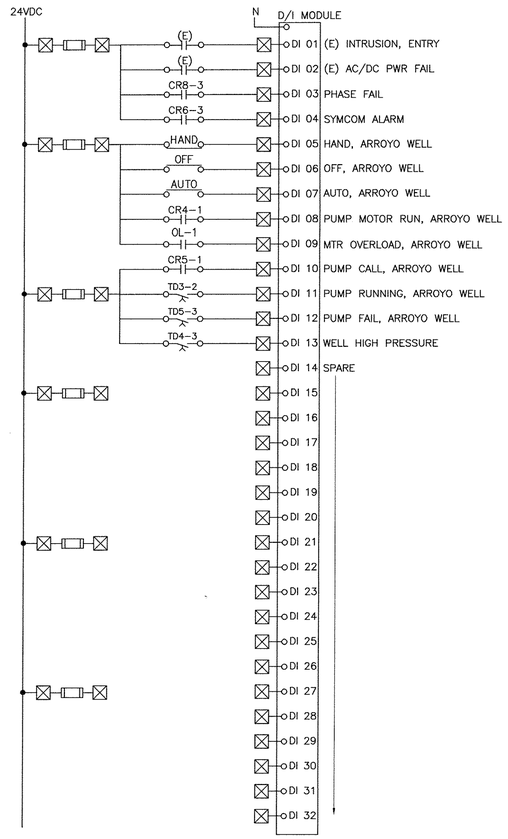


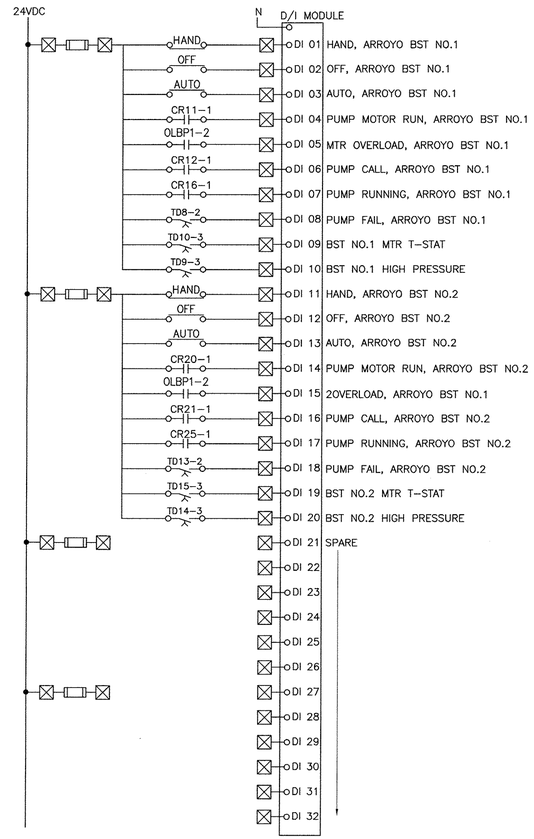


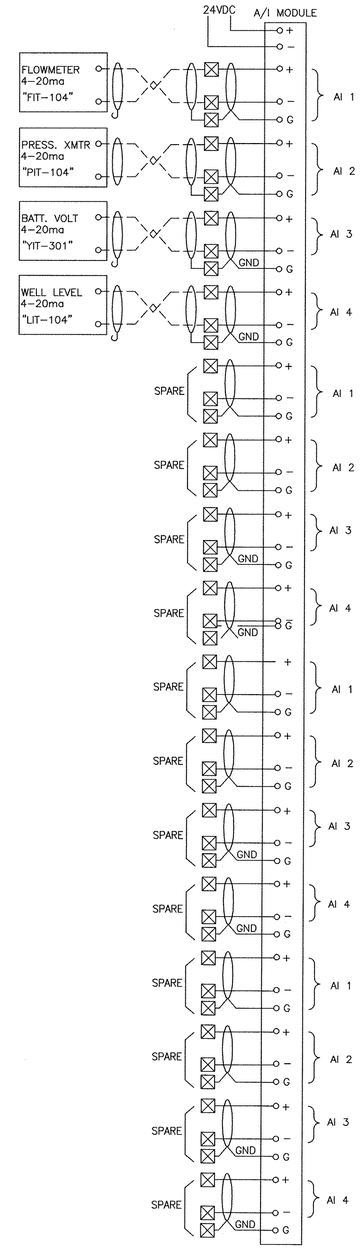


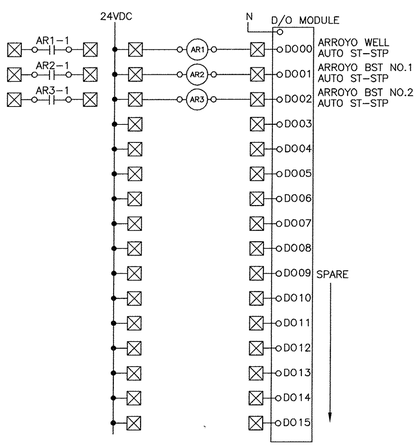


ARROYO WELL

## NOTES FOR RTU(PLC) SYSTEM

1. MODIFY EXIST RTU BY PROVIDING NECESSARY MODULES AND ACCESSORIES TO ACCOMMODATE I/O'S AS SHOWN.
2. RTU AND SCADA SYSTEM PROGRAMMING BY THE CITY.

## SYMBOLS

(SEE DWG E-001 FOR OTHER SYMBOLS)

- ☒ TERMINAL FOR RTU(PLC) CONNECTION
- — — FIELD WIRING (BY CONTRACTOR OR RESPONSIBLE VENDOR)
- ▭ FUSE AT TERMINAL BLOCK

E-305

| REVISION | | |
|---|---|---|
| NO. | DESCRIPTION | DATE |
| | | |
| | | |
| | | |
| | | |

REGISTERED PROFESSIONAL ENGINEER CHAE YOUNG LEE No E 12266 EXP. 12/31/2009 ELECTRICAL STATE OF CALIFORNIA

APPROVED BY:
CHAE YOUNG LEE 12266 EE — 3/2/09 DATE
APPROVED: — DATE
APPROVED: — DATE

PLANS PREPARED BY:
CIVILTEC engineering inc.
*General Civil, Municipal, Water and Wastewater Engineering, Planning, Construction Management and Surveying*
118 West Lime Avenue
Monrovia, Ca. 91016
Phone: (626) 357-0588
Fax: (626) 303-7957

Battelle
*The Business of Innovation*

CITY OF PASADENA INCORPORATED JUNE 1886

D.S.-209 & 210A

| DATE | SCALE | PASADENA WATER & POWER CITY OF PASADENA | SHEET NO 73 OF 79 SHEETS |
|---|---|---|---|
| NOVEMBER 2008 | AS SHOWN | | |
| DRAWN BY CALPOWER | | ARROYO PLC INPUT/OUTPUT DIAGRAM | WORK ORDER 02557 / FILE NUMBER E-1670 |
| DESIGNED BY CALPOWER | | | |
| CHECKED BY CIVILTEC | | | |
| SUBMITTED BY CIVILTEC | | | |
| FIELD BOOKS | CALC BOOKS | APPROVED / APPROVED | REVISION |

X:\2007\27-40-01_WORKALL TREATMENT PLANT\DWG\SUBMITTALS\FINAL SUBMITTAL\E-305.DWG (02-27-09 10:03:43AM)

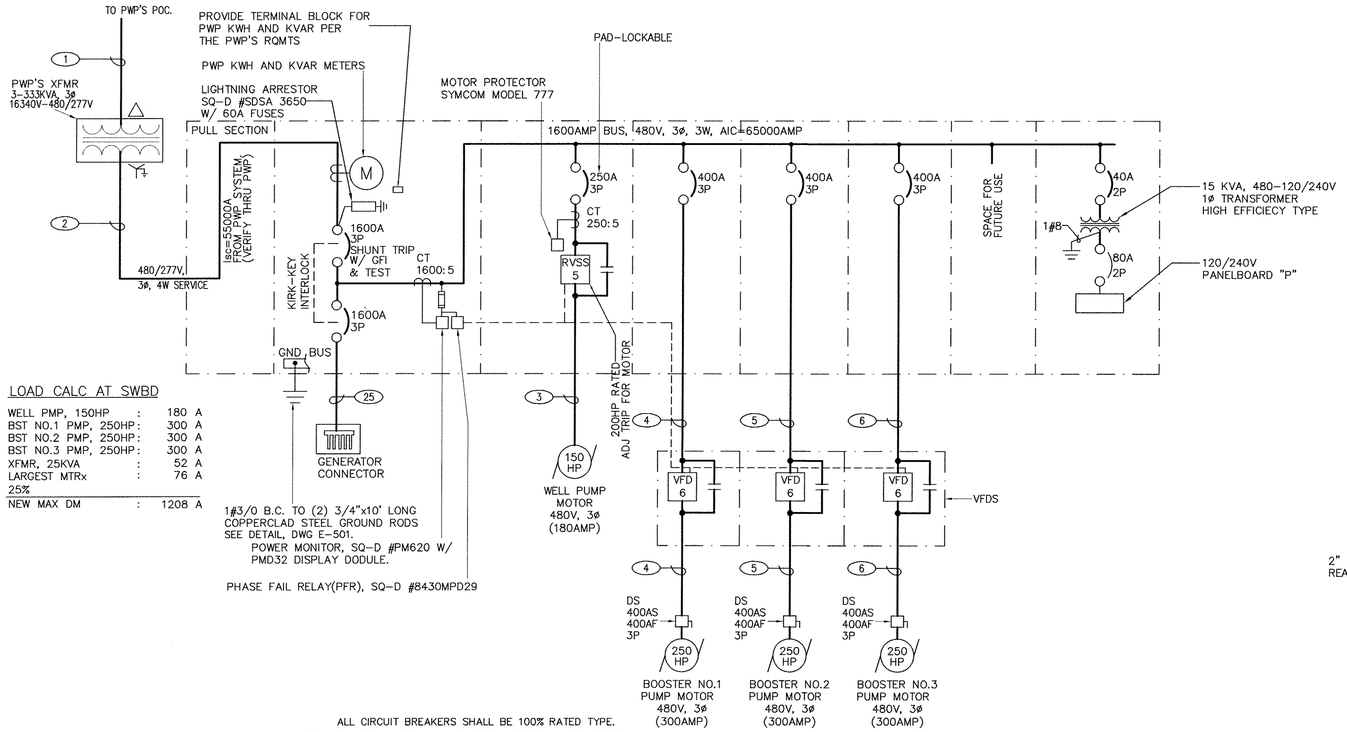


## LOAD CALC AT SWBD

| | | |
|---|---|---|
| WELL PMP, 150HP | : | 180 A |
| BST NO.1 PMP, 250HP | : | 300 A |
| BST NO.2 PMP, 250HP | : | 300 A |
| BST NO.3 PMP, 250HP | : | 300 A |
| XFMR, 25KVA | : | 52 A |
| LARGEST MTRx | : | 76 A |
| 25% | | |
| NEW MAX DM | : | 1208 A |

ALL CIRCUIT BREAKERS SHALL BE 100% RATED TYPE.

## SINGLE LINE DIAGRAM

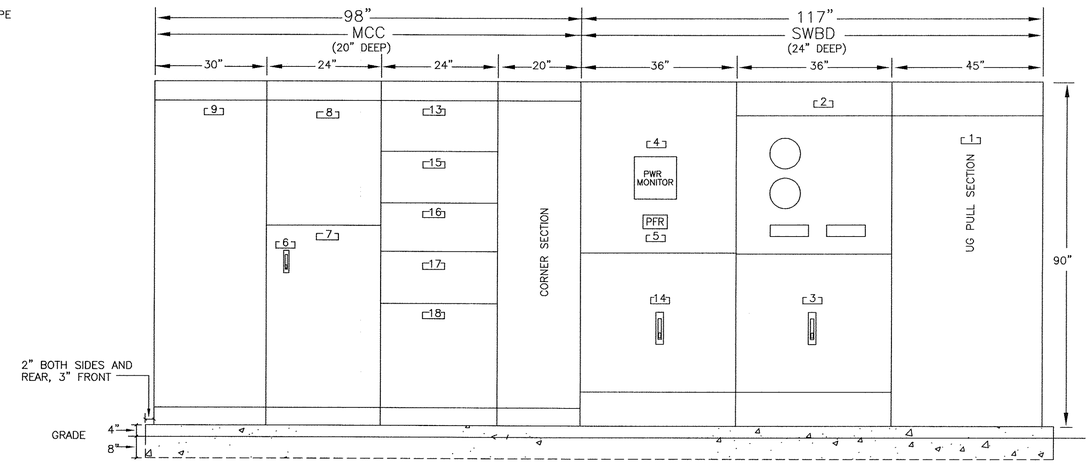


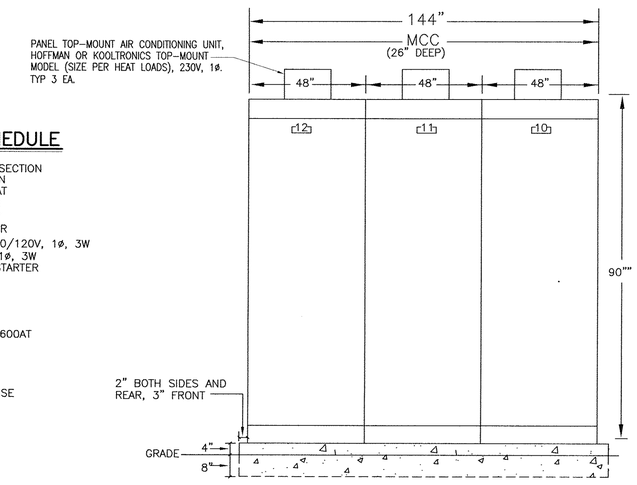


## SWBD AND MCC ELEVATION

NO SCALE

## PANEL SCHEDULE

120/240 VOLTS 1 ø 3 W PANELBOARD P FEED TOP
80A MAIN LOCATION M.C.C. MTG. INSIDE MCC

| LOAD DESCRIPTIONS | WATTAGE ø A | WATTAGE ø B | LTG | REC | MIS | CIR | BKR | A | B | BKR | CIR | MIS | REC | LTG | WATTAGE ø A | WATTAGE ø B | LOAD DESCRIPTIONS |
|---|---|---|---|---|---|---|---|---|---|---|---|---|---|---|---|---|---|
| (E) YARD. LIGHTS | 500 | | | | 1 | 1 | 20 | | | 20 | 2 | | 9 | | 1620 | | RECEPT |
| (E) INT. LIGHTS | | 1600 | 16 | | | 3 | 20 | | | 20 | 4 | 1 | | | | 600 | (E) FAN#1 |
| (E) RTU | 120 | | | | 1 | 5 | 20 | | | 20 | 6 | 1 | | | 600 | | (E) FAN#2 |
| A/C UNIT#3 | | 1100 | | | 1 | 7 | 20/ | | | 20 | 8 | 1 | | | | 600 | (E) FAN#3 |
| – | 1100 | | | | – | 9 | 2 | | | 20/ | 10 | 1 | | | 1100 | | A/C UNIT#1 |
| SPARE | | 500 | | | 1 | 11 | | | | 2 | 12 | – | | | | 1100 | – |
| SPACE | | | | | | 13 | | | | 20/ | 14 | 1 | | | 1100 | | A/C UNIT#2 |
| | | | | | | 15 | | | | 2 | 16 | – | | | | 1100 | – |
| | | | | | | 17 | | | | | 18 | | | | | | SPACE |
| | 1720 | 3200 | | | | TOTAL | | | | TOTAL | | | | | 4429 | 3400 | |
| | PHASE TOTAL | | TOTAL LOAD | | | | | | | | | | | | | | |
| | 6149 | 6600 | 12.8KVA (53AMP) | | | | | | | | | | | | | | |

## CONSTRUCTION NOTES FOR SWBD, MCC, AND VFDS

(SEE DWG E-1 FOR OTHER NOTES.)

1. APPROXIMATE DIMENSIONS ARE SHOWN FOR REFERENCE ONLY. VERIFY THE DIMENSIONS THROUGH THE EQUIPMENT MFRS.
2. SWBD SHALL BE NEMA 1 TYPE CONSTRUCTION. MCC/VFD SHALL BE NEMA 12 TYPE CONSTRUCTION. WIRING NEMA CLASS IIS, TYPE B
3. SWBD BUS VOLTAGE SHALL BE 3ø, 4W HERTZ 60HZ MCC BUS VOLTAGE SHALL BE 3ø, 3W HERTZ 60HZ
4. GROUND BUS 1/4" X 1" TIN PLATED COPPER(TPC)
5. MCC BUS RATING. VERT. 400A HORIZ. 1600A TPC
6. BUS BRACING AND BKR RATINGS AT MIN. 42,000 RMS SYM. AMP.
7. INDIVIDUAL 480/120V CTRL PWR XFMR FOR EACH STARTER
8. INCLUDE SURGE PROTECTOR AT EACH MOTOR STARTER.
9. CKT BKR TYPE MCP FOR EACH STARTER, THERMAL MAGNETIC TYPE BKR FOR EACH FEEDER BKR'S.
10. PROVIDE NAMEPLATE FOR EACH COMPARTMENT.
11. OVERLOAD HEATER ELEMENTS FOR EACH STARTER.
12. ANSI #61 FINISH.
13. ALL CONTROL/SIGNAL CONDUCTORS SHALL BE ENCLOSED IN PVC WIRE DUCTS W/ COVER.
14. SWBD AND MCC SHALL BE ANCHORED TO MEET SEISMIC ZONE 4 RQMTS. SUBMIT THE REGISTERED STRUCTURAL ENGINEER'S CALC. AS THE PART OF THE SHOP DRAWING SUBMITTAL, FOR AN APPROVAL..
16. SITE AMBIENT TEMP IS 125°F, HUMIDITY IS 20 TO 95%, ELEVATION IS ABOUT 2000 FT.
17. SQ-D MODEL 6, OR APPROVED EQUAL.
18. UG PULL SECTION & UTILITY METER SECTION SHALL MEET EUSERC RQMTS.

## NAMEPLATE SCHEDULE

- [1] UNDERGROUND PULL SECTION
- [2] UTILITY METER SECTION
- [3] MAIN BREAKER, 1600AT
- [4] DIGITAL POWER METER
- [5] PHASE FAILURE RELAY
- [6] 40A/2P XFMR PRI BKR
- [7] 15KVA XFMR, 480-240/120V, 1ø, 3W
- [8] PNL "P", 240/120V, 1ø, 3W
- [9] VENTURA WELL PMP STARTER
- [10] BST NO.1 VFD
- [11] BST NO.2 VFD
- [12] BST NO.3 VFD
- [13] CONTROL RELAYS
- [14] STANDBY PWR BKR, 1600AT
- [15] BST#1 BKR, 400AT
- [16] BST#2 BKR, 400AT
- [17] BST#3 BKR, 400AT
- [18] SPACE FOR FUTURE USE

| REVISION | | |
|---|---|---|
| NO. | DESCRIPTION | DATE |
| | | |

REGISTERED PROFESSIONAL ENGINEER CHAE YOUNG LEE No E 12266 EXP. SEP. 30, 2010 ELECTRICAL STATE OF CALIFORNIA

APPROVED BY: CHAE YOUNG LEE 12266 EE 3/2/09 DATE
APPROVED: DATE
APPROVED: DATE

PLANS PREPARED BY: CIVILTEC engineering inc.
*General Civil, Municipal, Water and Wastewater Engineering, Planning, Construction Management and Surveying*
118 West Lime Avenue
Monrovia, Ca. 91016
Phone: (626) 357-0588
Fax: (626) 303-7957

Battelle *The Business of Innovation*

CITY OF PASADENA INCORPORATED JUNE 1886

D.S.-209 & 210A

| DATE | SCALE | PASADENA WATER & POWER CITY OF PASADENA | SHEET NO 74 OF 79 SHEETS |
|---|---|---|---|
| NOVEMBER 2008 | AS SHOWN | VENTURA WELL VENTURA WELL BUILDING PLAN ELECTRICAL | WORK ORDER 02557 / FILE NUMBER E-1670 |
| DRAWN BY CALPOWER | | | |
| DESIGNED BY CALPOWER | | | |
| CHECKED BY CIVILTEC | | | |
| SUBMITTED BY CIVILTEC | | | |
| FIELD BOOKS | CALC BOOKS | APPROVED / APPROVED | REVISION |

E-401

X:\2007\07140-PL WORKWELL TREATMENT PLANT\DWG\SUBMITTALS\FINAL SUBMITTALS\E-401.DWG (02-27-09 10:04:12AM)

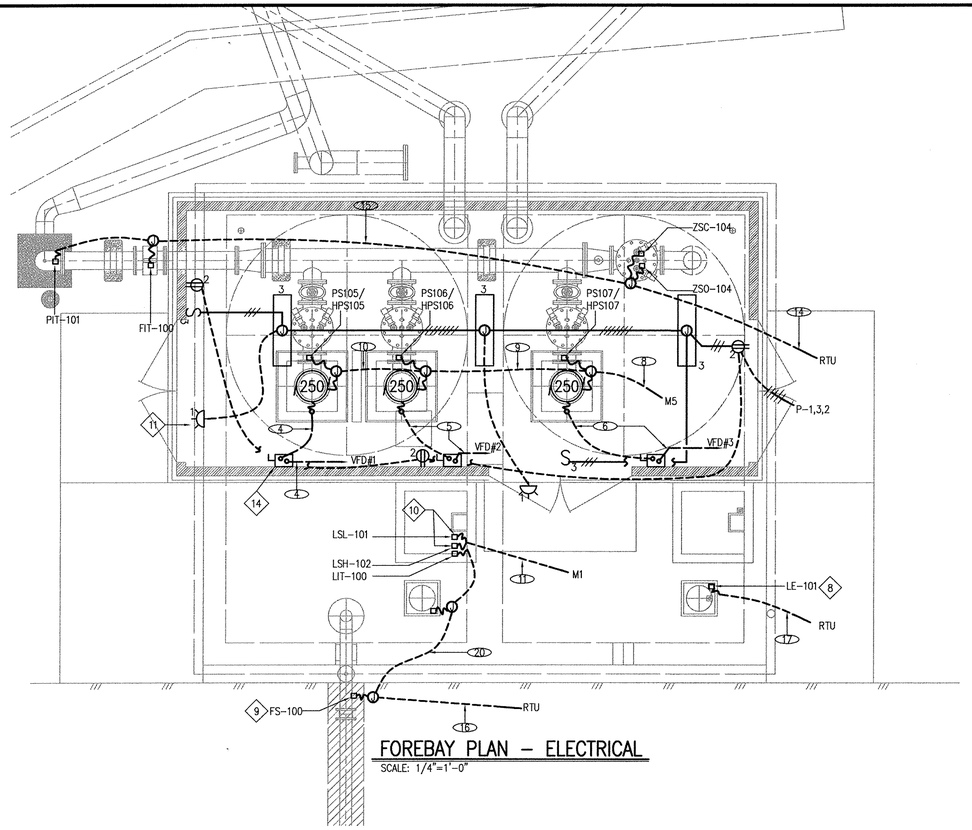


## FOREBAY PLAN – ELECTRICAL

SCALE: 1/4"=1'-0"

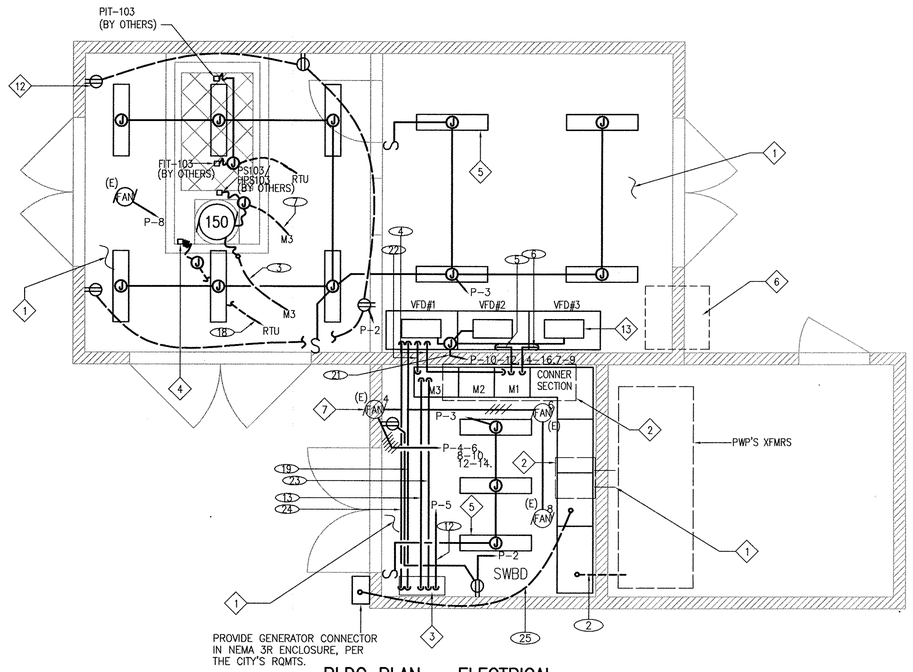


PROVIDE GENERATOR CONNECTOR IN NEMA 3R ENCLOSURE, PER THE CITY'S RQMTS.

## BLDG PLAN – ELECTRICAL

SCALE: 1/4"=1'-0"

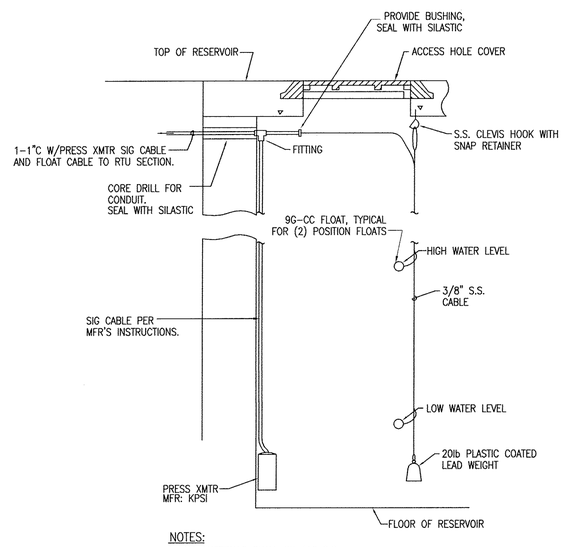


NOTES:

1. ALL MATERIALS SHALL BE 316 S.S.
2. RESEAL RESERVOIR TO MANUFACTURERS RECOMMENDATIONS.
3. ADJUST THE DEVICE LOCATIONS AT FIELD.

## LEVEL SENSOR MTG IN RESERVOIR

NOT TO SCALE

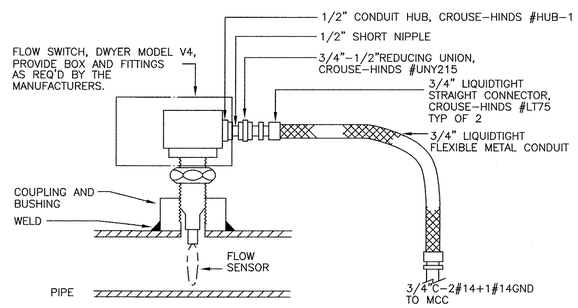


MANUFACTURER

FLOW SENSOR: W.E.ANDERSON #V4-SS-2-U
FLOW ELEMENT: SIGNET #P51530-P2

## FLOW SWITCH MTG DETAILS

NOT TO SCALE

## FEEDER SCHEDULE (X)

1. (2)4"C, FROM PWP'S POC TO PWP XFMR ENCLOSURE, PROVIDED PER THE PWP'S RQMTS.
2. (5) 5"C, FROM PWP XFMR ENCLOSURE TO SWBD, PROVIDED PER THE PWP'S RQMTS.
3. 2"C-3#4/0+1#4GND, FROM MCC TO WELL PUMP MOTOR.
4. 3"C-6#250MCM+1#3GND, FROM MCC TO BOOSTER NO.1 PUMP MOTOR.
5. 3"C-6#250MCM+1#3GND, FROM MCC TO BOOSTER NO.2 PUMP MOTOR.
6. 3"C-6#250MCM+1#3GND, FROM MCC TO BOOSTER NO.3 PUMP MOTOR.
7. 3/4"C-12#14+1#14GND. FROM "PS102/HPS102", "T-STAT", "SOLENOID", "SPC HTR, AT FIELD TO WELL PMP STARTER, MCC SECTION 2(M2). (CONTROL)
8. 1"C-36#14+1#14GND. FROM "PS/HPS", "T-STAT", "SOLENOID", "SPC HTR, AT BOOSTERS THRU MCC SECTION 5(M5), TO M2, M3, M4. (CONTROL)
9. 1"C-26#14+1#14GND. FROM "PS/HPS", "T-STAT", "SOLENOID", "SPC HTR, AT BOOSTERS BP-1 AND BP-2, THRU MCC SECTION 5(M5), TO M3, M4. (CONTROL)
10. 3/4"C-16#14+1#14GND. FROM "PS/HPS", "T-STAT", "SOLENOID", "SPC HTR, AT BOOSTERS BP-1, THRU MCC SECTION 5(M5), TO M2. (CONTROL)
11. 3/4"C-6#14+1#14GND. FROM "LSH" "LSL" TO M1. (CONTROL)
12. 3/4"C-3#12 (PWR), 10#14(CONTROL),+1#12GND. FROM MCC TO RTU. (POWER)
13. 1"C-30#14+1#14GND. FROM MCC TO RTU. (D/I/O)
14. 1"C-4PR#18 IND TWST, SHLD CABLES, 6#14 (ZSO, ZSC), FROM FIELD TO RTU.
15. 3/4"C-4PR#18 IND TWST, SHLD CABLES, FIELD CONDUIT.
16. 1"C-4PR#18 IND TWST, SHLD CABLES, "LIT100&101", 4#14(FS-100), FROM FIELD JB TO RTU.
17. 3/4"C-XMTR CABLE, FROM "LE101" TO RTU. PROVIDE THE XDCR CABLE PER THE EQUIPMENT MFR'S INSTRUCTIONS. (SIGNAL)
18. 1"C-XMTR CABLE, FROM "LIT102" TO RTU. PROVIDE THE XMTR CABLE PER THE EQUIPMENT MFR'S INSTRUCTIONS. (SIGNAL)
19. 1 1/2"C-8PR#18 IND TWST, SHLD CABLES, FROM VFD TO RTU. (A/I/O OF VFD)
20. 1"C-2PR#18 IND TWST, SHLD CABLES, AND SIG CABLE, FROM LIT-100 THRU JB TO RTU.
21. 3/4"C-6#12 (PWR), +1#12GND. FROM MCC(PNL "P") TO A/C UNITS. (POWER)
22. 3/4"C-6#14+1#14GND. FROM MCC TO VFDS. (PHASE FAIL RELAY CONTACTS)
23. (NOT USED)
24. 2"C-150#14+1#14GND. FROM VFD TO RTU. (D/I/O)
25. 4(3"C-3#500MCM(THWN-2)+1#4/0GND), FROM SWBD TO GEN CONNECTOR.

## CONSTRUCTION NOTES

1. REMOVE UNUSED ELECTRICAL EQUIPMENT AND COMPONENTS IN THE ROOM COMPLETELY. ALL THE REMAINING EQUIPMENT OR COMPONENTS ARE NOT NECESSARILY SHOWN.
2. REMOVE EXIST MCC AND RELATED CONDUITS AND WIRING COMPLETELY. MODIFY/EXTEND CONDUITS AND WIRING TO NEW MCC FOR THE REMAINING EQUIPMENT OR COMPONENTS.
3. NEW LOCATION OF RELOCATED EXIST RTU(PLC), LIQ-5 OF TESCO. MODIFY THE RTU BY FURNISHING NECESSARY MODULES PER THE DWG E-405. CONSULT THE MFR AS NECESSARY. MODIFY THE PNL TO PROVIDE THE MULTIRANGER PLUS BY MILLTRONICS PER THE MFR'S INSTRUCTIONS.
4. WELL LEVEL (DEPTH) TRANSDUCER LOCATED AT BUTTOM OF THE WELL. SUBMERCIBLE PRESSURE TRANSDUCER BY KPSI W/ CABLE AND CABLE HANGER. (BY OTHERS)
5. LIGHT FIXTURE, PENDANT, GENERAL PURPOSE, INDUSTRIAL, (2)-32W TUBES, 10% HARMONIC ELECTRONIC BALLAST, EJ232-120GEB10 BY LITHONIA. TYP 16 EA.
6. REMOVE UNUSED ELECTRICAL EQUIPMENT AND COMPONENTS IN THIS AREA COMPLETELY.
7. PROVIDE NEW CONDUITS, WIRES, AND THERMOSTAT CONTROLS FOR EXIST FANS.
8. PROVIDE ULTRA SONIC XDCR (DEPTH SENSOR) BY MILLTRONICS XDCR, PER THE MFR'S INSTRUCTIONS.
9. FLOW SWITCH. SEE THIS SHT FOR DETAIL.
10. FLOAT SWITCH. SEE THIS SHT FOR DETAIL.
11. 70W HIGH PRESSURE SODIUM LAMP W/ INTERNAL REFLECTOR, PRISMATIC POLYCARBONATED REFRACTOR, BUILT-IN 0-20FC ADJ PHOTOCELL CONTROL, UL APPROVED FOR WET LOCATION. HUBBELL #NRG-307 OR APPROVED EQUAL. TYP 2 EA.
12. PROVIDE PWR RECEPTACLE OUTLET, 125V, 20AMP, NEMA 5-20R IN CAST ALUM BOX SST COVERPLATE. TYP OF 9 EA.
13. PROVIDE PNL TOP-MTD A/C UNIT. MOUNT THE UNIT TO DRAIN CONDENSED WATER OUTSIDE THE PNL. TYP. 3 EA.
14. PROVIDE DISCONNECT SWITCH, 400AS, 400AF, HEAVY-DUTY, NEMA 1 TYPE, MTD ON WALL. TYP. 3 EA.

### SPECIAL NOTE

ALL THE ELECTRICAL DRAWINGS ARE SCHEMATIC. CONDUITS OR WIRINGS ARE NOT SHOWN FOR SOME EQUIPMENT/DEVICES. IT SHALL BE CONTRACTOR'S RESPONSIBILITY TO COMPLETE THE PROJECT CONSTRUCTION PER DRAWINGS AND SPEC AT HIS DISCRETION AT NO ADDITIONAL COST TO THE CITY. FOR ANY DESCREPACIES, CONTRACTOR SHALL SUBMIT REQUESTS FOR CLARIFICATION DURING BIDDING PHASE.

E-402

| REVISION | | |
|---|---|---|
| NO. | DESCRIPTION | DATE |
| | | |

REGISTERED PROFESSIONAL ENGINEER CHAE YOUNG LEE No E 12266 EXP 12-31-2010 ELECTRICAL STATE OF CALIFORNIA

APPROVED BY:
CHAE YOUNG LEE 12266 EE 3/2/09 DATE
APPROVED: DATE
APPROVED: DATE

PLANS PREPARED BY:
CIVILTEC engineering inc.
*General Civil, Municipal, Water and Wastewater Engineering, Planning, Construction Management and Surveying*
118 West Lime Avenue
Monrovia, Ca. 91016
Phone: (626) 357-0588
Fax: (626) 303-7957

Battelle
*The Business of Innovation*

CITY OF PASADENA INCORPORATED JUNE 1886

D.S.-209 & 210A

| DATE | SCALE | PASADENA WATER & POWER CITY OF PASADENA | SHEET NO 75 OF 79 SHEETS |
|---|---|---|---|
| NOVEMBER 2008 | AS SHOWN | | |
| DRAWN BY CALPOWER | | VENTURA WELL | WORK ORDER 02557 / FILE NUMBER E-1670 |
| DESIGNED BY CALPOWER | | VENTURA WELL BUILDING PLAN | |
| CHECKED BY CIVILTEC | | ELECTRICAL | |
| SUBMITED BY CIVILTEC | | | |
| FIELD BOOKS | CALC BOOKS | APPROVED / APPROVED | REVISION |

A:\02577\27140-IPR_MONROVIA_TREATMENT PLANT\DWGS\SUBMITTALS\FINAL SUBMITTALS\E-402.DWG 02-27-09 10:04:38AM

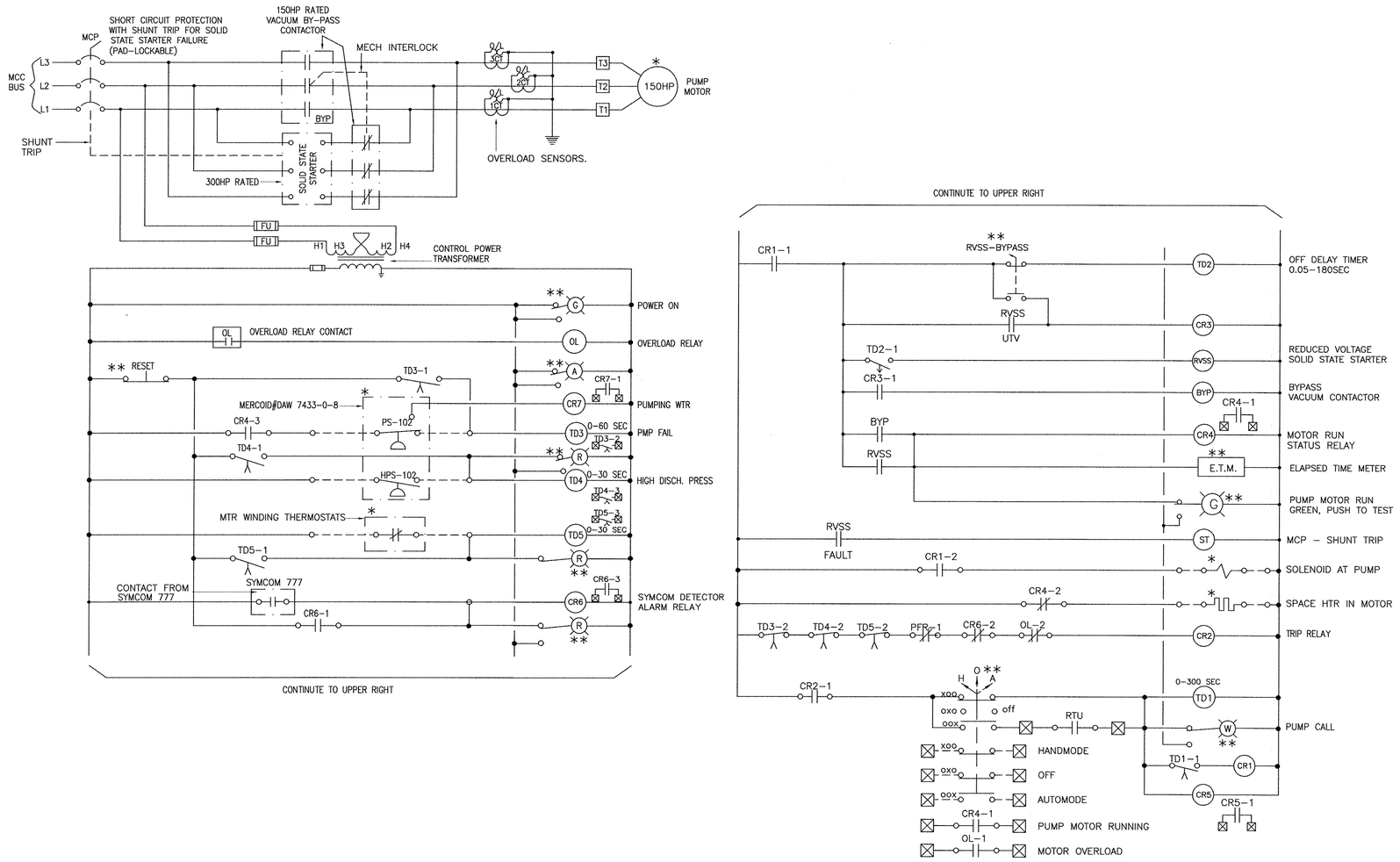


## VENTURA WELL PUMP MOTOR

* : DEVICE AT FIELD AND FIELD WIRING (BY THE EQUIPMENT INSTALLATION CONTRACTOR)

**: DEVICE AT FRONT SURFACE OF MCC.

⊠ : TERMINAL IN THE TELEMETRY SECTION FOR RTU INTERFACE. PROVIDE THE TERMINAL NUMBERS IN THE SHOP DWG FOR AN APPROVAL. CONTRACTOR SHALL CONSULT THE CITY FOR ADDITIONAL I/O OTHER THAN THE SHOWN ON THIS SCHEMATIC. PROVIDE SPARE TERMINALS (50EA) IN addition TO THE TERMINALS SHOWN. TERMINALS SHALL BE ARRANGED ON ONE SIDE OF THE BACK PANEL IN THE TELEMETRY SECTION NOT TO INTERFERE WITH THE RTU EQUIPMENT INSTALLATION.

### SPECIAL NOTES

THIS DIAGRAM IS PREPARED FOR THE CONTROL REFERENCE ONLY. THE CONTRACTOR SHALL BE RESPONSIBLE FOR PREPARATION OF THE FINAL DIAGRAM AND SUBMITTING THE DIAGRAM AS A PART OF THE SHOP DRAWING SUBMITTAL BASED ON THE CITY AND THE PUMP SYSTEM MFR'S RQMTS AND THE DEVICES MFR'S INSTRUCTIONS, PRIOR TO ANY ACTIVITIES.

E-403

| REVISION | | |
|---|---|---|
| NO. | DESCRIPTION | DATE |
| | | |

REGISTERED PROFESSIONAL ENGINEER CHAE YOUNG LEE No E 12266 EXP. SEP 30 2010 ELECTRICAL STATE OF CALIFORNIA

APPROVED BY: CHAE YOUNG LEE 12266 EE — DATE 3/2/09

APPROVED: — DATE

APPROVED: — DATE

PLANS PREPARED BY:

CIVILTEC engineering inc.

*General Civil, Municipal, Water and Wastewater Engineering, Planning, Construction Management and Surveying*

118 West Lime Avenue
Monrovia, Ca. 91016
Phone: (626) 357-0588
Fax: (626) 303-7957

Battelle
*The Business of Innovation*

CITY OF PASADENA INCORPORATED JUNE 1886

D.S.-209 & 210A

| | | | |
|---|---|---|---|
| DATE NOVEMBER 2008 | SCALE AS SHOWN | PASADENA WATER & POWER CITY OF PASADENA | SHEET NO 76 OF 79 SHEETS |
| DRAWN BY CALPOWER; DESIGNED BY CALPOWER; CHECKED BY CIVILTEC; SUBMITTED BY CIVILTEC | | VENTURA WELL PUMP CONTROL SCHEMATICS | WORK ORDER 02557 / FILE NUMBER E-1670 |
| FIELD BOOKS | CALC BOOKS | APPROVED / APPROVED | REVISION |

X:\2007\27140-PV MCKWELL TREATMENT PLANT\DWGS\SUBMITTALS\FINAL SUBMITTAL\E-403.DWG (02-27-09 10:05:27PM)

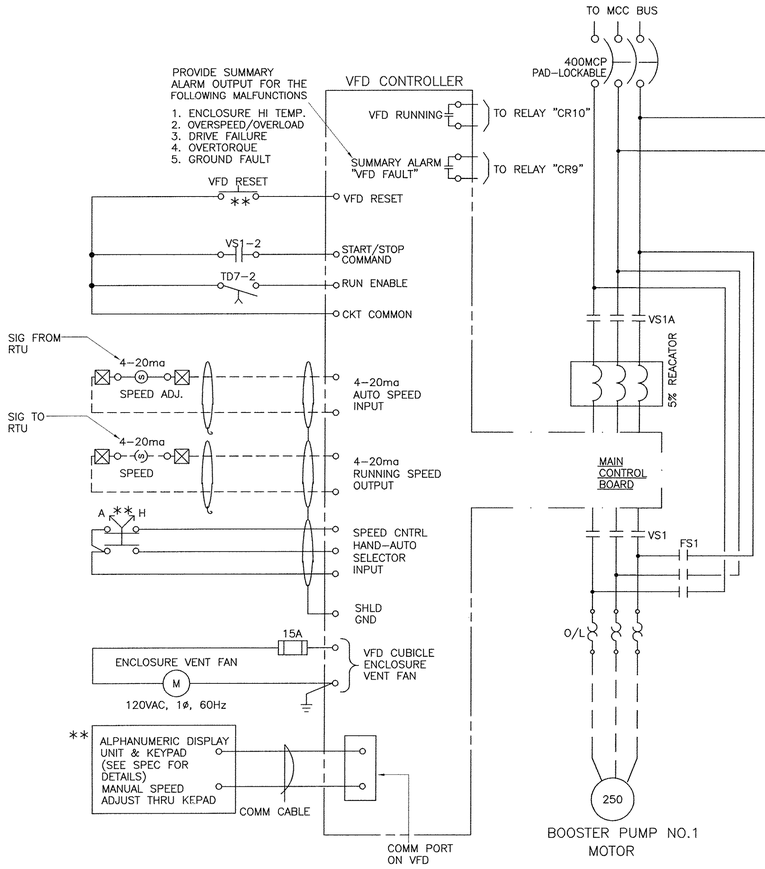


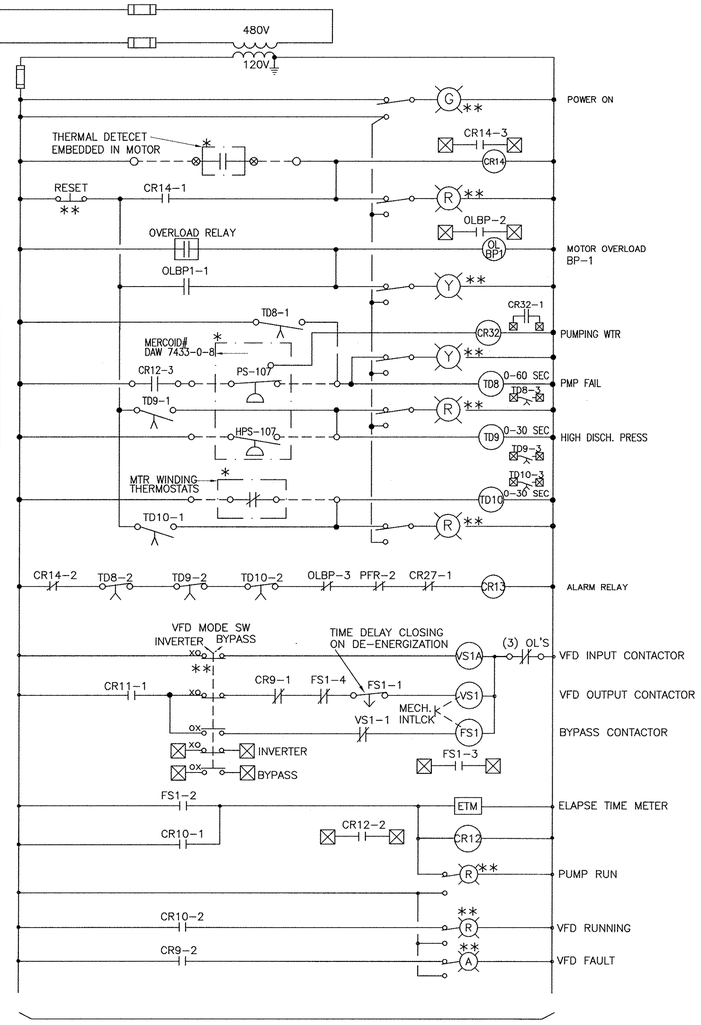


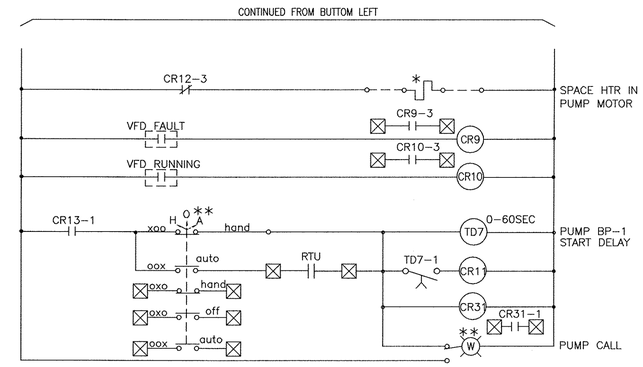


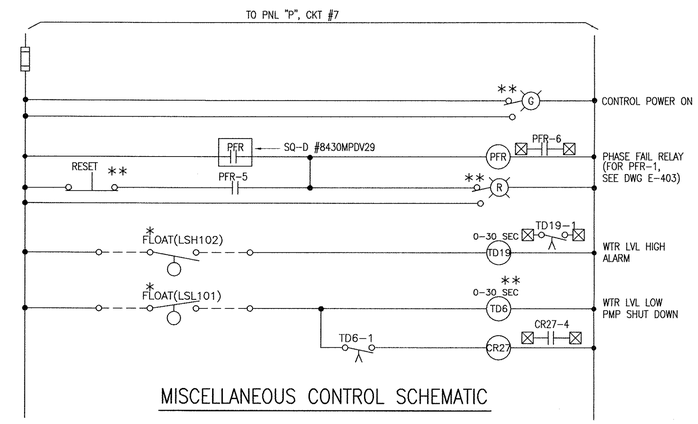


MISCELLANEOUS CONTROL SCHEMATIC

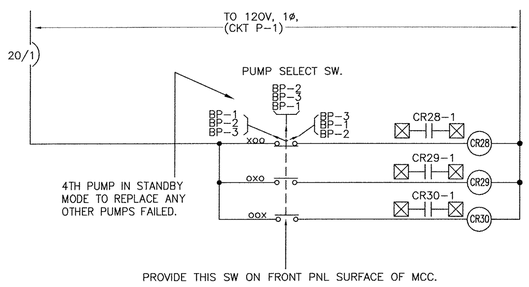


MISCELLANEOUS DIAGRAM

CONTINUE TO TOP RIGHT

VENTURA BOOSTER PUMP MOTOR NO.1

TYPICAL FOR BOOSTER PUMP MOTOR NO.2, NO.3, EXCEPT DEVICE NUMBERS VARY ACCORDINGLY.

**SPECIAL NOTES**

THIS DIAGRAM IS PREPARED FOR THE CONTROL REFERENCE ONLY. THE CONTRACTOR SHALL BE RESPONSIBLE FOR PREPARATION OF THE FINAL DIAGRAM AND SUBMITTING THE DIAGRAM AS A PART OF THE SHOP DRAWING SUBMITTAL BASED ON THE CITY AND THE PUMP SYSTEM MFR'S RQMTS AND THE DEVICES MFR'S INSTRUCTIONS, PRIOR TO ANY ACTIVITIES.

* : DEVICE AT FIELD AND FIELD WIRING (BY THE EQUIPMENT INSTALLATION CONTRACTOR)

**: DEVICE AT FRONT SURFACE OF MCC.

⊠ : TERMINAL IN THE TELEMETRY SECTION FOR RTU INTERFACE. PROVIDE THE TERMINAL NUMBERS IN THE SHOP DWG FOR AN APPROVAL. CONTRACTOR SHALL CONSULT THE CITY FOR ADDITIONAL I/O OTHER THAN THE SHOWN ON THIS SCHEMATIC. PROVIDE SPARE TERMINALS (50EA) IN ADDITION TO THE TERMINALS SHOWN. TERMINALS SHALL BE ARRANGED ON ONE SIDE OF THE BACK PANEL IN THE TELEMETRY SECTION NOT TO INTERFERE WITH THE RTU EQUIPMENT INSTALLATION.

E-404

| REVISION | | |
|---|---|---|
| NO. | DESCRIPTION | DATE |
| | | |

REGISTERED PROFESSIONAL ENGINEER CHAE YOUNG LEE No E 12266 EXP. 12-31-2010 ELECTRICAL STATE OF CALIFORNIA

APPROVED BY: CHAE YOUNG LEE 12266 EE — DATE 3/4/09
APPROVED: — DATE
APPROVED: — DATE

PLANS PREPARED BY: CIVILTEC engineering inc.

*General Civil, Municipal, Water and Wastewater Engineering, Planning, Construction Management and Surveying*

118 West Lime Avenue
Monrovia, Ca. 91016
Phone: (626) 357-0588
Fax: (626) 303-7957

Battelle — The Business of Innovation

CITY OF PASADENA — INCORPORATED JUNE 1886

D.S.-209 & 210A

| | | | |
|---|---|---|---|
| DATE: NOVEMBER 2008 | SCALE: AS SHOWN | PASADENA WATER & POWER, CITY OF PASADENA | SHEET NO 77 OF 79 SHEETS |
| DRAWN BY: CALPOWER; DESIGNED BY: CALPOWER; CHECKED BY: CIVILTEC; SUBMITTED BY: CIVILTEC | | VENTURA BOOSTER PUMP CONTROL SCHEMATICS | WORK ORDER: 02557 / FILE NUMBER: E-1670 |
| FIELD BOOKS | CALC BOOKS | APPROVED / APPROVED | REVISION |

J:\02027\27140-PL MONROVIA TREATMENT PLANT\DWG\SUBMITTALS\FINAL SUBMITTAL\E-404.DWG (02-27-09 10:06:54AM)

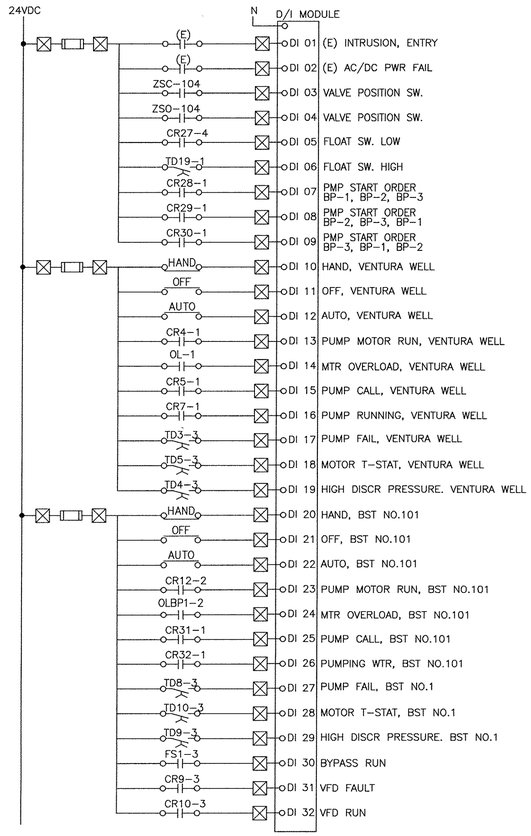


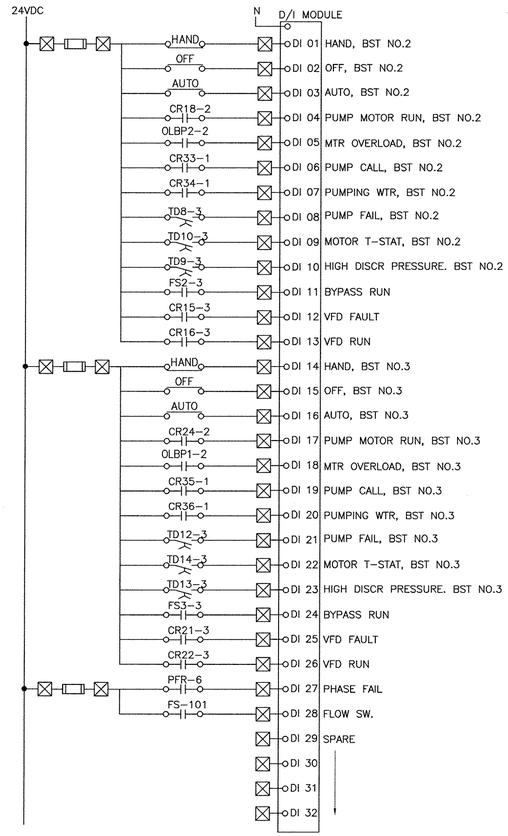


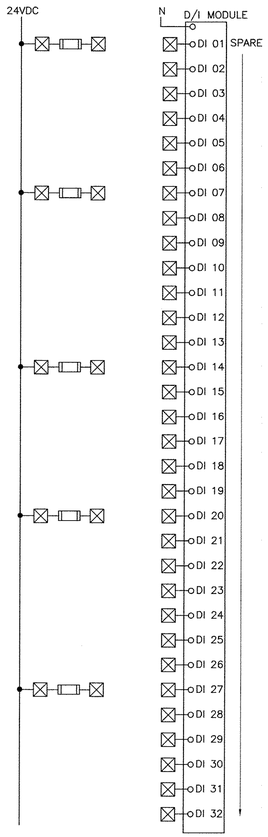


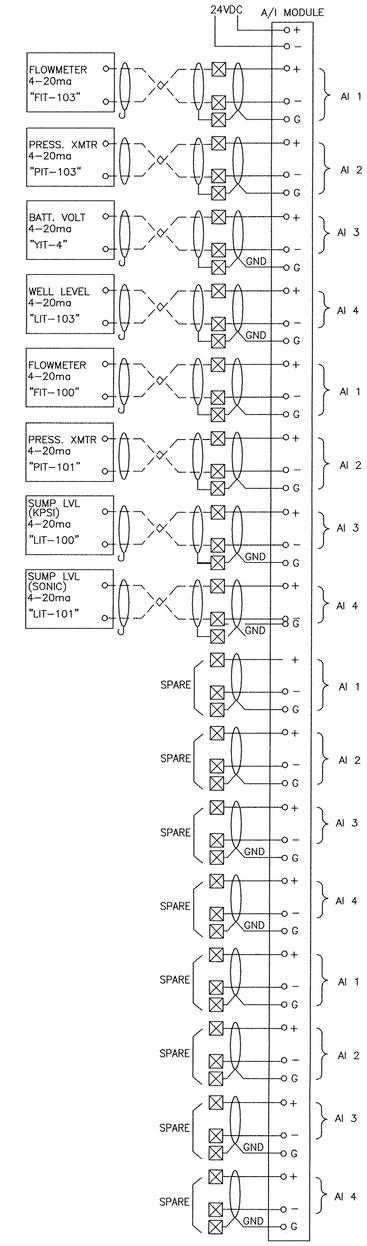


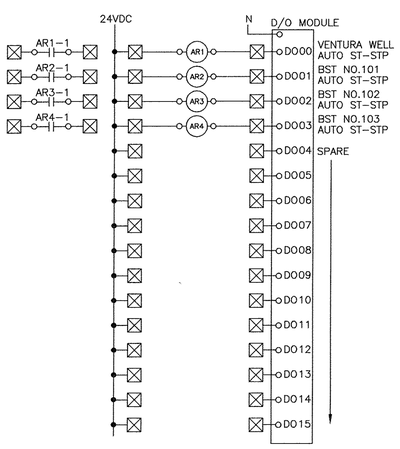


## VENTURA WELL

### NOTES FOR RTU(PLC) SYSTEM

1. MODIFY EXIST RTU BY PROVIDING NECESSARY MODULES AND ACCESSORIES TO ACCOMMODATE I/O'S AS SHOWN.
2. RTU AND SCADA SYSTEM PROGRAMMING BY THE CITY.

### SYMBOLS

(SEE DWG E-001 FOR OTHER SYMBOLS)

- ☒ TERMINAL FOR RTU(PLC) CONNECTION
- — — FIELD WIRING (BY CONTRACTOR OR RESPONSIBLE VENDOR)
- ▭ FUSE AT TERMINAL BLOCK

E-405

| REVISION | | |
|---|---|---|
| NO. | DESCRIPTION | DATE |
| | | |
| | | |
| | | |
| | | |

REGISTERED PROFESSIONAL ENGINEER CHAE YOUNG LEE No E 12266 Exp. sep 30, 2010 ELECTRICAL STATE OF CALIFORNIA

APPROVED BY: CHAE YOUNG LEE 12266 EE — DATE 3/2/09
APPROVED: — DATE
APPROVED: — DATE

PLANS PREPARED BY:
CIVILTEC engineering inc.
*General Civil, Municipal, Water and Wastewater Engineering, Planning, Construction Management and Surveying*
118 West Lime Avenue
Monrovia, Ca. 91016
Phone: (626) 357-0588
Fax: (626) 303-7957

Battelle
*The Business of Innovation*

CITY OF PASADENA INCORPORATED JUNE 1886

D.S.-209 & 210A

| | | | |
|---|---|---|---|
| DATE NOVEMBER 2008 | SCALE AS SHOWN | PASADENA WATER & POWER CITY OF PASADENA | SHEET NO 78 OF 79 SHEETS |
| DRAWN BY CALPOWER; DESIGNED BY CALPOWER; CHECKED BY CIVILTEC; SUBMITTED BY CIVILTEC | | VENTURA WELL PLC INPUT/OUTPUT DIAGRAM | WORK ORDER 02557 / FILE NUMBER E-1670 |
| FIELD BOOKS | CALC BOOKS | APPROVED / APPROVED | REVISION |

A:\2007\27140-PL MONKHILL TREATMENT PLANT\DWGS\SUBMITTALS\FINAL SUBMITTAL\E-405.DWG (02-27-09 10:07:18AM)

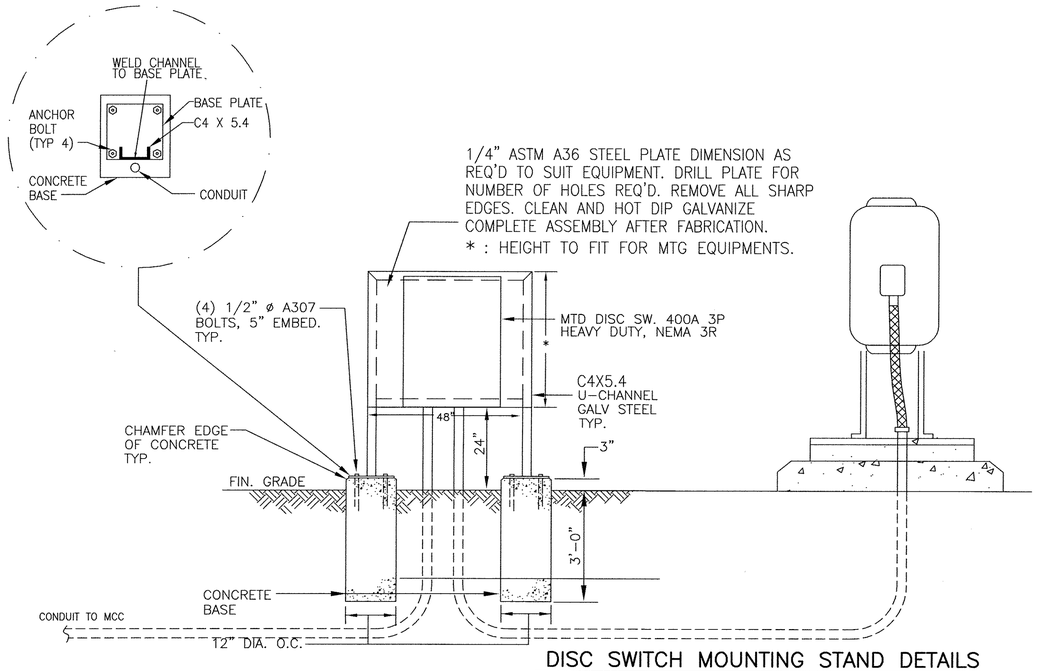


## DISC SWITCH MOUNTING STAND DETAILS

NOT TO SCALE

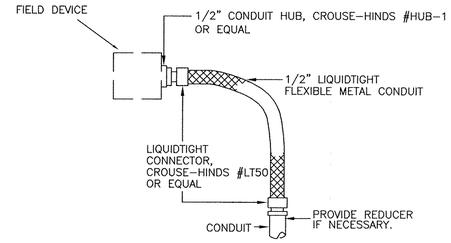


## FIELD DEVICE CONNECTION DETAILS

NOT TO SCALE

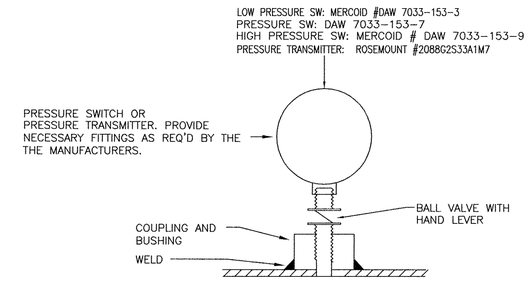


## PRESSURE SWITCH OR TRANSMITTER MOUNTING DETAIL

NOT TO SCALE

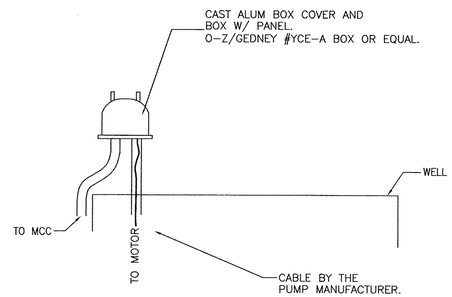


## WELLHEAD BOX DETAIL

NOT TO SCALE

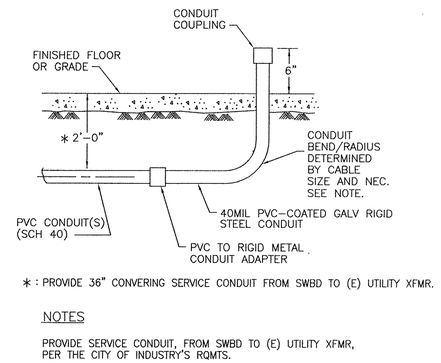


NOTES

PROVIDE SERVICE CONDUIT, FROM SWBD TO (E) UTILITY XFMR, PER THE CITY OF INDUSTRY'S RQMTS.

## UNDERGROUND CONDUIT AND CONDUIT STUB-UP

NOT TO SCALE

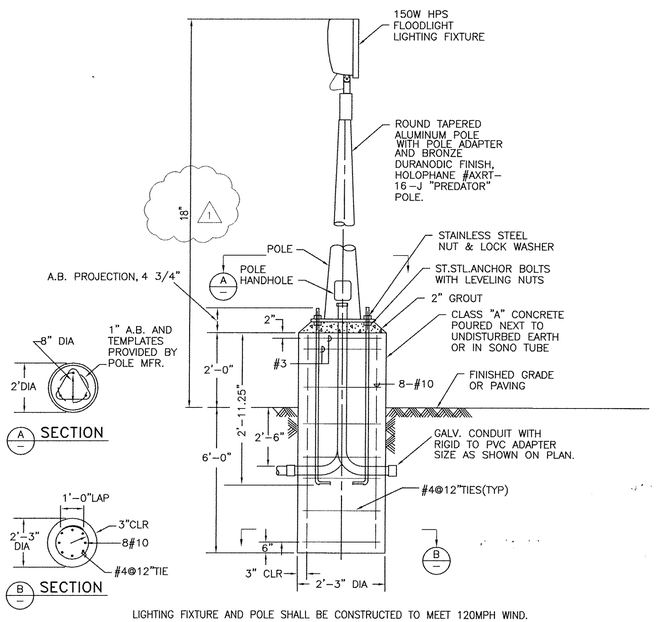


LIGHTING FIXTURE AND POLE SHALL BE CONSTRUCTED TO MEET 120MPH WIND.

## FLOODLIGHT LIGHTING FIXTURE(S) AND POLE

NOT TO SCALE

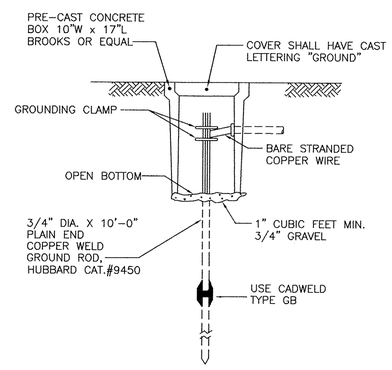


## GROUND DETAIL

NOT TO SCALE

E-501

| REVISION | | |
|---|---|---|
| NO. | DESCRIPTION | DATE |
| 1 | BUILDING DEPARTMENT PLAN CHECK COMMENTS | 01/05/09 |

REGISTERED PROFESSIONAL ENGINEER CHAE YOUNG LEE No E 12266 EXP. 06/30/2010 ELECTRICAL STATE OF CALIFORNIA

APPROVED BY:
CHAE YOUNG LEE 12266 EE — DATE 3/2/09
APPROVED: — DATE
APPROVED: — DATE

PLANS PREPARED BY:
CIVILTEC engineering inc.
*General Civil, Municipal, Water and Wastewater Engineering, Planning, Construction Management and Surveying*
118 West Lime Avenue
Monrovia, Ca. 91016
Phone: (626) 357-0588
Fax: (626) 303-7957

Battelle
*The Business of Innovation*

CITY OF PASADENA INCORPORATED JUNE 1886

D.S.-209 & 210A

| | | | |
|---|---|---|---|
| DATE NOVEMBER 2008 | SCALE AS SHOWN | PASADENA WATER & POWER CITY OF PASADENA | SHEET NO 79 OF 79 SHEETS |
| DRAWN BY CALPOWER; DESIGNED BY CALPOWER; CHECKED BY CIVILTEC; SUBMITTED BY CIVILTEC | | WINDSOR WELL MISCELLANEOUS DETAILS | WORK ORDER 02557 / FILE NUMBER E-1670 |
| FIELD BOOKS | CALC BOOKS | APPROVED / APPROVED | REVISION |

X:\2007\27140-JPL MONWHEEL TREATMENT PLANT\DWG\SUBMITTALS\FINAL SUBMITTAL\E-501.DWG (03-02-09 9:10:12AM)

**Response to California Department of Public Health (DPH) Comments**
**Draft Remedial Design/Remedial Action (RD/RA) Work Plan**
**For the Monk Hill Treatment system (MHTS), November 2008**

| | DPH Comment | Response to Comment |
|---|---|---|
| 1 | **General:** While the basic processes to remove the target contaminants, VOCs, and perchlorate are described, some of the operational details involving utility waters and overall operating strategy have not yet been fully developed, leading us to be concerned about the ability to operate the plant consistently and in a reliable fashion. We are concerned that for a significant portion of the time, the plant may not be able to provide potable water to the City of Pasadena and instead will be discharging back to the Arroyo Seco.<br><br>These are the same concerns about the proposed operating strategy that were brought up in our October 2007 meeting. | Sufficient data is not currently available to accurately determine appropriate operating parameters such as pumping schedules and media usage under the previously discussed year around staggered well operating strategy. Therefore, the proposed operating strategy now focuses on full capacity operation for only a partial year. Full capacity operation will eliminate the concern regarding system down time (i.e., discharging to the Arroyo Seco) during well startup and purging. Consideration may be given to an alternate operating strategy in the future after sufficient operating and monitoring data have been collected. Any future changes to the operating strategy would be developed with input and approval of the DPH. |
| 2 | **General:** CDPH recommends that the City anticipate and prepare for the need to add temporary or permanent (or a combination) equipment to treat the various utility waste waters while allowing the MHTS to continue to discharge to the Windsor Reservoir. | The proposed operating strategy now focuses on full capacity operation for only a partial year. Operating in this manor will eliminate the need to discharge to waste during the normal operating period. Based on the proposed 7,000 gpm flow rate, it is anticipated that the MHTS can operation for approximately 6 months out of the year given PWP's allotment of groundwater that can be pumped from the production wells. |
| 3 | **General:** This report is not sufficiently detailed for CDPH permitting purposes. We will need to have this report expanded or a separate report prepared. | Comment noted. Additional information will be provided in the form of the 97-005 document, technical memoranda, and other submittals to support the DPH permitting process as necessary. |
| 4 | **1.2 Objectives:** The enumerated objectives imply, or should include, that the overall objective is to restore aquifer water quality so that the City can again reliably utilize its water rights to supply potable water. | The following objective has been added to Section 1.2: "Ultimately restore aquifer water quality so that the City of Pasadena can reliably utilize its water rights to supply potable water." |

| | DPH Comment | Response to Comment |
|---|---|---|
| 5 | **2.1 Last sentence**: Please edit: .... PWP will ~~chlorinate~~ disinfect the water ~~through a~~ using ~~chloramination~~ chloramine and send the ~~chlorinated~~ disinfected water to.... | The requested revision has been made. |
| 6 | **2.4.4** In-bed sample probes are not normally used in ion-exchange applications, especially for perchlorate removal, since the resin beds are shallower than activated carbon beds and there would only be a few inches between probes. | Calgon has included in-bed sample probes on both the IX and GAC vessels. Sampling frequency and use, if any, of these probes can be determined as part of the final DPH operating permit and system O&M manual. |
| 7 | **2.4.8 and 2.5**: SCADA and Instrumentation: The Workplan text states that monitoring instrumentation on the <u>treatment system</u> will be interfaced with the existing SCADA system. This is shown on the P&ID for the booster pumps, but not on the P&IDs for the treatment system tanks or the wells. Only local alarms and indicators are shown. Section 3.3.5 mentions SCADA components will be installed so that the wells can be remotely operated and monitored. | Local instrumentation readouts and SCADA integration is differentiated on the P&IDs by various interface symbols as shown in the legend on design drawing PID-101. New Table 2-3 in the document summarizes the treatment system instrumentation and controls.<br><br>Section 3.3.5 has been revised to state that SCADA components will be installed so that the wells can be remotely monitored. No remote operation capabilities will be provided. |
| 8 | **2.4.8 and 2.5**: Sheet TPM-103 shows the flow meters/indicating transmitters mounted 12 to 13 feet above the slab. Make sure all pressure gauges, pressure differential, and flow readings are installed at elevations so that the operators can easily read them. | Local instrumentation readouts will be located such that operators can easily view them. |

<table>
<tr>
<td>9</td>
<td>2.4.8 and 2.5: On sheet TPM-104 filters F-401 and F-402 appear to be too small to handle the IX and GAC backwash flows and potential solid loadings without quickly clogging.</td>
<td>The filter vessels have the following capacities. F-401 is designated for the backwash of the IX resin with 4 bags. Maximum flow expected from the IX backwash process is 300 gpm. F-402 is designated for the backwash of the LGAC resin with 8 bags. Maximum flow expected from the LGAC process is 1,100 gpm. Clogging of bags will be dealt with as needed but will most likely only need to be employed once a year during annual change out of Resin and Media.
<table>
<tr><th>No. of Bags</th><th>Max Water Flow (gpm)*</th><th>Filter Area (sq ft)**</th><th>Inlet/Outlet Size (in)***</th></tr>
<tr><td>3</td><td>230</td><td>13.5</td><td>3</td></tr>
<tr><td>4</td><td>400</td><td>18</td><td>4, 3</td></tr>
<tr><td>6</td><td>900</td><td>27</td><td>6, 4, 8</td></tr>
<tr><td>8</td><td>1750</td><td>36</td><td>8, 6. 4</td></tr>
<tr><td>12</td><td>2600</td><td>54</td><td>10, 8, 6</td></tr>
</table>
</td>
</tr>
<tr>
<td>10</td>
<td>2.4.8 and 2.5: Line tag 7 on PID 108 reads GAS Effluent instead of GAC Effluent.</td>
<td>The line tag on Design Drawing PID-108 has been corrected.</td>
</tr>
</table>

| | | |
|---|---|---|
| 11 | **3.3.2/3.3.4 Initial Development Pumping/Well Development Pumping:** Please clarify the differences between section 3.3.2 pumping and section 3.3.4 pumping. Please clarify the text as to whether one well will be re-developed at a time. How will this be staged? | The initial development pumping discussed in Section 3.3.2 is designed to flush impacted fines from the gravel pack and borehole face and to consolidate the gravel pack. This initial development pumping includes four 10-hour constant rate pump tests. The well development pumping discussed in Section 3.3.4 is designed to estimate the maximum extraction capacity of the well and the response of the aquifer system to the stresses during extraction (8-hour variable rate test) and to evaluate performance at the design flow rate and collect data for estimating aquifer parameters (constant rate test). To avoid interferences between wells during pumping, it is assumed that development pumping will be performed in one well at a time. Groundwater extracted during these stages of the well rehabilitation effort will be routed to the MHTS for treatment, and as such, minimal additional water storage and piping equipment will be required. All equipment required for the development pumping will be staged at the respective wellhead. |
| 12 | **3.3.2/3.3.4 Initial Development Pumping/Well Development Pumping:** The plan proposes that the development waters be treated at the MHTS, but does not mention whether or not a sacrificial charge of the IX and GAC media will be used. | Sacrificial IX and GAC media will be used to treat water produced during the initial development and well development pumping. |
| 13 | **3.3.2/3.3.4 Initial Development Pumping/Well Development Pumping:** The wells should be disinfected and tested free of coliform bacteria before sending the water to the MHTS and not risk introducing bacteria into the beds. | Sacrificial IX and GAC media will be used to treat water produced during the initial development and well development pumping. The sacrificial media will be removed following completion of the well development and pump testing, and each vessel will be inspected, disinfected, and tested prior to virgin media being loaded for startup of the treatment system. |
| 14 | **3.4 Discrete-Depth Groundwater Sampling:** VOC testing should include a full GC/MS scan and include lab reporting of TICs and unknown peaks as well as all target analytes. | Discrete-depth groundwater sampling will include VOC analysis using GC/MS method 524.2, and all TICs and unknown peaks (other than instrument artifacts) will be reported by the lab. Table K-2 of Appendix K (Sampling and Analysis Plan) provides a listing of the analyses to be performed during the discrete depth groundwater sampling. |

| | | |
|---|---|---|
| 15 | **3.7 Disposal of Extracted Water from Initial Well Cleaning:** The Workplan text would flow more logically if this section was included at the end of section 3.3.1 | Section 3.7 has been moved to Section 3.3.2. |
| 16 | **3.7 Disposal of Extracted Water from Initial Well Cleaning:** The backwash water from the sand filter will also need to be disposed. | Section 3.3.2 (formerly 3.7) has been revised to indicate that water generated from backwashing the sand filter will also be characterized and disposed off-site. |
| 17 | **3.7 Disposal of Extracted Water from Initial Well Cleaning:** The last sentence in this section proposes to use the main MHTS to treat water generated in the later stages of the rehabilitation effort for treatment and disposal. Thus, the initial charges of IX and GAC media may become contaminated or otherwise unusable and may need to be changed prematurely. Also, without alternative treatment and disposal other than the MHTS, when any one well has to be disinfected or otherwise maintained, the entire MHTS will not be producing potable water.<br><br>In the public water supply industry, in an effort to avoid plant upsets and expensive and time-consuming media disinfection and replacements, groundwater treatment operators will typically take all possible actions to avoid introducing low quality water into their plan and risk damaging or infecting media beds. | Sacrificial IX and GAC media will be used to treat water produced during the initial development and well development pumping. The sacrificial media will be removed following completion of the well development and pump testing, and each vessel will be inspected, disinfected, and tested prior to virgin media being loaded for startup of the treatment system. |
| 18 | **4.1.3 Surface Water Discharge Permitting**: The text mentions an estimated 60 acre-feet of utility water will be generated per year from periodic flushing and backwashing. What assumptions went into this estimate? How was this calculated? What about water wasted from re-starting of idle wells? | Under the proposed operating strategy, the productions wells will be restarted (i.e., purged and tested) each year prior to the beginning of the pumping season. Assuming that two days of purging at full flow (7,000 gpm) will be sufficient to obtain negative bacterial testing results, this would generate approximately 62 acre-feet of water which will be discharged to the Arroyo Seco each year before the treatment system is brought on-line for the production of drinking water. |

| | | |
|---|---|---|
| 19 | **4.1.3 Surface Water Discharge Permitting**: Also, if the entire MHTS will be used to treat waste utility water before discharge to the Arroyo, production from the wells will not be available to the Windsor reservoir. How many days per year will this occur? What will be the cost impact to the City as this will require the lost production to be made up with purchased water? | Operating the treatment system at full capacity for part of the year will limit the time that water will be discharged to the Arroyo Seco. Discharge of waste water to the Arroyo Seco will only occur during the initial well startup each year (which will be completed prior to beginning the operating season). Discharge to the Arroyo Seco may also be necessary during the forward rinse of IX resin after changeout if the resin cannot be pre-rinsed at Calgon Carbon's Santa Fe Springs facility. If forward rinsing of the IX resin is completed at the MHTS, then the treatment system would discharge to the Arroyo Seco for a minimum of one day during the operating season to complete the forward flush after fresh IX resin is installed in each vessel and to allow time for receipt of analytical results indicating that levels of nitrosamines are acceptable prior to bringing the system back on-line. |
| 20 | **4.2.4 Waste Management:** The last bullet listing should include the waste waters generated by the backwashing out of fines from the fresh IX resin and GAC. Additional waste waters will be generated if backflushing of media is necessary to regularly de-compact media beds or lift off sediments without fluidizing the beds. | The term "maintenance" is meant to include backwashing after media changeouts. Backflushing should not be required due to the use of pre-filters on the treatment system. |
| 21 | **5.2 Treatment System Startup:** The first sentence should also refer to GAC equipment. | The first sentence has been revised to also refer to GAC equipment. |
| 22 | **5.2 Treatment System Startup:** Backwashing of GAC fines will generate significant volumes of wastewater with high solids content. The GAC backwash filter seems too small and will probably become quickly clogged. Consider a holding tank to settle out the carbon fines. It has been found to be advantageous to disinfect (using a high pH soak) each carbon bed upon installation to minimize bacteriologic problems later on. | As indicated in response to comment #9, the filter vessels have been adequately sized for the application. Clogging of bags will be dealt with as needed but will most likely only need to be employed once a year during annual change out of Resin and Media. |

| | | |
|---|---|---|
| 23 | **5.2 Treatment System Startup:** Likewise, the IX backwash filter may be too small to handle the solids loading. After backwashing the resin, it must be forward flushed sufficiently so that nitrosamine concentrations leaving the resin bed is below 10 micrograms/L. Other water systems have to flush between 10 and 40 bed volumes or more and confirm this with lab results. Again, unless other arrangements are made, the entire plant would be discharging to the Arroyo during these times. | As described in response to comment #19, discharge to the Arroyo Seco will be necessary during the forward rinse of IX resin after changeout if the resin cannot be pre-rinsed at Calgon Carbon's Santa Fe Springs facility. |
| 24 | **5.3.1 Ion Exchange Operation:** The first paragraph mentions flowrates of 6,300 to 7,000 gpm, but does not address times when only the Arroyo Well (2,200 gpm) will be pumping. Has the staggered well schedule been dropped? Will 2,200 gpm over four vessel pairs be above the minimum flow per vessel so that all media beds will avoid an idle condition? | The operating strategy for the MHTS is now full capacity operation for a partial year with no staggered well startup. |
| 25 | **5.3.1 Ion Exchange Operation:** When the resin in a lead vessel is being replaced, that vessel pair will be out of service and the plant flow will have to be reduced by 25%. CDPH will require lead-lag treatment at all times. | Section 5.3.1 has been revised to indicate that an entire vessel pair will be taken out of service when resin in the lead vessel needs to be changed. The DPH's requirement for lead-lag treatment at all times has also been noted. |
| 26 | **5.3.1 Ion Exchange Operation:** The backwash rate of 150 gpm in a 12 ft. diameter vessel may be insufficient to adequately fluidize a new bed of resin to flush out all of the fines. In addition, fresh resin beds must be adequately forward flushed (downflow) to reduce the formation of nitrosamines to below 10 μg/L. Other systems typically flush to waste for 10 to 40 bed volumes to ensure Notification Levels are met before putting a fresh resin bed online. | The backwash rate has been verified by Calgon Carbon as being adequate. Section 5.3.1 has been revised to indicate that new resin beds will be forward-flushed to reduce nitrosamine to below 10 μg/L, and that laboratory results will verify that water passing through the new resin bed meets this criterion before the vessel pair is brought back on-line. If this cannot be completed at Calgon Carbon's Santa Fe Springs facility, then it will be completed at the MHTS. |
| 27 | **5.3.1 Ion Exchange Operation:** Some systems differentiate back<u>washing</u>, sufficient flow to fluidize a bed and remove fines, from back<u>flushing</u>, at a lower flowrate to decompress a bed and reduce pressure drop across the bed. | Section 5.3.1 has been revised to indicate the difference between backwashing and backflushing. However, it has been noted that backflushing should not be required due to the use of pre-filters on the treatment system. |

| | | |
|---|---|---|
| 28 | **5.3.1 Ion Exchange Operation:** The fourth paragraph also mentions that backwash water discharged from the resin fill line should be observed for clarity to determine the duration of backwashing. How will this observation be made? The drawings show no sight glass in the lines.<br><br>The text also mentions the possibility of running the dirty backflush water through a pair of the plant's GAC vessels or a portable sacrificial GAC unit. Using the MHTS GAC vessels for this purpose risks bacteriological contamination and clogging of the GAC unit with backflushed solids from the resin bed being serviced. The use of an auxiliary GAC unit for treating these utility waters is much more preferable in terms of plant reliability and reduced carbon changeouts and the labor and costs of these changeouts. | The backwash water can be viewed by collecting a small sample from various locations, including a number of ball valves on the 4-inch carbon and resin fill pipelines as well as the underside of the filter housing. A sight glass would not be the best option for viewing the quality of backwash water.<br><br>Potable water will be used to backwash the IX beds. This will occur after the IX vessels have been thoroughly shock chlorinated and bacteriological testing has been completed. Any backwash water from the IX resin will first enter Filter F-401 prior to entering in the GAC vessels. Therefore bacteria and solids problems will not be a concern. |
| 29 | **5.3.2 GAC Operation:** Please clarify whether this facility will use virgin or reactivated GAC. Perhaps reactivated carbon can be used for treating utility waters. | Virgin GAC will be used in the MHTS. This has been clarified in Section 5.3.2. |
| 30 | **5.3.2 GAC Operation:** The third paragraph in this section should be expanded to address the backwashing of GAC to remove the fines when initially charging a vessel. Make sure the backwash filtering system can handle the solids load without becoming quickly clogged. A changeout of a carbon bed will require the lag vessel to also be taken out of service and a proportional reduction of plant throughput during the changeout. Treatment though a single vessel (either IX or GAC) would not meet CDPH multi-barrier treatment criteria as applied to extremely impaired drinking water sources. | Paragraph 3 of Section 5.3.2 has been revised to include backwashing of GAC vessles after new media is loaded. Section 5.3.2 has also been revised to note DPH's requirement for lead-lag treatment at all times, and to indicate that an entire vessel pair will be taken out of service when resin in the lead vessel needs to be changed. |
| 31 | **5.3.2 GAC Operation:** The fourth paragraph should be addressing backflushing, which de-compresses the bed and removes silt and fines, without fluidizing the bed. | Section 5.3.2 has been revised to indicate the difference between backwashing and backflushing. However, it has also been noted that backflushing should not be required due to the use of pre-filters on the treatment system. |

| | | |
|---|---|---|
| 32 | **5.3.4 Utility Water Treatment:** This section should be clarified by breaking it into two parts and addressing each separately: utility water from backwashing and backflushing of media, and utility water from well start-up and maintenance activities (other than initial well rehabilitation activities). | This section has been clarified by discussing treatment of annual well purge water separately from treatment of water generated from backwashing and backflushing. |
| 33 | **5.3.4 Utility Water Treatment:** It would be preferable that the wells are disinfected prior to pump testing and purging and that at least the waters involved with well disinfection activities be treated separately, not in the MHTS vessels. | Sacrificial IX and GAC media will be used to treat water produced during the pump testing. The sacrificial media will be removed following completion of the well development and pump testing, and each vessel will be inspected, disinfected, and tested prior to virgin media being loaded for startup of the treatment system. |
| 34 | **5.3.4 Utility Water Treatment:** The first paragraph following Table 5.1 mentions that the production wells will be periodically disinfected at "select intervals" e.g. once a month during pump downtimes. This statement should be explained in more detail. This will result in many disinfection activities during the year, when the plant will be sending water to the Arroyo instead of the reservoir. There is a risk that this could occur during times of high demand, and the City would have to purchase MWD water to make up for Monk Hill water that is unavailable. | Purging of water will only occur during annual well start-up. Well startup will be completed prior to the start of the operational season, avoiding unnecessary downtime during the time that drinking water is being produced. Chlorination of wells during pump downtimes will be performed as needed; more frequently in the beginning and then as needed based on periodic monitoring results. |
| 35 | **5.3.4 Utility Water Treatment:** The citation of AWWA C654 should refer to section 4.5 of that standard. The proposed chlorine concentration of 250 mg/L is much higher than the 50 mg/L called for in the standard. We have seen cases where over-chlorinating a well has damaged electrical insulation of wiring on submersible pumps.<br><br>Coliform samples must be collected at least 15 minutes after the well has been purged to zero chlorine residual, and a duplicate sample a minimum of 30 minutes later, per the C654 standard, section 5.1. Superchlorinating wells with 250 mg/L of chlorine may take days or weeks to purge out. | The proposed chlorine concentration of 250 mg/L was included per PWP's recommendation based on past experience with operation of the Monk Hill wells. Based on PWP's prior experience with operation of the Monk Hill wells, it will not take days or weeks to purge this level of chlorinination. |

| | | |
|---|---|---|
| 36 | **5.3.4 Utility Water Treatment:** Please explain the rationale of going through the time, effort and expense of disinfecting these wells and not immediately putting them into service. | As discussed above, well startup will be completed only once each year under the proposed full capacity system operating strategy. |
| 37 | **5.3.4 Utility Water Treatment:** The practice of running chlorinated water through GAC beds is generally discouraged. In addition to the possible embrittlement and generation of carbon fines, even if the chlorine residual is down to 1.25 mg/L entering the carbon, that is still about 200 times more than the anticipated VOC loading. The chlorine may take up many adsorbtion sites and shorten the carbon bed life. | Purge water produced during annual well startup requires treatment prior to being discharged in the Arroyo Seco. Because of the high flow rates generated from the production wells, the most cost effective method for treatment is use of the MHTS. The period of time that the GAC beds will be exposed to the elevated residual chlorine levels is limited to one occurrence per year under the full capacity operating strategy. Calgon has indicated that the anticipated residual chlorine levels and limited time of exposure should not adversely impact the GAC beds. |
| 38 | **5.3.6 Extended System Shutdown:** Even with only the Arroyo well running (2200 gpm), that should be enough flow for all the vessels to stay online. | Under the proposed full capacity operating strategy, it is anticipated that the production wells will be operational for approximately 6 months of the year. The production wells will be operated at full flow (7,000 gpm) until all allotted water has been pumped, and then the system will be shut down until the following year. |
| 39 | **5.3.7 Preventive Maintenance** This should include testing and alignment of rotating equipment, and periodic calibration and maintenance of instrumentation such as pressure differential elements and flow meters, as recommended by the respective manufacturer. | Testing and alignment of rotating equipment, and periodic calibration and maintenance of instrumentation such as pressure differential elements and flow meters, as recommended by the respective manufacturer has been added to Section 5.3.7. |
| 40 | **5.3.7 Preventive Maintenance** Especially during the first half dozen years, vessel linings should be inspected carefully, including spark testing, according to the lining manufacturer. | Section 5.3.7 has been revised to indicate that vessel linings should be inspected carefully, including spark testing, according to the lining manufacturer recommendations. |
| 41 | **5.4 System Monitoring:** What instrumentation will be tied in to the City's SCADA system? What about local and remote alarms? | The attached table (new Table 2-3 in the RD/RA Work Plan) summarizes the proposed instrumentation and alarms for the MHTS. |

| | | |
|---|---|---|
| 42 | **5.4 System Monitoring (Table 5-3):**<br>A. VOCs and perchlorate have to be confirmed for compliance weekly in the combined effluent.<br>B. If 1,2,3-TCP is ND in the wells, then it does not need to be tested for in the rest of the plant. If it is found in any of the wells, then analyze for it weekly in the combined effluent, and individual lead GAC vessels on a schedule set in the DPH permit.<br>C. The wells have to be tested for coliforms and HPC monthly.<br>D. VOCs shall be analyzed by GC/MS method 624.2 and all TICs and unknown peaks, other than instrument artifacts, shall be reported by the lab.<br>E. 1,2,3-TCP analysis shall report at least down to 5 ng/L using a method approved by the DPH. | Table 5-3 has been revised to address the comments regarding sampling frequency. |
| 43 | **5.6 System Optimization and Exit Strategy:** The first sentence of the second paragraph states that it is anticipated that the response action will "restore the use of municipal drinking water wells, . . ." It should be further clarified that this means that the great proportion of the water produced from the Pasadena wells will, indeed, be treated and can be introduced into the Windsor Reservoir, as opposed to treatment and return to the Arroyo Seco spreading grounds. | Section 5.6 has been revised to indicate that optimization strategies will ensure that a great proportion of the water produced from the production wells will be treated for drinking water use and not discharged to the Arroyo Seco. |
| 44 | **5.6 System Optimization and Exit Strategy:** DPH will also be evaluating the plant's ability to safely and reliably produce potable water for the Windsor Reservoir.<br><br>This ties in to the second bullet of the first paragraph, remediation effectiveness. In addition to evaluating only the mass of contaminant removed from the aquifer and plume containment, the remedy should also be evaluated as to its on-line percentage, i.e., the percentage of time that the plant is able to discharge to the Windsor Reservoir, which should be a third performance objective. | Section 5.6 has been revised to indicate that the remedy will be evaluated as to its on-line percentage and ability to safely and reliably produce drinking water for the Windsor Reservoir. |

| | | |
|---|---|---|
| 45 | **5.6 System Optimization and Exit Strategy:** For purposes of the DPH permits applied to extremely impaired sources, such as CERCLA cleanups, as we have stated previously, the permit will require the treated combined effluent to be significantly below MCLs, typically non-detect or below DLRs (Detection Limit for Reporting Purposes). Specific levels for effluent compliance and in-plant levels for operational goals will be specified in the DPH permit amendment, considering technical and economic feasibility and typical laboratory capabilities. | Comment noted. All effluent limits set by DPH in the operating permit will be achieved through treatment at the MHTS. |
| 46 | **Disinfection Facilities:**<br><br>A. Drawing PID-102 shows the sample point location for the chlorine analyzer before the static mixer. Drawing C-102 shows the sample point before the mixer.<br>B. PID-102 also shows a "monochloramine" sample point after ammonia injection. C-102 shows an "ammonia sample connection" and an ammonia analyzer.<br>C. The ammonia sample line length and diameter of 2 inches may result in long lag times before the analyzer can read the sample. Can the sample time be reduced? | A. PID-102 was inaccurate and has been updated.<br><br>B. The intent of this comment is unclear.<br><br>C. The ammonia sample line is ¼-inch tubing installed inside of a 2-inch sleeve. Sample times should not be an issue while drawing from this size of tubing. |