# APPENDIX A
## Production Well Boring Logs

# PASADENA WATER DEPARTMENT
## WELL ARROYO NO. 25

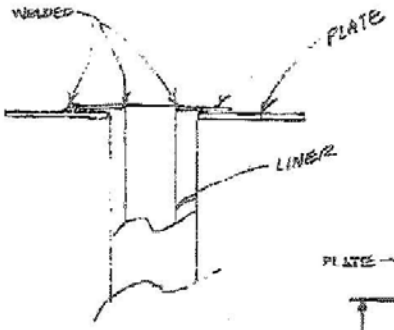


LINER DETAIL

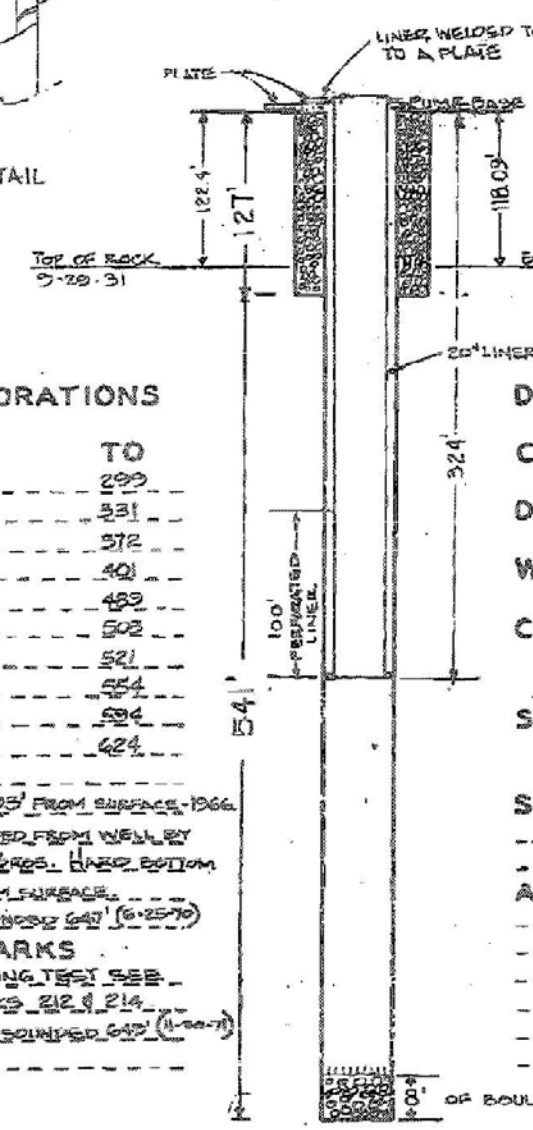


324' OF NEW 20" LINER INSTALLED 10/75. BOTTOM 100 FEET PERFORATED.

CASING EXTENDED AND SHAFT FILLED WITH GRAVEL - 1967. WELL LINED - 10/75.

OF BOULDERS ADDED WHEN WELL WAS DRILLED.

### PERFORATIONS

| FROM | TO |
|---|---|
| 127 | 299 |
| 306 | 331 |
| 367 | 372 |
| 393 | 401 |
| 457 | 489 |
| 498 | 503 |
| 508 | 521 |
| 538 | 554 |
| 568 | 594 |
| 598 | 624 |

SAND @ 593' FROM SURFACE - 1966.
SAND REMOVED FROM WELL BY SAUNDERS BROS. HARD BOTTOM @ 658' FROM SURFACE.
BOTTOM SOUNDED 647' (6-25-70)

### REMARKS

FOR PLUMBING TEST SEE FIELD BOOKS 212 & 214
BOTTOM SOUNDED 643' (11-30-71)

### WELL

DRILLED BY Roscoe Moss Co.

CONTRACT NO. Inf. 63

DATE August 1930

WORK ORDER 2511

CASING 26 IN NO. 8 GUAGE

STARTER: LENGTH 30'; PLY 4; GUAGE 8

SHOE 26" X [illegible]"

ALTERATIONS

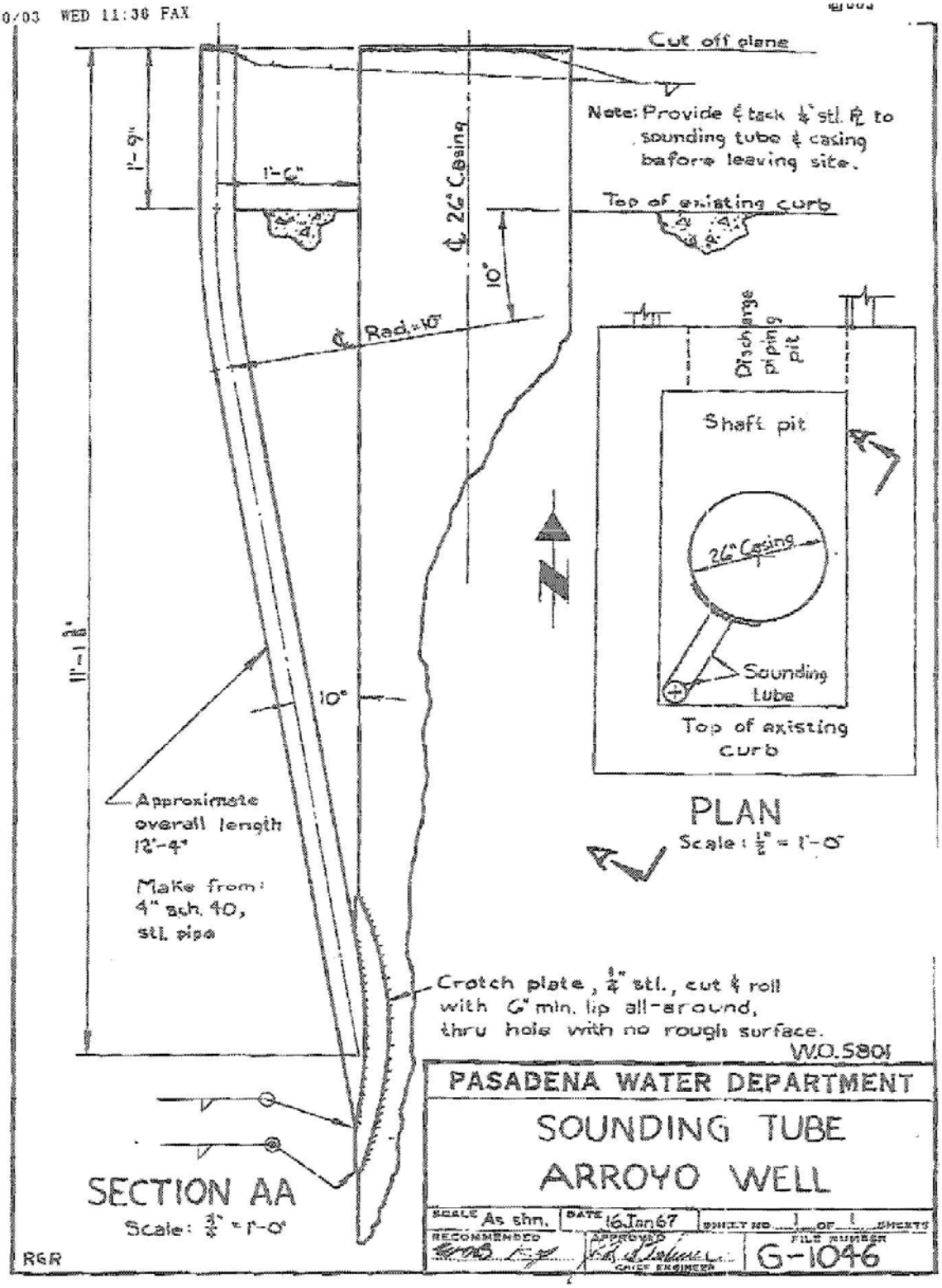
Cut off plane
Note: Provide & tack ¼" stl. PL to sounding tube & casing before leaving site.
Top of existing curb
1'-9"
1'-6"
℄ 26" Casing
10°
℄ Rad.=10'
11'-1½"
10°
Approximate overall length 12'-4"
Make from: 4" sch. 40, stl. pipe
Crotch plate, ¼" stl., cut & roll with 6" min. lip all-around, thru hole with no rough surface.
Discharge piping pit
Shaft pit
26" Casing
Sounding tube
Top of existing curb
PLAN
Scale: ½" = 1'-0"
SECTION AA
Scale: ¾" = 1'-0"
RGR
W.O. 5801
PASADENA WATER DEPARTMENT
SOUNDING TUBE
ARROYO WELL
SCALE As shn.
DATE 16 Jan 67
SHEET NO. 1 OF 1 SHEETS
RECOMMENDED
APPROVED
CHIEF ENGINEER
FILE NUMBER
G-1046

# PASADENA WATER DEPARTMENT
## WELL NO. 52

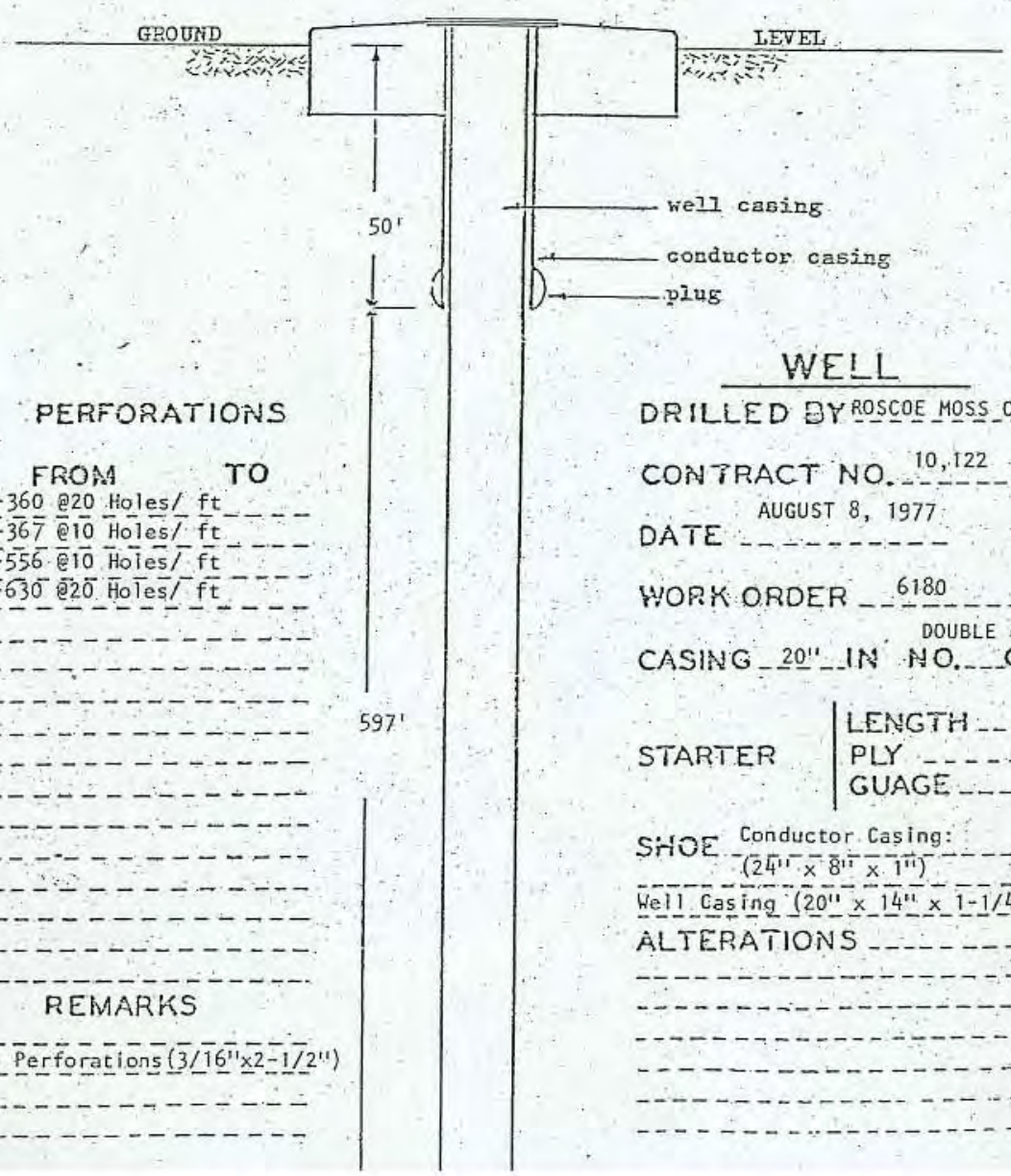


### PERFORATIONS

| FROM | TO | |
|---|---|---|
| 250 | 360 | @20 Holes/ ft |
| 360 | 367 | @10 Holes/ ft |
| 372 | 556 | @10 Holes/ ft |
| 556 | 630 | @20 Holes/ ft |

### REMARKS

Size Perforations (3/16"x2-1/2")

### WELL

DRILLED BY ROSCOE MOSS COMPANY

CONTRACT NO. 10,122

DATE AUGUST 8, 1977

WORK ORDER 6180

CASING 20" IN NO. DOUBLE 8 GUAGE

STARTER
- LENGTH 23'
- PLY 3
- GUAGE 8'

SHOE Conductor Casing: (24" x 8" x 1")

Well Casing (20" x 14" x 1-1/4")

ALTERATIONS

PASADENA WATER DIVISION

WELL VENTURA NO. 21

Depth to Sand

| Date | Depth |
|---|---|
| 11/65 | 426 |
| 11/66 | 429 |
| 3/71 | 419 |
| 7/71 | 424 |
| 12/71 | 473 |

Floor Level

473'

PERFORATIONS

| FROM | TO |
|---|---|
| 102 | 141 |
| 164 | 218 |
| 241 | 311 |
| 410 | 468 |

REMARKS

(1) Casing leaks bigger than double 8

WELL

DRILLED BY Roscoe Moss Co.

CONTRACT NO. 1034

DATE 4/25/1924

WORK ORDER 1390

CASING 26 IN NO. 8 (1) GUAGE

STARTER: LENGTH 30' PLY Double 1/4" GUAGE

SHOE 26" x 18" x 1 1/2"

ALTERATIONS

# PASADENA WATER DEPARTMENT

WELL WINDSOR NO. 48

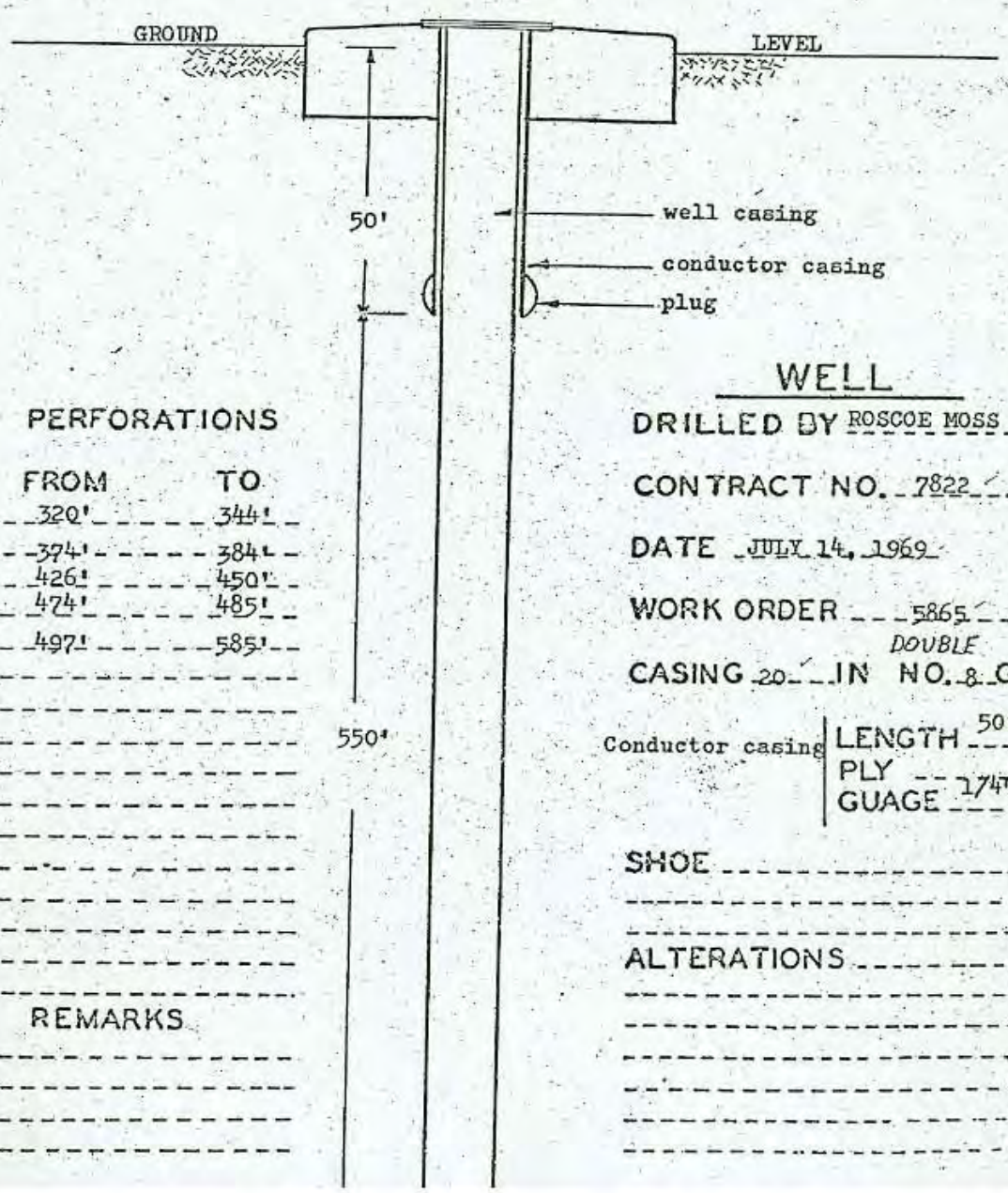


## PERFORATIONS

| FROM | TO |
|---|---|
| 320' | 344' |
| 374' | 384' |
| 426' | 450' |
| 474' | 485' |
| 497' | 585' |

REMARKS

## WELL

DRILLED BY ROSCOE MOSS CO.

CONTRACT NO. 7822

DATE JULY 14, 1969

WORK ORDER 5865

CASING 20" IN DOUBLE NO. 8 GUAGE

Conductor casing
LENGTH 50'
PLY
GUAGE 174"

SHOE

ALTERATIONS

# APPENDIX B
# Pipeline Inspection and Testing Report

**General Civil, Municipal, Water and Wastewater Engineering, Planning,**
**Construction Management and Surveying**
**Monrovia Prescott Phoenix Kingman**

February 05, 2008

Battelle Institute
Jet Propulsion Laboratory
4800 Oak Grove Drive Building 180, Room 8008
Pasadena, CA 91109

Attention: Carolyn Scala

Subject: Monk Hill Treatment System CCTV Pipeline Investigation-Rev1

Dear Ms Scala:

***Background***

***CIVILTEC engineering, inc.*** (***Civiltec***) has performed and completed a review of the Closed Circuit Television (CCTV) videos on the Monk Hill Treatment System. The videos were captured in order to assess the condition of the existing pipelines and determine if they will be suitable for continued use. There are six (6) existing pipes a 12-inch Transite, 12-inch Ductile Iron, 12-inch Steel, 16-inch Steel, 24-inch Cast Iron and 30-inch Hume. Overall the pipes are in good condition; however there are a few segments within some of the pipe alignments that will require some attention; please refer to Exhibit A for details on specific sections.

***12" Transite Pipe (ACP)***

This segment of pipe extends approximately 163' from the intersection of Ventura Street and Windsor Ave. The video log (m0101008) indicated that the pipe length was generally in good repair. This pipe serves as the final segment of pipe that connects the Windsor well to the sump located near the Ventura Well. It is recommended to pressure test this segment of pipe per the procedures set forth in the Pressure Testing Work Plan.

***12" Ductile Iron Pipe (DIP)***

DIP connects the ACP pipe described previously to the Windsor Well. The pipe alignment is generally situated on the eastern side of Windsor Ave, entering the Windsor reservoir site at its north western corner. The pipe is approximately 996' long. Video logs BETTELLE-JPL.mpg, ___071707_1431.mpg, m101009.mpg, and OPEN CUT_UP STRM__120307_1139.mpg signify that the pipe is generally good condition. Video m101009.mpg revealed that a segment of the pipe alignment at Station 46'-00" had become disjointed. PWP confirmed that this condition was normal, due to the transition from PVC to DIP at this location. The remaining portions of pipe appeared to be in good repair and should be pressure tested.

***16" Steel Pipe Post Sump***

This stretch of 16-inch pipe is in good condition. Video logs for this pipe are as follows; MPEG_A_11012007_2_6i, MPEG_A_11012007_1154_4_13i, 16inNORTH_OPEN TRENCH__072007_1002, 16inSOUTH_OPEN TRENCH__072007_1008, SOUTH 730' FROM WELL 52 and ___071707_1006. The pipe extends from the sand box of the Windsor reservoir approximately 1,175' to the sump located adjacent to the Ventura well.

A portion of this pipe will be utilized as the main feed to the monk hill treatment system (MHTS). The remaining portions specifically video segments listed under the following file names will not be utilized.

- 16inSOUTH_OPEN TRENCH__072007_1008,
- ___071707_1006.

This segment of pipe is approximately 215' in length. It is recommended that this pipe segment be capped and abandoned in place in accordance with Pasadena Water and Power (PWP) requirements. Pipe that will serve as the main feed to the MHTS should be pressure tested.

***16" Steel & 12" Steel Pipe Pre Sump***

These two pipe segments connect the Arroyo well to the far north and Well #52 to the sump located near the Ventura Well. Generally the 12" pipe extends from the Arroyo well to Well #52. The 16" pipe segment combines the flow from both wells and discharges it to the sump. The entire length of pipe is approximately 1486' long. Of that length approximately 1,136' was video logged. Video logs for this pipe are named as follows;

- open_cut_south__071207_1025,
- north_cont__071207_1164,
- north_after_wash__071207_1142,
- 16ineast,
- 16inwest,
- jpl.
- North Slope (01)
- North Slope (02)

Pipe segments represented in files 16inwest and jpl are in very poor condition and will need to be replaced. This constitutes approximately 42' of 12" pipe. The remaining portions of pipe appear to be in good repair. This pipe will direct flow from the Arroyo well and Well # 52 to the sump. As this pipe does not show severe signs of deterioration, considering its low pressure operation, and relative proximity of use (5 years ago) it is recommended that pipe operation be monitored. Subsequent video analysis performed on these pipe segments will detail whether additional measured need to be taken on this pipe.

***30" Hume Line***

A segment of the existing 30" hume line extends from the sand box of the Windsor Reservoir to the Arroyo well. The alignment of the pipe generally follows Windsor Avenue down the access road to the JPL east campus parking lot. The line will ultimately be modified to discharge water

from the MHTS to spreading basin no. 5. The pipe generally is in good repair and it is expected that the pipe will operate under low pressure or gravity conditions. The pipe segment being analyzed for use in conjunction with the MHTS is approximately 2,504' in length. Approximately 2080' of this pipe was video logged. The file names of the video segments of this pipe are as follows:

- UP STRM STAT_DWN STRM STA__111307_0758,
- ___071707_1250.

The videos did not indicate serious pipe problems. It is recommended that the pipe be monitored during operation.

***24" Cast Iron***

The cast iron lines were generally observed to be in poor condition. It is recommended that these lines be pressure tested.

***Conclusion***

Please contact Mr. Shem Hawes if you should have any question at (626) 357-0588 or by way of e-mail at shawes@civiltec.com.

Very truly yours,

***CIVILTEC engineering, inc.***

C. Shem Hawes, P.E.
Project Manager

Battelle Institute
Carolyn Scala
Monk Hill Treatment System CCTV Pipeline Investigation
January 25, 2007
Exhibit A

Exhibit A

| File Name | Pipe Material | Pipe Size (in) | Start Station ID | End Station ID | Start Station/Time | End Station/Time | Pipe Station/Time | Pipe Station Comments | Recommendations |
|---|---|---|---|---|---|---|---|---|---|
| MPEG_A_11012007_2_6i | STL | 16 | C | D | 0'-00" | 465'-01" | 379'-04" | Coating Defects. No visible Steel. | Pressure test to determine pipe integrity |
| MPEG_A_11012007_1154_4_13i | STL | 16 | | | 0'-00" | 93'-0" | | Video segment does not describe pipe location type or size. | Pressure test to determine pipe integrity |
| MPEG_A_11012007_0912_1_1i | STL | 16 | A | B | 0'-00" | 18'02" | 14'04" | Connector Pipe Corroded | Pressure test to determine pipe integrity |
| MPEG_A_11012007_0912_1_1i | STL | 16 | A | B | 0'-00" | 18'02" | 12'10" | Concrete lining chipped at certain locations | Pressure test to determine pipe integrity |
| | | | | | | | | | |
| OPENING_EAST__112107_0908 | ACP | 12 | | | 0'-00" | 2'-0" | | Staging only no video taken | |
| | | | | | | | | | |
| OPENING_WEST__112107_0859 | ACP | 12 | MH Opening | MH West | 0'-00" | 27'-09" | 13'-09" | Coating Defects. | Pressure test to determine pipe integrity |
| OPENING_WEST__112107_0859 | ACP | 12 | MH Opening | MH West | 0'-00" | 27'-09" | 27'-01" | Apx 1 foot section extremely deteriorated. | Pressure test to determine pipe integrity |
| | | | | | | | | | |
| RESEVOIR_BTTRFL VALVE__112107_0753 | Cast iron | 24 | Reservoir | Butterfly | 0'-00" | 64'-03" | | Majority of the pipe has Rust and some deterioration | Pressure test to determine pipe integrity |
| | | | | | | | | | |
| UP STRM STAT_DWN STRM STA__111307_0758 | Hume | 30 | Up Stream | Down Stream | 5'-05" | 1372'-07" | 52'-08" | Small Defect at the top of pipe | Monitor Pipe During operation |
| UP STRM STAT_DWN STRM STA__111307_0758 | Hume | 30 | Up Stream | Down Stream | 5'-05" | 1372'-07" | 179'-08" | Lateral Pipe Corroded. | Monitor Pipe During operation |
| UP STRM STAT_DWN STRM STA__111307_0758 | Hume | 30 | Up Stream | Down Stream | 5'-05" | 1372'-07" | 463'-05" | Fine Roots inside pipe, Approx 30' | Monitor Pipe During operation |
| UP STRM STAT_DWN STRM STA__111307_0758 | Hume | 30 | Up Stream | Down Stream | 5'-05" | 1372'-07" | 476'-01" | Large Root throught seal | Monitor Pipe During operation |
| UP STRM STAT_DWN STRM STA__111307_0758 | Hume | 30 | Up Stream | Down Stream | 5'-05" | 1372'-07" | 508'-00" | Fine Roots inside pipe | Monitor Pipe During operation |
| UP STRM STAT_DWN STRM STA__111307_0758 | Hume | 30 | Up Stream | Down Stream | 5'-05" | 1372'-07" | 534'-00" | Roots Through Seal | Monitor Pipe During operation |
| UP STRM STAT_DWN STRM STA__111307_0758 | Hume | 30 | Up Stream | Down Stream | 5'-05" | 1372'-07" | 783'-08" | Deformation in Pipe | Monitor Pipe During operation |
| | | | | | | | | | |
| ___071707_0936 | Ductile Iron | 12 | Pump Station | Ukn | 0'-00" | 330'-01" | 329'-05" | Deterioration of Pipe | Pressure test to determine pipe integrity |
| | | | | | | | | | |
| ___071707_1006 | STL | 16 | Pumpstation | Valve | 8'-00" | 74'-07" | 62'-07" | Disfiguration. | Pressure test to determine pipe integrity |
| | | | | | | | | | |
| ___071707_1250 | Hume | 30 | Pumpstation | Ukn | 8'-00" | 708'-01" | 17'-05" | Chunk of Pipe wall missing. | Monitor Pipe During operation |
| ___071707_1250 | Hume | 30 | Pumpstation | Ukn | 8'-00" | 708'-01" | 387'-00" | Pipe Corroded/Deteriorated from beginning to 387' | Monitor Pipe During operation |
| | Hume | 30 | Pumpstation | Ukn | 8'-00" | 708'-01" | 400'-5" | Prefabed Stub | Monitor Pipe During operation |
| ___071707_1250 | Hume | 30 | Pumpstation | Ukn | 8'-00" | 708'-01" | | End Due to Plug in Pipe | Plug Has Been Removed |
| | | | | | | | | | |
| ___071707_1431 | Ductile Iron | 12 | Pumpstation | Ukn | 10'-00" | 331'-03" | 330'-02" | Pipe Deteriorated. | Pressure test to determine pipe integrity |
| | | | | | | | | | |
| 16inNORTH_OPEN TRENCH__072007_1002 | STL | 16 | North Open Trench | | 7'-00" | 93'-11" | 17'-04" | Disfiguration in Pipe | Abandon pipe segment. |
| 16inNORTH_OPEN TRENCH__072007_1002 | STL | 16 | North Open Trench | | 7'-00" | 93'-11" | 23'-11" | Grout Splatter at Joint | Abandon pipe segment. |
| 16inNORTH_OPEN TRENCH__072007_1002 | STL | 16 | North Open Trench | | 7'-00" | 93'-11" | 34'-10" | Defect at top of Pipe | Abandon pipe segment. |
| | | | | | | | | | |
| 16inSOUTH_OPEN TRENCH__072007_1008 | STL | 16 | South Open Trench | | 7'-00" | 144'-10" | 106'-00" | Begin Crack in top of pipe | Abandon pipe segment. |
| 16inSOUTH_OPEN TRENCH__072007_1008 | STL | 16 | South Open Trench | | 7'-00" | 144'-10" | 120'-00" | End Crack in top of pipe | Abandon pipe segment. |
| | | | | | | | | | |
| 24inNORTH_IN BUILDING__072007_1039 | Cast Iron | 24 | North In Building | | 0'-00" | 50'-0"" | Total | Pipe Severely Corroded/Deteriorated | Pressure test to determine pipe integrity |
| | | | | | | | | | |
| 12LINE_TOPSIDE__072007_0925 | Ukn | 12 | Top Side | | 7'-00" | 271'-10" | | Pipe Integrity looks good. | No Recommendation |
| | | | | | | | | | |
| 16ineast | STL | 12 | East | | 5'-00" | 43'-00" | 39'-00" | Minor corrosion | No Recommendation |
| | | | | | | | | | |
| 16inwest | STL | 12 | West | | 0'-00" | 34'-00" | | Majority of pipe deteriorated | Replace or Abandon entire pipe segment. |
| | | | | | | | | | |
| jpl | STL | 12 | Pump Station | | 0'-00" | 8'-00" | Total | Majority of Pipe rusted/deteriorated. | Replace or Abandon entire pipe segment. |
| | | | | | | | | | |
| m0101004 | Ukn | Ukn | 0 min | 10min | 0'-00" | 31'-00" | 9'-00" | Section of pipe deteriorated | No Recommendations |
| m0101004 | Ukn | Ukn | 10min | 22min | 0'-00" | 55'-00" | | | |
| | | | | | | | | | |
| m101008 | | Ukn | | | 0'-00" | 153'-00" | 26'-00" | Section of pipe (elbow) deteriorated | No recommendations |
| | | | | | | | | | |
| m101009 | ACP | 12 | Opening Heading East | | 0'-00" | | 46'-00" | Uneven Section at Joint, Downstream section appears to have shifted | Typical PVC to DIP Joint |
| | | | | | | | | | |

| File Name | Pipe Material | Pipe Size (in) | Start Station ID | End Station ID | Start Station/Time | End Station/Time | Pipe Station/Time | Pipe Station Comments | Recommendations |
|---|---|---|---|---|---|---|---|---|---|
| OPEN CUT_UP STRM__120307_1139 | DIP | 12 | Open Cut | Up Strm | 0'-00" | 193'-02" | | Pipe Integrity looks good. | |
| | | | | | | | | | |
| BETTELLE-JPL | DIP | 12 | | | 0'-00" | 318'-00" | | Pipe Integrity looks good. | |
| | | | | | | | | | |
| north_after_wash__071207_1142 | STL | 12 | | | 0'-00" | 92'-06" | 17'-00" | Deterioration of the WYE | Monitor Operation |
| north_after_wash__071207_1143 | STL | 12 | | | 0'-00" | 92'-06" | 57'-11" | Disfiguration of the Joint. Stub out corroded. | Monitor Operation |
| north_after_wash__071207_1144 | STL | 12 | | | 0'-00" | 92'-06" | 83'-02" | Stub out corroded. | Monitor Operation |
| north_after_wash__071207_1145 | STL | 12 | | | 0'-00" | 92'-06" | 87'-04" | Deterioration of T-intersection | Monitor Operation |
| | | | | | | | | | |
| north_cont__071207_1156 | STL | 12 | | | 92'-06" | 531'-05" | 92'-06" | Corrosion of pipe around valve joints. | Monitor Operation |
| north_cont__071207_1157 | STL | 12 | | | 92'-06" | 531'-05" | 132'-08"-140'-11" | Discoloration of pipe. | Monitor Operation |
| north_cont__071207_1158 | STL | 12 | | | 92'-06" | 531'-05" | 145'-05"-184'-11" | Discoloration of pipe. | Monitor Operation |
| north_cont__071207_1159 | STL | 12 | | | 92'-06" | 531'-05" | 218'-00"-232'-00" | Discoloration of pipe | Monitor Operation |
| north_cont__071207_1160 | STL | 12 | | | 92'-06" | 531'-05" | 320'-00"-328'-00" | Discoloration of pipe | Monitor Operation |
| north_cont__071207_1161 | STL | 12 | | | 92'-06" | 531'-05" | 343'-10" | Discoloration of pipe | Monitor Operation |
| north_cont__071207_1162 | STL | 12 | | | 92'-06" | 531'-05" | 373'-00"-383'-00" | Discoloration of pipe | Monitor Operation |
| north_cont__071207_1163 | STL | 12 | | | 92'-06" | 531'-05" | 403'-00"-420'-00" | Discoloration of pipe | Monitor Operation |
| north_cont__071207_1164 | STL | 12 | | | 92'-06" | 531'-05" | 426'-00" | Discoloration of pipe | Monitor Operation |
| | | | | | | | | | |
| open_cut_south__071207_1025 | STL | 12 | | | 0'-00" | 605'-05" | | Pipe Integrity looks good. | Monitor Operation |
| | | | | | | | | | |
| North Slope (01) | STL | 12 | | | 0:00 | 1:04:45 | 12:20 | Discoloration of Pipe | Monitor Operation |
| North Slope (01) | STL | 12 | | | 0:00 | 1:04:45 | 19:27 | Discoloration of Pipe | Monitor Operation |
| North Slope (01) | STL | 12 | | | 0:00 | 1:04:45 | 30:47:00 | Discoloration of Pipe | Monitor Operation |
| North Slope (01) | STL | 12 | | | 0:00 | 1:04:45 | 33:05:00 | Discoloration of Pipe | Monitor Operation |
| North Slope (01) | STL | 12 | | | 0:00 | 1:04:45 | 33:29:00 | Discoloration of Pipe | Monitor Operation |
| | | | | | | | | | |
| North Slope (02) | STL | 12 | | | 0:00 | 55:16:00 | | | |
| | | | | | | | | | |
| South 730' From Well 52 | STL | 16 | | | 0:00 | 50:01:00 | 35:51:00 | Hole in pipe. Looks to be a small diameter "wye". | Monitor Operation |
| South 730' From Well 52 | STL | 16 | | | 0:00 | 50:01:00 | 43:07:00 | Continuing Pipe Severely Deteriorated | Monitor Operation |

Pressure Testing Work Plan Ventura Sump Discharge Line

Date ~~4/18/08~~ 4/23/08

| | | | | |
|---|---|---|---|---|
| Pipe Size (in) | 16 | | Testing Standard | M11 |
| Pipe Material | STL | | Test Pressure (psi)[a] | 128 |
| Pipe Length (ft) | 1100 | | Allowable leakage (gal) | 6.94 |
| Operating Pressure (psi) | 95 | | Test Length (hr) | 2 |
| Reservoir Volume (gal) | | | | |
| Reservoir Dimension (ftxft) | 15' R 17" H | | | |
| Test Location | | | | |

| Time | Pressure | Water Level (in)* | Comments |
|---|---|---|---|
| 9:45 | 130 | 17 | TESTING STARTS |
| 9:55 | 130 | 17 | |
| 10: ~~xxx~~ 05 | 130 | 17 | |
| 10: 15 | 130 | 17 | |
| 10: 25 | 130 | 16.5 | |
| 10: 35 | 130 | 16.5 | |
| 10: 45 | 130 | 16.0 | |
| 10: 55 | 130 | 16.0 | |
| 11: 05 | 130 | 16.0 | |
| 11: 15 | 130 | 16.0 | |
| 11: 25 | 130 | 16.00 | |
| 11: 35 | 130 | 16.0 | |
| 11: 45 | 130 | 16 | |
| | | | DS |
| | | | PASS |

[a]Make up water is to be added at +/- 2 psi of test pressure

*Water level is inches above reservoir bottom

LEAK ON BUCKET

Pressure Testing Work Plan Ventura Sump Discharge Line
Date 4/18/08

| | | | |
|---|---|---|---|
| Pipe Size (in) | 16 | Testing Standard | M11 |
| Pipe Material | STL | Test Pressure (psi)[a] | 128 |
| Pipe Length (ft) | 1100 | Allowable leakage (gal) | 6.94 |
| Operating Pressure (psi) | 95 | Test Length (hr) | 2 |
| Reservoir Volume (gal) | 2 ft³ = 14.96 gal | | |
| Reservoir Dimension (ftxft) | 16"Ø X 165" = .87 gal/in | | |
| Test Location | | | |

| Time | Pressure | Water Level (in)* | Comments |
|---|---|---|---|
| 9:31 | 130 | 16 | |
| 9:42 | 128 | 16 | |
| 9:51 | 128 | 16 | |
| 9:53 | 125 | 16 | > 4" x .87 gal/in = 3.48 |
| 9:55 | 129 | 12 | |
| 9:56 | 129 | 16 | |
| 10:02 | 129 | 16 | |
| 10:08 | 128 | 15.25 | > 5" x .87 gal/in = 4.35 |
| 10:09 | 130 | 10.25 | |
| 10:11 | 130 | 16.25 | |
| 10:17 | 129 | 15.75 | |
| 10:25 | 127 | 15 | |
| 10:28 | 125 | 14.9 | |
| 10:29 | 125 | 14 | > 5" x .87 gal/in = 4.35 |
| 10:29 | 130 | 9 | |
| 10:29 | 130 | 16 | 12.2 gal |
| 10:45 | 128 | 16 | |
| 10:52 | 123 | 16 | 12.2 gal/hr >> 3.5 gal/hr |
| | | | ∴ PIPE DOES |
| | | | NOT PASS |
| | | | GM 4/18/08 |

[a]Make up water is to be added at +/- 2 psi of test pressure

*Water level is inches above reservoir bottom

Pressure Testing Work Plan Windsor Well Discharge Line
Date 4/18/08

| | | | |
|---|---|---|---|
| Pipe Size (in) | 12 | Testing Standard | AWWA C600 |
| Pipe Material | DIP | Test Pressure (psi)[a] | 150 |
| Pipe Length (ft) | 255 | Allowable leakage (gal/hr) | 0.25 |
| Operating Pressure (psi) | 100 | Test Length (hr) | 2 |
| Reservoir Volume ~~(gal)~~ LITER 2.5 | | | |
| Reservoir Dimension (ftxft) | | | |
| Test Location | | | |

| Time | (psi) Pressure | Water Level ~~(in)~~ L* | Comments |
|---|---|---|---|
| 9:10:30 | 150 | 2.84 | TEST BEGINS |
| 9:25:00 | 150 | 2.54 | |
| 9:45:00 | 145 | 2.4 >1.4 | START PUMP |
| 9:46 | 148 | 1.0 | 2.6 L = .69 gal |
| 9:47 | 148 | 3.0 >1.2 | |
| 9:48 | 150 | 1.8 | |
| 9:52 | 150 | 1.8 | SLIGHT LEAK IN CAP @ WELDED COUPLING |
| 10:15 | 150 | 1.8 | NEAR WINDSOR WELL |
| 10:24 | 149 | 1.8 | NO ACTION |
| 10:35 | 147 | 1.8 | |
| 10:45 | 147 | 1.8 | |
| 11:00 | 147 | 1.8 | |
| ~~11:10~~ | | | |
| 11:11 | 147 | 1.8 | END TEST |
| | | | PASS |
| | | | GAH 04/18/08 |

[a]Make up water is to be added at +/- 5 psi of test pressure

~~*Water level is inches above reservoir bottom~~

# APPENDIX C
# Windsor Well Layout Evaluation

# Technical Memorandum

## Evaluation for Operating Scenarios for the Windsor Well, City of Pasadena Monk Hill Treatment System

**National Aeronautics and Space Administration, Jet Propulsion Laboratory, Pasadena, California**

*Draft* April 2008

### INTRODUCTION

This technical memorandum provides a cost analysis for two potential operating scenarios associated with the Windsor Well. The Windsor Well, located on the Windsor Reservoir site, is one of four existing production wells that would supply water to the proposed City of Pasadena Monk Hill Treatment System (MHTS), which is currently in the design and permitting stage. The proposed MHTS would remove volatile organic compounds (VOCs) and perchlorate from groundwater extracted from the production wells[1] and would be implemented as a remedial action under the Comprehensive Environmental Response, Compensation, and Liability Act (CERCLA) program at the National Aeronautics and Space Administration's (NASA's) Jet Propulsion Laboratory (JPL).

The initial design utilizes the existing pipeline, which directs extracted groundwater from the Windsor Well downhill to the former air stripping system sump. At the sump, groundwater from Windsor Well would be combined with groundwater extracted from three other wells and pumped back uphill to the MHTS. An analysis was performed to evaluate whether it would be more cost-effective to pump groundwater from the Windsor Well directly to the MHTS.

### SUMMARY OF RECOMMENDATIONS AND CONCLUSIONS

Based on the cost analysis documented in this technical memorandum, *it is recommended that the initial MHTS design be modified so that Windsor Well pumps directly to the treatment system*. While additional capital costs (as much as $327,000) may be incurred with this approach, power savings would result in an estimated payback timeframe of 4 to 7 years.

### CAPITAL COST EVALUATION OF WINDSOR WELL SCENARIOS

Windsor Well is located adjacent to the Windsor Reservoir. Figure 1 shows the locations of the production wells, sump and booster pumps, proposed MHTS location, and the Windsor Reservoir. The initial design involves pumping 1,400 gallons per minute (gpm) of water from Windsor Well through the existing pipeline to the sump, located 1,500 feet away and at an elevation of approximately 75 feet lower. Three booster pumps sized at 350 horsepower each are included in the initial design to pump water through the MHTS and into the Windsor Reservoir. The estimated booster pump station capital cost is $1,359,300.

If groundwater from Windsor Well is pumped directly to the MHTS, bypassing the sump, the maximum flow rate requirement of the booster pumps would be reduced from 7,000 gpm to 5,600 gpm. In this case, 300 horsepower booster pumps would be required instead of 350 horsepower, and there would be less friction loss in the 16-inch pipe (pipe efficiency improves from 71% to 80% under maximum flow conditions) resulting in a significant decrease in the energy demand of the booster pumps. However, under this scenario, a larger pump would be required at the Windsor Well and possibly a unit to remove particulates from the groundwater. The estimated capital cost for installing a new well pump in Windsor Well, and three smaller (300 horsepower) booster pumps is $1,686,300.

[1] NASA. 2007. *Final Interim Record of Decision for Operable Unit 3, Off-Facility Groundwater*. National Aeronautics and Space Administration, Jet Propulsion Laboratory, Pasadena, CA. August.

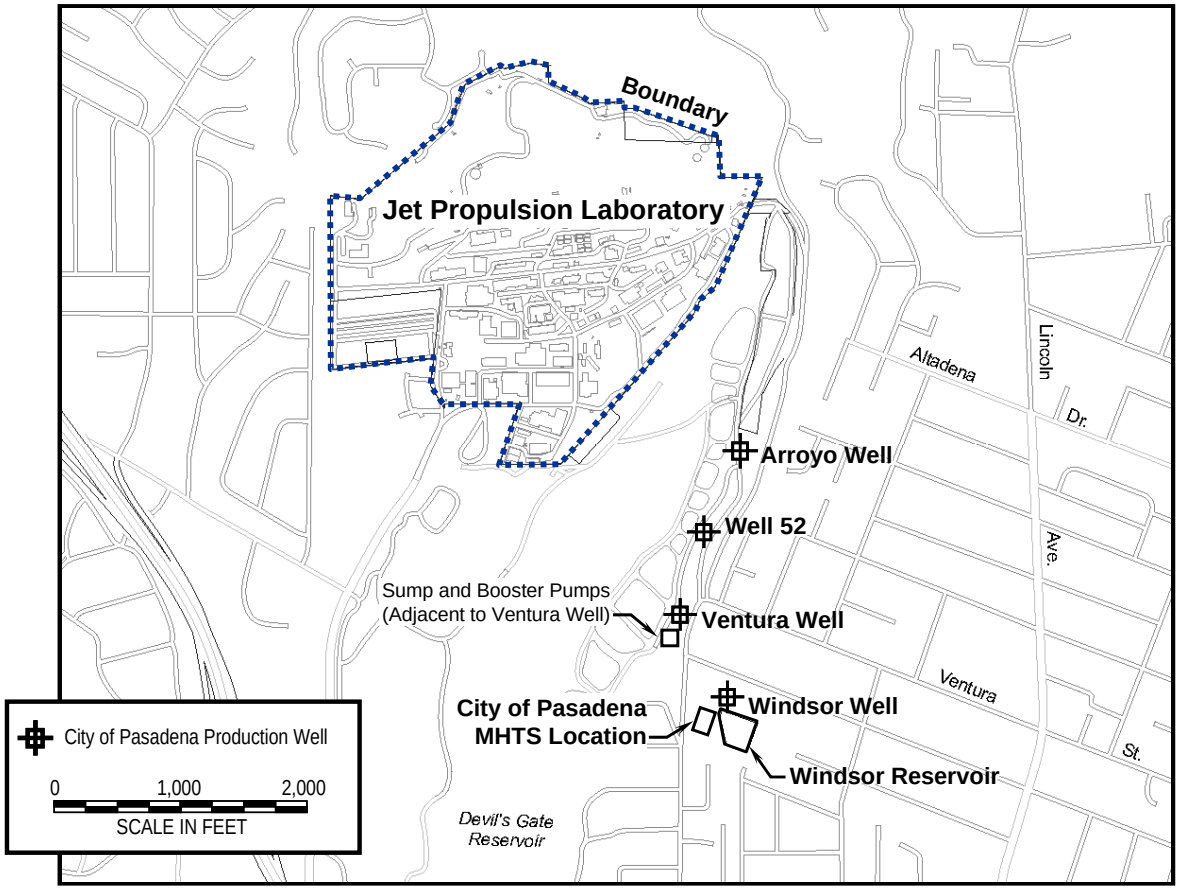


**Figure 1. Map Depicting the Location of the Windsor Reservoir, the City of Pasadena Production Wells, and the Proposed MHTS**

Table 1 summarizes the capital costs associated with each scenario. The total capital cost for pumping from Windsor Well directly to the MHTS is approximately $327,000 more than pumping to the sump. This includes a savings of $155,800 associated with installing smaller booster pumps, but an added cost of $482,800 for installing a new pump and desanding equipment for Windsor Well.

The costs provided in Table 1 are believed to represent a conservative estimate of anticipated capital costs associated with pumping Windsor Well directly to the MHTS. Results of well rehabilitation and pump testing activities may indicate that desanding equipment is not needed, which would reduce the estimated capital cost by approximately $34,500.

**Table 1. Capital Cost Estimates for Windsor Well Scenarios**

| Item | Booster Pump Station | Windsor Well Modifications | Total |
|---|---|---|---|
| **Windsor Well to Sump** | | | |
| Structural | $122,700 | | |
| Mechanical | $594,200 | | |
| Electrical | $642,400 | | |
| *Subtotal* | *$1,359,300* | *$0* | *$1,359,300* |
| **Windsor Well to MHTS** | | | |
| Site Work | | $6,500 | |
| Concrete | | $10,500 | |
| Structural | $122,700 | | |
| Mechanical | $497,400 | $356,900 | |
| Electrical | $583,400 | $108,900 | |
| *Subtotal* | *$1,203,500* | *$482,800* | *$1,686,300* |

## OPERATING COST EVALUATION OF WINDSOR WELL SCENARIOS

Two potential operating schedules have been proposed for the MHTS. The first schedule includes continuous operation of all four production wells, including Windsor Well, for six months per year. The second operation schedule includes year-round operation of the MHTS, with Windsor Well only operating from July through September, or three months per year.

Power costs were estimated for each operating schedule under both Windsor Well scenarios. Pasadena Water and Power (PWP) has published rate schedules (tariffs) for various classes of customers. The booster pumps near Ventura Well would be subject to PWP's large commercial and industrial (C&I) rate schedule L-1 and the Windsor Well would be subject to PWP's medium C&I rate schedule M-1 (see Table 2). Table 3 summarizes the estimated energy costs for both operating schedules, as well as the estimated annual savings realized by pumping the Windsor Well directly to the MHTS.

**Table 2. PWP Rates (effective October 1, 2007) for Three-Phase General Service (Schedule L-1 and M-1)[2]**

| Charge | Rate for Schedule L-1 (Booster Pumps) | Rate for Schedule M-1 (Windsor Well) |
|---|---|---|
| Customer/Meter Charge ($/Month) | $160.21 | $60.22 |
| Distribution Charge ($/kW) | $10.07 | $10.07 |
| Transmission Charge[(a)] ($/kWh) | $0.00802 | $0.00802 |
| Energy Service Charge ($/kWh) | | |
| Summer Peak[(b)] (Noon to 8PM) | $0.10394 | $0.10218 |
| Summer Off-Peak[(b)] (8PM to Noon) | $0.05843 | $0.06063 |
| Winter Peak[(c)] (6AM to 10PM) | $0.06579 | $0.06578 |
| Winter Off-Peak[(c)] (10PM to 6AM) | $0.05659 | $0.05785 |
| Power Cost Adjustment | $0.01000 | $0.01000 |
| Public Benefit Charge[(d)] | $0.00830 | $0.00830 |

Note: Customers that run electric motors exceeding 50 horsepower can be subjected to special provisions at the demand of PWP. The minimum monthly charges for schedule L-1 and M-1 are $3,181.21 and $362.32, respectively.

(a) The transmission charge is calculated by PWP on a quarterly basis (see §13.04.170 of the Light and Power Rate Ordinance).
(b) Summer months are defined as June through September. Weekend and holiday hours are all off-peak.
(c) Winter months are defined as October through May. Weekend and holiday hours are all off-peak.
(d) Other taxes, including the State Environmental Charge, Utility Users Tax, Streetlights and Traffic Signals Tax, and Underground Surtax, do not apply to PWP systems.

**Table 3. Estimated Annual Energy Costs Associated with the Windsor Well Scenarios**

| Description | Schedule 1[(a)] Annual Cost | Schedule 2[(b)] Annual Cost |
|---|---|---|
| Booster Pumps, Including Windsor Well[(c)] | $334,326 | $280,897 |
| Booster Pumps, Excluding Windsor Well[(d)] | $230,451 | $211,960 |
| Windsor Well, Pumping to Sump | $50,102 | $33,468 |
| Windsor Well, Pumping to MHTS | $78,659 | $52,405 |
| Power Cost Paid by NASA, With Windsor Pumping to Sump | $334,326 | $280,897 |
| Power Cost Paid by NASA, With Windsor Pumping to MHTS[(e)] | $259,007 | $230,897 |
| **Estimated Annual Cost Savings, With Windsor Pumping to MHTS** | **$75,319** | **$50,000** |

(a) Scenario 1 includes all four wells operating for 6 months per year (May through October).
(b) Scenario 2 includes year-round operation of the MHTS, with all four wells operating from July to September, Arroyo Well operating from October to April, and Well 52 operating May to June.
(c) Power cost includes operation of two, 350 horsepower booster pumps.
(d) Power cost includes operation of two, 300 horsepower booster pumps.
(e) Power Cost Paid by NASA = [Booster Pumps, Excluding Windsor Well] + [Windsor Well, Pumping to MHTS] – [Windsor Well, Pumping to Sump].

[2] Pasadena Water and Power. 2006. Light and Power Rate Ordinance (In Accordance with Chapter 13.04 of the Pasadena Municipal Code). Revised July 1.

Under the existing agreement between NASA and the City of Pasadena,[3] NASA would pay for energy costs associated with the booster pumps, site lighting, security, and feed pumps. The City of Pasadena would pay for the energy costs associated with the production well pumps. However, as reflected in Table 3, for the operating scenario where Windsor Well pumps directly to the MHTS, it was assumed that NASA would pay the incremental energy costs associated with running the larger well pump needed for Windsor Well.

Under the year-round operating schedule, the total annual power cost to be paid by NASA when Windsor Well pumps to the sump would be $280,897 and $230,897 when Windsor Well pumps directly to the MHTS. Therefore, an annual savings of approximately $50,000 would be realized by Windsor Well pumping directly to the sump. Assuming simple payback (i.e., capital investment ÷ annual savings), the payback period for the additional $327,000 in capital costs associated with pumping the Windsor Well to the MHTS would be approximately 6.5 years. Under the six month operating schedule, the total annual power cost savings would be approximately $75,319 and the payback period would be 4.3 years.

It is estimated that the MHTS will be operational for at least 10 years. Therefore, it is recommended that the MHTS design be modified so that Windsor Well pumps directly to the treatment system.

[3] NASA. 2006. Monk Hill Treatment System Agreement. Parties to the agreement are the City of Pasadena and the California Institute of Technology (Caltech). The agreement is available on the JPL CERCLA Program Web site: http://jplwater.nasa.gov/NMOWeb/AdminRecord/docs/NAS710386.PDF. January.

# APPENDIX D
## Ion Exchange Resin Breakthrough Curves and Specifications

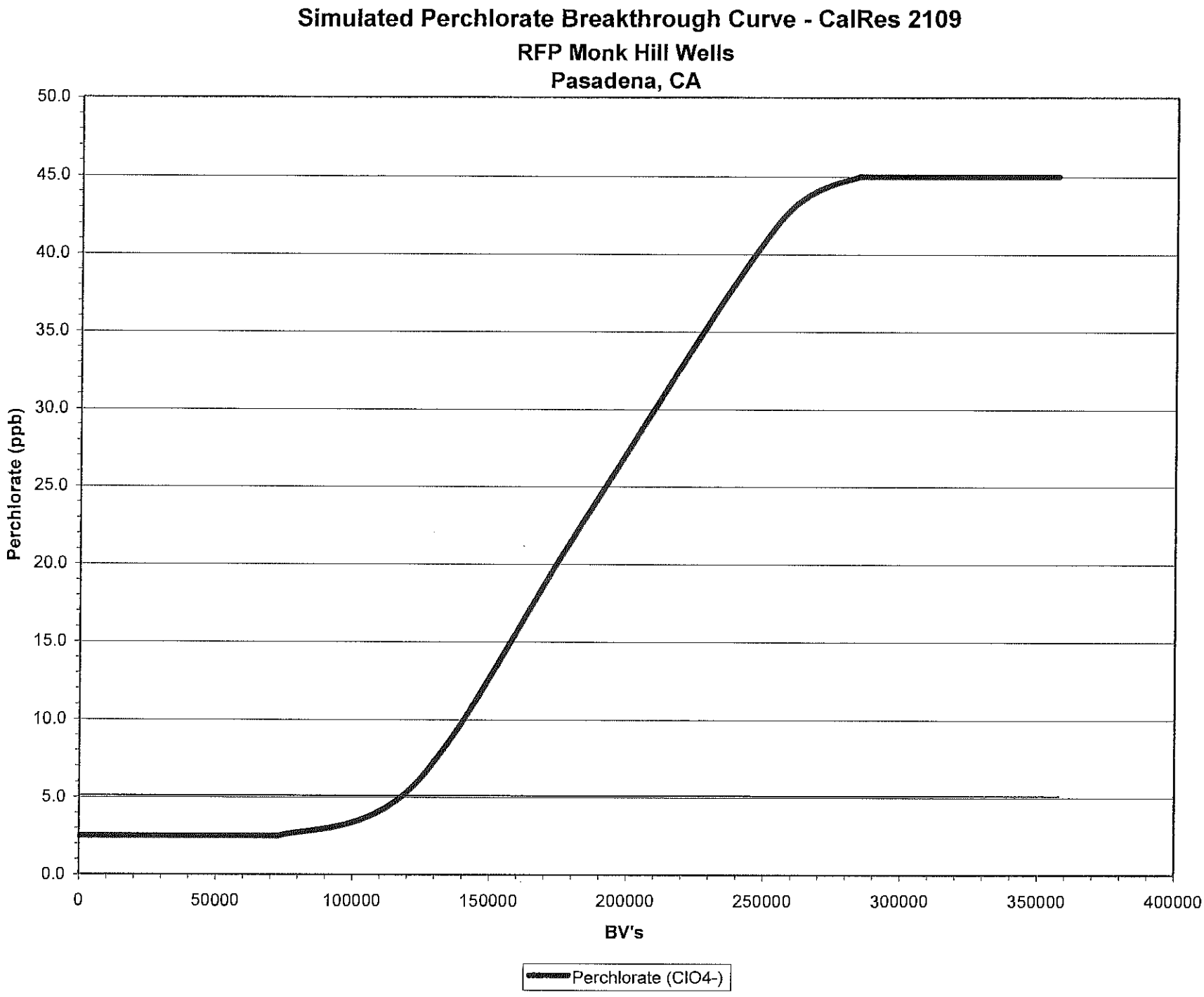
Simulated Perchlorate Breakthrough Curve - CalRes 2109
RFP Monk Hill Wells
Pasadena, CA
Perchlorate (ppb)
50.0
45.0
40.0
35.0
30.0
25.0
20.0
15.0
10.0
5.0
0.0
0
50000
100000
150000
200000
250000
300000
350000
400000
BV's
Perchlorate (ClO4-)

**Figure 1: Simulated Breakthrough Curves - CalRes 2109**
**RFP Monk Hill Wells**
**Pasadena, CA**

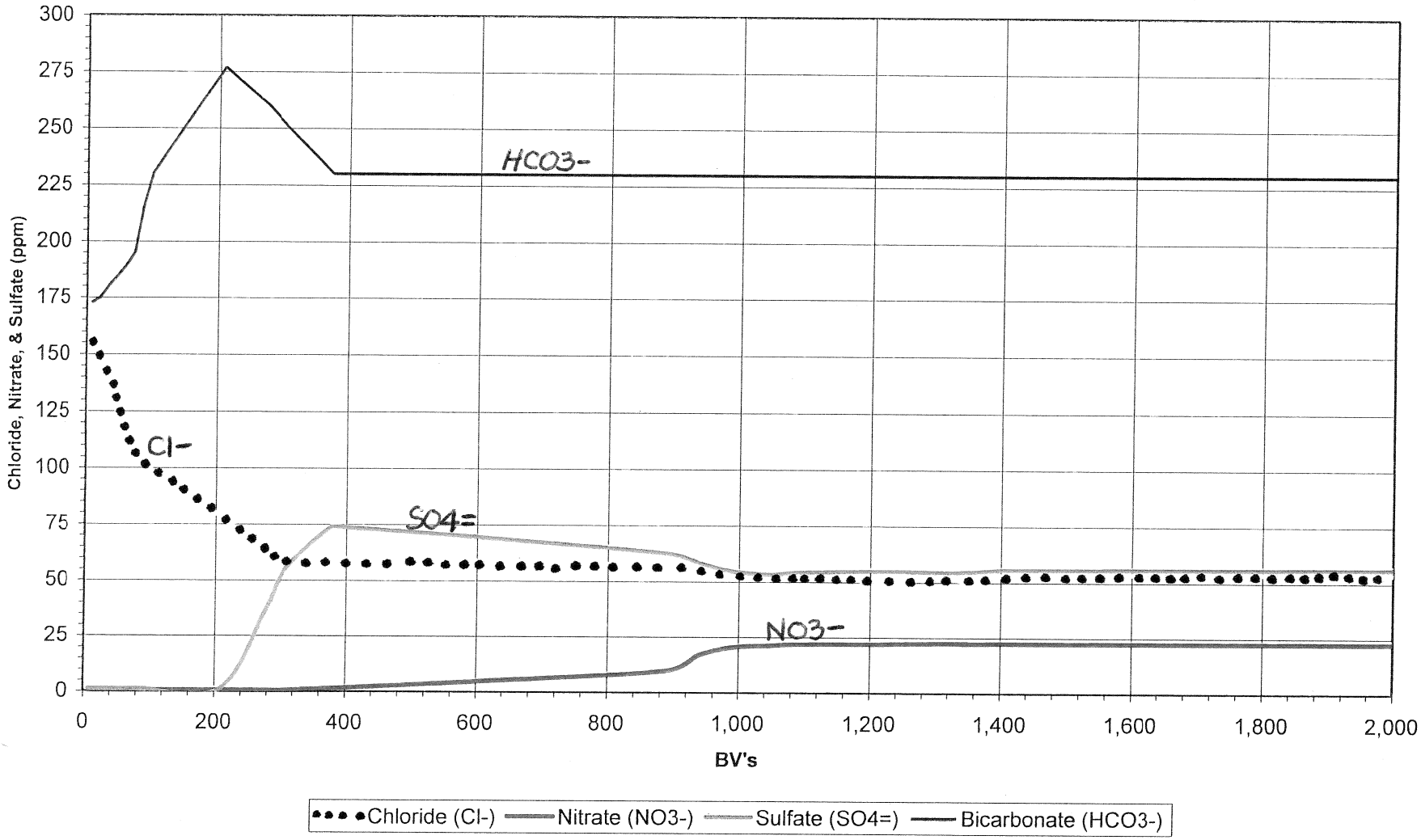

SALES SPECIFICATION SHEET

# CalRes™ 2109

## Anion Exchange Resin

| | |
|---|---|
| Resin Type: | Strong Base Anion |
| Structure: | Macroporous |
| Functional Group: | N-Tributyl Amine |
| Ionic Form: | Chloride |

| Test | Specification Min | Max | Calgon Carbon Test Method |
|---|---|---|---|
| Wet Volume Capacity, Cl Form, meq/mL | 0.60 | | ASTM D 2187 Method M Mod. |
| Water Retention Capacity, Cl Form, % | 50 | 65 | ASTM D 2187 Method B Mod. |
| Bulk Density, g/L | 0.68 | 0.72 | CCC Internal Method |
| Particle Density, g/mL | 1.05 | 1.15 | CCC Internal Method |
| Whole Bead, % | 90 | | CCC Internal Method |
| US Sieve Series, % | | | ASTM D 2187 Method D Mod. |
| + 16 | | 3 | |
| - 50 | | 5 | |

| | |
|---|---|
| Manufacturing Point of Origin: | Product must be manufactured in the United States of America or EU. |
| Min. Required Approvals: | ANSI/NSF-61 by NSF, WQA, UL or other accredited laboratory<br>California Department of Health Services Approval / Acceptance |

This product is Made to Order.

Calgon Carbon Corporation's ion exchange products are continuously being improved and changes may have taken place since this publication went to press.

# APPENDIX E
# Ion Exchange Vessels Drawings

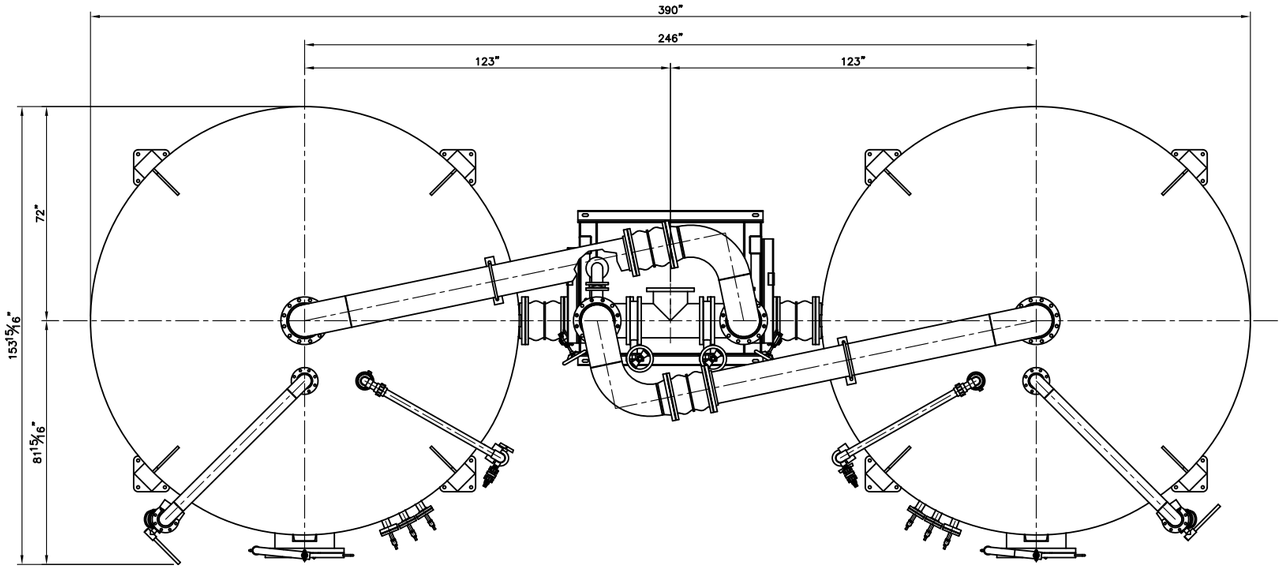


**PLAN**

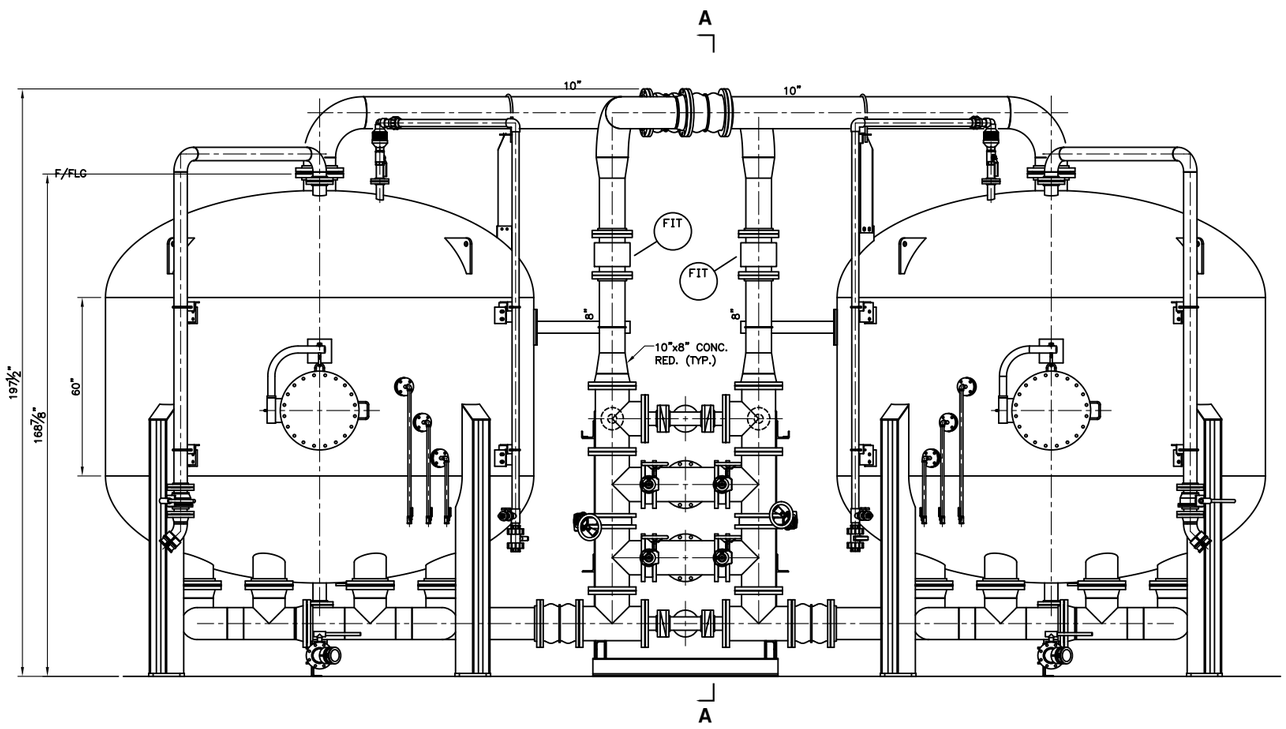


**ELEVATION**

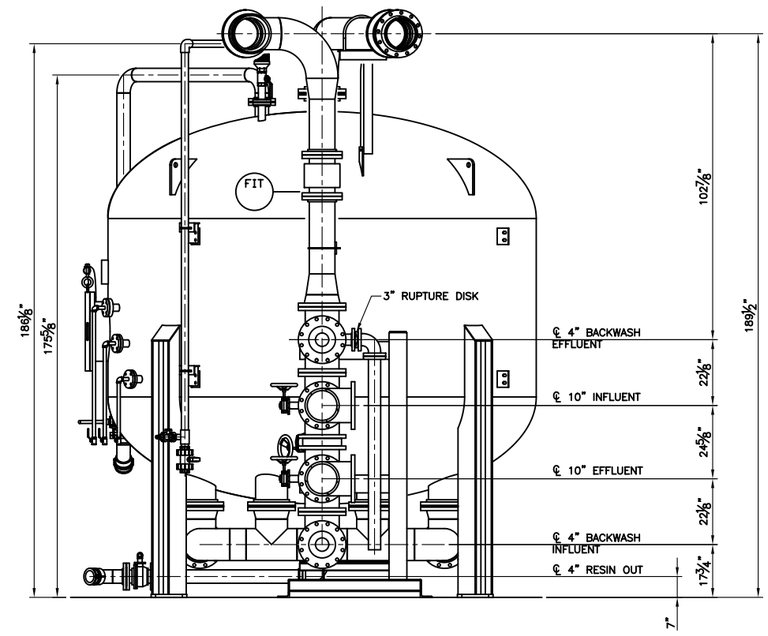


**SECTION A-A**

NOTES:
1. SYSTEM SHOWN IS TYPICAL OF (4) SYSTEMS TO BE SUPPLIED.
2. PAINT TO BE PER CCC SPECIFICATION RS-17 WITH POLYURETHANE TOP COAT.

| REV | DESCRIPTION | APP | DATE |
|---|---|---|---|
| | | | |
| | | | |
| B | ISSUED FOR APPROVAL | RES | 1/26/09 |

REVISIONS

TOLERANCES (unless otherwise specified)

| | | | |
|---|---|---|---|
| ANGULAR | ±0°30' | DECIMAL (2 PLACES) | ±.010 |
| FRACTIONAL | ±1/16" | DECIMAL (3 PLACES) | ±.005 |
| DECIMAL (1 PLACE) | ±.015 | DECIMAL (4 PLACES) | ±.0005 |

THIS DRAWING AND DESIGN IS THE PROPERTY OF CALGON CARBON CORPORATION AND IS NOT TO BE REPRODUCED IN WHOLE OR IN PART NOR EMPLOYED FOR ANY PURPOSE OTHER THAN SPECIFICALLY PERMITTED IN WRITING BY CALGON CARBON CORPORATION. THIS DRAWING LOANED SUBJECT TO RETURN ON DEMAND.

| | NAME | DATE |
|---|---|---|
| DRAFTER | RES | 9/25/06 |
| DESIGNER | | |
| CHECKER | | |
| APPROVAL | | |
| PROJECT No. | IX-08089.MHLL | |

CALGON

CALGON CARBON CORPORATION

CLIENT: MONK HILLS WELS
PASADENA, CA

TITLE: IX RESIN SERVICE
MODEL 12
GENERAL ARRANGEMENT

| DWG. Size | SHEET No. | SCALE |
|---|---|---|
| D | 1 OF 2 | NONE |

DWG. No. 91075163 REV. B

V:\2008\IX-08089.MHLL\Drawings\General Arrangements\91075163 - GA IX.dwg Jan 28, 2009 - 1:04pm

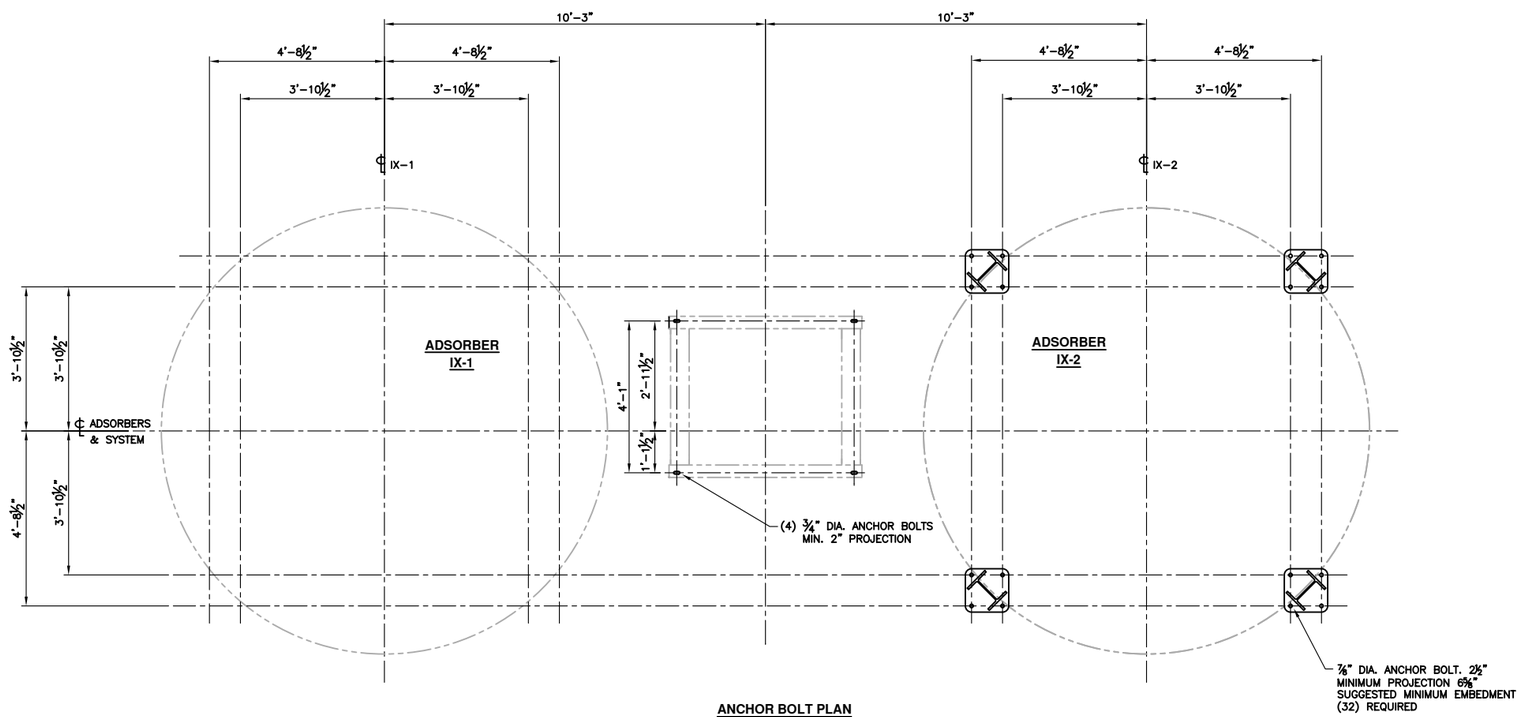


**ANCHOR BOLT PLAN**

ANCHOR PATTERN SHOWN IS FOR ATTACHMENT OF VESSEL BASEPLATES TO A CONCRETE SLAB IN SIESMIC ZONE 4. TWO LARGE CENTER HOLES ARE PROVIDED IN EACH BASEPLATE FOR ATTACHEMENT TO STEEL FRAMING.

| REV | DESCRIPTION | APP | DATE |
|---|---|---|---|
| B | ISSUED FOR APPROVAL | RES | 1/26/09 |

REVISIONS

TOLERANCES (unless otherwise specified)

| | | | |
|---|---|---|---|
| ANGULAR | ±0°30' | DECIMAL (2 PLACES) | ±.010 |
| FRACTIONAL | ±1/16" | DECIMAL (3 PLACES) | ±.005 |
| DECIMAL (1 PLACE) | ±.015 | DECIMAL (4 PLACES) | ±.0005 |

THIS DRAWING AND DESIGN IS THE PROPERTY OF CALGON CARBON CORPORATION AND IS NOT TO BE REPRODUCED IN WHOLE OR IN PART NOR EMPLOYED FOR ANY PURPOSE OTHER THAN SPECIFICALLY PERMITTED IN WRITING BY CALGON CARBON CORPORATION. THIS DRAWING LOANED SUBJECT TO RETURN ON DEMAND

| | NAME | DATE |
|---|---|---|
| DRAFTEP | RES | 9/25/06 |
| DESIGNER | | |
| CHECKER | | |
| APPROVAL | | |
| PROJECT No. | IX-08089.MHLL | |

CALGON

CALGON CARBON CORPORATION

CLIENT: MONK HILLS WELS
PASADENA, CA

TITLE: IX RESIN SERVICE
MODEL 12
GENERAL ARRANGEMENT

| DWG. Size | SHEET No. | SCALE |
|---|---|---|
| D | 2 OF 2 | NONE |

DWG. No. 91075163 REV. B

V:\2008\IX-08089.MHLL\Drawings\General Arrangements\91075163 - GA IX.dwg Jan 28, 2009 - 1:04pm

# APPENDIX F
# GAC Specifications

# FILTRASORB® 300
## Granular Activated Carbon for Municipal Specifications

CALGON
CALGON CARBON CORPORATION

### Description

FILTRASORB® 300 is a granular activated carbon developed by Calgon Carbon Corporation for the removal of taste and odor compounds, disinfection by-product precursors, and other dissolved organic compounds from potable water.

This activated carbon is made from selected grades of bituminous coal to produce a high activity, durable granular product capable of withstanding the abrasion associated with repeated backwashing, air scouring, and hydraulic transport. Activation is carefully controlled to produce an equal blend of both low energy pores as measured by iodine number and high energy pores as measured by trace capacity number for effective adsorption of a broad range of high and low molecular weight organic contaminants. The higher density of this activated carbon results in a greater adsorptive capacity per filter volume as measured by the volume iodine number. The product is also formulated to comply with all the applicable provisions of the AWWA Standard for Granular Activated Carbon, edition B604-05, the stringent extractable metals requirements of ANSI/NSF Standard 61, and the Food Chemicals Codex.

| Specifications | Value |
|---|---|
| Iodine Number. | 900 mg/g (min) |
| Moisture by weight | 2% (max) |
| Effective size | 0.8 - 1.0 mm |
| Uniformity Coefficient | 2.1 (max) |
| Abrasion No. | 78 (min) |
| Trace Capacity Number | 10 mg/cc (min) |
| Screen Size by weight, US Sieve Series | |
| On 8 mesh | 15% (max) |
| Through 30 mesh | 4% (max) |

| Typical Property | Value |
|---|---|
| Apparent Density | 0.56 g/cc |
| Ash by weight | 7% |

| Features | Benefits |
|---|---|
| Bituminous-based raw material | Provides higher hardness relative to other raw materials reducing the generation of fines and product losses during backwashing. |
| Coal is pulverized and reagglomerated with suitable binder | Pore structure provides an equal blend of low and high energy pores for effective removal of a broad range of high and low molecular weight organic compounds.<br>Has a high density, resulting in a greater adsorption capacity per filter volume, wets readily, and does not float, thus minimizing loss during backwash operations.<br>Creates optimal transport paths for faster adsorption. |

### Bed Expansion

*Based on backwashed and segregated bed*

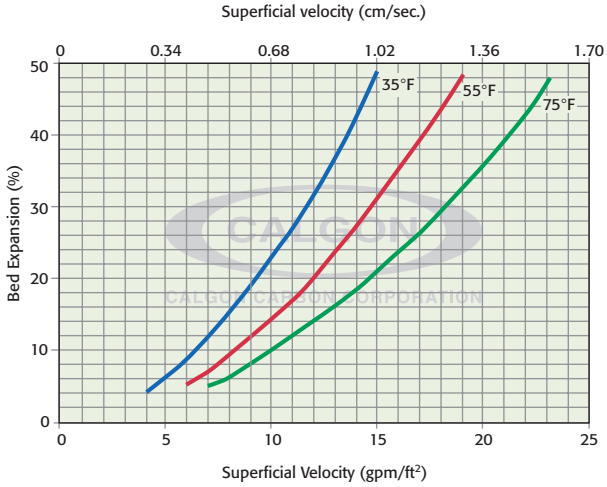


### Pressure Drop

*Based on backwashed and segregated bed*

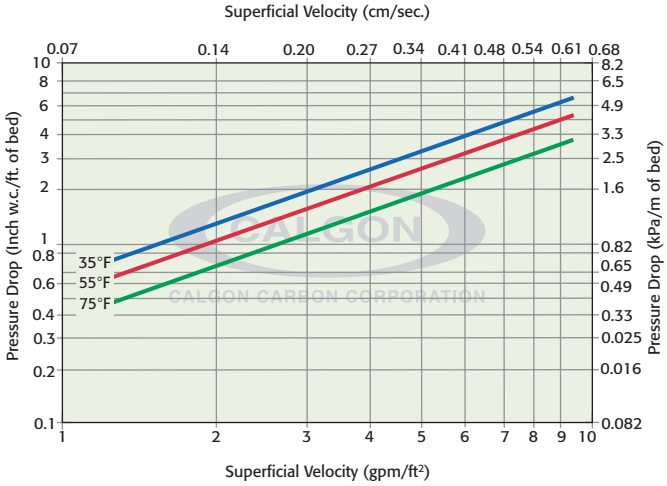

# FILTRASORB® 300
## Granular Activated Carbon for Municipal Specifications

CALGON
CALGON CARBON CORPORATION

### Applications

FILTRASORB® 300 activated carbon can be used to treat surface and groundwater sources for the production of drinking water. This product can be used as a complete replacement for sand and anthracite media. FILTRASORB® 300 activated carbon functions as a dual purpose media, providing both filtration and adsorption. FILTRASORB® has been used successfully in drinking water applications for over 40 years.

### Design Considerations

As a replacement for existing filter media, conversion to FILTRASORB® 300 granular activated carbon imposes no major changes to a plant's normal filtration operations. Calgon Carbon Corporation can also provide complete modular adsorption systems as an add-on treatment stage if required.

### Safety Message

Wet activated carbon preferentially removes oxygen from air. In closed or partially closed containers and vessels, oxygen depletion may reach hazardous levels. If workers are to enter a vessel containing carbon, appropriate sampling and work procedures for potentially low oxygen spaces should be followed, including all applicable Federal and State requirements.

CALGON

CALGON CARBON CORPORA I

Making Water and Air Safer and Cleaner

Calgon Carbon Corporation
P.O. Box 717
Pittsburgh, PA USA 15230-0717
1-800-422-7266
Tel: 1-412-787-6700
Fx: 1-412-787-6713

Chemviron Carbon
European Operations of
Calgon Carbon Corporation
Zoning Industriel C de Feluy
B-7181 Feluy, Belgium
Tel: + 32 (0) 64 51 18 11
Fx: + 32 (0) 64 54 15 91

Calgon Carbon Asia PTE LTD
9 Temasek Boulevard
#08-01A Suntec Tower Two
Singapore 038989
Tel: + 65 6 221 3500
Fx: + 65 6 221 3554

**Your local representative**

Copyright© 2008 Calgon Carbon Corporation, all rights reserved.

# APPENDIX G
# GAC Vessels Drawings

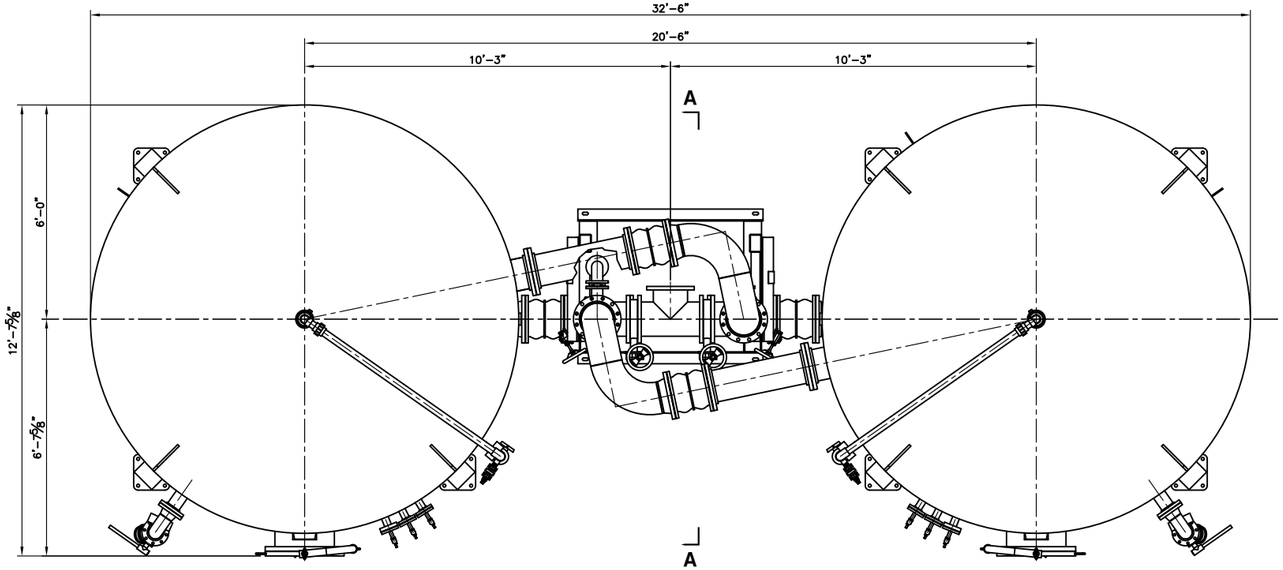


PLAN

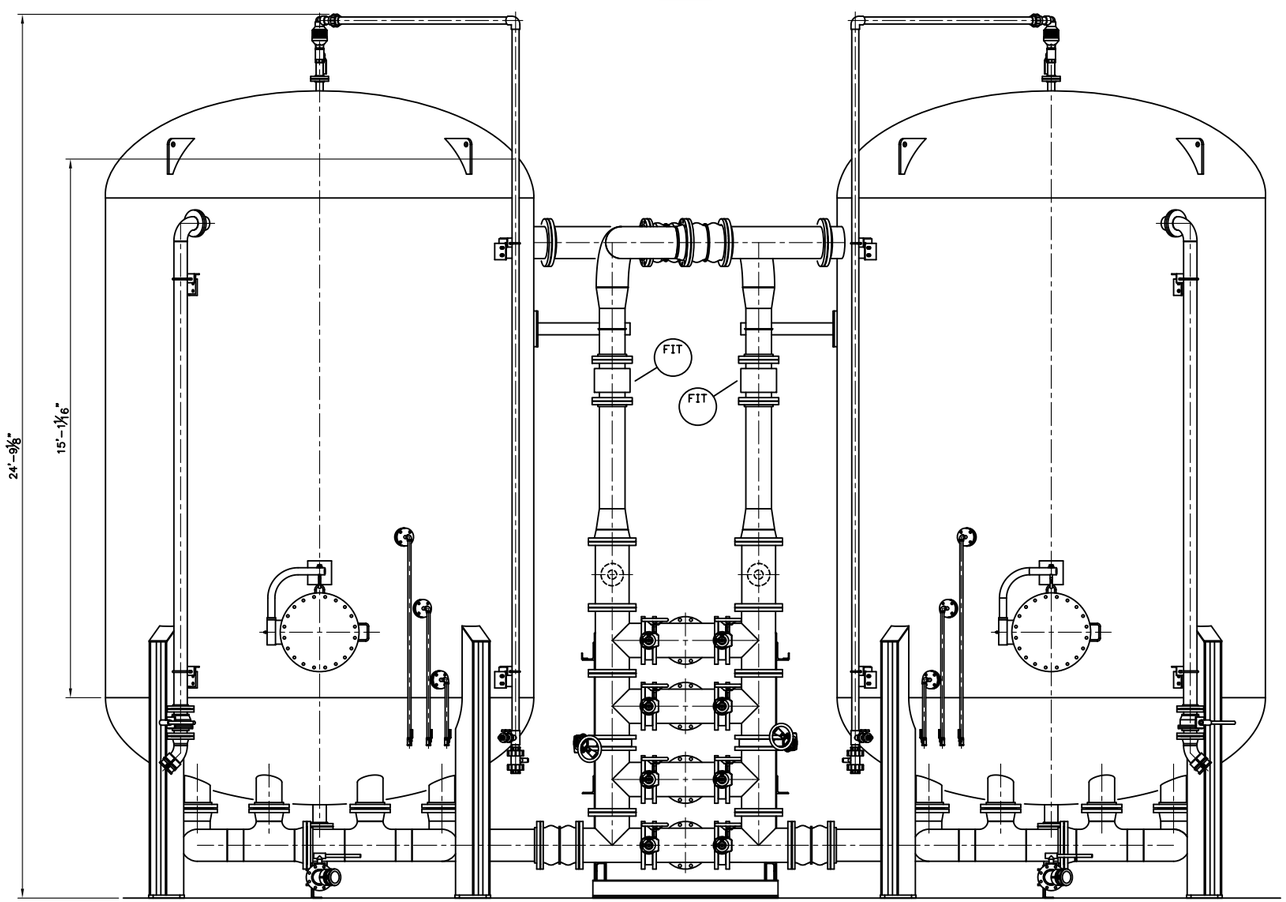


ELEVATION

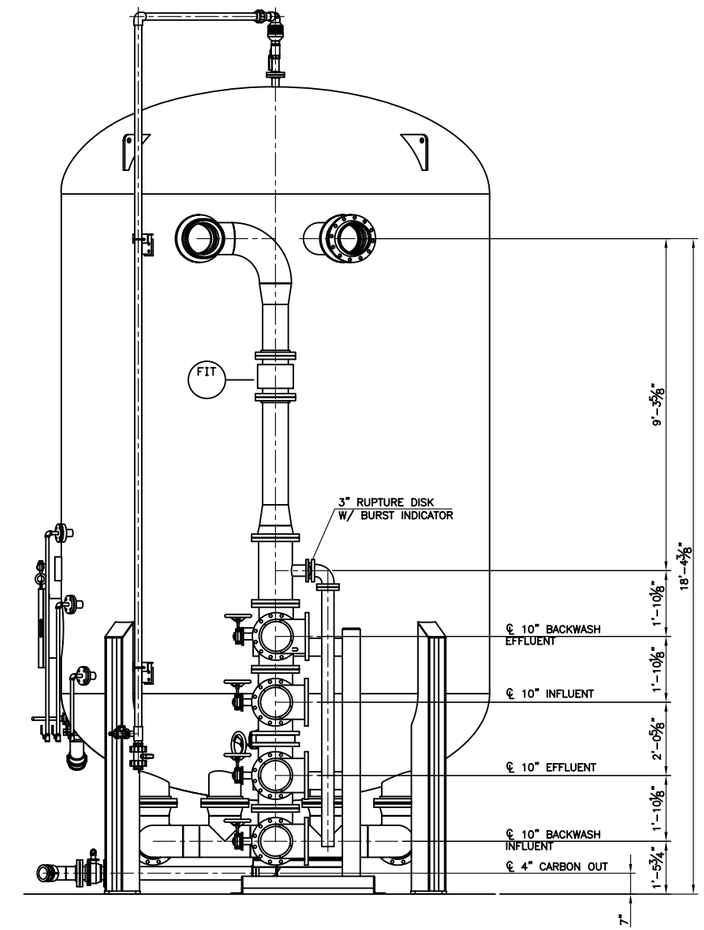


SECTION A-A

NOTES:
1. SYSTEM SHOWN IS TYPICAL OF (5) SYSTEMS TO BE SUPPLIED.
2. PAINT TO BE PER CCC SPECIFICATION RS-17 WITH POLYURETHANE TOP COAT.

| REV | DESCRIPTION | APP | DATE |
|---|---|---|---|
| | | | |
| | | | |
| | | | |

REVISIONS

TOLERANCES (unless otherwise specified)

| | | | |
|---|---|---|---|
| ANGULAR | ±0°30' | DECIMAL (2 PLACES) | ±.010 |
| FRACTIONAL | ±1/16" | DECIMAL (3 PLACES) | ±.005 |
| DECIMAL (1 PLACE) | ±.015 | DECIMAL (4 PLACES) | ±.0005 |

THIS DRAWING AND DESIGN IS THE PROPERTY OF CALGON CARBON CORPORATION AND IS NOT TO BE REPRODUCED IN WHOLE OR IN PART NOR EMPLOYED FOR ANY PURPOSE OTHER THAN SPECIFICALLY PERMITTED IN WRITING BY CALGON CARBON CORPORATION. THIS DRAWING LOANED SUBJECT TO RETURN ON DEMAND.

| | NAME | DATE |
|---|---|---|
| DRAFTER | RES | 9/25/06 |
| DESIGNER | | |
| CHECKER | | |
| APPROVAL | | |
| PROJECT No. | IX-08089.MHLL | |

CALGON

CALGON CARBON CORPORATION

CLIENT: MONK HILLS WELS
PASADENA, CA

TITLE: GAC SERVICE
MODEL 12
GENERAL ARRANGEMENT

| DWG. Size | SHEET No. | SCALE |
|---|---|---|
| D | 1 OF 2 | NONE |

DWG. No. 91074164 REV. A

V:\2008\IX-08089.MHLL\Drawings\General Arrangements\91075164 - GA GAC.dwg Jan 28, 2009 - 1:03pm

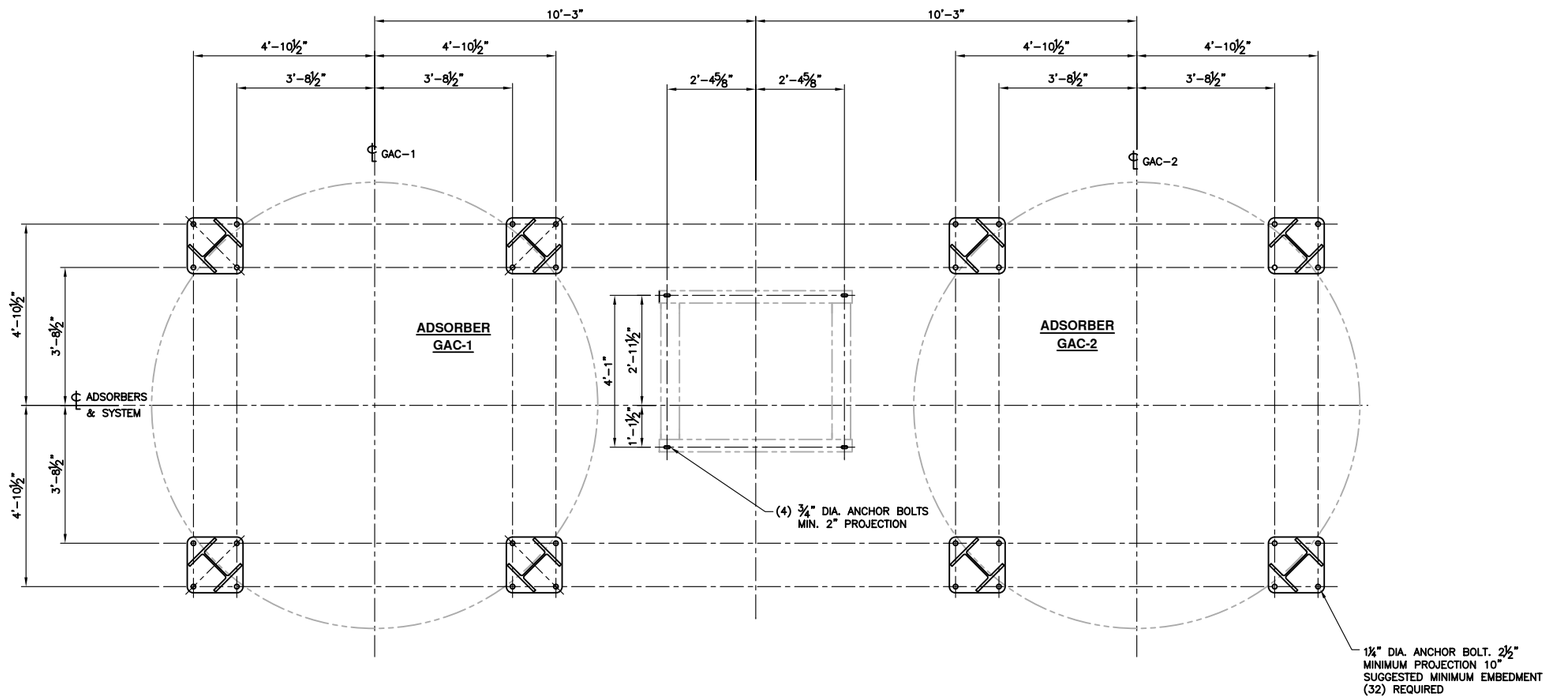


**ANCHOR BOLT PLAN**

ANCHOR PATTERN SHOWN IS FOR ATTACHMENT OF VESSEL BASEPLATES TO A CONCRETE SLAB IN SIESMIC ZONE 4. TWO LARGE CENTER HOLES ARE PROVIDED IN EACH BASEPLATE FOR ATTACHEMENT TO STEEL FRAMING.

| REV | DESCRIPTION | APP | DATE |
|---|---|---|---|
| | | | |
| | | | |
| | | | |

REVISIONS

TOLERANCES (unless otherwise specified)

| | | | |
|---|---|---|---|
| ANGULAR | ±0°30' | DECIMAL (2 PLACES) | ±.010 |
| FRACTIONAL | ±1/16" | DECIMAL (3 PLACES) | ±.005 |
| DECIMAL (1 PLACE) | ±.015 | DECIMAL (4 PLACES) | ±.0005 |

CALGON

CALGON CARBON CORPORATION

THIS DRAWING AND DESIGN IS THE PROPERTY OF CALGON CARBON CORPORATION AND IS NOT TO BE REPRODUCED IN WHOLE OR IN PART NOR EMPLOYED FOR ANY PURPOSE OTHER THAN SPECIFICALLY PERMITTED IN WRITING BY CALGON CARBON CORPORATION. THIS DRAWING LOANED SUBJECT TO RETURN ON DEMAND

| | NAME | DATE |
|---|---|---|
| DRAFTEP | RES | 9/25/06 |
| DESIGNER | | |
| CHECKER | | |
| APPROVAL | | |
| PROJECT No. | IX-08089.MHLL | |

CLIENT: MONK HILLS WELS
PASADENA, CA

TITLE: GAC SERVICE
MODEL 12
GENERAL ARRANGEMENT

| DWG. Size | SHEET No. | SCALE |
|---|---|---|
| D | 2 OF 2 | NONE |

DWG. No. 91075164 REV. A

V:\2008\IX-08089.MHLL\Drawings\General Arrangements\91075164 - GA GAC.dwg Jan 28, 2009 - 1:03pm

# APPENDIX H
# Windsor Site Drainage Analysis

CIVILTEC engineering inc.

**General Civil, Municipal, Water and Wastewater Engineering, Planning, Construction Management and Surveying**
**Monrovia Prescott Phoenix Kingman**

July 25, 2008

Battelle Environmental Restoration Department
125 Pheasant Run, Suite 115
Newtown, PA 18940

Attention: Carolyn Scala

Subject: Draft Windsor Site Drainage Analysis

Dear Ms. Scala:

The previous analysis performed in May of 2008 by Civiltec reviewed the general area of the Windsor site and assumed that the entire site excluding the roof area of the Windsor Reservoir drains to the existing drainage swale (3.8 acres). The intent was to determine the relative increase in flow due to a 50-year 24-hour storm considering an unimproved versus an improved site. It was determined in this effort that runoff from the site would be expected to increase from 16.38 cubic feet per second (cfs) to 16.57 cfs, or 1.2%. In addition, it was determined that the drainage swale is inadequate for servicing the runoff generated from either the unimproved or improved site during a 50-year storm.

During a conference call on June 25, City of Pasadena Public Works indicated that the lots located directly adjacent to and north of the Windsor site may impact the total runoff on the site. In response to this discussion, Civiltec reviewed the drainage elements of the Windsor Reservoir site and determined that the prevailing drainage from the lots which are located north of the Windsor site could adversely impact the existing drainage swale. However, property-specific drainage information cannot be ascertained from the general drainage pattern of the area. Therefore, an initial investigation was performed to research available records and studies performed for the West Altadena Drain System, which is primarily located on Figueroa Street just south of site. A comparable effort was performed for the Bond 710 drainage system located on Ventura Street just north of the site. Findings from this research effort were inconclusive as to the direction and ultimate disposition of discharge from these properties. As a result a field investigation was performed to determine the final drainage direction from the neighboring lots. It was found that a number of the lots did impact the drainage of the Windsor Site. However it was also found that a number of lots do not contribute to the runoff that will ultimately impact the drainage swale (see Exhibit A).

***Site Sheet Flow***

The total area of the Windsor site is approximately 5.2 acres, 1.4 of which is concentrated on the roof of the Windsor Reservoir. The runoff generated on the Windsor Reservoir is diverted to a separate drainage location and is not computed in the site sheet flow.

In addition, a review of existing topographic maps and through a field investigation it was

concluded that there are two other areas of the Windsor Site which drain to locations other than the existing drainage swale. The first area is situated adjacent to and directly north, east and south of the Windsor reservoir, and is comprised of piled soil abutting the walls of the reservoir and sloping away from and into the adjacent properties. This area is approximately 0.605 Acres.

The second area has been identified in the northwest corner of the Windsor site. This area currently exhibits a general drainage pattern that diverts runoff toward Windsor Avenue by way of sheet flow, rather than toward the drainage swale. Plans for grading of the site as part of the Monk Hill Treatment System (MHTS) construction would not change this drainage pattern. This area generally extends 160-feet east of the northwest fence corner and ultimately daylights at the intersection of the western and southern fence of the property, and is approximately 0.776 acres.

Total flow was computed using the time of concentration (TC) calculator developed by the County of Los Angeles County Department of Public Works (LADPW) in accordance with the modified rational method. The calculation considered an improved lot with the proposed MHTS considering the drainage impact from the adjacent lots identified on the northern boundary.

The Windsor site generally consists of relatively compact and impervious soil. Soil classification of the site is designated as 014 (See Figure 1) per LADPW standards or a Ramona Sandy Loam. The Ramona Sandy Loam is generally well-drained with slow to rapid runoff and moderately slow permeability. The site generally drains from the northeast to the southwest.

Based on the June 25 discussion with City of Pasadena Public Works, the site runoff calculations and drainage analysis should be conducted using a 25-year 24-hour storm event and as a part of the Condition Use Permit requirements. Due to its close proximity to the San Gabriel Mountains, the site experiences relatively high rain intensities. A final 25-year 24-hour rain intensity of 7.46 inches was derived by applying the multiplication factor of 0.878 to the 50-year 24-hour rain intensity interpolated from the Isoheyt contour map (Figure 1) provided by LADPW.

Drainage from the improved site with the proposed MHTS is diverted through an existing concrete triangular swale (“V” Ditch), on the south side of the site. The ditch has a total depth of 1.5 feet and a top width of 3 feet and runs approximately 235 feet along the south western portion of the property line abutting the existing fence. The swale slopes gradually from east to west along this alignment with an average slope of 0.0035 percent. The swale daylights in Windsor Avenue underneath the existing fence, and discharge from the site is directed down Windsor Avenue to the nearest storm drain.

**Figure 1 - Pasadena 50-Yr 24-Hr Isohyet and Soil Classification**

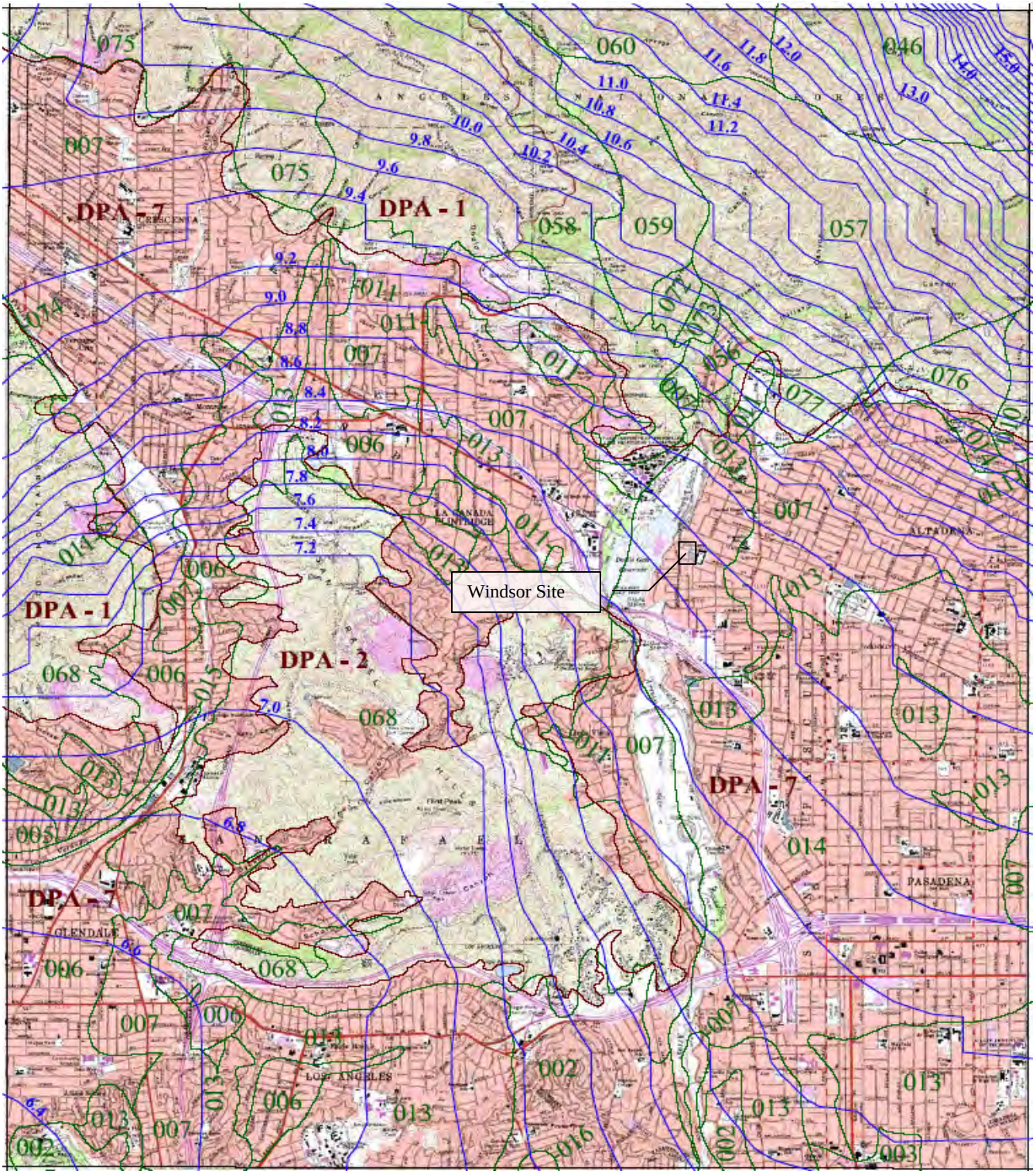

***Improved Site with Proposed MHTS and Adjacent Properties to the North***

The total runoff considering the improved site with proposed MHTS plus the identified adjacent lots to the north of the Windsor site is approximately 10.09 cfs (See Figure 2). The impervious areas considered were those identified on the Windsor Site and those areas covered by residential improvement such as homes and driveways from the identified adjacent lots. The total impervious area for the adjacent lots was assumed to be 40%. The total impervious area of all areas was weighted and was determined to be 32.5%. The total area of the adjacent lots considered in this calculation was determined to be 0.855 acres. As a result the total area of the adjacent lots and the Windsor Site which will flow to the existing drainage swale is 3.24 acres. The drainage path from the adjacent lots was assumed to be from the northeastern corner of the most eastern lot. The total length of the drainage path is 656 feet. The average slope along the drainage path was assumed to be 0.019.

Figure 2 - Improved Site with Proposed MHTS and Adjacent Properties to the North Runoff

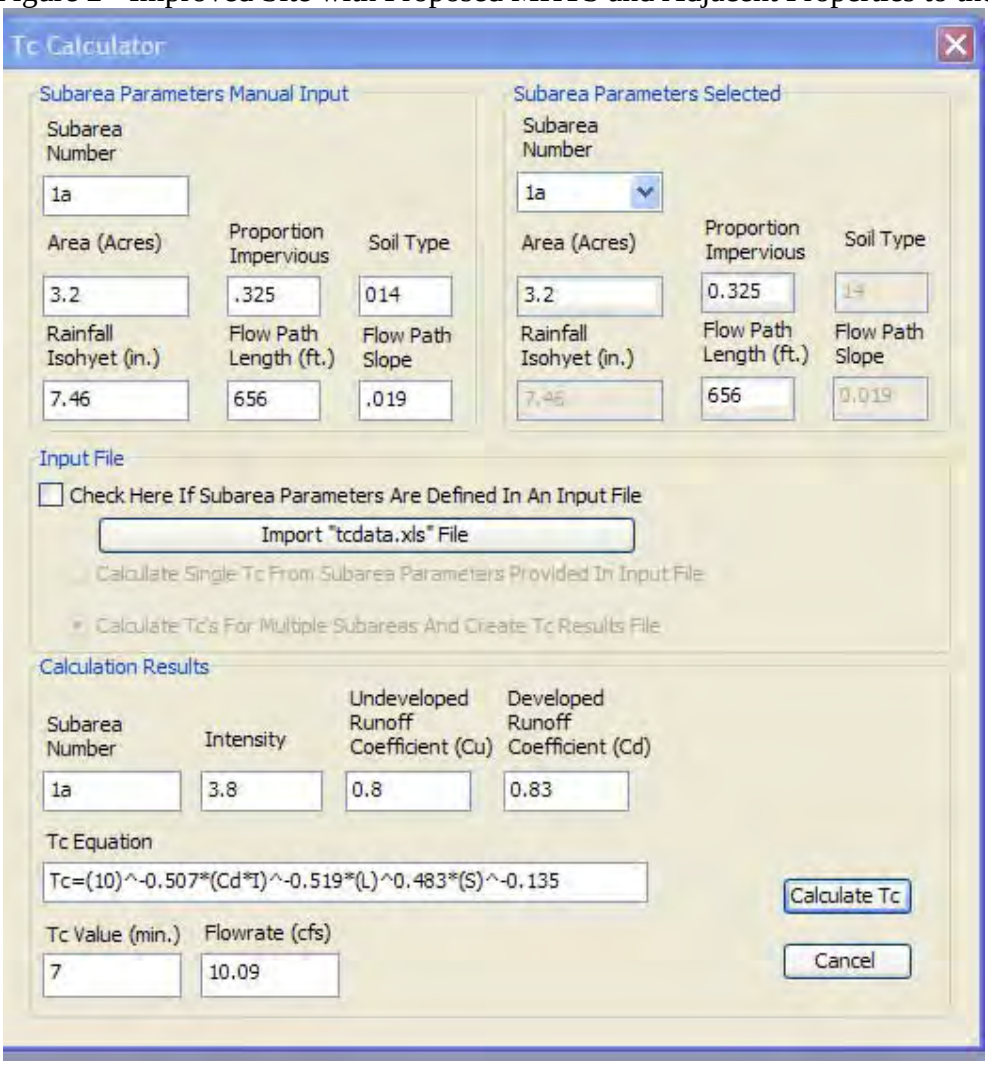

The analysis performed on the drainage swale indicates that the theoretical depth of water in the swale would be near 1.51 feet under these conditions (See Figure 3). As a result the swale has sufficient capacity to service the runoff needs of the site as well as the identified adjacent lots.

**Figure 5 - Normal Water Depth in Ditch Including Adjacent Properties**

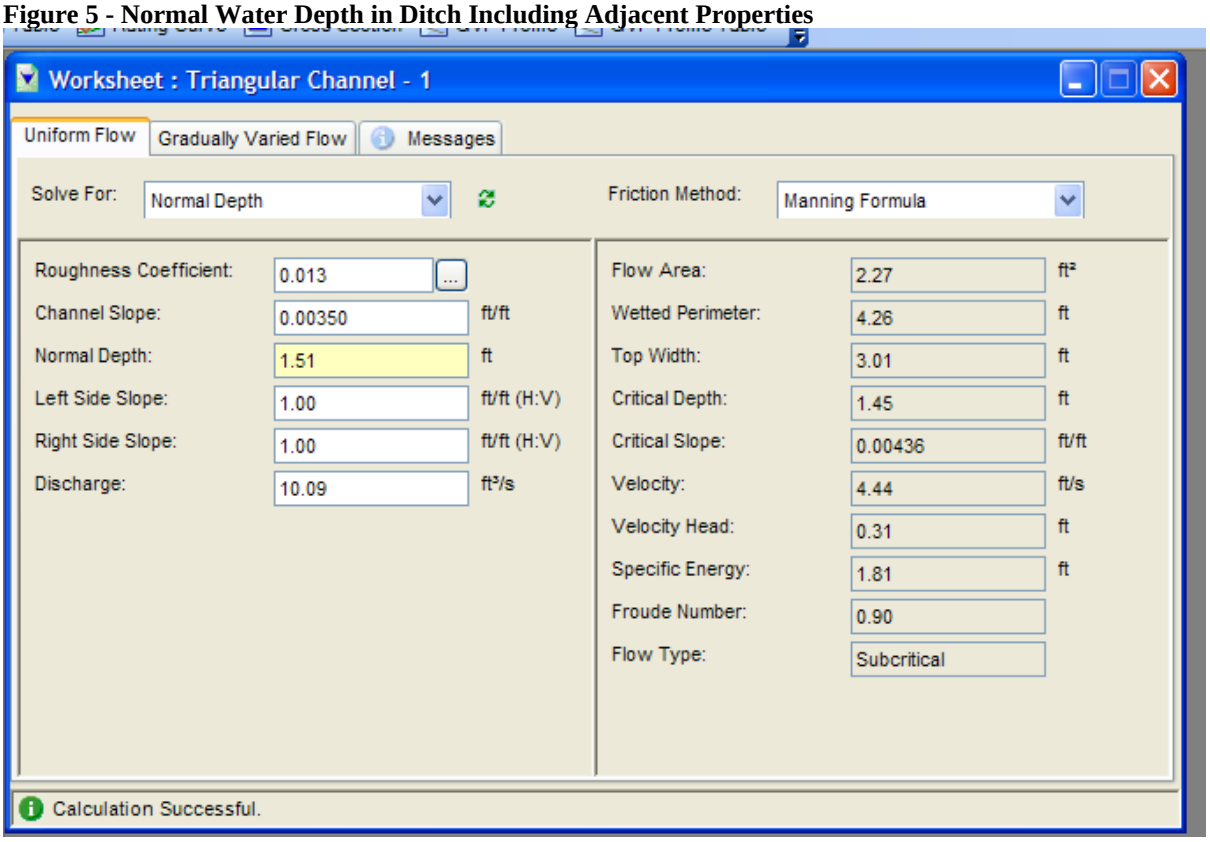


***Conclusion***

Under these case conditions the existing drainage swale is adequately sized to handle the 25-year storm as defined in Figures 2 & 3. No additional improvements are recommended to the swale. Improvements of the curb outlet which directs runoff to Windsor Avenue from the drainage swale is warranted to ensure sufficient capacity is provided and that blockage does not persist thus causing overflow into the adjacent property.

If you should have any questions please feel free to contact Mr. Shem Hawes at (626) 357-0588 or by way of e-mail at shawes@civiltec.com.

Very truly yours,

***CIVILTEC engineering, inc.***

C. Shem Hawes, P.E.
Project Engineer

CSH:WDB:r

X:\2007\27140-JPL Monkhill Treatment Plant\Documents\Letters\Runoff Routing Drainage Calcs-20080723.doc

Battelle Institute
Carolyn Scala
Windsor Site Drainage Analysis
July 25, 2008
Exhibit A

SCALE 1"=40'

AREA TO BE DRAINED TO EX. SWALE.

AREA TO BE DRAINED ELSE WHERE.

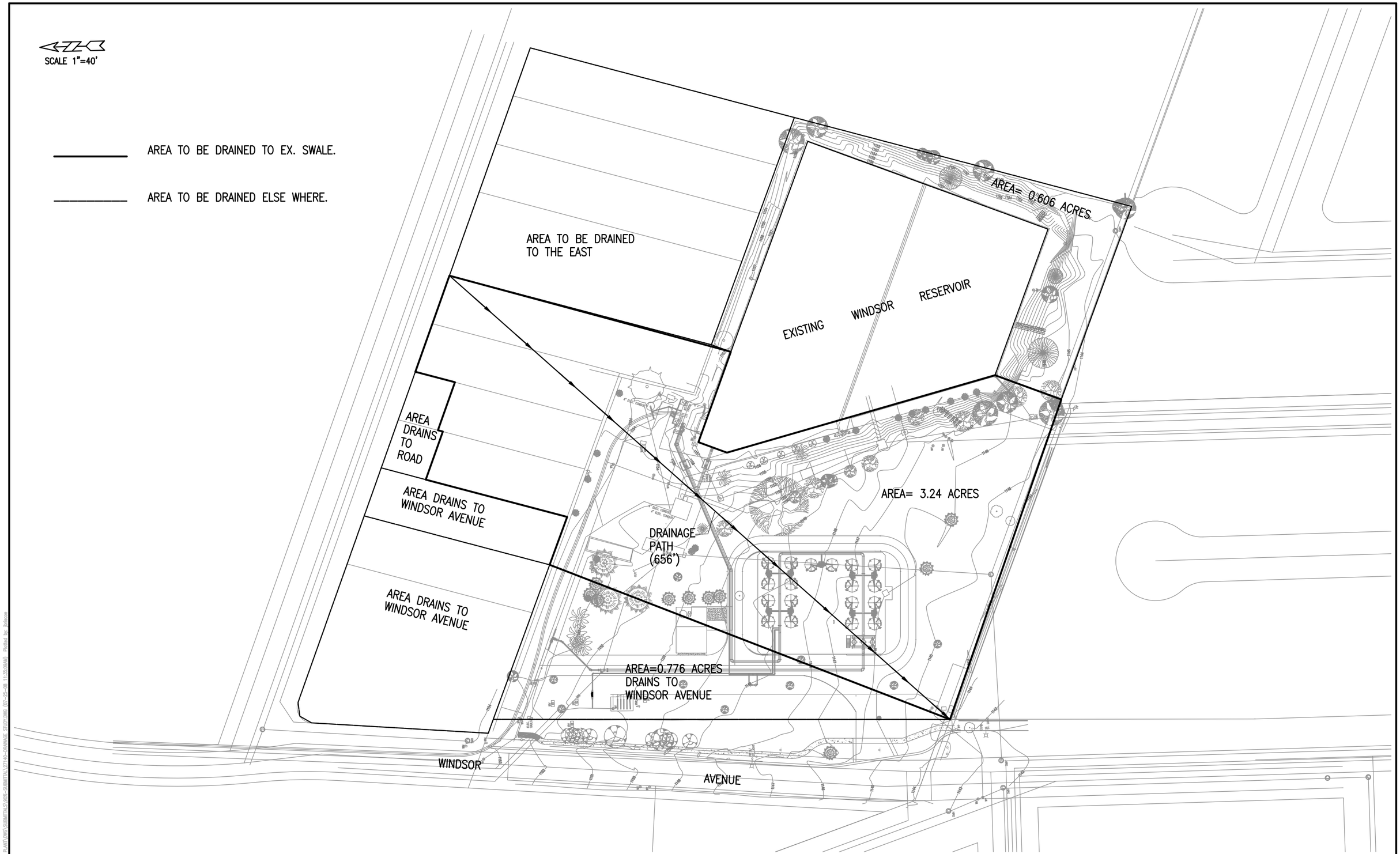


| REVISION | | |
|---|---|---|
| NO. | DESCRIPTION | DATE |
| | | |
| | | |
| | | |
| | | |

APPROVED BY:

CHRISTOPHER SHEM HAWES — 69578 RCE — DATE

APPROVED: — DATE

APPROVED: — DATE

PLANS PREPARED BY:

CIVILTEC engineering inc.

*General Civil, Municipal, Water and Wastewater Engineering, Planning, Construction Management and Surveying*

118 West Lime Avenue
Monrovia, Ca. 91016
Phone: (626) 357-0588
Fax: (626) 303-7957

Battelle
The Business of Innovation

CITY OF PASADENA — INCORPORATED JUNE 1886

MONK HILL TREATMENT SYSTEM
DRAINAGE STUDY

| DESIGN: CSH | CHECKED: CSH | DRAWN: AMH | DESIGN DATE: JULY 2008 |
|---|---|---|---|
| JOB NO.: 27140 | DRAWING NO.: E-140 | E-1670 | SHEET — OF — |