APPENDIX E
Ion Exchange Vessels Drawings

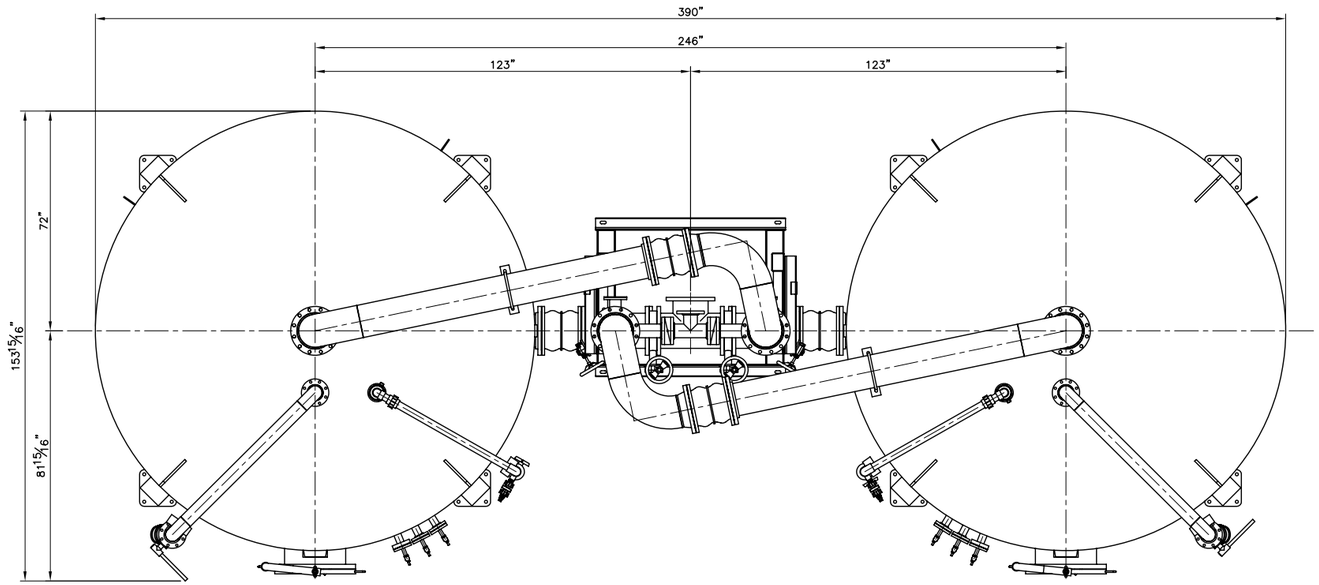

PLAN

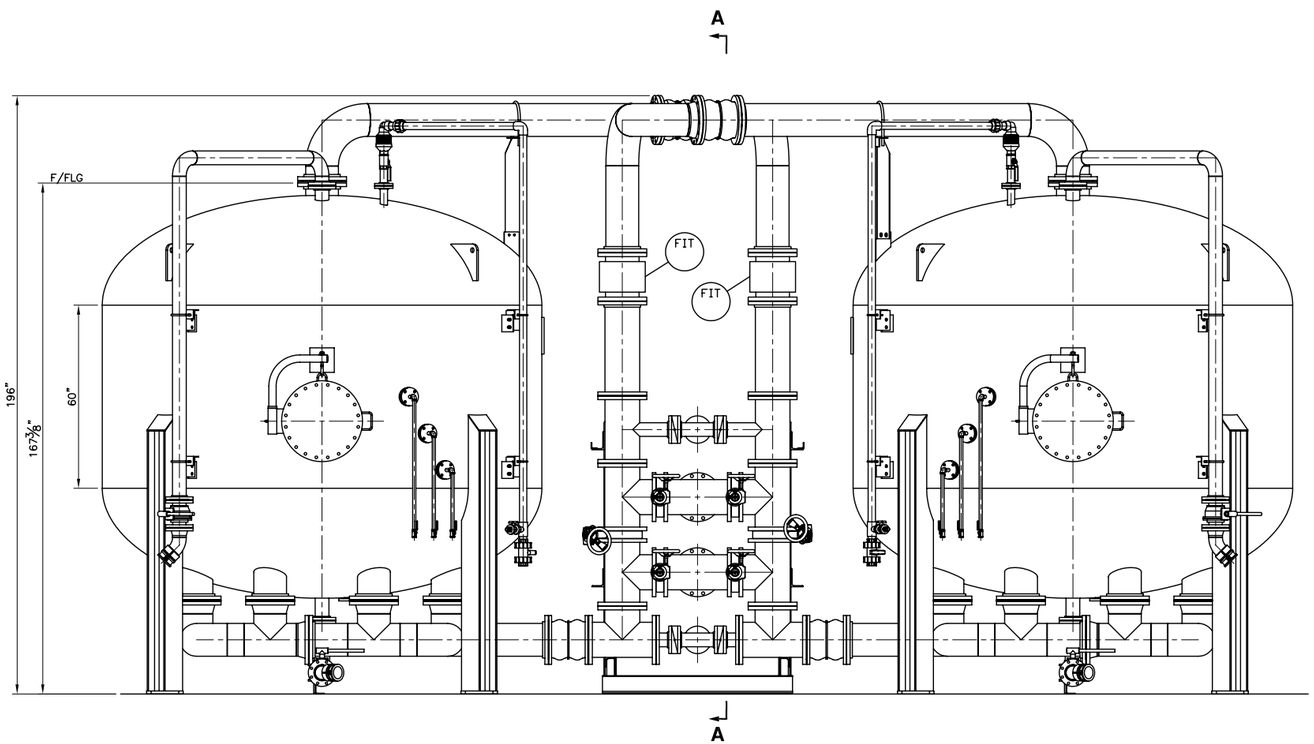

ELEVATION

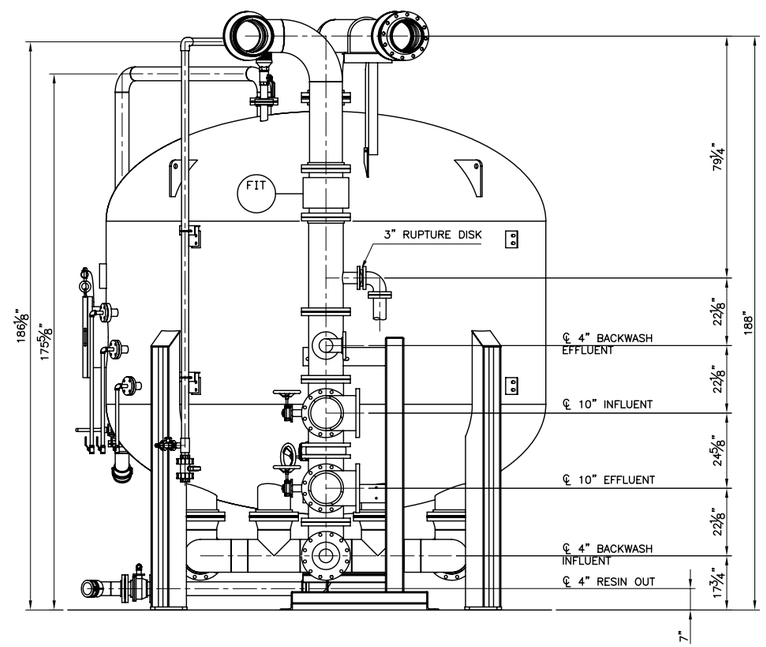

SECTION A-A

THIS DRAWING AND DESIGN IS THE PROPERTY OF CALGON CARBON CORPORATION AND IS NOT TO BE REPRODUCED IN WHOLE OR IN PART NOR EMPLOYED FOR ANY PURPOSE OTHER THAN SPECIFICALLY PERMITTED IN WRITING BY CALGON CARBON CORPORATION. THIS DRAWING LOANED SUBJECT TO RETURN ON DEMAND.

	NAME	DATE
DRAFTER	RES	9/25/06
DESIGNER		
CHECKER		
APPROVAL		
PROJECT No.	P-IX-06166	

REV	DESCRIPTION	APP	DATE

REVISIONS

TOLERANCES (unless otherwise specified)

ANGULAR	±0°30'	DECIMAL (2 PLACES)	±.010
FRACTIONAL	±1/16"	DECIMAL (3 PLACES)	±.005
DECIMAL (1 PLACE)	±.015	DECIMAL (4 PLACES)	±.0005

CALGON

CALGON CARBON CORPORATION

CLIENT: MONK HILLS WELS PASADENA, CA

TITLE: IX RESIN SERVICE MODEL 12 GENERAL ARRANGEMENT

DWG. Size	SHEET No.	SCALE
D	1 OF 1	NONE

DWG. No. GA-003 REV. A

V:\Proposals\IX-IA\2006\P-IX-06166, Monk Hills Wells\Drawings\GA-003.dwg Oct 12, 2006 - 11:19am

APPENDIX F
GAC Specifications

FILTRASORB® 300
Granular Activated Carbon for Municipal Specifications

CALGON
CALGON CARBON CORPORATION

Description

FILTRASORB® 300 is a high activity granular activated carbon developed by Calgon Carbon Corporation for the removal of taste and odor compounds and dissolved organic compounds from drinking water.

This activated carbon is made from selected grades of bituminous coal to produce a high activity, durable granular product capable of withstanding the abrasion associated with repeated backwashing, air scouring, and hydraulic transport. Activation is carefully controlled to produce an exceptionally high internal surface area with optimum pore size for effective adsorption of a broad range of high and low molecular weight organic contaminants. The product is also formulated to comply with all the applicable provisions of the AWWA Standard for Granular Activated Carbon, edition B604-05, the stringent extractable metals requirements of ANSI/NSF Standard 61, and the Food Chemicals Codex.

Specifications

Iodine Number	900 mg/g (min)
Volume Iodine	475 mg/cc (min)
Moisture by weight	2% (max)
Abrasion Number	86 (min)
Effective Size	0.8 - 1.0 mm
Uniformity Coefficient	2.1 (max)
Ash by weight	8% (max)
Apparent Density	0.53 g/cc (min)
Hardness Number	90 (min)
Trace Capacity Number	12 mg/cc (min)
Contact pH	7 (min)
Volume Iodine	475% mg/vol (min)Screen
Size by weight, US Sieve Series	
On 8 mesh	15% (max)
Through 30 mesh	4% (max)

Features	Benefits
Bituminous-based raw material	Provides higher hardness relative to other raw materials reducing the generation of fines and product losses during backwashing. Generates the hardness and abrasion resistance required for thermal reactivation and minimizing generation of fines in operations requiring backwashing.
Coal is pulverized and reagglomerated with suitable binder	Pore structure provides a wider range of contaminant removal capabilities relative to other starting material. Has a high density, wets readily, and does not float, thus minimizing loss during backwash operations. Creates optimal transport paths for faster adsorption.

Bed Expansion

Based on backwashed and segregated bed

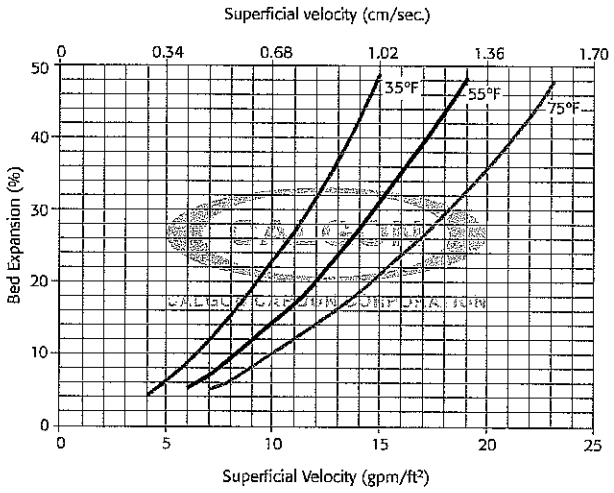

Pressure Drop

Based on backwashed and segregated bed

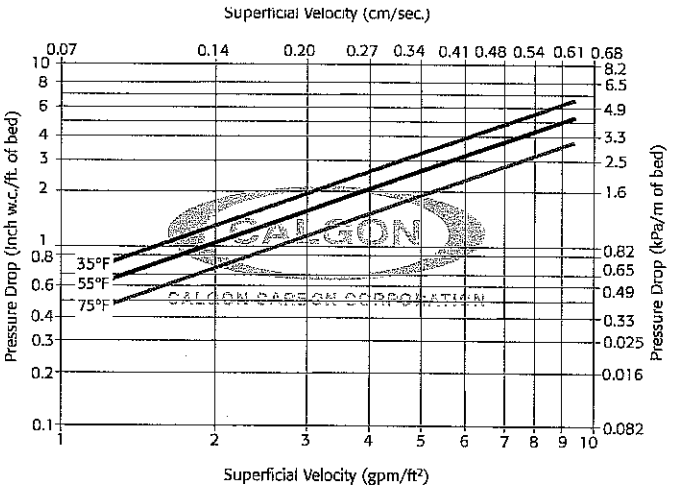

APPENDIX G
GAC Vessels Drawings

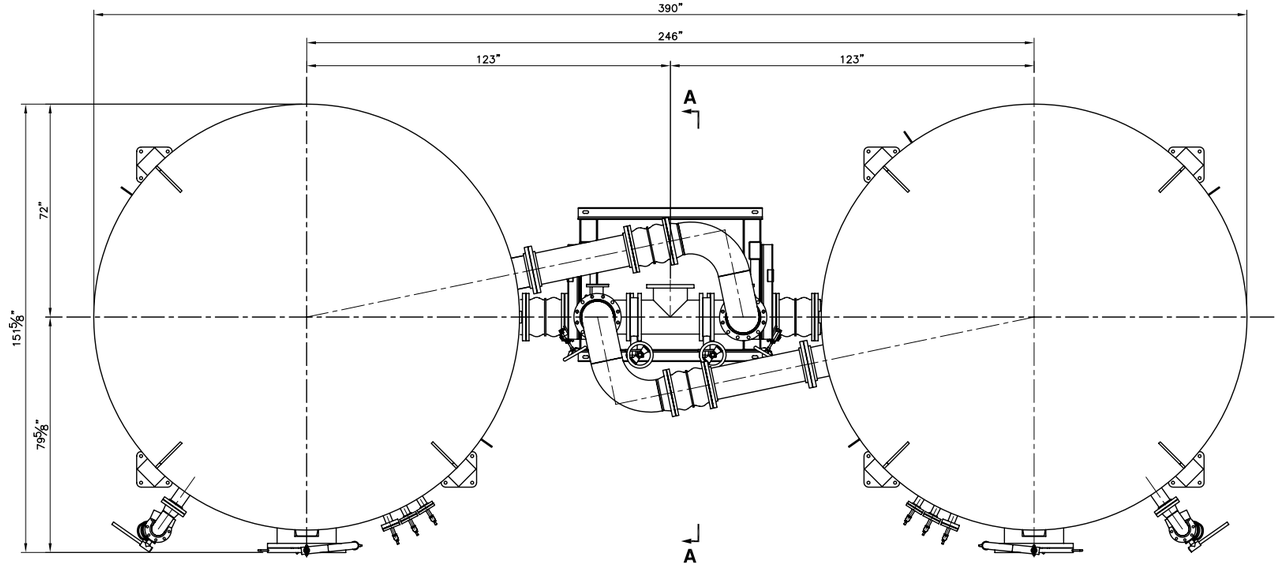

PLAN

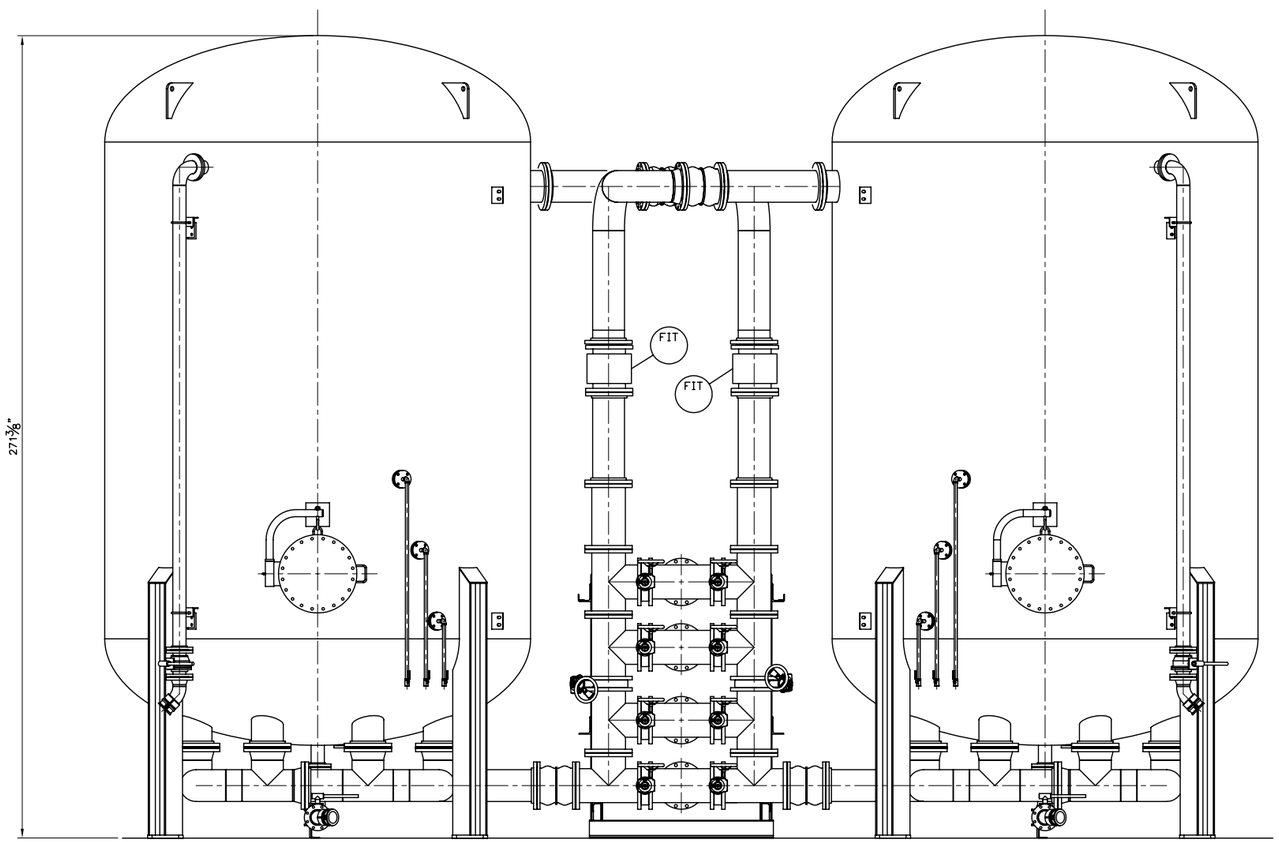

ELEVATION

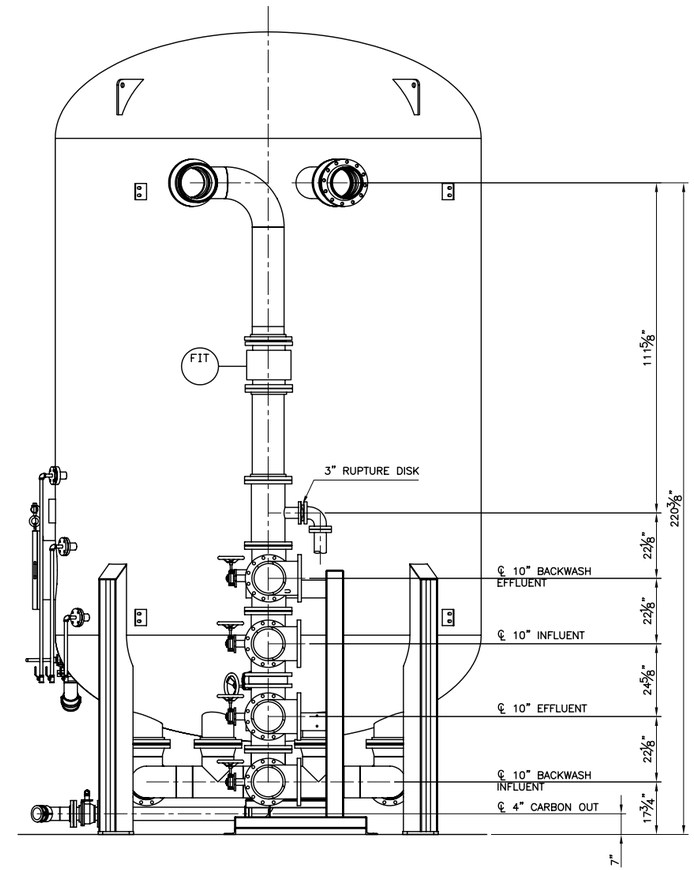

SECTION A-A

REV	DESCRIPTION	APP	DATE

REVISIONS

TOLERANCES (unless otherwise specified)

ANGULAR	±0°30'	DECIMAL (2 PLACES)	±.010
FRACTIONAL	±1/16"	DECIMAL (3 PLACES)	±.005
DECIMAL (1 PLACE)	±.015	DECIMAL (4 PLACES)	±.0005

THIS DRAWING AND DESIGN IS THE PROPERTY OF CALGON CARBON CORPORATION AND IS NOT TO BE REPRODUCED IN WHOLE OR IN PART NOR EMPLOYED FOR ANY PURPOSE OTHER THAN SPECIFICALLY PERMITTED IN WRITING BY CALGON CARBON CORPORATION. THIS DRAWING LOANED SUBJECT TO RETURN ON DEMAND.

	NAME	DATE
DRAFTER	RES	9/25/06
DESIGNER		
CHECKER		
APPROVAL		
PROJECT No.	P-IX-06166	

CALGON

CALGON CARBON CORPORATION

CLIENT: MONK HILLS WELS PASADENA, CA

TITLE: GAC SERVICE MODEL 12 GENERAL ARRANGEMENT

DWG. Size	SHEET No.	SCALE
D	1 OF 1	NONE

DWG. No. GA-004 REV. A

V:\Proposals\IX-IA\2006\P-IX-06166, Monk Hills Wells\Drawings\GA-004.dwg Oct 12, 2006 - 11:21am

APPENDIX H
Windsor Site Drainage Analysis

CIVILTEC
engineering inc.

General Civil, Municipal, Water and Wastewater Engineering, Planning, Construction Management and Surveying
Monrovia Prescott Phoenix Kingman

March 11, 2008

Battelle Environmental Restoration Department
125 Pheasant Run, Suite 115
Newtown, PA 18940

Attention: Carolyn Scala

Subject: Windsor Site Drainage Analysis

Dear Ms. Scala:

Civiltec has reviewed the drainage elements of the Windsor Reservoir site and have determined that existing drainage improvements provided on the site should be improved to accommodate existing and projected runoff loading.

Site Sheet Flow

The total area of the property within the Monkhill Treatment plant is approximately 5.2 acres, 1.4 of which is concentrated on the roof of the Windsor Reservoir. The runoff affected on the Windsor Reservoir is diverted to a separate drainage location and is not computed in the site sheet flow.

Two values of total flow were computed using the time of concentration (TC) calculator developed by the County of Los Angeles County Department of Public Works (LADPW) in accordance with the modified rational method. The initial calculation considered an undeveloped lot (or no improvements). The second calculation considered an improved lot with existing and proposed improvements.

The Windsor site generally consists of relatively compact and impervious soil. Soil classification of the site is designated as 014 (See Figure 1) per LADPW standards or a Romona Sandy Loam. The Romona Sandy Loam is generally well-drained with slow to rapid runoff and moderately slow permeability. The site generally drains from the northeast to the southwest extending approximately 465’ and a grade change of approximately 8.8’ or at an average slope of 0.019 percent. Due to its close proximity to the San Gabriel mountains the site experiences relatively high rain intensities, a final 50 year 24 hour rain intensity of 8.5 inches was interpolated from the Isoheyt contour map (Figure 1) provided by LADPW.

Figure 1 - Pasadena 50-Yr 24-Hr Isohyet and Soil Classification

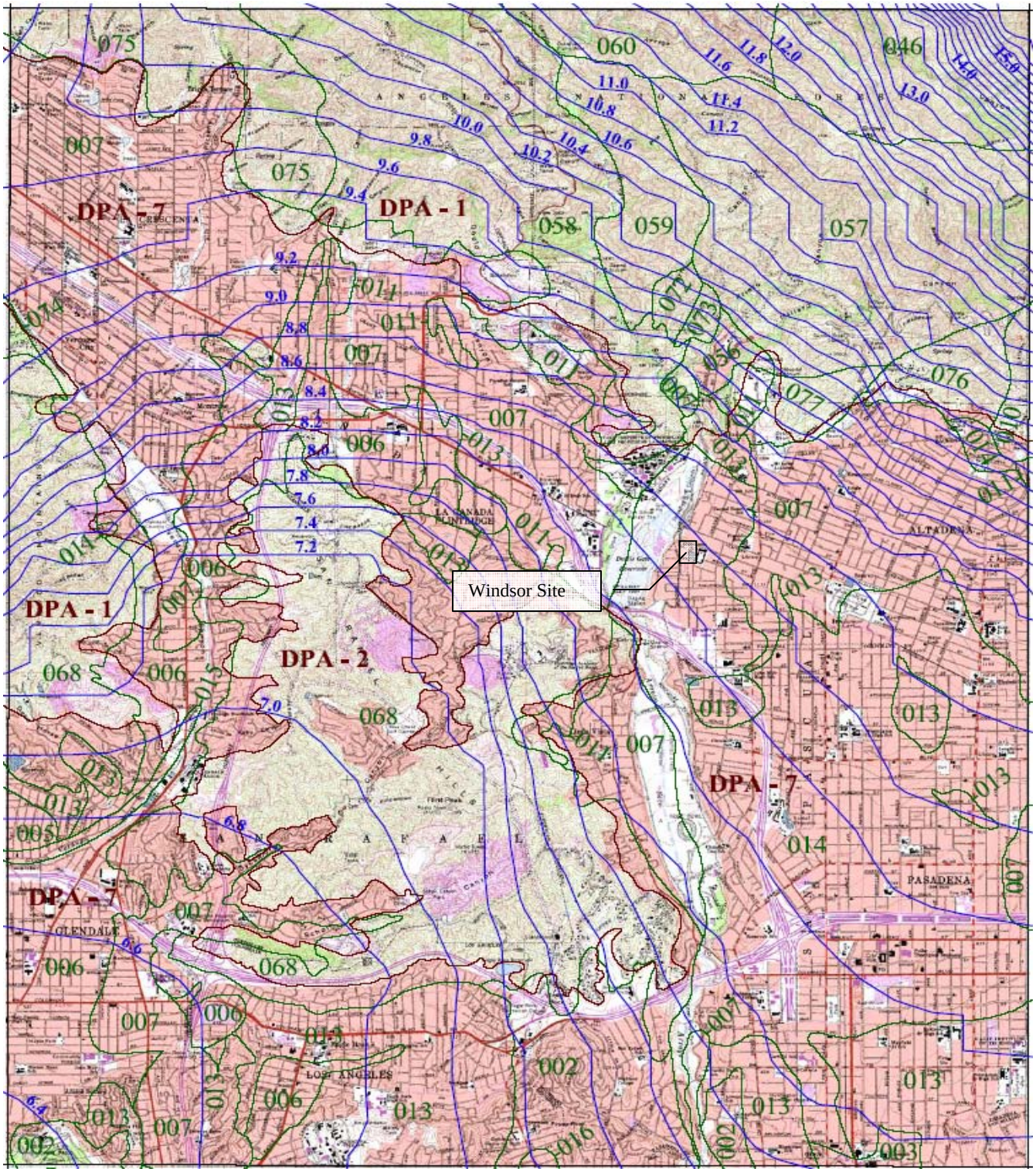

Unimproved Site

Civiltec reviewed the runoff potential considering an unimproved site for a 50 year 24 hour storm. The total area of the site to be drained to the existing swale is 3.8 Acres. This excludes the roof area of the Windsor Reservoir. The site was considered to be 0% impervious. The TC calculator was utilized to perform the runoff calculation. The total runoff for the site under these conditions is approximately 16.38 cfs (See Figure 2):

Figure 2 - Unimproved Site Runoff Calculation

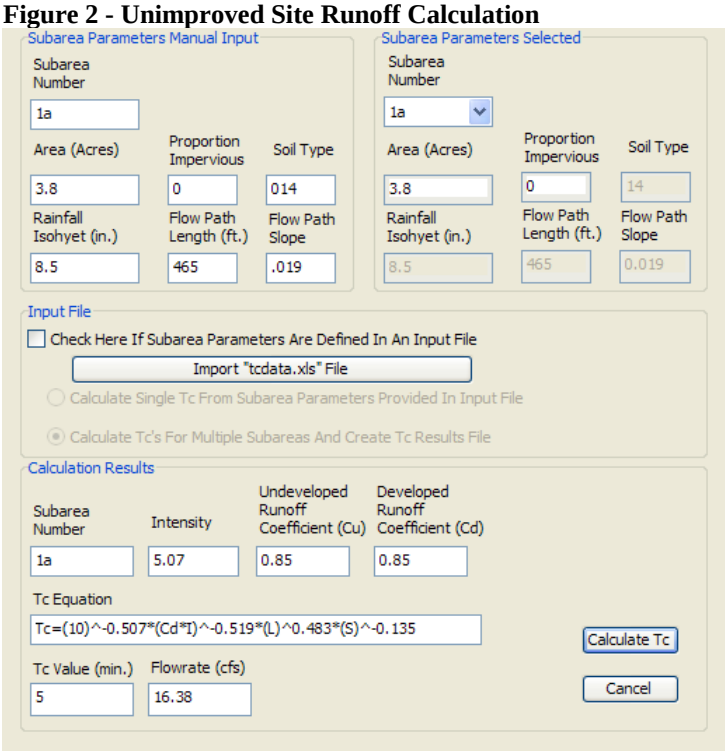

All drainage excluding the roof area of the reservoir is diverted through an existing concrete triangular swale ("V" Ditch, See Figure 3) on the south side of the site. The ditch has a total depth of 1.5 feet and a top width of 3 feet and runs approximately 235' along the south western portion of the property line abutting the existing fence. The swale slopes gradually from east to west along this alignment with an average slope of 0.0035 percent. The swale daylights in Windsor Avenue underneath the existing fence and discharge from the site is directed down Windsor Avenue to the nearest storm drain.

Figure 3 - Existing Concrete Swale

All drainage excluding the roof area of the reservoir is diverted through the concrete "V" ditch on the south side of the site. Using Manning's equation (See Figure 4) and under 16.38 cfs of flow the ditch would theoretically experience a water depth of 1.81', though the max depth of the existing ditch is only 1.5' deep. As a result under unimproved conditions the ditch is expected over flow.

Figure 4 - Normal Water Depth in Ditch (Unimproved Site)

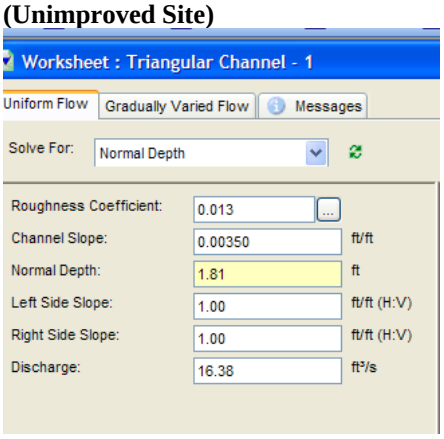

Improved Site (Existing and Proposed)

The total runoff with existing and proposed impervious area is approximately 16.57 cfs (See Figure 5). Impervious areas include: existing asphalt, pressure reducing valve pad, two transformer pads, control bldg, aluminum shed, and sand box; as well as the proposed improved areas including: the treatment pad, the access ways, and chloramination building. The percent impervious area for the site was determined to be near 25%.

Figure 5 - Improved Site Runoff Calculation

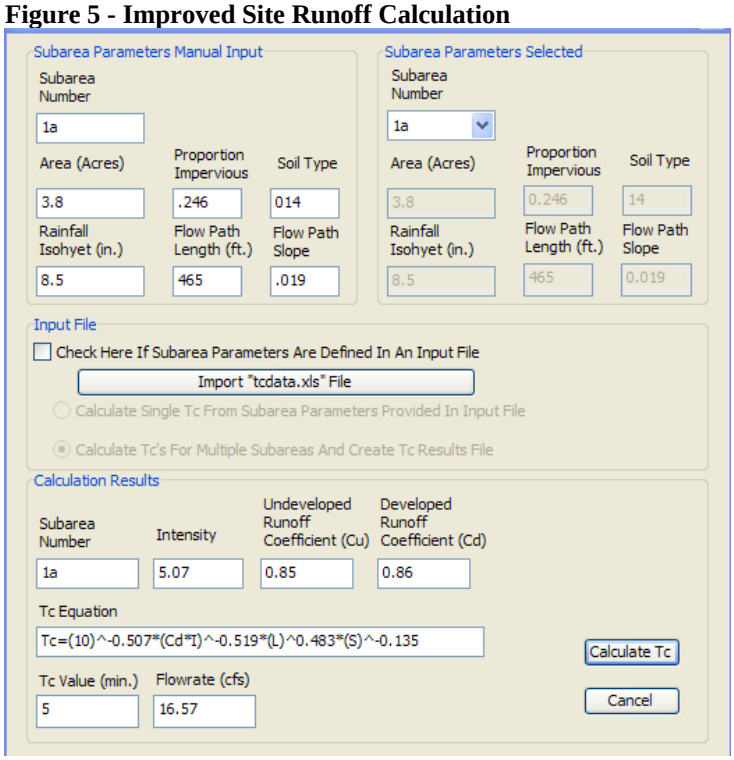

As a result of the proposed improvements site runoff is expected to increase from 16.38 cfs to 16.57 cfs or a 1.2% increase. This equates to an additional 85 gpm load on the existing swale.

Again all drainage excluding the roof area of the reservoir is diverted through the concrete "V" ditch on the south side of the site. Using Manning's equation (See Figure 6) and under 16.57 cfs of flow the ditch would theoretically experience 1.81' of water depth. Moreover no increase in

Figure 6 - Normal Water Depth in Ditch (Improved Site)

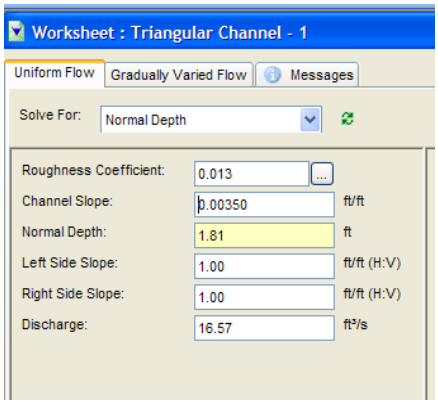

water depth is expected under proposed conditions as compared with unimproved conditions.

Conclusion

Although with proposed improvement to the site only add minimal total flow, the current configuration is not sufficient enough to divert storm flow. A new ditch or swale is recommended to adequately handle a 24 hour, 50 year storm.

A trapezoidal ditch can be used to replace a portion of the old drainage ditch. As the ditch is subject to sheet flow only the western most reaches of the ditch will be loaded with runoff flows near 16.57 cfs. As a result approximately 65' of the eastern portion of the existing V-Ditch will be maintained in place. The northern wall from this point west would be removed and a slight taper in this wall would be added over a 100' length to create a total bottom width of 1.5'. The remaining 65' of ditch will be modified to be a trapezoidal ditch with 1.5' of bottom width, 4.5' of top width, and 1.5' of total depth. The ditch would expand off the existing ditch and would require that some excavation and demolition be performed. The southern wall of the ditch can be maintained while the northern wall is demolished along the portion described. The curb outlet to the street would also need to be modified and upsized to accommodate the loading.

Figure 7 - Trapezoidal Ditch Normal Depth

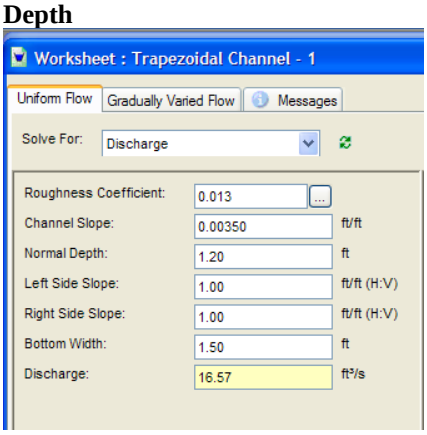

At the current flow value of 16.57 cfs the trapezoidal ditch will experience 1.19 ft (See Figure 7) of normal depth or will be flowing at 71% capacity.

Considering landscape improvements and other improvement proposed on site it is anticipated that the modifications to the ditch as explained are appropriate. The cost of the improvements to the drainage swale is estimated to be near $9,500 including a 10% contingency (See Table 1).

Table 1 - Probable Cost of Improvements

				Engineers Estimate	
ITEM	**QUANTITY**	**UNIT**	**DESCRIPTION**	**UNIT PRICE**	**TOTAL PRICE**
1	165	LF	Demolish Existing Northern Swale Wall	$ 7.50	$ 1,237.50
2	18	CY	Site Cut & Fill	$ 30.00	$ 540.00
3	4	CY	Install Northern Swale wall 3" Thick	$ 880.00	$ 3,080.00
4	2	CY	Install Swale Bottom Concrete 3" Thick	$ 850.00	$ 1,700.00
5	1	LS	Modification to Curb Oulet	$ 2,000.00	$ 2,000.00
			TOTAL BASE BID		**$ 8,557.50**
			10% CONTINGENCY		$ 855.75
			TOTAL BASE BID PLUS CONTINGENCY		**$ 9,413.25**

If you should have any questions please feel free to contact Mr. Shem Hawes at (626) 357-0588 or by way of e-mail at shawes@civiltec.com.

Very truly yours,

CIVILTEC engineering, inc.

C. Shem Hawes, P.E.
Project Engineer

CSH:WDB:r

X:\2007\27140-JPL Monkhill Treatment Plant\Documents\Letters\Runoff Routing.doc

APPENDIX I
Conditional Use Permit Staff Report

HEARING OFFICER
STAFF REPORT
July 10, 2008

SUBJECT: Conditional Use Permit #5057

LOCATION: 2696 Windsor Avenue

APPLICANT: Pasadena Water and Power

ZONING DESIGNATION: PS (Public and Semi-Public)

GENERAL PLAN DESIGNATION: Institutional

CASE PLANNER: Lanny Woo

STAFF RECOMMENDATION: 1) Adopt the Mitigated Negative Declaration and Initial Study (Attachment A); 2) Adopt the Mitigation Monitoring and Reporting Program (Attachment B); 3) Direct staff to file a Notice of Determination (Attachment C); and 4) Adopt the Specific Findings in Attachment D to approve the Conditional Use Permit application with the attached conditions as shown in Attachments E, F, G, H, I, and J.

PROJECT PROPOSAL: Conditional Use Permit - To allow the construction, installation, and operation of a water treatment system to treat groundwater (Major Utility) from the Monk Hill Wells.

ENVIRONMENTAL DETERMINATION: Pursuant to the California Environmental Quality Act (CEQA), the CEQA Guidelines, and the City's CEQA Guidelines, an Initial Study was prepared for the proposed project (Section 21080 of the Public Resources Code of the State of California). The Mitigated Negative Declaration and Initial Study were submitted to the State Clearinghouse for review, with a review period of 30 days. The Initial Study has determined that the proposed project will have less than significant environmental impacts with the incorporation of the proposed Mitigation Measures; therefore, a Mitigated Negative Declaration is recommended. The required 30-day public review period began on June 10, 2008 and ends on July 10, 2008.

BACKGROUND:

Site characteristics: The project site is located on the east side of Windsor Avenue (2696 Windsor Avenue), just north of the Lehigh and Kent Streets intersection. The site is approximately 6.28 acres in size, and houses an existing 66,600-square foot water reservoir (Windsor Reservoir) with a capacity of 4.75 million gallons of water. Also on site is a sand box structure attached to the reservoir, Windsor Well, several power transformer banks, three buildings, a pressure reducing station, and other supporting infrastructures. There are

two access points on the north and south side along Windsor Avenue. The site is monitored by several security cameras. Along the perimeter of the property is an existing chain-linked fence with barbed wire. Currently on the site are 61 trees, 12 trees are outside of the fence. Eleven trees were removed due to safety reasons and disease (root crown decay) of the trees. These trees were reviewed and recommended for removal by the Urban Forestry Advisory Committee (UFAC).

Adjacent Uses:
- North – Single-family Residential (Unincorporated Los Angeles County) and Multi-family Residential (Unincorporated Los Angeles County)
- South – Single-family Residential
- East – Treatment and Education Center and an in-residence treatment home (Five Acres Boys' and Girls' Aid Society Treatment and Education Center in Unincorporated Los Angeles County)
- West – Single-family Residential

Adjacent Zoning:
- North – R-1 (Single-family Residential, Unincorporated Los Angeles County)
- South – RS-4 (Single-family Residential, 0-4 lots per acre) and RS-1 (Single-family Residential, Unincorporated Los Angeles County)
- East – RS-1 (Single-family Residential, Unincorporated Los Angeles County)
- West – RS-4 (Single-family Residential, 0-4 lots per acre)

Previous zoning cases on this property: None

In the early 1980s, analyses of groundwater from the four Pasadena Water and Power (PWP) water supply wells, Arroyo Well, Well 52, Ventura Well, and the Windsor Well (also known as the Monk Hill Wells) revealed the presence of volatile organic compounds (VOCs). As a result of continued monitoring, these wells were shutdown in the late 1980s by the Department of Public Health (DPH). The four wells pump groundwater from an aquifer known as the Monk Hill Basin. In 1990, the National Aeronautics and Space Administration (NASA) funded the installation of a temporary air stripping system intended to remove contaminants from the wells and resume groundwater production from the four wells. The air stripper system was located on the eastern edge of the Devil's Gate Reservoir. Treated water from the system was pumped to the Windsor Reservoir at 2696 Windsor Avenue.

In 1997, the Arroyo Well was shutdown due to high levels of perchlorate (a chemical used in the production of solid rocket propellant) that exceeded the Department of Public Health's (DPH) recommended maximum level of 18 parts per billion (ppb)for drinking water. In January 2002, a lower provision for perchlorate was established by the DPH. This provision lowered the recommended maximum level from 18 ppb to 4 ppb. This resulted in the closure of the three remaining wells. Since then, the four wells have remained off-line. The temporary air stripping equipment was removed in 2006 with the goal of replacing it with more efficient and effective technology and integrating it with a treatment system for removal of perchlorate.

PROJECT DESCRIPTION:

The applicant, Pasadena Water and Power (PWP), has filed a Conditional Use Permit application to allow for the construction, installation, and operation of an ion exchange (IX) and a liquid granular activated carbon (LGAC) treatment system to treat groundwater from four water supply wells (Arroyo Well, Well 52, Ventura Well, and Windsor Well and collectively referred to as the Monk Hill Wells). Groundwater extracted from these wells will first be treated using ion exchange to remove perchlorate followed by the liquid granular activated carbon filter system to remove volatile organic compounds (VOCs). The treated water will be disinfected with chloramines, a blend of gas chlorine plus ammonium hydroxide prior to storing in the Windsor Reservoir for distribution.

Extracted groundwater from the Arroyo Well, Well 52, and Ventura Well would be pumped to an existing sump near Ventura Well using existing 12 and 16-inch pipelines. Extracted groundwater from the Windsor Well would be either be pumped to the existing sump using an existing 12-inch pipeline or pumped directly to the proposed treatment system. In the latter scenario, the groundwater from Windsor Well will join water from the sump at a point located in the northern portion of the Windsor Reservoir site. The combined flow will then be directed to the treatment system (heading south) through a new 24-inch steel pipeline. Finally, the water would be treated through the ion exchange and liquid granular activated carbon system, then disinfected, piped to Windsor Reservoir, and distributed to the customers.

A CUP is required for the establishment, expansion of a Major Utility as defined by the Zoning Code.

ANALYSIS:

At the subject site is an existing water reservoir, which provides water to the City of Pasadena and Unincorporated Los Angeles County. Currently, the reservoir is non-operable. Water reservoirs and water treatment plants fall within the Zoning classification of a Major Utility. Approval of a Conditional Use Permit is required in order to allow for the expansion of such uses. The Conditional Use Permit process allows the City to review projects to determine if they are compatible with their surroundings and require that they adhere to specific conditions related to construction, operation, appearance, etc. In order to approve the Conditional Use Permit, six specific findings (Attachment D) must be made in the affirmative. These findings relate to the project meeting the intent and purpose of its Zoning District and the Zoning Code.

Pasadena Water and Power is proposing an IX and LGAC water treatment system that will be placed on a new concrete pad of approximately 12,500 square feet. The pad would be located on the south central portion of the project site approximately 61 feet from Windsor Avenue. The proposed IX, LGAC, and disinfection system will be located approximately 122 feet to the northern property line and 95 feet to the southern property line. A new paved access road will be constructed around the proposed concrete pad and water treatment system. The access road will start at the existing south gate, loop around the concrete pad, and then north to where it joins the existing paved road and north access gate. Currently, a part of the fence on the west site of PWP property on Windsor Avenue is covered with shrubs. The entranceway of the south gate will be designed to provide safer ingress and egress for service vehicles.

The proposed ion exchange (IX) treatment system will consist of four pairs of steel vessels, each measuring approximately 12 feet in diameter and 16 feet in height. Each of the IX tanks will contain 300 to 400 cubic feet of resin media used for the removal of perchlorate. The LGAC

consists of five pairs of steel tanks, each measuring approximately 12 feet in diameter and 23 feet in height. Each LGAC tank will contain approximately 40,000 pounds of carbon media. The IX and LGAC will be operated in a lead and lag configuration. This operation permits water quality protection and isolation of vessels during maintenance. To compensate for the pressure loss due to the change in elevation of the distribution system and drop in pressure across the vessels and along the associated piping, valve and fittings, three new electrical booster pumps will be installed off-site at the former location of the VOC treatment plant, near Ventura Well.

A disinfection system will be added as the last stage of water treatment. The proposed disinfection system will be located on the north side of the proposed treatment plant. Access to the disinfection system will be along the proposed access road. The disinfection system will consists of chloramines, a blend of gas chlorine and ammonium hydroxide. The ammonium hydroxide will be stored in a single cylindrical vessel. The gas chlorine will be stored in pressurized steel cylinders weighing 200 to 300 pounds per cylinder, with up to a maximum of 16 cylinders being utilized on the site. The ammonium hydroxide tank is approximately 8 to 10 feet in diameter with a 2,000 gallon capacity. Both gas chlorine and ammonium hydroxide will be stored in a new secured building that is approximately 1,350-square feet by 12 to 18 feet in height.

To screen the view of the treatment system from Windsor Avenue, a row of trees along with shrubs (10-12 foot high at maturity) will be planted on the western perimeter of the site. Shrubs are also proposed for the northern (7-8 foot high at maturity) and southern (10-12 foot high at maturity) boundaries of the site. A green screen is proposed for the south access gate and the fence on Windsor Avenue. To help the water treatment plant blend in with the existing view and the natural environment, a light color green is proposed for the tanks, piping, and equipment.

In addition to the treatment system installation, four groundwater water wells (Arroyo Well, Well 52, Ventura Well, and Windsor Well) will need to be rehabilitated to conform with the appropriate flowrates. Electrical replacement and upgrades will be performed at each of the wells. A new transformer will be installed to the south of the Arroyo Well. During rehabilitation of these wells, the access roads to Arroyo Well, Well 52, and Ventura Well may be temporarily or partially restricted by the use of heavy equipment. The initial well cleaning may take two weeks or more at each well. Final well development and performance testing will be conducted prior to the startup of the treatment system.

Due to the project's proximity to residential, traffic issues are common concerns. A temporary increase in traffic may occur during well rehabilitation and construction related activities. These activities include replacing 50 to 75 feet section of existing pipeline in front of Arroyo Well along the Windsor Avenue extension road. Depending on the result of the pipeline pressure testing, additional pipelines along Windsor Avenue may require replacement; however, based on the initial investigation employing video logging of existing pipelines, the likelihood of pipeline replacement along Windsor Avenue is limited. Other traffic related activities may include improvements along the public right-of-way of Windsor Avenue and the west property line of the proposed project site. Such improvements will occur between the hours allowed by the City's Hours of Construction Ordinance. To reduce these impacts to a minimum, a Construction Staging and Management Plan, and a Construction Route Plan is required to be submitted to the Public Works Department and Transportation Department, respectively for review and approval prior to issuance of any building permit.

The project has been reviewed by several City Departments, including Public Works Department, Department of Transportation, Fire Department, Building Division, Power Division,

and the Water Division. Their conditions have been attached to this report along with staff's conditions. The request to construct a water treatment plant on the existing site of the Windsor Well and Windsor Reservoir to remove contaminants in the City's water supply and meet water demands of the immediate region will not lead to a negative impact to the surrounding properties. It is therefore staff's assessment that the findings for the Conditional Use Permit can be made and recommends approval of the application with the attached conditions of approval.

Tree Removal. Prior to construction, the applicant is proposing to remove two trees, a Quercus ilex (Holly Oak) and an Eucalyptus sideroxylon (Red Ironbark), on the central portion of the project site to accommodate the proposed access road and concrete pad for the new water treatment system. These two trees are designated as public trees as they are on city owned property. As stipulated by the City's Tree and Tree Protection Ordinance, the removal of any public trees must be presented to the Urban Forestry Advisory Committee (UFAC) for a recommendation for removal. A recommended condition of approval would require that the applicant goes through UFAC prior to the approval of the Building Permit.

Neighborhood Meeting. On June 23, 2008, a neighborhood meeting was held at the Altadena Community Center. Notices were mailed to residents within a 500-foot radius of the Windsor Reservoir boundary area. Notices were also mailed to approximately 19,000 residents of Altadena (Unincorporated Los Angeles County) and City residents outside of the 500-foot radius zone. The purpose of the meeting was to provide information on the proposed water treatment plant and improvements on the project site. Approximately 21 residents were present at the meeting. On July 2, 2008, a meeting was held with residents in the community adjacent to the Windsor Reservoir site. Three residents were present at this meeting, including Sussy Nemer, Senior Deputy for Supervisor Michael D. Antonovich Fifth District Office. The purpose of the meeting was to inform residents of the landscaping that will be provided for screening of the water treatment plant.

GENERAL PLAN CONSISTENCY:

The operation of the Windsor Reservoir (Major Utility Use) is consistent with the General Plan, adopted in 1994. The General Plan Land Use Element Objective 18 calls to improve the quality of the environment for Pasadena and the region. The proposed water treatment system will be consistent with Land Use Element Policy 18.4, which requires staff to coordinate with local, regional, State and federal agencies to continue and define appropriate standards to improve water quality. The proposed project is also consistent with Land Use Element Policy 7.4 (Infrastructure Improvements) which encourages implementation of capital improvements that will maintain or rehabilitate infrastructure including the improvements of related to upgrading the water supply system. In addition, the project reinforces the United Nations Urban Environmental Accords Action 20 *Protect the ecological integrity of the City's primary drinking water sources.* In that the City receives 40% of its water supply from local groundwater supplies, treatment of this water source is critical to meet the drinking water requirements of DPH. The proposed project is necessary to restore use of these productions wells (Arroyo Well, Well 52, Ventura Well, and Windsor Well) to meet potable water demands for the City and its residents.

CONCLUSION:

Based on the analysis presented in this report, staff concludes that the findings for approval of the Conditional Use Permit to allow for the construction, installation, and operation of a water treatment system at the existing Windsor Reservoir (Major Utility) site can be made. Currently

the site includes a water well and reservoir and the proposed water treatment system is intended to improve the quality of water and serve the City's water customers. The proposal is not intended to change the operation of the reservoir. As proposed, the on-site improvements will be screened from the public right-of-way and from the adjacent properties with landscaping and a green screen. The project reinforces the United Nations Urban Environmental Accords Action 20; protect the ecological integrity of the City's primary drinking water sources, in that the City receives 40% of its water supply from local groundwater supplies, treatment of this water sources is critical to meet the drinking water requirements of DPH. The proposed project is necessary to restore use of these productions wells (Arroyo Well, Well 52, Ventura Well, and Windsor Well) to meet potable water demands for the City and its residents. As such, staff recommends approval of the application with the findings in Attachment D and with the conditions of approval in Attachments E, F, G, H, I, and J.

ATTACHMENTS:

Attachment A – Mitigated Negative Declaration and Initial Study
Attachment B – Mitigation Monitoring Reporting Program
Attachment C – Notice of Determination
Attachment D – Specific Findings for Conditional Use Permit #5057
Attachment E – Conditions of Approval for Conditional Use Permit #5057
Attachment F – Department of Public Works Conditions of Approval
Attachment G – Department of Transportation Conditions of Approval
Attachment H – Fire Department Comments and Conditions of Approval
Attachment I – Pasadena Water Division Conditions of Approval
Attachment J – Pasadena Power Division Conditions of Approval

Attachment A

City of Pasadena
Planning Division
175 N. Garfield Avenue
Pasadena, California 91101-1704

DRAFT MITIGATED NEGATIVE DECLARATION

PROJECT TITLE: Monk Hill Treatment System at 2696 Windsor Avenue, Conditional Use Permit #5057

PROJECT APPLICANT: Pasadena Water & Power

PROJECT CONTACT PERSON: Gary Takara

ADDRESS: 150 South Los Robles Avenue, Suite 200, Pasadena, CA 91101

TELEPHONE: (626) 744-3729

PROJECT LOCATION: 2696 Windsor Avenue
East side of Windsor Avenue, just north of the Windsor Avenue/Lehigh Street/Kent Street intersection.
City of Pasadena, County of Los Angeles, State of California

PROJECT DESCRIPTION: The applicant, Pasadena Water and Power, has filed a Conditional Use Permit application to allow for the construction, installation, and operation of an ion exchange (IX) and a liquid granular activated carbon (LGAC) treatment system to treat groundwater from the four water supply wells - Arroyo Well, Well 52, Ventura Well, and Windsor Well. Groundwater extracted from these wells will be treated using IX to remove perchlorate, LGAC to remove volatile organic compounds (VOCs), and will be disinfected with chloramines consisting of gas chlorine and ammonium hydroxide prior to storing the drinking water in the Windsor Reservoir. The proposed treatment technology is approved by the Department of Public Health (DPH) and used at numerous locations in Southern California for drinking water application. A Conditional Use Permit is required to allow the expansion of a major utility.

FINDING

On the basis of the initial study on file in the Department of Planning and Development:

_____ The proposed project COULD NOT have a significant effect on the environment.

__X__ The proposed project COULD have a significant effect on the environment, however there will not be a significant effect in this case because the mitigation measures described in the Mitigation Monitoring Program on file in the Planning Division Office were adopted to reduce the potential impacts to a level of insignificance.

_____ The proposed project MAY have a significant effect on the environment, and an ENVIRONMENTAL IMPACT REPORT is required.

The Initial Study which provides the basis for this finding is on file and available for review at the City of Pasadena, Department of Planning and Development, Community Planning Section, 175 North Garfield Avenue, Pasadena, CA 91101-1704

Completed by:	Determination Approved:
Title:	Title:
Date:	Date:

PUBLIC REVIEW PERIOD: June 10, 2008 – July 10, 2008
COMMENTS RECEIVED ON DRAFT: ____ Yes ____No
INITIAL STUDY REVISED: ____ Yes ____No

nd-mnd.doc

Mitigation Measures for
Conditional Use Permit #5057
2696 Windsor Avenue

Aesthetics

Mitigation Measure 3-1: The views of the proposed Treatment System from Windsor Avenue and surrounding residences shall be screened to the satisfaction of the Director of Planning and Development. Said screening shall minimally be provided in the form of landscaping at the site. Minimally, site landscaping shall include planting a row of trees with wide canopies along a line just to the east of the fence located on the western border of the site, as well as a row of 5-foot high (at maturity) shrubs planted in front of the tree row to screen the view at lower heights. At the discretion of the Director of Planning and Development, a "Green Fence" to screen the view of the treatment plant shall also be utilized (an example of this screen is located at 888 Walnut Street, in Old Town Pasadena). Likewise, at the discretion of the Director of Planning and Development, a privacy cloth on the border fence shall also be utilized to screen views from the street.

Mitigation Measure 3-2: To the satisfaction of the Director of Planning and Development, and considering any public comment received ~~at the project's Design Commission hearing~~ during the project's CEQA public review period, all the exposed tanks, piping, equipment, and disinfection facility shall be a neutral (or earth-toned) color to help the Treatment System blend with the existing view. Prior to commencing painting, a paint color palette shall be submitted to the Director of Planning and Development for review and approval ~~and to ensure the Design Commission's applicable conditions of approval are satisfied~~ as part of the City's Design Review process. The Design Review process for the proposed project is a staff-level review that culminates in a decision made by the Director of Planning and Development. This decision may be appealed or called for review as provided in the City's Zoning Code.

Biological Resources

Mitigation Measure 6-1: The vegetated area to the south of the proposed pipeline alignment shall be avoided. Construction of the proposed pipeline extension shall be confined to the existing Windsor Avenue extension footprint and surrounding disturbed/maintained land.

Mitigation Measure 6-2: Clearing, grubbing, and/or removal of vegetation within or adjacent to the Arroyo Seco Master Plan Area shall be conducted outside the nesting bird season, which runs from April 15 to August 1. Any grubbing and/or removal of vegetation during the nesting bird season (April 15 to August 1) will require a nesting survey performed by a qualified biologist at least one (1) week prior to the activity and weekly thereafter. If discovered, all active nests shall be avoided and provided with a buffer zone of 300 feet (500 feet for all raptor nests) or a buffer zone that otherwise meets the minimum requirements of the California Department of Fish and Game. Once buffer zones are established, work shall not commence/resume within the buffer until a qualified biologist confirms that all fledglings have left the nest, which would likely not occur until the end of the nesting season.

Cultural Resources

Mitigation Measure 7-1: If archaeological resources are encountered during project construction, all construction activities in the vicinity of the find shall halt until an archeologist

certified by the Society of Professional Architects examines the site, identifies the archaeological significance of the find, and recommends a course of action. Construction in the vicinity of the find shall not resume until the site archaeologist states in writing that the proposed construction activities will not significantly damage archaeological resources.

Hazards and Hazardous Materials

Mitigation Measure 10-1: The process involving chlorine gas will be designed in accordance with the recommendations of the Chlorine Institute and the American Water Works Association (AWWA). Some details of the recommended design criteria that will be incorporated into PWP's chlorine process include the following:

- The chlorine room will be provided with an adequate ventilation system consisting of an exhaust fan and intake louvers. Ventilation in chlorine storage rooms will be capable of 60 air changes per hour. The exhaust fan will be energized by an automatic door switch and a manual switch outside of the door that simultaneously open an air intake damper. Ventilation air will be introduced at the ceiling and exhausted at floor level because chlorine gas is heavier than air.

- Chlorine rooms will have access to the outside. A fixed glass viewing window will be included in an inside wall to check for leaks before entering the room.

Mitigation Measure 10-2: The structure that houses the chlorine process will be equipped with state of the art leak detectors that can sense a chlorine leak as small as 1 part per million (ppm) in air. The leak detection system will be interlocked with the City's telemetry system that will provide an alarm via telephone or pager to an on duty water operator.

Mitigation Measure 10-3: PWP will pre-coordinate emergency response activities with the local emergency responders (Pasadena Fire Department and the LA County Hazardous Materials Response Team).

Mitigation Measure 10-4: The facility will include advanced warning systems that will alert PWP personnel of a chemical leak so that emergency responders, including the Pasadena Fire Department, can respond on scene ~~as quickly as possible~~ in the event of an emergency. If a leak occurs that could affect Five Acres School, the responders will make public notifications including to the Five Acres School.

Hydrology and Water Quality

Mitigation Measure 11-1: To the satisfaction of the City of Pasadena Department of Public Works, storm flows from the improved project site during ~~a 50-year, 24-hour~~ the Urban Flood storm, shall not exceed the capacity of onsite drainage facilities. Based on preliminary drainage analyses conducted by Civiltech Engineering, Inc.'s (*Windsor Site Drainage Analysis* dated March 11, 2008) improvements to the existing drainage swale on the southern boundary of the Windsor Reservoir Site and the corresponding curb outlet would be required to handle storm flows from a 50-year, 24-hour storm. Specifically, Civiltech Engineering, Inc.'s *Windsor Site Drainage Analysis* dated March 11, 2008, identified that built-scenario stormwater flows would be 16.57 cubic feet per second (cfs), which could be accommodated by converting the western 65 feet of the onsite swale to a trapezoidal ditch with a bottom width of 1.5 feet, a top width of 4.5 feet, and a total depth of 1.5 feet. The need for and specific type of drainage improvements shall be determined during final engineering and shall be subject to the review and approval of

the City of Pasadena Department of Public Works.

Noise

Mitigation Measure 14-1: The proposed project shall adhere to the noise restriction requirements of PMC Section 9.36.100. Noise generated by booster pumps shall be damped with acoustical treatments in a manner that prevents the ambient noise level at the nearest property line from increasing by more than 5 decibels above ambient levels. To ensure this requirement is met, all acoustical treatments shall be designed by an acoustical engineer, or equivalent professional meeting the satisfaction of the City of Pasadena Director of Planning and Community Development. In addition, ambient noise levels at the nearest property line shall be measured both pre- and post-construction to ensure that noise from booster pumps do not result in a greater than 5 decibel increase to the ambient noise level at the property line. If the booster pumps are determined to result in a greater than 5 decibel increase to the ambient noise level at the property line, additional noise reduction treatments shall be designed and installed to the satisfaction of the City of Pasadena Director of Planning and Community Development.

Mitigation Measure 14-2: Air compressors used onsite to replace spent media shall be equipped with properly operated mufflers that meet the manufacturer's specifications.

Mitigation Measure 14-3: For utilizing feed (booster) pumps potential vibrations shall be attenuated to the satisfaction of the City of Pasadena Director of Planning and Development with shock absorbers and proper design and alignment.

Transportation/Traffic

Mitigation Measure 18-1: Delivery of construction equipment (i.e., mobilization) to the Windsor Reservoir site for the Monk Hill Treatment System project shall not occur while roofing materials are being delivered for the Windsor Reservoir Seismic Retrofit project.

Mitigation Measure 18-2: To maintain pedestrian, equestrian, and bicycle access along Karl Johnson Parkway (access road along the east side of the spreading basins) during construction on the Ventura Well and Well 52 sites, equipment shall be staged such that at least four (4) horizontal feet of pavement remains unobstructed. This can likely be accomplished by staging all equipment inside the site's fence or, if space inside the fence is inadequate, as close to the fence as possible. If maintaining four (4) horizontal feet of pavement is not possible, pedestrian, equestrian, and bicycle traffic shall be redirected to the service road on the west side of the spreading basins.

Attachment B

MITIGATION MONITORING AND REPORTING PROGRAM

Conditional Use Permit #5057
2696 Windsor Avenue

This Mitigation Monitoring and Reporting Program (MMRP) for Conditional Use Permit #5057, located at 2696 Windsor Avenue, has been prepared pursuant to the California Environmental Quality Act (CEQA – Public Resources Code, Section 21000 *et seq.*), the CEQA Guidelines (Cal. Code Regs., Title 14, Chapter, Sections 15074 and 15097) and the City of Pasadena CEQA Guidelines. A master copy of this MMRP shall be kept in the office of the Zoning Administrator and shall be available for viewing upon request. A copy also will be available at the office of the Condition/Mitigation Monitoring Coordinator.

The applicant, Pasadena Water and Power, filed a Conditional Use Permit application to allow for the construction, installation, and operation of an ion exchange (IX) and a liquid granular activated carbon (LGAC) treatment system to treat groundwater from four water supply wells - Arroyo Well, Well 52, Ventura Well, and Windsor Well. Groundwater extracted from these wells will be treated using IX to remove perchlorate, LGAC to remove volatile organic compounds (VOCs), and will be disinfected with chloramines consisting of gas chlorine and ammonium hydroxide prior to storing the drinking water in the Windsor Reservoir for distribution. The proposed treatment technology is approved by the Department of Public Health (DPH) and used at numerous locations in Southern California for drinking water application.

The MMRP includes mitigation measures in the Mitigation Monitoring and Reporting Matrix on the following pages. The matrix lists each mitigation measure or series of mitigation measures by environmental topic. For each mitigation measure, the frequency of monitoring and the responsible monitoring entity is identified. Mitigation measures may be shown in submittals and may be checked only once, or they may require monitoring periodically during and/or after construction. Once a mitigation measure is complete, the responsible monitoring entity shall date and initial the corresponding cell, and indicate how effective the mitigation measure was.

If any mitigation measures are not being implemented, the City may pursue corrective action. Penalties that may be applied, but are not limited to, the following: 1) a written notification and request for compliance; 2) withholding of permits; 3) administrative fines; 4) a stop-work order; 5) forfeiture of security bonds or other guarantees; and 6) revocation of permits or other entitlements.

Monitoring Program Costs

I HEREBY AGREE TO PAY THE CITY MONITORING FEES, AND IMPLEMENT THESE MITIGATION MEASURES, AT A MINIMUM, IN THE DESIGN CONSTRUCTION, AND MAINTENANCE OF THE PROJECT.

Gary Adams — 7/3/2008

APPLICANT — DATE

2696 Windsor Avenue Monk Hill Groundwater Treatment System
Mitigation Monitoring & Reporting Program Matrix

Project Address: 2696 Windsor Avenue
Case # CUP #5057 **Tidemark Case #** PLN2008-00153

Decision Maker/Effective Date: Hearing Officer
Planner: Lanny Woo

Impact	Mitigation Measures	Responsible Implementation Party/ Monitor & Reporter	Time Frame/ Monitoring Milestone	DOCUMENTATION OF COMPLIANCE		
				Responsible to Review Reports (Status/Actions/Notes)	Compliance Date	Staff Initials
Aesthetics						
Impact 3(c) Visual Character and Quality	Mitigation Measure 3-1: The views of the proposed Treatment System from Windsor Avenue and surrounding residences shall be screened to the satisfaction of the Director of Planning and Development. Said screening shall minimally be provided in the form of landscaping at the site. Minimally, site landscaping shall include planting a row of trees with wide canopies along a line just to the east of the fence located on the western border of the site, as well as a row of 5-foot high (at maturity) shrubs planted in front of the tree row to screen the view at lower heights. At the discretion of the Director of Planning and Development, a "Green Fence" to screen the view of the treatment plant shall also be utilized (an example of this screen is located at 888 Walnut Street, in Old Town Pasadena). Likewise, at the discretion of the Director of Planning and Development, a privacy cloth on the border fence shall also be utilized to screen views from the street.	Pasadena Water & Power/Planning and Development Department	During review of landscape plans, during landscape planting, and prior to issuance of a Final Certificate of Occupancy	Landscape Plans and site landscaping to be reviewed and approved by Design and Historic Preservation Staff		
Impact 3(c) Visual Character and Quality	Mitigation Measure 3-2: To the satisfaction of the Director of Planning and Development, and considering any public comment received during the project's CEQA public review period, all the exposed tanks, piping, equipment, and disinfection facility shall be a neutral (or earth-toned) color to help the Treatment System blend with the existing view. Prior to commencing painting, a paint color palette shall be submitted to the Director of Planning and Development for review and approval as part of the City's Design Review process. The Design Review process for the proposed project is a staff-level review that culminates in a decision made by the Director of Planning and Development. This decision may be appealed or called for review as provided in the City's	Pasadena Water & Power/Planning and Development Department	Prior to issuance of a Building Permit	Review and approval of color palate and design plans by the Design and Historic Preservation Staff		

2696 Windsor Avenue Monk Hill Groundwater Treatment System
Mitigation Monitoring & Reporting Program Matrix

Project Address: 2696 Windsor Avenue
Case # CUP #5057 Tidemark Case # PLN2008-00153

Decision Maker/Effective Date: Hearing Officer
Planner: Lanny Woo

Impact	Mitigation Measures	Responsible Implementation Party/ Monitor & Reporter	Time Frame/ Monitoring Milestone	DOCUMENTATION OF COMPLIANCE		
				Responsible to Review Reports (Status/Actions/Notes)	Compliance Date	Staff Initials
	Zoning Code.					
Biology						
Impact 6(a) Special Status Species	Mitigation Measure 6-1: The vegetated area to the south of the proposed pipeline alignment shall be avoided. Construction of the proposed pipeline extension shall be confined to the existing Windsor Avenue extension footprint and surrounding disturbed/maintained land.	Pasadena Water & Power/Planning and Development Department	Prior to issuance of Building permits and during construction	Review and approval of construction plans by the Planning Division and Building and Safety Division		
Impact 6(a) Special Status Species	Mitigation Measure 6-2: Clearing, grubbing, and/or removal of vegetation within or adjacent to the Arroyo Seco Master Plan Area shall be conducted outside the nesting bird season, which runs from April 15 to August 1: Any grubbing and/or removal of vegetation during the nesting bird season (April 15 to August 1) will require a nesting survey performed by a qualified biologist at least one (1) week prior to the activity and weekly thereafter. If discovered, all active nests shall be avoided and provided with a buffer zone of 300 feet (500 feet for all raptor nests) or a buffer zone that otherwise meets the minimum requirements of the California Department of Fish and Game. Once buffer zones are established, work shall not commence/resume within the buffer until a qualified biologist confirms that all fledglings have left the nest, which would likely not occur until the end of the nesting season.	Pasadena Water & Power/Planning and Development Department	One week prior to and during clearing, grubbing, and/or removal of vegetation	Verification by the Pasadena Water and Power that specified bird nesting surveys have been conducted		
Cultural Resources						
Impact 7(b) Archaeological Resources	Mitigation Measure 7-1: If archaeological resources are encountered during project construction, all construction activities in the vicinity of the find shall halt until an archeologist certified by the Society of Professional	Pasadena Water & Power/Planning and Development Department	During grading of the project site	Verification by Pasadena Water and Power that during grading of the site proper action is taken if		

2696 Windsor Avenue Monk Hill Groundwater Treatment System
Mitigation Monitoring & Reporting Program Matrix

Project Address: 2696 Windsor Avenue
Case # CUP #5057 Tidemark Case # PLN2008-00153

Decision Maker/Effective Date: Hearing Officer
Planner: Lanny Woo

Impact	Mitigation Measures	Responsible Implementation Party/ Monitor & Reporter	Time Frame/ Monitoring Milestone	DOCUMENTATION OF COMPLIANCE		
				Responsible to Review Reports (Status/Actions/Notes)	Compliance Date	Staff Initials
	Architects examines the site, identifies the archaeological significance of the find, and recommends a course of action. Construction in the vicinity of the find shall not resume until the site archaeologist states in writing that the proposed construction activities will not significantly damage archaeological resources.			archaeological resources are encountered		
Hazard and Hazardous Materials						
Impact 10(a), (b) Use and Storage of Hazardous Materials	Mitigation Measure 10-1: The process involving chlorine gas will be designed in accordance with the recommendations of the Chlorine Institute and the American Water Works Association (AWWA). Some details of the recommended design criteria that will be incorporated into PWP's chlorine process include the following: • The chlorine room will be provided with an adequate ventilation system consisting of an exhaust fan and intake louvers. Ventilation in chlorine storage rooms will be capable of 60 air changes per hour. The exhaust fan will be energized by an automatic door switch and a manual switch outside of the door that simultaneously open an air intake damper. Ventilation air will be introduced at the ceiling and exhausted at floor level because chlorine gas is heavier than air. • Chlorine rooms will have access to the outside. A fixed glass viewing window will be included in an inside wall to check for leaks before entering the room.	Pasadena Water & Power/Planning and Development Department, Fire Department	Prior to issuance of Building Permits	Review and approval of construction plans by the Building and Safety Division and Fire Department		

2696 Windsor Avenue Monk Hill Groundwater Treatment System
Mitigation Monitoring & Reporting Program Matrix

Project Address: 2696 Windsor Avenue
Case # CUP #5057 Tidemark Case # PLN2008-00153

Decision Maker/Effective Date: Hearing Officer
Planner: Lanny Woo

Impact	Mitigation Measures	Responsible Implementation Party/ Monitor & Reporter	Time Frame/ Monitoring Milestone	DOCUMENTATION OF COMPLIANCE		
				Responsible to Review Reports (Status/Actions/Notes)	Compliance Date	Staff Initials
Impact 10(a), (b) Use and Storage of Hazardous Materials	Mitigation Measure 10-2: The structure that houses the chlorine process will be equipped with state of the art leak detectors that can sense a chlorine leak as small as 1 part per million (ppm) in air. The leak detection system will be interlocked with the City's telemetry system that will provide an alarm via telephone or pager to an on duty water operator.	Pasadena Water & Power/Planning and Development Department, Fire Department	Prior to issuance of Building Permits	Review and approval of construction plans by the Building and Safety Division and Fire Department		
Impact 10(c) Handling Hazardous Materials in the Proximity of a School	Mitigation Measure 10-3: PWP will pre-coordinate emergency response activities with the local emergency responders (Pasadena Fire Department and the LA County Hazardous Materials Response Team).	Pasadena Water & Power/Fire Department	Prior to Final Certificate of Occupancy	Review and approval of pre-coordination emergency plan by the Fire Department and LA County Hazardous Materials Response Team		
Impact 10(c) Handling Hazardous Materials in the Proximity of a School	Mitigation Measure 10-4: The facility will include advanced warning systems that will alert PWP personnel of a chemical leak so that emergency responders, including the Pasadena Fire Department, can respond on scene in the event of an emergency. If a leak occurs that could affect Five Acres School, the responders will make public notifications including to the Five Acres School.	Pasadena Water & Power/Planning and Development Department, Fire Department	Prior to issuance of Building Permits	Review and approval of constructions plans by the Building and Safety Division and Fire Department		
Hydrology and Water Quality						
Impact 11 (d)(e) Drainage Capacity	Mitigation Measure 11-1: To the satisfaction of the City of Pasadena Department of Public Works, storm flows from the improved project site during the Urban Flood storm, shall not exceed the capacity of onsite drainage facilities. Based on preliminary drainage analyses conducted by Civiltech Engineering, Inc.'s (*Windsor Site Drainage Analysis* dated March 11, 2008) improvements to the existing drainage swale on the southern boundary	Pasadena Water & Power/Department of Public Works	During Plan Check	Drainage Study to be review and approve by the Department of Public Works.		

2696 Windsor Avenue Monk Hill Groundwater Treatment System
Mitigation Monitoring & Reporting Program Matrix

Project Address: 2696 Windsor Avenue
Case # CUP #5057 Tidemark Case # PLN2008-00153

Decision Maker/Effective Date: Hearing Officer
Planner: Lanny Woo

Impact	Mitigation Measures	Responsible Implementation Party/ Monitor & Reporter	Time Frame/ Monitoring Milestone	DOCUMENTATION OF COMPLIANCE		
				Responsible to Review Reports (Status/Actions/Notes)	Compliance Date	Staff Initials
	of the Windsor Reservoir Site and the corresponding curb outlet would be required to handle storm flows from a 50-year, 24-hour storm. Specifically, Civiltech Engineering, Inc.'s *Windsor Site Drainage Analysis* dated March 11, 2008, identified that built-scenario stormwater flows would be 16.57 cubic feet per second (cfs), which could be accommodated by converting the western 65 feet of the onsite swale to a trapezoidal ditch with a bottom width of 1.5 feet, a top width of 4.5 feet, and a total depth of 1.5 feet. The need for and specific type of drainage improvements shall be determined during final engineering and shall be subject to the review and approval of the City of Pasadena Department of Public Works.					
Noise						
Impact 14(a) Noise Generation/ Exposure	Mitigation Measure 14-1: The proposed project shall adhere to the noise restriction requirements of PMC Section 9.36.100. Noise generated by booster pumps shall be damped with acoustical treatments in a manner that prevents the ambient noise level at the nearest property line from increasing by more than 5 decibels above ambient levels. To ensure this requirement is met, all acoustical treatments shall be designed by an acoustical engineer, or equivalent professional meeting the satisfaction of the City of Pasadena Director of Planning and Community Development. In addition, ambient noise levels at the nearest property line shall be measured both pre- and post-construction to ensure that noise from booster pumps do not result in a greater than 5 decibel increase to the ambient noise level at the property line. If the booster pumps are determined to result in a greater than 5 decibel increase to the ambient noise level at the property line, additional noise reduction treatments shall	Pasadena Water & Power/Planning and Development Department	Prior to issuance of Building Permits and Final Certificate of Occupancy	Review and approval of construction plans and acoustical treatments by the Building and Safety Division		

2696 Windsor Avenue Monk Hill Groundwater Treatment System
Mitigation Monitoring & Reporting Program Matrix

Project Address: 2696 Windsor Avenue
Case # CUP #5057 Tidemark Case # PLN2008-00153

Decision Maker/Effective Date: Hearing Officer
Planner: Lanny Woo

Impact	Mitigation Measures	Responsible Implementation Party/ Monitor & Reporter	Time Frame/ Monitoring Milestone	DOCUMENTATION OF COMPLIANCE		
				Responsible to Review Reports (Status/Actions/Notes)	Compliance Date	Staff Initials
	be designed and installed to the satisfaction of the City of Pasadena Director of Planning and Community Development.					
Impact 14-2(a) Noise Generation/ Exposure	Mitigation Measure 14-2: Air compressors used onsite to replace spent media shall be equipped with properly operated mufflers that meet the manufacturer's specifications.	Pasadena Water & Power/Planning and Development Department	During operation	Periodic coordination with media vendor and responding to noise complains		
Impact 14(b) Vibrations	Mitigation Measure 14-3: For utilizing feed (booster) pumps potential vibrations shall be attenuated to the satisfaction of the City of Pasadena Director of Planning and Community Development with shock absorbers and proper design and alignment.	Pasadena Water & Power/Planning and Development Department	Prior to issuance of Building Permits	Review and approval of construction plans by Building and Safety Division		
Impact 18(a) Traffic Load and Capacity	Mitigation Measure 18-1: Delivery of construction equipment (i.e., mobilization) to the Windsor Reservoir site for the Monk Hill Treatment System project shall not occur while roofing materials are being delivered for the Windsor Reservoir Seismic Retrofit project.	Pasadena Water & Power/Planning and Development Department and/or Department of Transportation	Prior to issuance of Building Permits and during mobilization of project construction	Review and approval of construction staging and management plan by the Planning and Development Department and/or the Department of Transportation		
Impact 18(g) Alternative Transportation	Mitigation Measure 18-2: To maintain pedestrian, equestrian, and bicycle access along Karl Johnson Parkway (access road along the east side of the spreading basins) during construction on the Ventura Well and Well 52 sites, equipment shall be staged such that at least four (4) horizontal feet of pavement remains unobstructed. This can likely be accomplished by staging all equipment inside the site's fence or, if space inside the fence is inadequate, as close to the fence as possible. If maintaining four (4) horizontal feet of pavement is not	Pasadena Water & Power/Planning and Development Department and/or the Department of Transportation	During construction	Review and approval of construction staging and management plan and verification by the Planning and Development Department and/or the Department of Transportation during construction		

2696 Windsor Avenue Monk Hill Groundwater Treatment System
Mitigation Monitoring & Reporting Program Matrix

Project Address: 2696 Windsor Avenue
Case # CUP #5057 Tidemark Case # PLN2008-00153

Decision Maker/Effective Date: Hearing Officer
Planner: Lanny Woo

Impact	Mitigation Measures	Responsible Implementation Party/ Monitor & Reporter	Time Frame/ Monitoring Milestone	DOCUMENTATION OF COMPLIANCE		
				Responsible to Review Reports (Status/Actions/Notes)	Compliance Date	Staff Initials
	possible, pedestrian, equestrian, and bicycle traffic shall be redirected to the service road on the west side of the spreading basins.					

Attachment C

NOTICE OF DETERMINATION

TO: ☒ County of Los Angeles
Registrar-Recorder/County Clerk
Business Filing and Registration
12400 East Imperial Highway, Room #1101
Norwalk, CA 90650

☐ Office of Planning and Research
P.O. Box 3044
Sacramento, CA 95812-3044

FROM: City of Pasadena
Planning and Development Department
George Ellery Hale Building
175 North Garfield Avenue
Pasadena, CA 91101

SUBJECT: Filing Notice of Determination in compliance with §21108 or §21152 of the Public Resources Code

State Clearinghouse Number:

Project Title and File Number: **EIR/Environmental Case Number:**

Monk Hill Groundwater Treatment System – Conditional Use Permit #5057 (CUP #5057)

Project Contact Person:

Lanny Woo (626) 744-6776

Project Location (include county):

2696 Windsor Avenue, Pasadena, California Los Angeles County
(East side of Windsor Avenue between Mountain View Street (Los Angeles County) and Vista Laguna Terrace)

Project Description:

The applicant, Pasadena Water and Power, filed a Conditional Use Permit application (CUP #5057) to allow for the construction, installation, and operation of an ion exchange (IX) and a liquid granular activated carbon (LGAC) treatment system to treat contaminated groundwater from the four water supply wells - Arroyo Well, Well 52, Ventura Well, and Windsor Well. Groundwater extracted from these wells will be treated using IX to remove perchlorate, LGAC to remove volatile organic compounds (VOCs), and will be disinfected with chloramines consisting of gas chlorine and ammonium hydroxide prior to storing the drinking water in the Windsor Reservoir for distribution. The proposed treatment technology is approved by the Department of Public Health (DPH) and used at numerous locations in Southern California for drinking water application. The treated water, including the treatment system operations and maintenance will meet the requirements of DPH.

This is to advise that the City of Pasadena ☒ Lead Agency or ☐ Responsible Agency has approved the above described the project on July 10, 2008 and has made the following determinations regarding the above described project:

1. **The project [☐ will ☒ will not] have a significant effect on the environment.**
2. **☐ A Environmental Impact Report was prepared for this project pursuant to the provisions of CEQA.**
   ☒ A Mitigated Negative Declaration was prepared for this project pursuant to the provisions of CEQA.
3. **Mitigation Measures ☒ were ☐ were not made a condition of the approval of the project.**
4. **A mitigation reporting or monitoring plan ☒ was ☐ was not adopted for this project.**

5. **A statement of Overriding Considerations ☐ was ☒ was not adopted for this project.**
6. **Findings ☐ were ☒ were not made pursuant to the provisions of CEQA (Section 15091).**

This is to certify that the Final Supplemental EIR with comments and responses and record of project approval, is available to the General Public at: The City of Pasadena Permit Center, 175 N. Garfield Avenue, Pasadena, CA 91101.

	Environmental Administrator	
Signature	Title	Date

Date received for filing:
Date received for filing at OPR (if applicable):

Authority cited: Section 21083, Public Resources Code.
Reference: Sections 21000-21174, Public Resources Code.
Updated per the State CEQA Guidelines as Amended through September 7, 2004

Attachment D

ATTACHMENT D
SPECIFIC FINDINGS FOR CONDITIONAL USE PERMIT #5057

1. *The proposed use is allowed with a Conditional Use Permit within the applicable zoning district and complies with all applicable provisions of this Zoning* Code in that the proposed use of a water treatment plant is designated as a Major Utility under the zoning classification of the Zoning Code. The proposed use is consistent with the General Plan Land Use designation of Institutional. The improvements of the water treatment plant have been designed to meet the minimum setbacks and height requirements as set forth in the Zoning Code. The proposed IX, LGAC, and disinfection system will be located approximately 61 feet from the Windsor Avenue street frontage, approximately 122 feet to the northern property line, and 95 feet to the property line to the south. The height of the treatment system IX vessels (16 feet), LGAC vessels (23 feet), and disinfection system (12 to 18 feet) is below the maximum permitted height of the adjacent residential zones. Conditions of approval and the Mitigation Monitoring and Reporting Program will ensure that there are no significant impacts to the nearby residential neighborhoods.

2. *The location of the proposed use complies with the special purposes of this Zoning Code and the purposes of the applicable zoning district* in that current location contains a water supply well (Windsor Well) and a 4.75 million gallon reservoir (Windsor Reservoir). Due to elevated level of perchlorate, Well 52, Ventura Well, and Windsor Well were shut down in January 2002 and Arroyo Well was shut down in 1997. The location of the water treatment plant was proposed based on its proximity to the 4 wells and Windsor Reservoir, the accessibility of existing infrastructure, and the location for routine maintenance needs. The new IX, LGAC, and disinfection system have been designed to treat the water while minimizing impacts to the surrounding residential area.

3. *The proposed use is in conformance with the goals, policies, and objectives of the General Plan and the purpose and intent of any applicable specific plan* in that the construction and operation of water treatment plant (Major Utility Use) is consistent with the General Land Use Designation Objective 18 (Improved Environment), which calls to improve the quality of the environment for Pasadena and the region. The proposed project will be consistent with the Land Use Element Policy 18.4 (Water Quality), which requires the City to coordinate with local, regional, State, and federal agencies to continue to define appropriate standards to improve water quality. In addition, the proposed project is consistent with Land Use Element Policy 7.4 (Infrastructure Improvements), which encourages improvements related to upgrading the water supply system. The proposed project supports the City's commitment to sustainability and environmental stewardship. The project reinforces the United Nations Urban Environmental Accords Action 20 *Protect the ecological integrity of the City's primary drinking water sources.* In that the City receives 40% of its water supply from local groundwater supplies, treatment of this water source is critical to meet the drinking water requirements of DPH. The proposed project is necessary to restore use of these productions wells (Arroyo Well, Well 52, Ventura Well, and Windsor Well) to meet potable water demands for the City and its residents.

4. *The establishment, maintenance, or operation of the use would not, under the circumstances of the particular case, be detrimental to the health, safety, or general welfare of persons residing or working in the neighborhood of the proposed use* in that the project has been designed to minimize the impacts on adjacent residential neighborhoods. The project is intended to meet the water demands of the City while removing perchlorate and VOC in the water supply. The project has been design to observe setbacks that are

consistent with the immediate surrounding residential neighborhood. The water treatment system is setback approximately 122 feet from the residents to the north and 95 feet to the residents to the south. The operations and maintenance of the treatment plant will adhere to the requirements of State Department of Public Health (DPH). In addition, the project proposal will also be required to meet the standards of all City departments prior to the issuance of building permits. Mitigation measures have also been established that will be monitored through the Mitigation Monitoring Reporting Program (MMRP) to reduce any potential impacts to a less than significant level.

5. *The use, as described and conditionally approved, would not be detrimental or injurious to property and improvements in the neighborhood or to the general welfare of the City* in that the proposed use would provide treatment of a local water supply to supplement the City's other water resources. The proposed new landscaping would screen the treatment system to the neighbors to the west, north, and south of the project site. Furthermore, the project has been designed to meet the setbacks of the surrounding residential neighborhood. In addition, the proposed project will be monitored through Condition Monitoring of the Conditional Use Permit and Mitigation Monitoring Reporting Program to ensure compliance with the requirements of the City's Municipal Code and the conditions of approval as attached to this report. The project proposal will also be required to meet the requirements of all respective City departments prior to the issuance of building permits.

6. *The design, location, operating characteristics, and size of the proposed use would be compatible with the existing and future land uses in the vicinity in terms of aesthetic values, character, scale, and view protection* in that the treatment system will be located in a vacant portion of the same public space property as the existing Windsor Reservoir. The property has a zoning designation of Public and Semi-Public (PS) with a General Plan Land Use designation of Institutional. A conditional use permit is required for new utility infrastructure such as the case for the proposed new water treatment system. The project will be keeping with the developed character of the City of Pasadena, the surrounding unincorporated Los Angeles County, and the historic and current use of the parcel for water related facilities. The height of the proposed water treatment vessels are within the height restriction of the surrounding residential zoning districts in the area. Furthermore, the project includes additional perimeter landscaping to limit any potential visual impacts to the residential neighborhood.

Attachment E

ATTACHMENT E
CONDITIONS OF APPROVAL FOR CONDITIONAL USE PERMIT #5057

The applicant or successor in interest shall comply with the following conditions of approval:

1. The site plan and elevation plans submitted for building permit shall substantially conform to plans submitted and stamped "Received at Hearing, July 10, 2008" except as modified herein.

2. The applicant, or successor in interest, shall comply with the Mitigation Monitoring and Reporting Program as outline in Attachment B to this report.

3. The facility shall be accessible only by staff for the regular maintenance of the facility. At all other times the facility shall not be open to the public.

4. The height of the ion exchange (IX) and liquid granular activated carbon (LGAC) vessels shall not exceed a height of 26 feet.

5. If the existing chain-linked fence is removed on the perimeter of the project site and replace with a new wall/fence, the applicant shall have comply with Section 17.40.180 – Wall and Fences of the Zoning Code.

6. The project shall adhere to PMC 17.40.090 C, which pertains to odor.

7. The project shall adhere to the City regulations governing hours of construction, noise levels generated by construction and mechanical equipment, and the allowed level of ambient noise as specified in Chapter 9.36 of the Pasadena Municipal Code.

8. The project is subject to the requirements of California Accidental Release Prevention Program (CalARP). The applicant shall prepare and submit a Risk Management Plan (RMP) to the Pasadena Fire Department to evaluate and minimize the potential for any accidental releases.

9. A landscape plan shall be prepared and submitted to the satisfaction of the Zoning Administrator. Said landscape plan shall contain a row of trees and shrubs along the Windsor Avenue street frontage and shrubs along the northern and southern perimeter of the property intended to screen the water treatment plant from view of the adjacent residential properties.

10. Prior to any building permits, any trees on-site proposed for removal shall be reviewed by the Urban Forestry Advisory Committee (UFAC) for recommendation for removal.

11. The Zoning Administrator, at any time, can call for a review of the approved conditions at a duly noticed public hearing before the Hearing Officer. These conditions may be modified or new conditions added to reduce any impacts of the use. The Hearing Officer may revoke the Conditional Use Permit if sufficient cause is given.

12. The applicant, or successor in interest, shall meet the applicable code requirements of the Zoning Code and of all other City Departments at all times.

13. The proposed project, Activity Number **PLN2008-00153**, is subject to the City's Condition/Mitigation Monitoring Program. Condition Monitoring and Mitigation Monitoring is required for your project. Under the Monitoring Program, your project will be inspected by Code Compliance staff to determine compliance with the conditions of approval. The monitoring fees for inspection shall be paid on or after the effective date of this permit, but prior to the issuance of any permits. Contact the Code Compliance Staff at (626) 744-4633 to verity the fee. All the fees are to be paid to the cashier at the Permit Center located at 175 North Garfield Avenue. The cashier will ask for the activity number provided above. Failure to pay the required monitoring fees prior to initiating your approved land use entitlement may result in revocation proceedings of this entitlement.

Attachment F

MEMORANDUM - CITY OF PASADENA
DEPARTMENT OF PUBLIC WORKS

DATE: June 6, 2008

TO: Denver Miller, Zoning Administrator
Planning and Development Department

FROM: City Engineer
Department of Public Works

RE: Conditional Use Permit No. 5057
2696 Windsor Avenue

The Department of Public Works has reviewed the application for Conditional Use Permit No. 5057 for the construction, installation and operation of an ion exchange and liquid granular activated carbon treatment system from four water supply wells at 2696 Windsor Avenue. The approval of this Conditional Use Permit should be based upon satisfying all of the following conditions:

1. There is no curb, gutter, and sidewalk along the Windsor Avenue frontage of the subject property. The applicant shall construct street improvements consisting of concrete curb, gutter, 5' wide concrete sidewalk, asphalt roadway paving, street transition, and other necessary work along the Windsor Avenue frontage of the subject property, as per Public Works Exhibit A (attached). The street alignment shall be determined by the Department of Public Works. The new curb shall be constructed west of the line of existing trees at approximately 42' east of the west right of way line of Windsor Avenue. Windsor Avenue shall be cold milled to a depth of 0.1' and resurfaced from the new gutter to the centerline of the street.

2. The applicant shall construct a new drive approach a minimum of 12 feet in width and in accordance with Standard Drawing No. S-403. The construction of the new drive approach shall not damage the existing street trees which shall remain in place.

3. Based on sewer deficiencies identified in the City's Master Sewer Plan, the applicant shall pay a Sewer Facility Charge to the City for the project's fair share of the deficiencies. The Sewer Facility Charge is based on the Taxes, Fees and Charges Schedule and will be calculated and collected at the time of Building Permit Issuance.

4. The proposed development shall connect to the public sewer by a method approved by the Department of Public Works, or provide a closed-circuit television (CCTV) inspection of the existing 4" sewer lateral on site if it is going to be reused. The new sewer connection shall be six-inch diameter vitrified clay or cast iron pipe with a minimum slope of two percent.

If the applicant chooses to reuse existing 4" sewer lateral on site, the applicant shall correct any defects revealed by the CCTV inspection. Defects may include, excessive tuberculation, offset joints, excessive root intrusion, pipe joints that can allow water infiltration, cracks, and corrosion or deterioration of the pipe or joint material, damaged or cracked connection to the sewer main, or other defects as determined by the City Engineer. The method of correction of the defects shall be subject to the approval of the City Engineer, and may include partial or total replacement of the house sewer, or installation of a structural or non-structural pipe liner. The applicant shall be responsible for all costs required to obtain the CCTV inspection of the existing sewer connection, and if required, to correct the defects.

5. The existing open channel drain along the south side of the reservoir site is not adequate for the flows. It shall be improved as required based on an approved hydrology and hydraulics plan. The culvert in the public right of way shall be reconstructed as necessary to carry the calculated flows from the site.

6. If the proposed improvement drains to the driveway, the applicant shall construct a non-sump grate drain in the driveway at the back of the sidewalk. This drain shall discharge to the street at an approved angle in a cast iron curb drain or an approved curb outlet.

7. If drainage patterns are altered, the applicant shall provide an approved method of controlling storm water runoff. Approval shall be made by the Planning and Development Department and the Department of Public Works prior to issuance of a grading or building permit for this site.

8. The existing street lighting system along Windsor Avenue is substandard (or non-existent). In order to improve pedestrian and traffic safety, the applicant shall install a maximum of five (5) new street lights on or near the frontage of the property, including conduits, conductors, electrical service (if necessary), pull boxes, and miscellaneous appurtenant work. The type and hardware shall conform to current policies approved by the City Council, and the locations shall be as approved by the Department of Public Works.

9. If the existing street lighting system along the project frontages is in conflict with the proposed development/driveway, it is the responsibility of the applicant to relocate the affected street lights, including conduits, conductors, electrical services, pull boxes and miscellaneous appurtenant work in a manner that complies with the requirements and receives the approval of the Department of Public Works.

10. Civil engineering plans must be submitted to the Department of Public Works for approval of the public right-of-way improvements. Plans submitted to the Building Department do not satisfy this requirement. The applicant is responsible for design, preparation of plans and specifications, and construction of all required public improvements. Plans for the above improvements shall be prepared by an engineer, registered in the State of California. Upon submission of improvement plans to the Department of Public Works for checking, the applicant will be required to place a deposit with the department to cover the cost of plan checking and construction inspection of the improvements. The amount of deposit will be determined when the plans are submitted and will be based upon the estimated cost to the department for the work.

11. All landscaping in the public right of way shall be maintained by the applicant. No landscaping between the sidewalk and the curb shall exceed 2' in height at maturity.

12. Past experience has indicated that projects such as this tend to damage the abutting street improvements with the heavy equipment and truck traffic that is necessary during construction. Additionally, the City has had difficulty in requiring developers to maintain a clean and safe site during the construction phase of development. Accordingly, the applicant shall place a $20,000 deposit with the Department of Public Works prior to the issuance of a building or grading permit, or provide an account number to draw funds from in the case of damage. This deposit is subject to refund or additional billing, and is a guarantee that the applicant will keep the site clean and safe, and will make permanent repairs to the abutting street improvements that are damaged, including striping, slurry seal/ resurfacing, curb, gutter, and sidewalk, either directly or indirectly, by the construction on this site. This deposit may also be used for charges due to damage to existing street trees and for City personnel to review traffic control plans and maintain traffic control. A processing fee will be charged against the deposit.

13. Prior to the start of construction or the issuance of any permits, the applicant shall submit a Construction Staging and Traffic Management Plan to the Department of Public Works for review and approval. The template for the Construction Staging and Traffic Management Plan can be obtained from the Department of Public Works webpage at: http://www.cityofpasadena.net/publicworks/Engineering/default.asp. A deposit, based on the General Fee Schedule, is required for plan review. This plan shall show the impact of the various construction stages on the public right-of-way including all street occupations, lane closures, detours, staging areas, and routes of construction vehicles entering and exiting the construction site. An occupancy permit shall be obtained from the department for the occupation of any traffic lane, parking lane, parkway, or any other public right-of-way. All lane closures shall be done in accordance with the Manual of Uniform Traffic Control Devices (MUTCD) and California Supplement. If the public right-of-way occupation requires a diagram that is not a part of the MUTCD or California Supplement, a separate traffic control plan must be submitted as part of the Construction Staging and Traffic Management Plan to the department for review and approval.

In addition to the above conditions, the requirements of the following ordinances may apply to the proposed project:

- Sidewalk Ordinance - Chapter 12.04 of the Pasadena Municipal Code (PMC)
  In accordance with Section 12.04.035, entitled "Abandoned Driveways" of the PMC, the applicant shall close any unused drive approach with standard concrete curb, gutter and sidewalk. In addition, the applicant shall repair any existing or newly damaged sidewalk along the subject frontage prior to the issuance of a Certificate of Occupancy or any building permit for work in excess of $5,000 pertaining to occupancy or construction on the property in accordance with Section 12.04.031, entitled "Inspection required for Permit Clearance" of the PMC.

- Stormwater Management and Discharge Control Ordinance – Chapter 8.70 of the PMC
  This project is subject to the requirements of the City's Storm Water and Urban Runoff Control Regulation Ordinance which implements the requirements of the Regional Water Quality Control Board's Standard Urban Storm Water Mitigation Plan (SUSMP). Prior to the issuance of any demolition, grading or construction permits for this project, the developer shall submit a detailed plan indicating the method of SUSMP compliance. Information on the SUSMP requirements can be obtained from the Permit Center's webpage at http://www.cityofpasadena.net/permitcenter/plansubreq/susmp.asp.

- Construction and Demolition Waste Ordinance, Chapter 8.62 of the PMC
  The applicant shall submit the following plan and form which can be obtained from the Permit Center's webpage at http://www.cityofpasadena.net/permitcenter/plansubreq/cndord.asp and the Recycling Coordinator, (626) 744-7175, for approval prior to the request for a permit:

  a. C & D Recycling & Waste Assessment Plan – Submit plan prior to issuance of the permit. A list of Construction and Demolition Recyclers can be obtained from the Recycling Coordinator.

  b. Monthly reports must be submitted throughout the duration of the project.

  c. Summary Report with documentation must be submitted prior to final inspection.

  A security performance deposit of three percent of the total valuation of the project or $30,000, whichever is less, is due prior to permit issuance. This deposit is fully refundable upon compliance with Chapter 8.62 of the PMC. A non-refundable Administrative Review fee is also due prior to permit issuance and the amount is based upon the type of project.

- City Trees and Tree Protection Ordinance - Chapter 8.52 of the PMC
  The ordinance provides for the protection of specific types of trees on private property as well as all trees on public property. No street trees in the public right-of-way shall be removed without the approval of the Urban Forestry Advisory Committee.

If you have questions regarding the above conditions and requirements of the ordinances, please contact Sean Singletary, of this office, at (626) 744-4273.

DANIEL A. RIX
City Engineer

DAR:ss

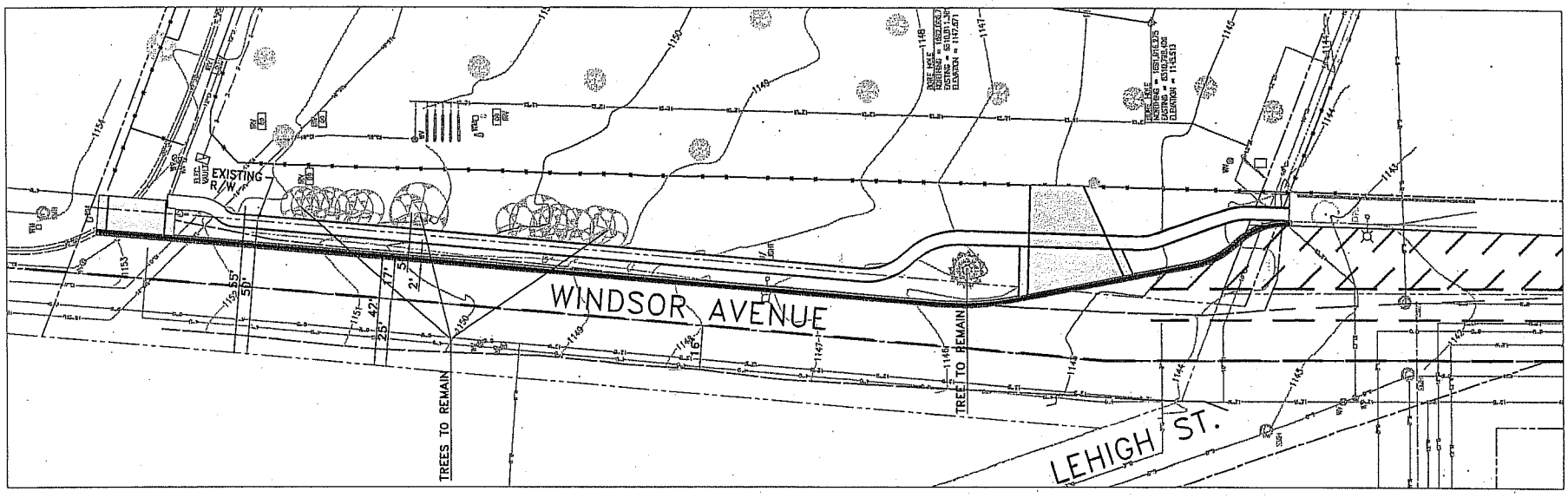

LEGEND

CONSTRUCT PCC SIDEWALK
CONSTRUCT PCC DRIVE APPROACH
CONSTRUCT PCC CURB AND GUTTER

SCALE: 1"=40'

WINDSOR AVENUE CONCEPT PLAN

EXHIBIT "A"

CAD21269.DWG
7/2/2008

Attachment G

MEMORANDUM - CITY OF PASADENA
DEPARTMENT OF TRANSPORTATION

DATE: May 28, 2008

TO: Denver Miller, Zoning Administrator
Planning and Development Department

FROM: Transportation Administrator
Department of Transportation

RE: Conditional Use Permit #5057
2696 Windsor Avenue

The Department of Transportation has reviewed the application for Conditional Use Permit #5750 for the construction of a groundwater treatment facility at project address 2696 Windsor Avenue. The project proposes to construct a treatment system to treat groundwater extracted from the Monk Hill wells located in northwest Pasadena. The approval of Conditional Use Permit #5750 should be based upon satisfying the following conditions:

1. Prior to the start of construction or the issuance of any permits, the applicant shall submit a Construction Staging & Traffic Management Plan to the Department of Public Works for review and approval. This plan shall show the impact of the various construction stages on the public right-of-way including identifying construction employee parking areas, documenting proposed street closures or detours, and indicating construction staging areas, at a minimum. Permitted hours for construction may be limited due to construction activities bordering the project site.

2. During construction, all construction materials, including temporary bins, must be stored on the site. Should the applicant need to use the public right-of-way for staging and/or storage during construction, a permit must be obtained from the Department of Public Works prior to the occupancy of the public right-of-way.

3. A construction route plan shall be prepared for and approved by the Department of Transportation prior to the issuance of the first permit for construction (demolition, grading, or building).

BAHMAN JANKA
Transportation Administrator

CLV

Attachment H

MEMORANDUM - CITY OF PASADENA
Fire Department

May 28, 2008

TO: Denver Miller
Principal Planner

FROM: James C. Weckerle
Hazardous Materials Specialist

Subject: CUP #: 5057Application for 2696 Windsor Avenue

The Hazardous Materials Section of the Pasadena Fire Department has reviewed the materials sent by your office regarding the subject CUP application. We offer the following comments:

1. The project is not developed to the point that many specific comments can be made. In general, compliance with existing laws and regulations *may* mitigate the hazards posed by this project. However, given the intimate proximity to residential properties and special uses, it is likely that significant mitigation efforts will be required for this project as system design progresses. The Fire Department's lack of objection to the CUP does not guarantee that Fire Code or other applicable regulations, or the fiscal impact thereof, may not block completion of the project at a later date once system design work commences.

2. The project has undergone a significant change since the Preapplication Conference in March 2006. The project has changed from using a hypochlorite solution to using gaseous chlorine, a change to a more hazardous and more difficult to manage material. A thorough evaluation of the issues to be considered during the Conditional Use Permit process would seem to warrant a description and discussion of the various options considered (i.e. liquid hypochlorite verses gaseous chlorine) and the rationale used to select the use of what would appear to be a more hazardous material over what would appear to be a lesser hazard.

4. Ammonia (including ammonium hydroxide) and chlorine are listed as Regulated Substances under the California Accidental Release Prevention Program (CalARP). Accordingly, it appears that this project will be subject to the requirements of CalARP for both ammonia and chlorine.

5. The project is currently located in the High Fire Hazard Severity Zone and likely will require additional mitigation due to the increased hazard.

More comments and additional restrictions will inevitably be placed on the project once the design of the treatment system commences. If you have any questions, please feel free to contact me by email or at extension 4288.

FIRE DEPARTMENT **2008 - CUP-5057**
06/24/08
Plan Reviewer: Douglas Myers **Phone No. (626) 744-6885**

The following conditions are based on the current information presented to PFD for review and are subject to change based on the final parameters established for this treatment facility at a later date.

Minimum Fire Flow/Fire Hydrants: All structures shall have the minimum fire flow (GPM) required by Appendix B and the quantity and spacing of fire hydrants as required by Appendix C of Title 24, Part 9, California Fire Code. All hydrants serving commercial and public occupancies shall be of the Jones Model # J-3775-8H. All existing hydrants providing fire flow for new or existing structures shall be replaced with Jones Model # J-3775-8H. Plans shall be submitted to the Pasadena Fire Department for review and approval prior to the review and approval of the building plans. Full size scaled drawings are to be submitted to PFD for us to establish the locations of all required fire hydrants.
NOTE: A current fire flow report (not older than 6-months), performed by the Pasadena Water Department, shall be provided to the Fire Department when applying for building permits to construct or add to any structures.

Fire Dept. Access/Knox Box: Fire Department Access shall be provided to within 150-feet of all exterior portions of any structure. All access roads exceeding 150-feet shall be provided with an approved Fire Department Hammerhead or Turnaround. Fire department access shall be constructed of an all weather surface to support a minimum of 35,000lbs with a minimum of 20-feet wide and unobstructed height of 13'-6", with No Parking On Either Side. No roadway way shall exceed 12% slope.
All access gates across roadways or entrances to facilities shall fail unlocked/open in the event of any loss of power. All access gates and main entrance doors shall have a Know Box or Knox Control Key Switch installed. Obtain Knox Box Applications from the Pasadena Fire Department Permit Desk.

Automatic Fire Sprinkler System or Standpipe: The hazmat storage and treatment structures are required to have automatic fire sprinklers installed throughout all areas of the structure. Shop drawings are to be submitted by the C-16 fire sprinkler contractor for review and approval prior to construction.

Fire Department Fire Sprinkler Connections: Shall be comprised of:

- FDC shall be located a 150-feet from the building and <u>within</u> 50-feet of a fire hydrant.
- (2) 2-1/2" CLAPPERED internal swivel outlet X 2-1/2" CLAPPERED internal swivel outlet X 4" FDC
- 4" CLAPPERED internal swivel outlet X 4" FDC
- Shall be clearly labeled to indicate FDC for Fire Sprinklers and Standpipes.
- A clear dimension of 3-feet shall be maintained around the perimeter of each fire department appliance.
- All fire appliances except for fire hydrants shall be cleaned, primed, and painted fire engine red enamel or krylon.

Emergency Alarm System: All structures containing toxic gases shall have an Emergency Alarm Systems engineered and installed in compliance with the CFC and performance in compliance with NFPA 72 as required for fire alarm systems. Shop drawings shall be

engineered by the C-10 contractor installing the systems and submitted to PFD for review and approval prior to construction.

Gas Detection Systems: All gas detection systems shall be engineered and submitted by the C-10 contractor installing the system to PFD for review and approval prior to construction.
Chemical Neutralization Systems: All chemicals exceeding the exempt amounts per the CFC shall have neutralization systems as required by the CFC. All neutralization systems requiring a primary power source are required to have a secondary power source in compliance with Article 700 of the CEC. The duration of secondary power is a minimum of 90-minutes or the duration modeled on a gas release rate, whichever is greater.

Emergency Illumination: Both interior and exterior areas of the structures containing hazardous materials storage and/or processes shall have emergency illumination with secondary power for a minimum of 90 minutes or the duration of a modeled chemical release, whichever is greater.

Secondary Containment: Shall be calculated based on the single largest container or release plus 20-minutes of fire sprinkler flow or 24 hours rainfall based on a 25 year storm if exterior storage.

Additional Requirements: All additional requirements as mandated in the Title 19/24, NFPA, and Nationally Recognized Standards of practice shall be complied with based on the final design properties established for this treatment facility.

Attachment I

PASADENA WATER DIVISION

Conditional Use Permit Number:	5057
Date Received:	June 5, 2008
Location:	2696 Windsor Avenue
District Sheet:	210A
Review Completed:	June 12, 2008

Description: Conditional Use Permit to allow for the construction, installation, and operation of a ion exchange (IX) and a liquid granular activated carbon (LGAC) treatment system to treat groundwater from four water supply wells; Arroyo Well, Well 52, Ventura and Windsor Well of the Monk Hill Wells.

REMARKS:

Pasadena Water and Power (PWP), Water Division, can serve potable water to this project in accordance with the Water Rate Ordinance Number 4583.

The following eleven water mains are within the project limits:

1. A 30-inch Hume water main 18 feet south of the north property line of Windsor Reservoir installed under work order 2727.
2. A 12-inch ductile iron water main south of the north property line of Windsor Reservoir installed under work order 6493.
3. A 16-inch steel water main south of the north property line of Windsor Reservoir installed under work order 6237.
4. A 16-inch cast iron water main north-west of Windsor Reservoir installed under work order 2788.
5. A 24-inch cast iron water main south-west of Windsor Reservoir installed under work order 379.
6. A 4-inch cast iron water main south-west of Windsor Reservoir installed under work order 36688.
7. A 10-inch cast iron water main south of Windsor Reservoir installed under work order 2010.
8. A 8-inch cast iron water main south of Windsor Reservoir installed under work order 4077.
9. A 12-inch ductile iron water main 27 feet east of the east property line of Windsor Avenue installed under work order 6451.
10. A 16-inch water main east of the east property line of Windsor Avenue installed under work order 6488.
11. A 8-inch cast iron water main 50' west of the east property line of Windsor Avenue installed under work order 1912.

Conditions:

1. Drawing EX-120 reflects installation of a 10-inch water meter and reduced pressure principal back flow prevention assembly (RPP).
   a. The Water Division's Cross Connection Control Specialist (CCCS) shall approve the type of water meter based on flow rates.
   b. The Water Division's CCCS shall approve the RPP manufacturer, model, orientation and location.
   c. The RPP shall be installed 12-inches above grade, within 10-feet of the water meter.
   d. Install a line size strainer at each RPP installed.
   e. The RPP shall be tested and certified upon installation.

2. Drawing EX-120 reflects installation of a chlorine and Ammonia storage area. Provide a separate domestic water meter and RPP as makeup water to the emergency eye wash station, refer to 1-a, 1-b, 1-c, 1-d and 1-e above for additional conditions.

3. The approximate water pressure range at the project site is 110-psi (Gould Zone) and 55-psi (Millard Reduced). All irrigation water proposed for this project shall be supplied from the Gould pressure zone. Irrigation plans shall be reviewed and approved by the CCCS.

4. The CCCS shall review and approve plans for the proposed improvements and modifications to the existing sandbox.

5. The applicant is proposing improvements to the electrical system at Arroyo Well. The improvements cannot impact the Water Division's booster pump station located in the Arroyo Well building. The booster station is critical for fire suppression in the area. No alternative water source is available. A constant electrical service shall be maintained to the booster station during any and all electrical improvements.

6. The Water Division Director shall approve the design for the proposed effluent line to Windsor Reservoir and all proposed pipe, fittings, valves and meters etc.

Richard Thompson
Utility Service Supervisor
Water Services Division

WATER AND POWER DEPARTMENT
WATER DIVISION
REVIEW FOR
CUP#5057
2696 Windsor Avenue
June 4,2008

0 70 140 280 Feet

LOCATION MAP

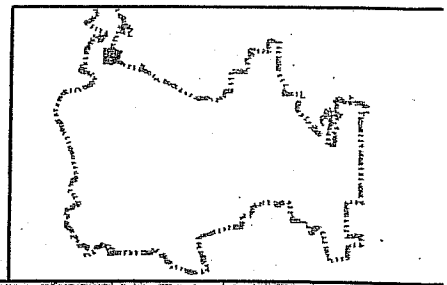

DISTRICT MAP NO. 210a

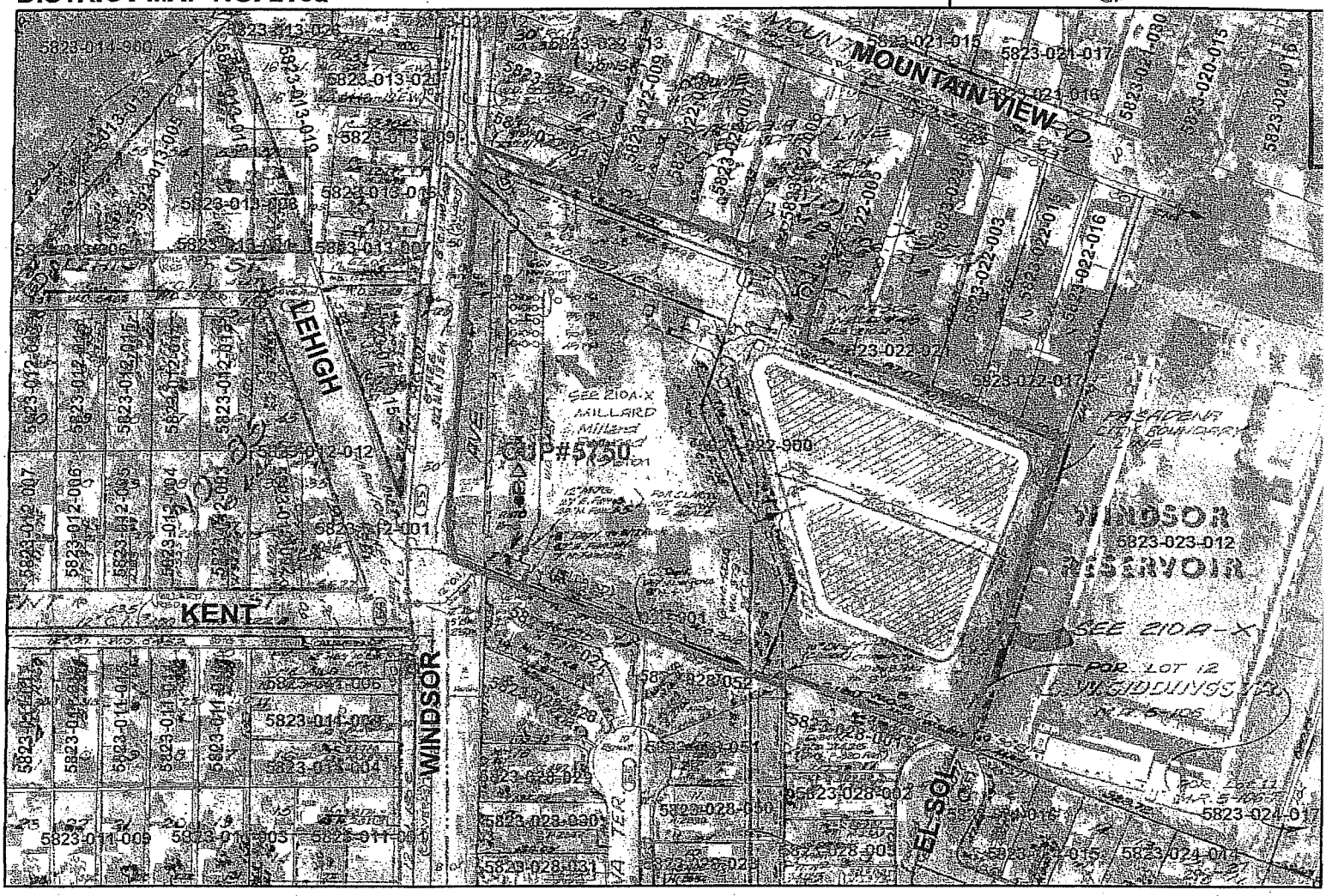

MORATORIUM MAP

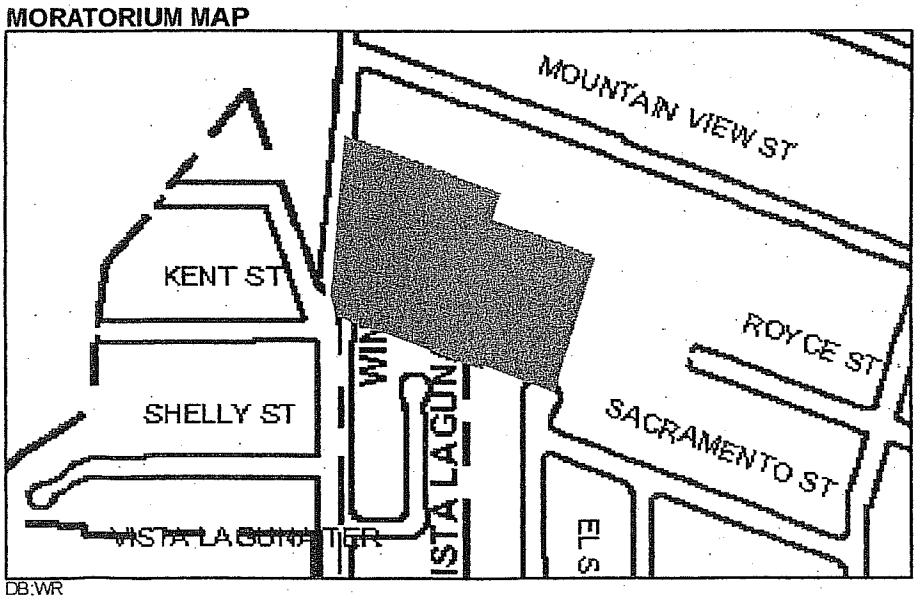

Legend

COMPLETED IMPROVEMENTS

- 2001, RECONST/RESURFACE (PAVED 11-01)
- 2002, RECONST/RESURFACE (PAVED 10-02)
- 2003, RECONST/RESURFACE (PAVED 07-03)
- 2004, RECONST/RESURFACE (PAVED 11-04)
- 2005, RECONST/RESURFACE (PAVED 11-05)
- 2004, SLURRY (PAVED 11-04)
- 2005, SLURRY (PAVED 12-05)
- 1997, CONCRETE,10 YEAR MORATORIUM

FUTURE IMPROVEMENTS

- 2006, SLURRY
- 2006, RECONST/RESURFACE
- 2007, SLURRY
- 2007, RECONST/RESURFACE

NOTE: CONCRETE ALLEY CONSTRUCTION DATES ARE LISTED ON MAP.

DB:WR

Attachment J

Conditional Use Permit # 5057
2696 Windsor Avenue

June 5, 2008

I. The City of Pasadena Water and Power Department (Department) shall continue to provide electrical service to the proposed development at 2696 Windsor Avenue (Customer) on the following basis:

1. If required, Customer shall upgrade existing electric transformer enclosure as a result of increased Customer electric load. The number and size of the upgraded transformer enclosure varies according to the size of the electrical service.
2. If required, Customer shall upgrade existing electric underground infrastructure as a result of increased Customer electric load.
3. Any required transformer room / vault located within a building structure shall be rated for 4-hour fire separation and meet all local Fire Department requirements related to room ventilation and alarming.
4. Customer shall be responsible for the maintenance of the transformer room / vault, provide protection for the equipment in the transformer room / vault, and allow access to the transformer room / vault at all times to Department personnel and vehicles in accordance with the Department Electric Service Requirements Regulation 21.
5. If required, Department shall install concrete-encased primary service laterals to the property line. The number and location of the service laterals varies according to the size of the electrical service.
6. If required, Customer shall pick-up new primary service laterals at the property line and install concrete-encased conduits to transformer room / vault within the development area. The number and location of the conduits varies according to the size of the electrical service.
7. If required, Customer shall install upgraded transformer enclosure, service equipment, and secondary service conduits within the development area.
8. Department shall install electrical service transformers, cables, and electric meters.
9. All Department installation costs shall be paid by the Customer.
10. Customer must identify and notify the Department of any conflict with existing overhead lines / poles and maintain existing ingress / egress access for overhead lines / poles. Proper clearances between the proposed structure and overhead lines / poles must be maintained.
11. Customer must identify and notify the Department if there is any underground electrical conduit within the proposed development area in conflict with the construction.
12. Customer shall provide Department all easements necessary for Department to access electrical service equipment.
13. Customer installed distributed generation resources that will be interconnected to the Pasadena Electric Distribution System shall be installed in accordance with the Department Distributed Generation Interconnection Requirements Regulation 23. In addition, all Customer installed solar photovoltaic (PV) resources shall also meet the requirements of the Pasadena Solar Initiative and Rebate Program.

II. In order to determine the specific requirements of the electrical service for this project, the following items will need to be included in the Submittal Drawing Set (2 sets of electrical plans required): service size & voltage, main service disconnect, scaled site plan, elevation plan, proposed transformer room / vault location, electrical meter / panel location, single-line diagram, load calculation, and proposed construction schedule.

III. All comments are preliminary and are based on the limited description provided. Please arrange a meeting with Utility Service Planning personnel for further information and detailed requirements at (626) 744-4495.

David Bratzler, P.E.
Pasadena Water and Power
Power Delivery Engineering & Construction Management
dbratzler@cityofpasadena.net
Ph. (626) 744-7460