APPENDIX E Part 3

OU-1 O&M Maintenance Manual

ATTACHMENT 7:
TRIMITE FILTER (TM-350A) O&M MANUAL

Trimite TM-350A
Project S.O. # 310036

NASA JPL
Pasadena, CA

USFilter

Submittal
Package

USFilter/Memcor
41 Main Street
Sturbridge, MA 01566
Project Manager: Branden Gonzales
Project Engineer: Stephen Turley

VEOLIA Environment

SUBMITTAL PACKAGE FOR:
NASA JPL
PASADENA, CA
TRIMITE - TM-350A

SUBMITTAL PACKAGE
WATER TREATMENT PLANT

PROJECT #310036
EQUIPMENT #310036

4/13/04

BY
USFilter
441 MAIN STREET
P.O. BOX 36
STURBRIDGE, MA 01566
508/347-7344
508/347-7049

TABLE OF CONTENTS

SECTION	DESCRIPTION
1	General
	1.1 Technical Data Sheet and Specifications
	1.2 Equipment and Miscellaneous Parts List (Project)
	1.3 Flow Diagram – P&ID
	1.4 Outlet Panel Assembly
2	Field Assembly & Media Design
3	Units #1 - #2
	3.1 Shop Assembly
	3.2 Filter Effluent Turbidimeter Assemblies
	3.3 Filter Headloss Switch Assembly
	3.4 Clarifier Pressure Switch Assembly
	3.5 Blower Pressure Switch Assembly
4	Chemical Feed Assembly – By Others
5	Electrical and Controls Detail
	5.1 Power Panel Assembly
	5.2 Control Panel Assembly
	5.3 One Line (Interconnection) Diagram
	5.4 Electrical Schematic
	5.5 Instrument Loop Diagram
6	Installation Manual
7	Material Safety Data Sheets
8	Parts Information (Catalog Cut Sheets)

GENERAL

1 Tri-Mite Brochure
Technical Data Sheet

2 Equipment List
BOM #3100360000

3 Misc. Parts List
BOM #3100369000

4 Flow Diagram – P&ID
Drawing #3100360101

5 Outlet Panel Assembly
Drawing #3100368034
BOM #3100368034

USFilter

TRIMITE™

TECHNICAL DATA SHEET

TECHNICAL DATA	MODEL	TM-350A
Influent Flow Rate	GPM (GPD)	350 (504,000)
Shipping Dimensions	Length	22 ft. 6 in.
	Width	10 ft. 10 in.
	Height	9 ft. 4 in.
Tank Dimensions[8]	Length	20 ft. 1 in.
	Width	6 ft. 11 in.
	Height	7 ft. 6 in.
Weights[11]	Shipping	16,000 lbs.
	Operating	74,000 lbs.
Base Pad Design		675 lbs/sq.ft.
Backwash Holding Tank	Volume	18,200 gal.
Overhead Clearance	Minimum	2 ft. 6 in.
Tank Connections	Influent	6 in.
	Effluent	6 in.
	Backwash	6 in.
	Waste/Overflow	10 in.
	Filter-to-Waste	6 in.
	Air Wash (clarifier)	3 in.
	Air Wash (filter)	3 in.
Automatic Valve Sizes	Influent	4 in
	Effluent	4 in.
	Backwash	6 in.
	Filter-to-Waste	4 in.
	Waste	10 in.
	Air Wash Control (clarifier)	3 in.
	Air Wash Control (filter)	3 in.
Manual Valve Sizes	Influent Rate Setting	4 in.
	Backwash Rate Control	6 in.
Adsorption Clarifier™	Total Area	35.0 sq.ft.
	Upflow Rate	10 gpm/sq.ft.
Mixed Media Filter	Total Area	70.0 sq.ft.
	Rate	5 gpm/sq.ft.
	Standard Backwash Rate	15 gpm/sq.ft.
Total Volume per Wash Cycle	Adsorption Clarifier[2]	3,500 gal.
	Mixed Media[1]	6,825 gal.
Pumps	Effluent	350 gpm, 7.5 hp
	Backwash	1,050 gpm, 25 hp
Blower		163 scfm, 7.5 hp 3.2 psig
Electrical	Control panel w/ Transformer	480V, 60 Hz 30, 4 wire, 80A

NOTES:

1. Mixed Media backwash rate shown above is 15 gpm/ft^2 as required at 60° F. Required rate varies linearly with temperature from 10 gpm/ft^2 at 32 ° F to 18 gpm/ft^2 at 75° F. Wash volumes indicated above are based on a 6-minute backwash duration.
2. The Adsorption Clarifier™ is normally washed (using influent water) one or more times between Mixed Media backwashes, as well as in sequence with a Mixed Media backwash. The waste holding system should be sized to handle a total of two complete wash volumes from each compartment. The Adsorption Clarifier wash volume indicated above is based on an 10-minute total wash flush.
3. The influent pumping system should provide a range of 25-35 ft. at the plant inlet.
4. Available materials of tank construction include painted carbon steel, aluminum or 304SS. Process piping is PVC.
5. The second unit in a two-tank configuration shares the controls, backwash pump, air blower, and chemical feed systems from the first unit.
6. TM-350A standard start-up and operator training requirements are 4 days in one trip to the jobsite. Add one additional day for two-unit configurations.
7. Effluent/backwash pumps are approximately 30-40 feet TDH. Our effluent requirements are approximately 10 feet TDH. Our backwash requirements are approximately 20 feet TDH.
8. Dimensions do not include waste box.
9. All controls are automatic.
10. All valves are electric.
11. Media is shipped separately on the TM-350A.

USFilter WATER TREATMENT PRODUCTS
Technology and Application Summary Sheet

Trimite

Product/Technology Name:	Trimite Water Treatment System Single Tank System
Process Area:	Drinking water Clarification and filtration
Product Description:	The Trimite System is factory assembled and combines a variety of chemical treatment solutions. The patented Adsorption Clarifier and Mixed Media Filter deliver excellent predictable finished water quality. The system includes our low profile direct retention air/water backwash underdrain system. The underdrain system allows for additional filter media or a layer of activated carbon without an increase in tank height. Each system includes the Basic Aquaritrol PLC Program
Application Range:	Standard tank designs provide systems in increments between 50-350 GPM. Multi-tank modules can be supplied to accommodate flows as high as 700 GPM.
Advantages:	• Microfloc has a strong name in the water industry. • Treat water with up to 100 NTU or up to 100 color units. • Treat water with combined total NTU and color of 150. • Clarifier runs 6-12 hours. • Filter runs up to 30 hours. • Capable of 2 log removal of Crypto and Giardia size particles. • Up to 3 log removals demonstrated by pilot studies. • Proprietary design with over 500 installations. • The clarifier reduces turbidity 75-95% causing settling to be insignificant. • The Trimite system reduces coagulant usage 5-10% and filter aid usage as much as 60%. • Trimite installation costs less than that of conventional systems and actual operational savings range from 10-60%. • Foot print is up to 60% smaller than that of conventional plants. • Effluent and backwash pumps are supplied on the factory assembled unit.
Cost Estimates/Range:	Application Specific
Operating Cost:	Application Specific
Total Cost:	Consult USFilter/ CPC
Additional Information:	• Adsorption Clarifiers should not be used for lime softening processes • Process staff can provide laboratory, pilot study or process design assistance.

Equipment Specifications

Trimite™ Water Treatment Systems

Section 1 - GENERAL

1.01 WORK INCLUDED:

A. This section of the specification covers the furnishing and installation of Trimite Adsorption Clarification/Filtration treatment units and appurtenances as shown on the drawings and as specified herein.

B. The following items are a part of this section and shall be furnished by one manufacturer to ensure a properly designed and integrated water treatment system.

1. Factory built steel modular tanks, each designed using an up flow Adsorption Clarifier followed by a down flow gravity filter with Mixed Media, utilizing a direct retention underdrain system.

2. The treatment system shall include chemical treatment, Adsorption Clarification section, Mixed Media Filtration section, direct retention media support, automatic process valves, controllers, air blowers, and the system control panel.

3. An air scouring system including air blowers and automatic valves for the operation of this system to flush the Adsorption Clarifier and to aid in the Filter backwash.

4. The filtration section shall consist of Mixed Media with a direct retention underdrain system. The underdrain system shall provide simultaneous air/water backwashing. The highrate of the filter shall be 15-18 gpm/ft^2.

1.02 QUALITY ASSURANCE:

A. The treatment system shall be furnished by a single manufacturer who shall comply with the following:

1. The single manufacturer supplying equipment to this specification shall furnish proof of a minimum of 100 installations and 10 years of manufacturing treatment systems as specified.

2. Due to a potential for higher than normal turbidities, the system manufacturer must furnish proof of a minimum of 3 operating plants that have similar systems treating over 40 NTU raw water for sustained periods of time, and spike loading in excess of 200 NTU.

3. Due to a potential taste and odor problem, or to provide the capability for carbon adsorption, the system manufacturer shall furnish proof of the system's ability to perform properly while feeding Powdered Activated Carbon at a minimum dosage level of 25 mg/l. This must be demonstrated by a minimum of 3 pilot studies and/or operating plants showing positive results.

4. The system must be capable of operating at a range of 50% to 150% of the standard design flow.

5. In addition to normal start-up service, the systems detailed above shall be fully operational including the demonstration of a fully automated control sequence for the backwash and flush of the system, based on reaching design terminal headloss in both the filter and clarifier.

1.03 SUBSTITUTIONS:

A. Manufacturers other than that which is specified and/or not meeting EVERY provision of the specification shall be required to submit a complete and detailed PRE-QUALIFICATION PACKAGE to the engineer at least fifteen (15) days prior to the bid. Any PRE-QUALIFICATION PACKAGE must contain as a minimum:

1 Detailed Layout Drawings.
2. Detailed component specifications and catalog cut sheets.
3. Process P&ID Drawing.
4. Detailed list of variations required from original design, referencing appropriate sections of the specifications and locations on the drawings.
5. History of the process offered, including pilot data and experience.
6. Installation list including actual scale-up data from pilot testing to full scale plant operation, also including plant contact names and telephone numbers.
7. All other data as required in Section 1.02 - Quality Assurance.
8. A detailed System Performance Guaranteed with appropriate remedies for Non-performance.

B. Manufacturers qualifying will be recognized by addendum a minimum of five (5) days prior to the bid. Contractors shall include all costs associated with any redesign required with their bid.

C. Manufacturers not meeting this specification in EVERY WAY or are not PRE-QUALIFIED and approved by the engineer as outlined above will not be considered for use on this project.

Section 2 - PRODUCTS

2.01 GENERAL

A. All component parts and equipment utilized in the pre-engineered water treatment system, including the systems described in Section 1.01 shall be furnished as a complete integrated system by one manufacturer; this specification is for a Trimite Water Treatment Plant as manufactured by USFilter/CPC.

** Furnish and install 1 Adsorption Clarifier/Filter tanks capable of 350 GPM. The following Adsorption Clarifier/Filter pre-engineered treatment system shall be provided:

Model Number	Nominal Capacity (GPM)	Total Surface Area (sq.ft.) Clarifier	Filter
TM-350A	350	35.0	70.0

** B. Adsorption Clarifier Details

** 1. The contractor shall install 1 Adsorption Clarifier unit of the dimensions shown on the drawings providing the total surface area shown in the table above. Clarification shall be accomplished using granular adsorption media specifically manufactured for use in water treatment. The medium shall be designed to optimize the removal of coagulated particles with a minimum of headloss. The clean bed headloss through the Adsorption Clarifier shall be less than 18 inches at 10 GPM per square foot. The Adsorption Clarifier shall be able to build solids to a headloss of six (6) feet without disruption or movement of the clarifier media.

2. The adsorption media retention screen shall be a corrosion resistant assembly that allows free passage of water but contains the adsorption media particles. The retainer assembly shall be easily accessible and removable from the top of the tank.

3. The adsorption media shall be buoyant with specific gravity of less than 1.0. A media retention screen shall be provided to allow for upflow, restrained operation eliminating any chance of fluidizing the bed during operation. However, to allow for proper cleaning, the media shall be easily fluidized by the addition of small amounts of diffused air. Clarifier media that is not restrained and/or media that will not easily fluidize by the addition of air shall not be considered acceptable.

4. Influent flow to the Adsorption Clarifier shall be regulated by an operator adjustable manual rate set valve. When more than one tank is supplied, influent isolation valves will be provided.

5. The Adsorption Clarifiers shall be equipped with an air scour system consisting of a fixed distribution grid with non-clog air diffusers consisting of stainless steel screens molded into a plastic body. The air distribution laterals shall be constructed from a corrosion resistant material. The clarifier compartment shall be provided with a screened outlet to allow for draining of water without loss of media.

6. The adsorption clarifier media shall be able to be floated over to the filter side of the tank for clarifier draining, air and water piping inspection and/or service. The media shall be able to be floated back to the clarifier section of the tank without any media loss or damage within an eight (8) hour shift per tank.

7. Non-buoyant alternates using an up flow unrestrained media shall, as an additional requirement of section 1.03 (substitutions), demonstrate a minimum of 20% bed expansion during cleaning of all layers of media. In addition, non-buoyant designs shall incorporate surface agitation as part of the cleaning process. In lieu of being able to float media out of the clarifier for inspection, all internal construction below the media shall be manufactured from stainless steel and a man way for access to clarifier internals shall also be provided for non-buoyant alternatives.

** C. Filter Details

1. The total filter area shall be as shown in the table in Section 2.01-A of this specification. The filter shall be designed for gravity flow with the flow rate regulated by a float valve or a liquid level controller with a modulating effluent butterfly valve. The filter underdrain system shall be a direct retention media support type as outlined in paragraph C.4 of this specification section.

2. The filter media shall be a 30 inch deep Mixed Media separation bed composed of three materials, each of different size and specific gravity, providing uniform void distribution from coarse to fine in the direction of flow. The Mixed Media shall consist of 18" of anthracite coal, 9" of silica sand and 3" of high density sand. The top of the bed shall consist of material of approximately 1.2 mm particle size, and the bottom of approximately 0.2 mm particle size.

3. The filter media shall be supplied by the manufacturer and shall be shipped in bags for ease of installation. The manufacturer will advise

exact volume of each layer of Mixed Media to be installed by the contractor.

** 4. TM-350A

For the TM-350A the manufacturer shall furnish and install the Triton filter underdrain system as manufactured by USFilter/CPC in Sturbridge, Massachusetts. The Triton laterals shall utilize assemblies of Johnson Vee-Wire screen and perforated channel rods. The components shall be fabricated from PVC. The main plenum cover and plenum/underdrain connections shall be made from 304 stainless steel.

The underdrains shall accommodate air and water backwash through the same laterals and be specifically designed to provide uniform distribution of air, water and simultaneous air/water during backwashing through the integral channel rod orifices. Underdrains that have a perforated pipe insert or support gravels are not considered acceptable.

The media retention surface area shall be in excess of 100% of the filter floor surface and shall have a minimum open area of 10% of the floor area. The media retention surface shall be on the top half of the laterals only. The media retention surface shall be no thicker than 0.125 inches to minimize plugging and headloss.

The underdrain laterals shall be capable of withstanding an internal pressure of 6 psig. Each lateral shall have a width to height ratio of at least 2.5 to 1. The maximum lateral height shall not exceed 4.5 inches.

The laterals shall be installed without any special tools, adhesives, or sealing grout between laterals. The Underdrain system shall operate properly with complete air/water distribution when leveled to within +/- 0.25 inches.

2.02. Factory Built Package Clarifier/Filter Treatment Plant Construction

A. Tank Fabrication

1. The major components shall be of the size and configuration shown on the drawings and fabricated of 0.3125 inch thick minimum steel plate, except the bottom which should be a minimum of 0.250 inch thick, suitably braced and supported. In no case shall a single steel plate wall separate filtered and unfiltered water. A double bulkhead shall be provided with free drainage from the space between, to indicate leaks.

2. Influent, effluent and waste connections shall be flange.

3. The clarification and filtration processes shall be contained in single, rectangular steel tanks. Both production water and wastewater shall be conveyed in a single steel trough which spans the entire width of the tank. The trough shall have an integral tank overflow section that will allow the full plant design flow to run to waste without overflowing the tank.

4. Oil, grease, dirt, rust, mill scale, and foreign matter shall be removed from the interior tankage surface by a method defined by the Steel Structures Painting Council SSPC Spec (latest revision). Tankage interior and exterior shall receive at the factory, two coats of high build epoxy finish protective coating, to a thickness of 8 to 12 mils, suitable for potable water service. Tank bottom shall be bare, for the field placement onto a mastic base pad coating, or impregnated felt to be provided and installed by the contractor.

B. Plant Process Valves

1. The treatment plant manufacturer shall provide all process control valves in sizes shown on the drawings. Automatic valves for Adsorption Clarifier air scour, Filter effluent, Filter to waste, backwash and air assisted backwash shall be provided for each tank.

2. Automatic valves with motor actuator shall be provided for process valves. Valves 2" and smaller shall be ball type with bronze body, brass ball and Teflon * seats. Valves 2-1/2" and larger shall be wafer butterfly valves with aluminum bronze disc, Buna N seat and stem seals, and iron body.

3. Motor actuators shall have 120V, 60 Hz supply. NEMA 4 enclosure.

4. A manual wafer-type butterfly valve, complete with operating lever, shall be provided for backwash rate setting.

5. Automatic valves shall be provided for effluent, Adsorption Clarifier ™ scour, filer scour, backwash inlet, and waste.

6. Plant influent flow shall be adjustable by a manual rate set valve. Plant effluent flow shall be maintained by a level-responsive control valve.

7. Automatic influent valves shall be provided on dual unit installations.

8. All other valves shall be provided by the contractor.

C. Plant Blowers

** Low pressure air for scouring the Adsorption Clarifier ™ and Mixed Media filtration materials shall be supplied by a two-stage regenerative type blower with a cast aluminum alloy impeller and blower housing. The unit shall be dynamically balanced, have a close couple TEFC motor and include intake and exhaust silencers. Bearings shall be double sealed and permanently lubricated.

D. Pumps

The treatment plant manufacturer shall provide factory-installed effluent and backwash pumps. Pumps shall be centrifugal, end suction, close coupled with TEFC Motor. (See Technical Data Sheet)

E. Pump and blower motors shall be TEFC construction with 40°C rise rating. Motor starters shall be housed in NEMA 1 enclosures and are factory installed and wired.

Section 3 - PLANT CONTROL

3.01 PLANT CONTROL - GENERAL

The treatment plant manufacturer shall furnish a control panel containing all necessary control functions and internal wiring. The controls shall be completely assembled and mounted in a NEMA 4 enclosure. The control panel shall provide automatic starting and stopping of the plant, based on clearwell level.

The control system consisting of the main panel, all gauges, pressure switches, pressure regulators, coagulant controller, and all other devices except where remote location is necessary, shall be mounted on a fabricated modular backing plate constructed of painted carbon steel. All interconnecting wiring and piping on the control station itself to be made by the filter manufacturer prior to shipment. All other interconnecting wiring and piping is by the contractor.

The control system shall provide means for automatically initiating a flush cycle for each Adsorption Clarifier by a timeclock or preset adjustable clarifier headloss pressure switch. An interlock shall be provided so that only one unit can be flushed at a time. Override of the automatic flush initiation shall be provided to allow manual flushing of each unit by a selector switch. During the flush cycle, collected solids shall be removed by proper sequencing of valves and the blower. Return to service shall be automatic.

The control system shall provide means for automatically initiating backwash and air scouring of each Mixed Media Filter by a timeclock or a preset filter headloss switch. An interlock shall be provided so that only one filter can backwash at a time (if necessary). Override of the automatic backwash initiation shall be provided to allow manual backwash of each unit by a selector switch. Flushing of the corresponding Adsorption

Clarifier can be initiated automatically (if selected by the plant operator). The control system shall automatically sequence valves, blowers, and pumps during the backwash cycle. Return to service shall be automatic.

The control system will also automatically initiate a backwash on effluent high turbidity and will shut the plant down and initiate an alarm should the backwash fail to substantially reduce effluent turbidity after an operator selected time delay setting.

NOTE: A three-point clearwell level switch supplied by the contractor will stop production of water upon high level, prevent backwash on low level, and cancel backwash on low-low level.

3.02 AUTOMATIC CHEMICAL CONTROL

Chemical addition shall be provided by the Basic Aquaritrol PLC Program portion of the control program. The controller shall be capable of automatically changing chemical dosage by pacing chemical feeders to maintain plant effluent turbidity at an established setpoint. The Contractor shall provide for the services of the supplier of this equipment to check out installation prior to plant start-up and to accurately calibrate related equipment.

A. Control Inputs:

Effluent Turbidity

Each tank shall have one turbidimeter with solenoid valve. The Basic Aquaritrol PLC Program shall receive a 4-20 mA signal from the automatically selected filter effluent turbidimeter and shall adjust the coagulant dosage to maintain this signal at the setpoint. The unit shall also include an adjustable timelag from the point of chemical addition to the point of turbidity measurement to assure that the system is responding accurately to current treatment conditions before another change is initiated. The setpoint shall be manually adjustable by the plant operator from the PLC programming keyboard.

B. Outputs:

An analog output to the System Control Panel will provide drive to a solenoid type coagulant pump.

C. Caustic Feed:

The operator shall be able to feed caustic at a fixed, but adjustable, ratio to the coagulant feed. Output to the caustic feed pump(s) are variable frequency contact closures providing drive to a solenoid type pump.

Section 4 - Chemical Mixing and Feed Systems – By Others

Section 5 - Execution

5.01 PREASSEMBLY

The TM-350A installation requirements will include proper location of the unit on the base pad and completion of electrical and piping connections to and from the unit, as well as field installation of clarifier media, filter media.

5.02 DELIVERY OF EQUIPMENT

A. Equipment supplied under this section shall not be delivered to the site until construction has progressed to the point where installation may properly commence.

5.03 INSTALLATION

A. The Modular Water Treatment System shall be installed as shown on the Contract Drawings and specified herein.

B. The Manufacturer shall be present during placement of filter Mixed Media that is not pre-installed.

C. The Manufacturer shall inspect the installation of all equipment in this section prior to start-up in order to verify that the equipment has been properly installed and operates properly as a system and individually.

D. The Manufacturer after the equipment has been properly installed shall calibrate the equipment with the Owner's operator present.

** E. The Manufacturer's representative shall be present for ___ day's ___ trips of installation assistance described above.

5.04 TESTING (Optional)

A. The Installing Contractor shall start and operate the equipment in automatic mode for a 48 hour operating period to demonstrate that the equipment has been properly installed and will function as specified herein. An Equipment Manufacturers Representative will be available onsite to provide assistance 12 of every 24 hours. In the event that the system fails to operate automatically the Installing Contractor will correct the problem and retest for 48 hours.

5.05 TRAINING

A. After start-up, the Manufacturer shall furnish the service of a competent technical service representative one month after Contractor's start-up to instruct the Owner's personnel in the operation and maintenance of the equipment for a three day period during one trip.

NOTE: Locations marked with "**" are variables depending on the model Trimite system and number being specified.

Project : 310036 NASA JPL, Pasadena, CA
BOM Pos.: 0 - 9999
Customer: I00210 USF/Envirex

I/C TM-350A w/tritons

Status : Active
Start Date: 03-09-04
End Dt :

Manufactured Item: 3100360000 **TRIMITE TM-350A SYSTEM** **BOM Unit: 1 ea**

Pos.	Item Code	Description	Item Type	Length in]	Width [in]	No.of Units	Net Quantity	Un.	Scrap [%]	Wrh	Opr.	Ph.	Extra Info
10	3100364011	FIELD ASSY TM-350A UNIT#1	Cu				1.0000	ea		WH		N	
20	3100364021	SHOP ASSY TM-350A UNIT#1	Cu				1.0000	ea		WH		N	
	Item Text: SEE DRAWING 3100364021												
30	3100369001	CALCS SEISMIC ZONE 4 TM-350	Cu				1.0000	ea		WH		N	
	Item Text: CALCULATIONS FOR TM-350A TO MEET SEISMIC ZONE 4 REQUIREMENTS M.W. SAUSSE & CO., INC. CONTACT: TORBJORN HELLAND P.E. PHONE: 661-257-3311 E-MAIL: TQHELLAND@MWSAUSSE.COM												
60	3100369000	KIT INSTALLATION TRIMITE	Cu				1.0000	ea		WH		N	
	Item Text: REF 129240												
70	ZZZENG990	ESTIMATED ENGINEERING HOURS	Cu				1.0000	ea		WH		N	

CUSTOMIZED BILL OF MATERIAL

Project : 310036 NASA JPL, Pasadena, CA
BOM Pos.: 0 - 9999
Customer: I00210 USF/Envirex

I/C TM-350A w/tritons

Status : Active
Start Date: 03-09-04
End Dt :

Manufactured Item: 3100369000 **KIT INSTALLATION TRIMITE** **BOM Unit: 1 ea**

Pos.	Item Code	Description	Item Type	Length in]	Width [in]	No.of Units	Net Quantity	Un.	Scrap [%]	Wrh	Opr.	Ph.	Extra Info
		REF 129240											
10	8323	ADHESIVE SPRAY SUPER77 3M CO	St				1.0000	ea		WH		N	
		Item Text: ADHESIVE SPRAY-SUPER 77 3M COMPANY, 17 OZ CAN SATTERLEE # 10077 OPT											
20	1000567	PAINT TOUCH UP TANK KIT	St				1.0000	ea		PN		N	
		Item Text: TOUCH-UP PAINT KIT SHERWIN-WILLIAMS DURA-PLATE 235 NSF COLOR: OFF-WHITE ********** * Packaged as Kits (1 Gal. A & 1 Qt. B per Kit) * ********** .											
30	1000718	PAINT SW REDUCER R7K104	Cu				1.0000	ea		PN		N	
40	288010356	MODEM US ROBOTICS 56K	St				1.0000	ea		IA		N	
		Item Text: MODEM, EXTERNAL US ROBOTICS 56K Manufacturer: US ROBOTICS Mfr Part No.: USR - 5686E Vend Part No: CDW - 389825 Size : 56k											
50	L0S-35	CABLE COMM #CA-5191-120	St				1.0000	ea		WH		N	
		Item Text: CUSTOM COMMUNICATION CABLE MILES TECH PART # CA-5191-120 PER DRAWING # L0S-35 ((MODEM TO KOYO DL-340 CPU COMMUNICATIONS))											
70	1000295	KIT CALIBRATION HACH 1720	St				1.0000	ea		WH		N	
		Item Text: STABLCAL STABILIZED FORMAZIN INCLUDES 4 L EACH OF <0.1 NTU AND 20 NTU STANDARDS HACH 26596-00											
80	95797	CYLINDER CALIBRATION HACH 1720	St				1.0000	ea		WH		N	

Project : 310036 NASA JPL, Pasadena, CA
BOM Pos.: 0 - 9999
Customer: I00210 USF/Envirex

I/C TM-350A w/tritons

Status : Active
Start Date: 03-09-04
End Dt :

Manufactured Item: 3100369000 **KIT INSTALLATION TRIMITE** **BOM Unit: 1 ea**

REF 129240

Item Text
Calibration Cylinder
for Hach 1720 Series Process Turbidimeters
Hach # 44153-00

Note: (2) cylinders are required for calibration operation

Pos.	Item Code	Description	Item Type	Length in]	Width [in]	No.of Units	Net Quantity	Un.	Scrap [%]	Wrh	Opr.	Ph.	Extra Info
100	3100368034	PANEL OUTLET ASSY TM-350A	Cu				1.0000	ea		WH		N	

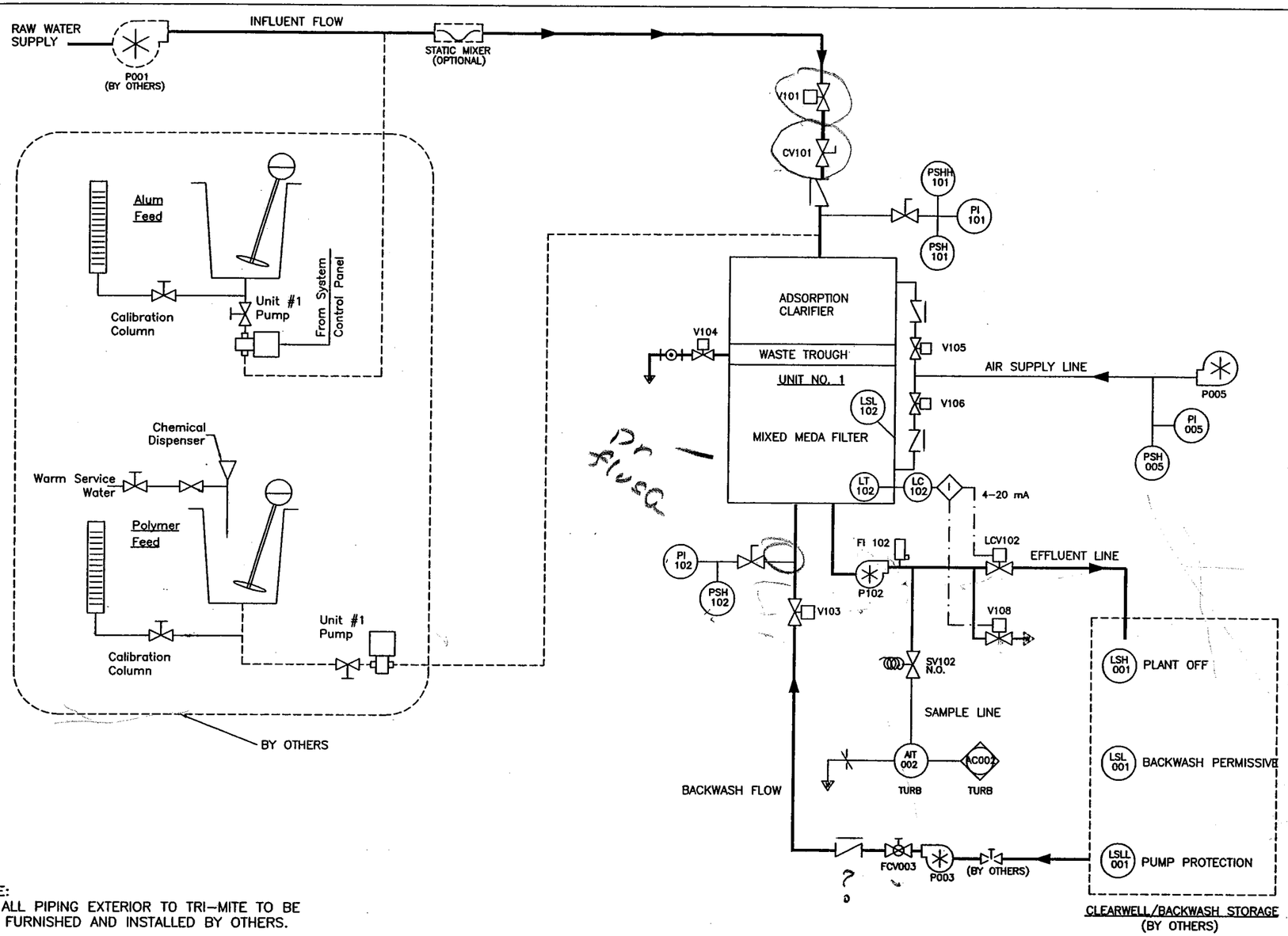

W WASTE CONNECTION – (CONNECTION TO DISPOSAL BY OTHERS.)

P001 – INFLUENT PUMP (BY OTHERS)
P003 – BACKWASH PUMP
P005 – AIR BLOWER
V101 – UNIT INFLUENT
V102 – UNIT EFFLUENT
V103 – BACKWASH SUPPLY
V104 – WASTE
V105 – A/C AIR WASH
V106 – M/M AIR WASH
SV107 – FILTER DRAIN–DOWN
V108 – FILTER TO WASTE (OPTIONAL)
SV102 – TURBIDITY SAMPLE VALVE
LCV102 – LEVEL CONTROL VALVE
LSL102 – FILTER DRAIN–DOWN\MEDIA PROTECTION SWITCH
AC002 – COAGULANT FEED CONTROLLER
LSL – LEVEL SWITCH LOW
LSLL – LEVEL SWITCH LOW LOW
LSH – LEVEL SWITCH HIGH
PSH – PRESSURE SWITCH HIGH
PSHH – PRESSURE SWITCH HIGH HIGH
PI – PRESSURE INDICATOR
PSL – PRESSURE SWITCH LOW
AIT – ANALYSIS INDICATING TRANSMITTER
HKV – HAND CONTROL VALVE
SV – SOLENOID VALVE
FI – FLOW INDICATOR
LT – LEVEL TRANSMITTER
I – INTERLOCK
LC – LEVEL CONTROLLER

NOTE:
1. ALL PIPING EXTERIOR TO TRI–MITE TO BE FURNISHED AND INSTALLED BY OTHERS.

2. CLEARWELL LEVEL SWITCHES FURNISHED AND INSTALLED BY OTHERS.

REV	DESCRIPTION	DATE	DWN	CHKD	APVD	ECN

COMPANY CONFIDENTIAL
THIS DOCUMENT AND ALL INFORMATION CONTAINED HEREIN ARE THE PROPERTY OF THE USFILTER AND/OR ITS AFFILIATES ("USF"). THE DESIGN CONCEPTS AND INFORMATION CONTAINED HEREIN ARE PROPRIETARY TO USF AND ARE SUBMITTED IN CONFIDENCE. THEY ARE NOT TRANSFERABLE AND MUST BE USED ONLY FOR THE PURPOSE FOR WHICH THE DOCUMENT IS EXPRESSLY LOANED. THEY MUST NOT BE DISCLOSED, REPRODUCED, LOANED OR USED IN ANY OTHER MANNER WITHOUT THE EXPRESS WRITTEN CONSENT OF USF. IN NO EVENT SHALL THEY BE USED IN ANY MANNER DETRIMENTAL TO THE INTEREST OF USF. ALL PATENT RIGHTS ARE RESERVED. UPON THE DEMAND OF USF, THIS DOCUMENT, ALONG WITH ALL COPIES AND EXTRACTS, AND ALL RELATED NOTES AND ANALYSES, MUST BE RETURNED TO USF OR DESTROYED, AS INSTRUCTED BY USF. ACCEPTANCE OF THE DELIVERY OF THIS DOCUMENT CONSTITUTES AGREEMENT TO THESE TERMS AND CONDITIONS.

DESIGNER	DATE
CHECKER	DATE
ENGINEER SJT	DATE 04/06/04
MANAGER	DATE
FILE: KOF–3	
SCALE: NTS	

TITLE TRIMITE PACKAGED WATER TREATMENT PLANT
TM–350A FLOW DIAGRAM

CLIENT NASA JPL
PASADENA, CA

USFilter
441 MAIN STREET
STURBRIDGE, MA 01562
TEL: 1–800–636–2674

PROJECT	CODE	DRAWING	SHEET	REV
310036		3100360101	1 OF 1	1

BAR = 1" AT PLOT SCALE
INTL. REF:
STD: 2–0600–11X17B

CUSTOMIZED BILL OF MATERIAL

Project : 310036 NASA JPL, Pasadena, CA
BOM Pos.: 0 - 9999
Customer: I00210 USF/Envirex

I/C TM-350A w/tritons

Status : Active
Start Date: 03-09-04
End Dt :

Pos.	Item Code	Description	Item Type	Length in]	Width [in]	No.of Units	Net Quantity	Un.	Scrap [%]	Wrh	Opr.	Ph.	Extra Info
Manufactured Item:	**3100368034**	**PANEL OUTLET ASSY TM-350A**											**BOM Unit: 1 ea**
10	033034812	PL 3003 0.190x48x144	St	14.00	12.00	1	0.0243	812	15	MR		N	
20	74643	NAMEPLATE "MIXER OUTLETS"	St				1.0000	ea		WH		Y	
		Item Text: NAMEPLATE "MIXER OUTLETS" PER MF SPEC PS-4 STYLE A											
30	74968	NAMEPLATE "CHEMICAL FEEDER"	St				1.0000	ea		WH		Y	
		Item Text: NAMEPLATE "CHEMICAL FEEDER" STYLE A, PER MF SPEC. PS-4											
50	74640	RECEPTACLE DUPLEX 15A/125V	St				4.0000	ea		VMW		N	
		Item Text: RECEPTACLE DUPLEX 15A/125V HUBBELL # 5262											
60	74638	BOX OUTDOOR COVER 2-GANG AL	St				2.0000	ea		WH		N	
		Item Text: OBOX OUTDOOR COVER 2-GANG AL, RED DOT # 2CCD, FOR USE WITH DUPLEX RECEPTACLE											
70	74637	BOX OUTDOOR 2-GANG 3-HOLE AL	St				2.0000	ea		WH		N	
		Item Text: OBOX OUTDOOR, 2-GANG, 3-HOLE, AL, GRAY FINISH, 0.5DIA, RED DOT # 21H31 ALTERNATE: 5333-0 RACO-BELL											

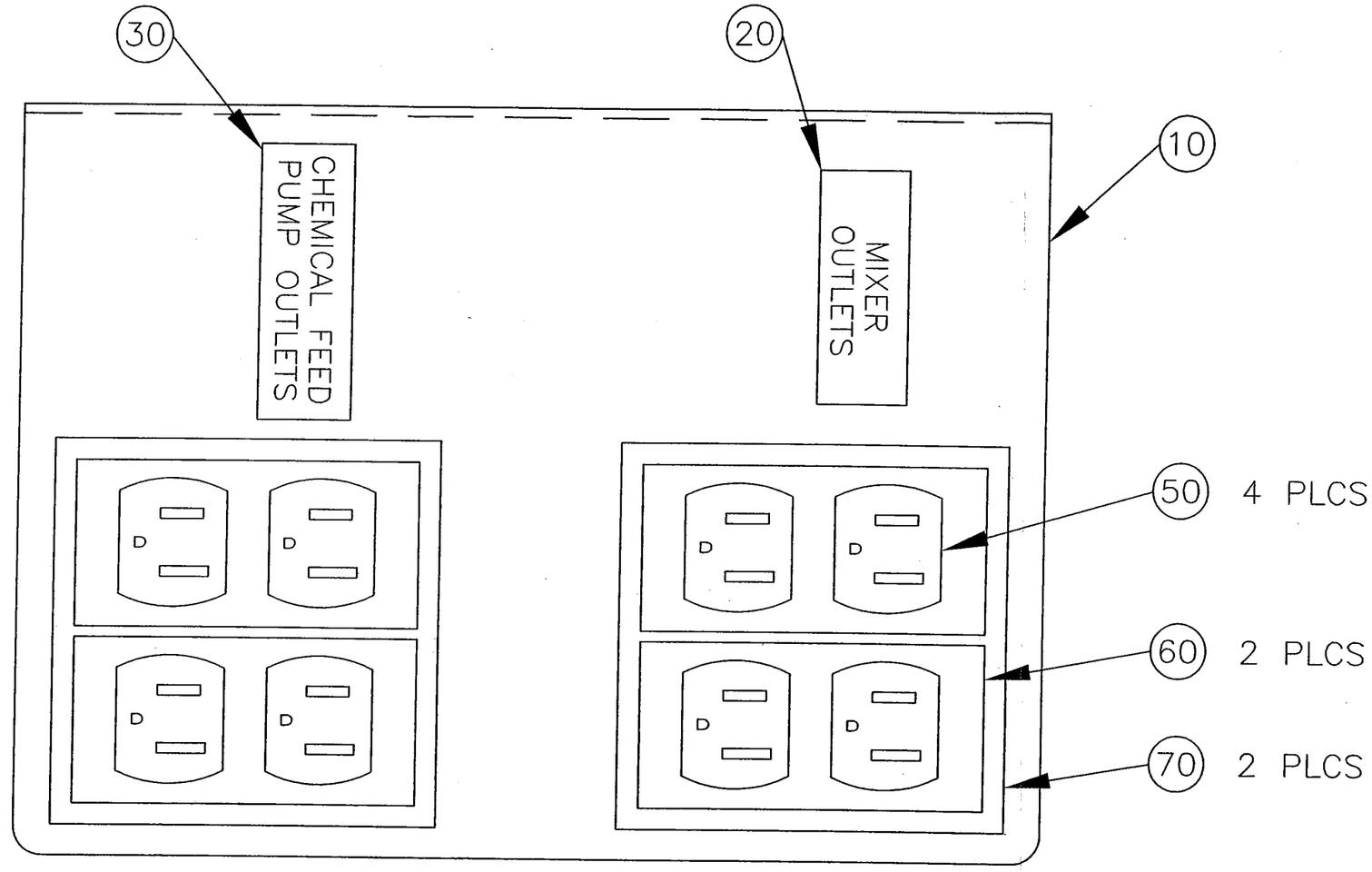

REV	DESCRIPTION	DATE	DWN	CHKD	APVD	ECN

COMPANY CONFIDENTIAL
THIS DOCUMENT AND ALL INFORMATION CONTAINED HEREIN ARE THE PROPERTY OF THE USFILTER AND/OR ITS AFFILIATES ("USF"). THE DESIGN CONCEPTS AND INFORMATION CONTAINED HEREIN ARE PROPRIETARY TO USF AND ARE SUBMITTED IN CONFIDENCE. THEY ARE NOT TRANSFERABLE AND MUST BE USED ONLY FOR THE PURPOSE FOR WHICH THE DOCUMENT IS EXPRESSLY LOANED. THEY MUST NOT BE DISCLOSED, REPRODUCED, LOANED OR USED IN ANY OTHER MANNER WITHOUT THE EXPRESS WRITTEN CONSENT OF USF. IN NO EVENT SHALL THEY BE USED IN ANY MANNER DETRIMENTAL TO THE INTEREST OF USF. ALL PATENT RIGHTS ARE RESERVED. UPON THE DEMAND OF USF, THIS DOCUMENT, ALONG WITH ALL COPIES AND EXTRACTS, AND ALL RELATED NOTES AND ANALYSES, MUST BE RETURNED TO USF OR DESTROYED, AS INSTRUCTED BY USF. ACCEPTANCE OF THE DELIVERY OF THIS DOCUMENT CONSTITUTES AGREEMENT TO THESE TERMS AND CONDITIONS.

DESIGNER	DATE
CHECKER	DATE
ENGINEER SJT	DATE 04/05/04
MANAGER	DATE
FILE: SOA-3	
SCALE: NTS	

TITLE OUTLET PANEL ASSEMBLY

CLIENT NASA JPL
PASADENA, CA

USFilter
441 MAIN STREET
STURBRIDGE, MA 01562
TEL: 1-800-636-2674

PROJECT	CODE	DRAWING	SHEET	REV
310036		3100368034	1 OF 1	1

STD: 2-0600-11X17B INTL REF: BAR = 1" AT PLOT SCALE

FIELD ASSEMBLY

1 Field Assembly – Unit #1
Drawing #3100364011
BOM #3100364011

2 Media Design - Filter
Drawing #K0A-11B
BOM # K0A-11B

CUSTOMIZED BILL OF MATERIAL

Project : 310036 NASA JPL, Pasadena, CA — I/C TM-350A w/tritons
BOM Pos.: 0 - 9999
Customer: I00210 USF/Envirex

Status : Active
Start Date: 03-09-04
End Dt :

Manufactured Item: 3100364011 — **FIELD ASSY TM-350A UNIT#1** — **BOM Unit: 1 ea**

Pos.	Item Code	Description	Item Type	Length in]	Width [in]	No.of Units	Net Quantity	Un.	Scrap [%]	Wrh	Opr.	Ph.	Extra Info
10	K0A-11B	MEDIA DSN FILTER TM-350A	Cu				1.0000	ea		2		N	
20	K9S-23A	RETAINER MEDIA A TM-350A	Cu				1.0000	ea		WH		N	
30	K9S-23B	RETAINER MEDIA B TM-350A	Cu				1.0000	ea		WH		N	
40	1000539	L 304 3.0x3.0x0.25x71.5	Cu				3.0000	ea		WH		Y	
50	72466	ROD THD 3/4-10x6 IN SS	St				6.0000	ea		VMW		N	
		Item Text: Threaded rod, 3/4"-10NC X 6" long, 18-8 SS, with chamfered ends											
60	254150012	NUT HH 3/4-10 SS	St				18.0000	ea		VMW		N	
70	254200012	WASHER FLAT 3/4 SS	St				12.0000	ea		VMW		N	
80	72252	STRIP 0.25THKx1.5W NEO	St				300.0000	in		WH		N	
		Item Text: STRIP 1/4" THICK X 1-1/2" WIDE, GASKET STRIP 0.25 THICK x 1.5 W NEOPRENE WITH PRESSURE SENSITIVE ADHESIVE ON ONE SIDE RUBATEX # G-207-N (10 foot rolls) Nott Part No. RF109423											
90	72426	STRIP 0.5THKx1.0W NEO	St				74.0000	in		WH		N	
		Item Text: STRIP 1/2" THICK X 1" WIDE, GASKET STRIP 0.5 THICK x 1.0 W NEOPRENE WITH PRESSURE SENSITIVE ADHESIVE ON ONE SIDE RUBATEX # G-207-N (10 foot rolls) Nott Part No. RF109424											
100	78133	MEDIA A/C HDPE 100% RECYCLED	St				140.0000	cf		WH		N	
		Item Text: MEDIA A/C HDPE 100% RECYCLED, MADE FROM RECYCLED MATERIAL (POST INDUSTRIAL - ANY COLOR), EQUIVALENT TO MS-107 WITH THE FOLLOWING INSTRUCTIONS: - COLOR: ANY COLOR - REMARK 1 DOES NOT APPLY - REMARK 2 DOES NOT APPLY											

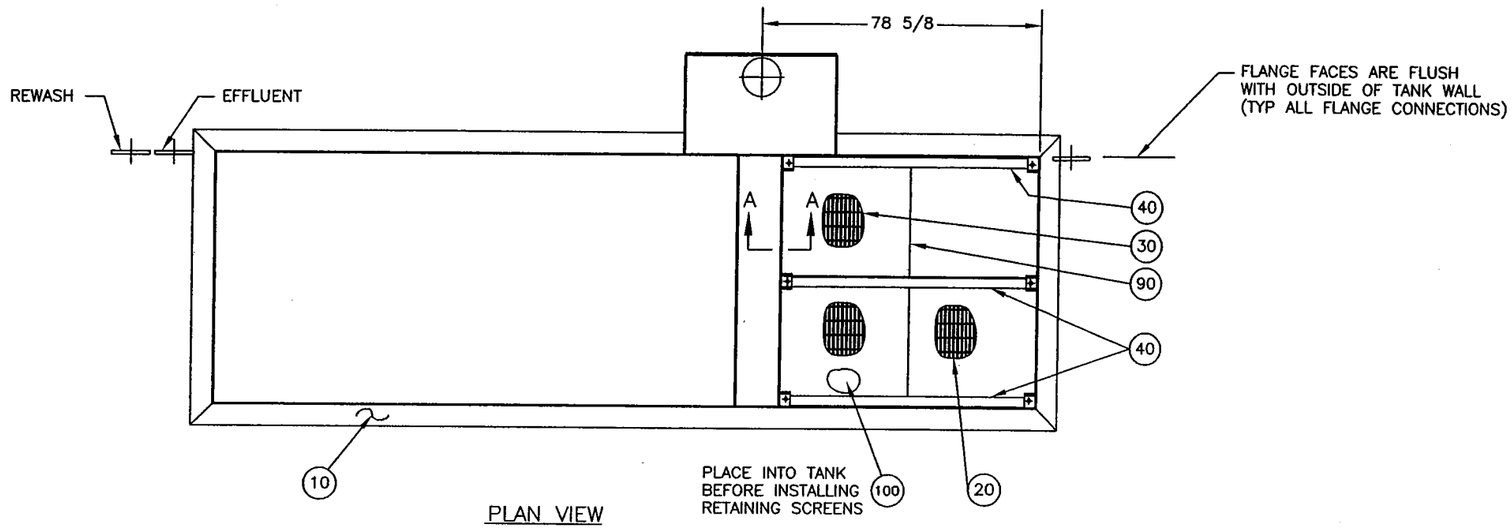

PLAN VIEW

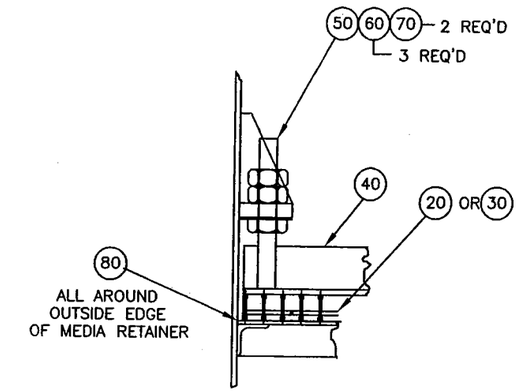

SECTION "A-A"
6 PLCS

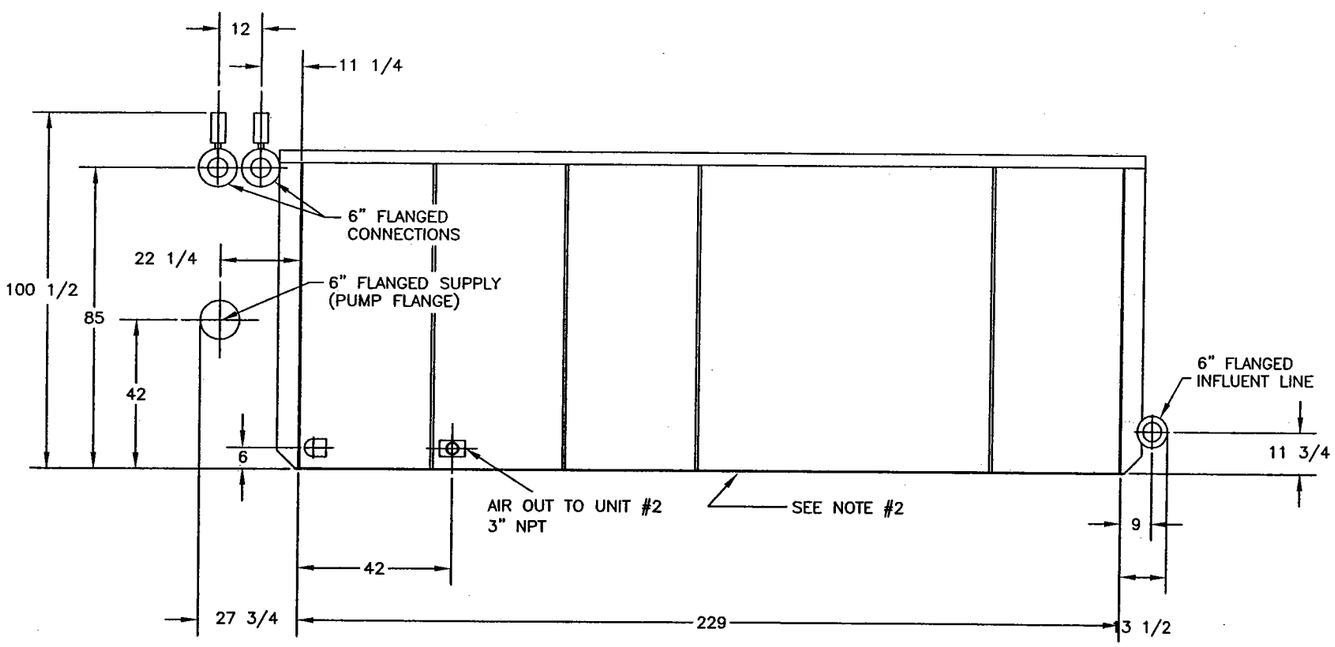

ELEVATION

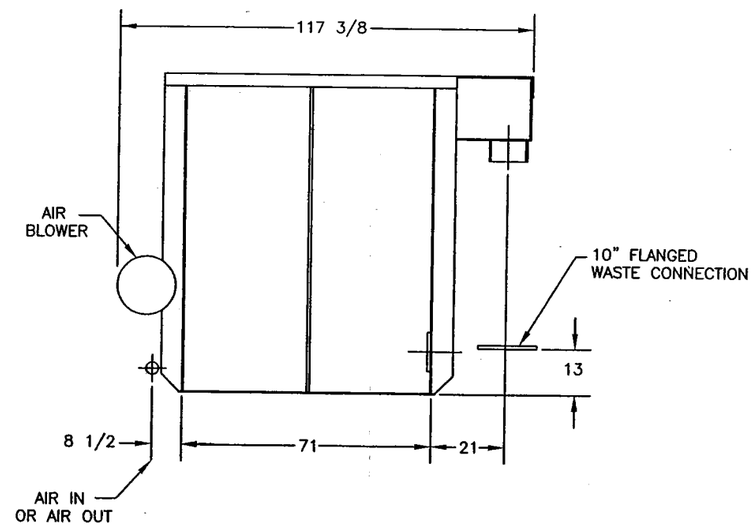

INFLUENT END

NOTES:
1. SEE INDIVIDUAL CHEMICAL FEED ASSY DRAWINGS FOR INSTALLATION DETAILS.
2. CONCRETE BASE PAD TO BE COATED WITH MASTIC TO SEAL BOTTOM OF TANK TO PAD. PLACE TANK ONTO MASTIC BEFORE IT HAS CURED. MASTIC NOT FURNISHED BY MICROFLOC PRODUCTS.
3. TANK IS TO BE LEVEL +/- 1/16 AT INSTALLATION

REV	DESCRIPTION	DATE	DWN	CHKD	APVD	ECN

COMPANY CONFIDENTIAL
THIS DOCUMENT AND ALL INFORMATION CONTAINED HEREIN ARE THE PROPERTY OF THE USFILTER AND/OR ITS AFFILIATES ("USF"). THE DESIGN CONCEPTS AND INFORMATION CONTAINED HEREIN ARE PROPRIETARY TO USF AND ARE SUBMITTED IN CONFIDENCE. THEY ARE NOT TRANSFERABLE AND MUST BE USED ONLY FOR THE PURPOSE FOR WHICH THE DOCUMENT IS EXPRESSLY LOANED. THEY MUST NOT BE DISCLOSED, REPRODUCED, LOANED OR USED IN ANY OTHER MANNER WITHOUT THE EXPRESS WRITTEN CONSENT OF USF. IN NO EVENT SHALL THEY BE USED IN ANY MANNER DETRIMENTAL TO THE INTEREST OF USF. ALL PATENT RIGHTS ARE RESERVED. UPON THE DEMAND OF USF, THIS DOCUMENT, ALONG WITH ALL COPIES AND EXTRACTS, AND ALL RELATED NOTES AND ANALYSES, MUST BE RETURNED TO USF OR DESTROYED, AS INSTRUCTED BY USF. ACCEPTANCE OF THE DELIVERY OF THIS DOCUMENT CONSTITUTES AGREEMENT TO THESE TERMS AND CONDITIONS.

DESIGNER		DATE
CHECKER		DATE
ENGINEER	SJT	DATE 03/30/04
MANAGER		DATE -
FILE: KGA-3		
SCALE: NTS		

TITLE TRI-MITE TM350A FIELD ASSEMBLY - UNIT #1

CLIENT NASA JPL
PASADENA, CA

USFilter
441 MAIN STREET
STURBRIDGE, MA 01562
TEL: 1-800-636-2674

PROJECT	CODE	DRAWING	SHEET	REV
310036		3100364011	1 OF 1	1

BAR = 1" AT PLOT SCALE
INTL REF:
STD: 2-0600-11X17B

Pos.	Item Code	Description	Effect. Date	Expiry Date	Length [in]	Width [in]	No.of Units	Net Quantity	Un.	Scpf [%]	Wrh	Opr	Ph.	Extra Info
Manufactured Item	**: K0A-11B**	**MEDIA DSN FILTER TM-350A**					**Item Owner:**					**BOM Unit:**		**1 ea**
10	72279	ANTHRACITE MS-4 ES 1	01-23-01					105.0000	cf		2		N	
	Item Text: ANTHRACITE MS-4 ES 1.0 - 1.1mm, U. C. OF 1.70 OR LESS Molecular hardness 3.0 +/- 0.30													
20	72281	SAND SILICA MS-18	01-23-01					56.0000	cf		2		N	
	Item Text: SAND SILICA PER SPECIFICATION MS-18 ES 0.35-0.45mm, UC 1.4 OR LESS, SPECIFIC GRAVITY 2.6 +/- 0.05 100LB BAGS													
30	73773	SAND GARNET MS-21	01-23-01					25.0000	cf		2		N	
	Item Text: SAND GARNET MS-21 ES 0.20-0.32mm, Uniformity coefficient 2.2 or less Specific gravity 3.80 minimum 100LB BAG NOTE: This material weighs 122 lb./cu. ft.													

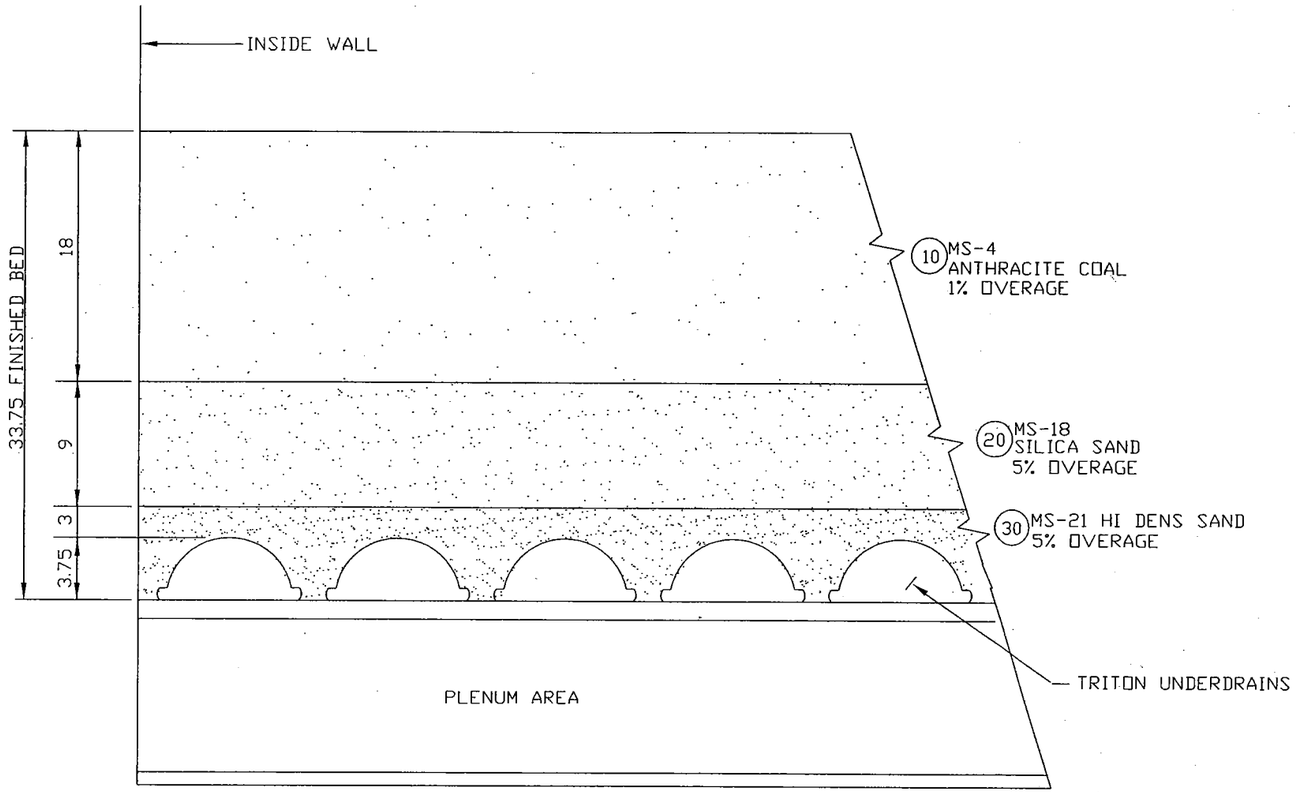

B.O.M. QUANTITIES ARE FOR ONE TANK ONLY

UNIT DESIGNATION	TM-175A	TM-350A
BED AREA (SQ. FT. EACH FILTER)	35 SQ FT	70 SQ FT
NUMBER OF TRITON PVC UNDERDRAINS	6	12
NET VOLUME OF MS-4 REQUIRED *	52.5 CU FT	105 CU FT
NET VOLUME OF MS-18 REQUIRED *	26.4 CU FT	52.75 CU FT
NET VOLUME OF MS-21 REQUIRED *	11.65 CU FT	23.3 CU FT
BACKWASH RATE AT 60°F. (SEE NOTE 5)	15 GPM/FT ^{2}	
BACKWASH FLOW AT 60° F	525 GPM	1050 GPM
MEDIA PLACEMENT WATER QUANTITY REQ'D AT 60° F	15,750 GPM (3 B/W'S @ 10 MIN EACH)	31,500 GAL./TANK (3 B/W'S @ 10 MIN EACH)

* VOLUME DOES NOT INCLUDE OVERAGE

NOTES:

1A FILTER MEDIA BAGS MUST BE PROTECTED FROM THE WEATHER AND STACKED NOT MORE THAN 5(FIVE) HIGH TO PRECLUDE BREAKAGE.

1B WHEN BULK SHIPMENT IS USED, FILTER MEDIA MUST BE PROTECTED FROM THE WEATHER AND COVERED TO PREVENT WIND-BLOWN LOSS.

2 DURING MEDIA PLACEMENT, APPROXIMATELY TWO BACKWASH & SKIMMING OPERATIONS WILL BE REQUIRED. EACH BACKWASH WILL BE ABOUT A 10 MINUTE DURATION.

3 FILTER MEDIA PLACEMENT MUST BE DONE UNDER CPC TECHNICAL DIRECTION AFTER ALL ELECTRICAL, HYDRAULIC AND CONTROL SYSTEMS ARE INSTALLED AND/OR REPAIRED & OPERABLE PRIOR TO ARRIVAL OF TECHNICAL DIRECTOR.

4 PLACEMENT TOLERANCE:
THE FOLLOWING TOLERANCES SHALL APPLY TO MEDIA PLACEMENT.

3" LAYERS ± 1/2"
9" & DEEPER ± 1"
FINISHED FILTER BED ± 1"

ALL LAYERS OF MEDIA TO BE LEVEL IN ACCORDANCE WITH CPC MEDIA PLACEMENT SPECIFICATIONS.

5 FILTER GUARANTEE REQUIRES CPC TECHNICAL DIRECTION DURING MEDIA PLACEMENT.

REV	DESCRIPTION	DATE	DWN	CHKD	APVD	ECN

COMPANY CONFIDENTIAL
THIS DOCUMENT AND ALL INFORMATION CONTAINED HEREIN ARE THE PROPERTY OF THE USFILTER AND/OR ITS AFFILIATES ("USF"). THE DESIGN CONCEPTS AND INFORMATION CONTAINED HEREIN ARE PROPRIETARY TO USF AND ARE SUBMITTED IN CONFIDENCE. THEY ARE NOT TRANSFERABLE AND MUST BE USED ONLY FOR THE PURPOSE FOR WHICH THE DOCUMENT IS EXPRESSLY LOANED. THEY MUST NOT BE DISCLOSED, REPRODUCED, LOANED OR USED IN ANY OTHER MANNER WITHOUT THE EXPRESS WRITTEN CONSENT OF USF. IN NO EVENT SHALL THEY BE USED IN ANY MANNER DETRIMENTAL TO THE INTEREST OF USF. ALL PATENT RIGHTS ARE RESERVED. UPON THE DEMAND OF USF, THIS DOCUMENT, ALONG WITH ALL COPIES AND EXTRACTS, AND ALL RELATED NOTES AND ANALYSES, MUST BE RETURNED TO USF OR DESTROYED, AS INSTRUCTED BY USF. ACCEPTANCE OF THE DELIVERY OF THIS DOCUMENT CONSTITUTES AGREEMENT TO THESE TERMS AND CONDITIONS.

DESIGNER DATE
CHECKER DATE -
ENGINEER DATE -
MANAGER DATE -
FILE: K0a-11B
SCALE: NTS

TITLE TRI-MITE TM-175A & TM-350A
MEDIA DESIGN - FILTER

CLIENT _
_

USFilter
441 MAIN STREET
STURBRIDGE, MA 01562
TEL: 1-800-636-2674

PROJECT	CODE	DRAWING	SHEET	REV
		K0a-11B	1 OF 1	-

BAR = 1" AT PLOT SCALE
INTL REF:
STD: 2-0600-11X17B

UNITS #1 - #2

1 Shop Assembly - Unit #1
Drawing #3100364021
BOM #3100364021

2 Filter Effluent Turbidimeter Assembly – Unit #1
Drawing #A0A-57
BOM #A0A-57

3 Filter Headloss Switch Assembly – Unit #1
Drawing #L0A-32
BOM #L0A-32A

4 Clarifier Pressure Switch Assembly – Unit #1
Drawing #L0A-33
BOM #L0A-33A

5 Blower Pressure Switch Assembly – Unit #1
Drawing #L0A-35
BOM # L0A-35

CUSTOMIZED BILL OF MATERIAL

Project : 310036 NASA JPL, Pasadena, CA
BOM Pos.: 0 - 9999
Customer: I00210 USF/Envirex

I/C TM-350A w/tritons

Status : Active
Start Date: 03-09-04
End Dt :

Pos.	Item Code	Description	Item Type	Length in]	Width [in.]	No.of Units	Net Quantity	Un.	Scrap [%]	Wrh	Opr.	Ph.	Extra Info
Manufactured Item:	**3100364021**	**SHOP ASSY TM-350A UNIT#1**											**BOM Unit: 1 ea**
		SEE DRAWING 3100364021											
1	>3100364051	TANK TM-350A FABRICATION	Cu				1.0000	ea		WH		N	
		Item Text: SEE DRAWING 3100364051											
2	>3100368031	PANEL ASSY CONTROL TM 350A	Cu				1.0000	ea		WH		N	
		Item Text: SEE DRAWING 3100368031											
3	K9S-19	TRITON 68.0 005 PVC	Cu				12.0000	ea		WH		N	
		Item Text: TRITON 68.0 005 PVC											
4	10549052	PLUG PIPE 0.5NPT SS	Cu				2.0000	ea		WH		N	
5	K9S-7	HEADER INF DISTRIBUTN TM-350A	Cu				1.0000	ea		WH		N	
6	K9S-10-2	LATERAL INFLUENT #2 TM-350A	Cu				1.0000	ea		WH		N	
7	K9S-6	HEADER AIR CLARIFIER TM-350A	Cu				1.0000	ea		WH		N	
8	K9S-8	LATERAL AIR CLARIFIER TM-350A	Cu				4.0000	ea		WH		N	
9	3100364053	BRACKET SUPRT EFF PIPE TM-350A	Cu				2.0000	ea		WH		Y	
		Item Text: SEE DRAWING 3100364053											
10	K9S-12	BRACKET SUPRT INF PIPE TM-350A	Cu				2.0000	ea		WH		N	
11	K9S-21	BRACKET MTG B/W PUMP TM-350A	Cu				1.0000	ea		WH		N	
12	3100364052	BRACKET MTG EFF PUMP TM-350A	Cu				1.0000	ea		WH		Y	
13	3100364056	BRACKET MTG LEVEL TRANSMITTER	Cu				1.0000	ea		WH		N	
		Item Text: SEE DRAWING 3100364056											
14	3100364101	PUMP CENT 1050GPM 44TDH 4x6x13	Cu				1.0000	ea		WH		N	
		Item Text: CENTRIFUGAL PUMP, 1050 GPM, 44 TDH, END SUCTION, CLOSE COUPLED, SINGLE STAGE, ENCLOSED IMPELLER PUMP SIZE: 4X6-13 MATERIAL: BRONZE FITTED DRIVER: HERTZ/POLE/RPM: 60/4/1750 VOLTAGE: 208/230/460 HP RATING: 25 DRIVER: 3 PH, TEFC IMPELLER DIA: 10 1/4 MANUFACTURER: GOULDS											

> Purchased item has BOM

Project : 310036 NASA JPL, Pasadena, CA
BOM Pos.: 0 - 9999
Customer: I00210 USF/Envirex

I/C TM-350A w/tritons

Status : Active
Start Date: 03-09-04
End Dt :

Pos.	Item Code	Description	Item Type	Length in]	Width [in]	No.of Units	Net Quantity	Un.	Scrap [%]	Wrh	Opr.	Ph.	Extra Info
Manufactured Item:	**3100364021**	**SHOP ASSY TM-350A UNIT#1**										**BOM Unit:**	**1 ea**

MODEL: 3656, GROUP M
PRODUCT CODE: 15BF2P5J0
* PROVIDE THE PUMP WITH RIGHT BOTTOM HORIZONTAL DISCHARGE
AS VIEWED FROM THE INLET END.

(INSTRUCTION MANUALS & PERFORMANCE CURVE REQUIRED)

15	3100364102	PUMP CENT 350GPM 62TDH 3x4x7	Cu				1.0000	ea		WH		N

Item Text

CENTRIFUGAL PUMP, 350 GPM, 62 TDH, END SUCTION,
CLOSE COUPLED, SINGLE STAGE, ENCLOSED IMPELLER
PUMP SIZE: 3X4-7
MATERIAL: BRONZE FITTED
DRIVER: HERTZ/POLE/RPM: 60/2/3500
VOLTAGE: 208/230/460
HP RATING: 7.5
DRIVER: 3 PH, TEFC
IMPELLER DIA: 5 1/8
MANUFACTURER: GOULDS
MODEL: 3656, GROUP S
PRODUCT CODE: 6BF1K5E0
* PROVIDE THE PUMP WITH RIGHT BOTTOM HORIZONTAL DISCHARGE
AS VIEWED FROM THE INLET END.

(INSTRUCTION MANUALS & PERFORMANCE CURVE REQUIRED)

16	3100364103	BLOWER RGN 163SCFM 3.2PSI TEFC	Cu				1.0000	ea		2		N

Item Text

BLOWER REGENERATIVE 163 SCFM @ 3.2 PSIG, MAX PRESSURE IS
4.68 PSIG, 7.5 HP-208-230/460VAC-60HZ-3PH TEFC
FPZ# SCL 50SH-7.5-3
(MANUAL LITERATURE REQUIRED)

18	97505	VALVE B/F 10 WFR ELEC	Cu				1.0000	ea		WH		N

Item Text

VALVE BUTTERFLY, 10" WAFER, ELECTRIC,
CAST IRON BODY,
ALUMINUM BRONZE DISC UNDERCUT FOR 50 PSI SERVICE,
EPDM SEATS, 416SS STEM,
ACETAL BEARINGS, BUNA-N SEALS,

> Purchased item has BOM

Project : 310036 NASA JPL, Pasadena, CA
BOM Pos.: 0 - 9999
Customer: I00210 USF/Envirex

I/C TM-350A w/tritons

Status : Active
Start Date: 03-09-04
End Dt :

Pos.	Item Code	Description	Item Type	Length in]	Width [in]	No.of Units	Net Quantity	Un.	Scrap [%]	Wrh	Opr.	Ph.	Extra Info
Manufactured Item:	**3100364021**	**SHOP ASSY TM-350A UNIT#1**										**BOM Unit:**	**1 ea**
		BRAY SERIES 30/120RD, WITH ACTUATOR, ELECTRIC, 120 VAC/60 HZ/SINGLE PHASE, NEMA 4, 4X, IP65 ENCLOSURE, 2000 INCH LBS, 15 SECOND TRAVEL, INTERMITTENT DUTY MOTOR, ON/OFF SERVICE, BRAY SERIES 70/0202 WITH (2) SPDT/DB TRAVEL LIMIT SWITCHES, 10A @ 120 VAC, MANUAL OVERRIDE HANDWHEEL (MANUAL LITERATURE REQUIRED)											
19	108327	VALVE B/F 6 WFR ELEC	Cu				1.0000	ea		WH		N	
		Item Text VALVE, BUTTERFLY, 6" WAFER, ELECTRIC, CAST IRON BODY, ALUMINUN BRONZE DISC UNDERCUT FOR 50 PSIG SERVICE, EPDM SEATS, 416SS STEM, ACETAL BEARINGS, BUNA-N SEALS, BRAY SERIES 30/120RD, WITH ACTUATOR, ELECTRIC, 120 VAC/60 HZ/SINGLE PHASE, NEMA 4, 4X, IP65 ENCLOSURE, INTERMITTENT DUTY, ON/OFF SERVICE, 15 SECOND CYCLE TIME, BRAY SERIES 70/0082, WITH (2) SPDT/DB LIMIT SWITCHES, 10A @ 120 VAC, MANUAL OVERRIDE HANDWHEEL (MANUAL LITERATURE REQUIRED)											
20	72763	VALVE B/F 6 WFR MAN	Cu				1.0000	ea		WH		N	
		Item Text VALVE BUTTERFLY, 6" WAFER, MANUAL OPERATOR, CAST IRON BODY-AL BRONZE DISC UNDERCUT FOR 50 PSI SERVICE- EPDM SEAT-4166SS STEM-ACETAL BRG-BUNA-N SEAL- BRAY SERIES 30/120RD WITH MANUAL HANDWHEEL GEAR OPERATOR-BRAY SERIES 4 (MANUAL LITERATURE REQUIRED)											
21	72767	VALVE B/F 4 WFR ELEC W/POS	Cu				2.0000	ea		WH		N	
		Item Text VALVE, BUTERFLY, 4", WAFER, ELECTIC, WITH POSITIONER, CAST IRON BODY, ALUMINUM BRONZE DISC UNDERCUT FOR 50 PSIG SERVICE, EPDM SEATS, 416SS STEM,											

> Purchased item has BOM

Project : 310036 NASA JPL, Pasadena, CA
BOM Pos.: 0 - 9999
Customer: I00210 USF/Envirex

I/C TM-350A w/tritons

Status : Active
Start Date: 03-09-04
End Dt :

Pos.	Item Code	Description	Item Type	Length in]	Width [in]	No.of Units	Net Quantity	Un.	Scrap [%]	Wrh	Opr.	Ph.	Extra Info

Manufactured Item: 3100364021 **SHOP ASSY TM-350A UNIT#1** **BOM Unit: 1 ea**

ACETAL BEARINGS, BUNA-N SEALS, BRAY SERIES 30/120RD,
WITH ACTUATOR, ELECTRIC 120 VAC/60 HZ/SINGLE PHASE,
NEMA 4, 4X, IP65 ENCLOSURE,
CONTINUOUS DUTY, MODULATING SERVICE,
30 SECOND CYCLE TIME, BRAY SERIES 70/0031
WITH SERVO POSITIONER CARD, 4-20 mADC INPUT,
WITH (2) SPDT/DB LIMIT SWITCHES, 10A @ 120VAC
(MANUAL LITERATURE REQUIRED)

22	121208	VALVE B/F 4 WFR ELEC	Cu				1.0000	ea		WH		N

Item Text
VALVE, BUTTERFLY, 4.0", WAFER, ELECTRIC,
CAST IRON BODY,
ALUMINUN BRONZE DISC UNDERCUT FOR 50 PSIG SERVICE
EPDM SEATS, 416SS STEM,
ACETAL BEARINGS, BUNA-N SEALS, BRAY SERIES 30/120RD,
WITH ACTUATOR, ELECTRIC, 120 VAC/60 HZ/SINGLE PHASE,
NEMA 4, 4X, IP65 ENCLOSURE,
INTERMITTENT DUTY, ON/OFF SERVICE,
15 SECOND CYCLE TIME, BRAY SERIES 70/0031,
WTIH (2) SPDT/DB LIMIT SWITCHES, 10A @ 120VAC,
MANUAL OVERRIDE HANDWHEEL
(MANUAL LITERATURE REQUIRED)

23	72766	VALVE B/F 4 WFR MAN	Cu				1.0000	ea		WH		N

Item Text
VALVE, BUTTERFLY, 4.0", WAFER, MANUAL OPERATOR,
CAST IRON BODY, AL BRONZE DISC UNDERCUT FOR 50PSI SERVICE,
EPDM SEAT, 416SS STEM,
ACETAL BEARINGS, BUNA-N SEALS,
BRAY SERIES 30/120RD,
WITH MANUAL HANDWHEEL GEAR OPERATOR, BRAY SERIES 4
(MANUAL LITERATURE REQUIRED)

24	108323	VALVE B/F 3 WFR ELEC	Cu				2.0000	ea		WH		N

Item Text
VALVE, BUTTERFLY, 3.0", WAFER, ELECTRIC,
CAST IRON BODY,
ALUMINUM BRONZE DISC UNDERCUT FOR 50 PSIG SERVICE,
EPDM SEATS, 416SS STEM,
ACETAL BEARINGS, BUNA-N SEALS, BRAY SERIES 30/120RD,

> Purchased item has BOM

Project : 310036 NASA JPL, Pasadena, CA I/C TM-350A w/tritons Status : Active
BOM Pos.: 0 - 9999 Start Date: 03-09-04
Customer: I00210 USF/Envirex End Dt :

Pos.	Item Code	Description	Item Type	Length in]	Width [in]	No.of Units	Net Quantity	Un.	Scrap [%]	Wrh	Opr.	Ph.	Extra Info
Manufactured Item:	**3100364021**	**SHOP ASSY TM-350A UNIT#1**										**BOM Unit:**	**1 ea**
		WITH ACTUATOR, ELECTRIC, 120VAC/60 HZ/SINGLE PHASE, NEMA 4, 4X, IP65 ENCLOSURE, INTREMITTENT DUTY, ON/OFF SERVICE, 30 SECOND CYCLE TIME, BRAY SERIES 70/0031, WITH (2) SPDT/DB LIMIT SWITCHES, 10A @ 120VAC (MANUAL LITERATURE REQUIRED)											
25	72773	VALVE CHECK DBL DISC 4.0NPT	Cu				1.0000	ea		WH		N	
		Item Text: VALVE CHECK DOUBLE DISC 4" NPT, BRASS BODY, BRASS INTERNALS, 150 PSIG, MALE THREADED ENDS, TECHNO STYLE 5002-BR (MANUAL LITERATURE REQUIRED)											
26	72274	VALVE CHECK DBL DISC 3.0NPT	Cu				2.0000	ea		WH		N	
		Item Text: VALVE CHECK DOUBLE DISC 3" NPT, BRS BODY BRS INTERNALS 150PSIG MALE THREADED ENDS, TECHNO STYLE 5002-BR (INSTRUCTION MANUALS REQUIRED)											
28	72535	COUPLING VIC 4.0 GALV	St				1.0000	ea		VMW		N	
		Item Text: COUPLING VICTAULIC, 4" GALVANIZED, WITH GRADE E SYNTHETIC GASKET AND GALVANIZED HARDWARE- VICTAULIC # STYLE 77											
29	72397	COUPLING VIC 3.0 GALV	Cu				1.0000	ea		WH		N	
		Item Text: VICTAULIC COUPLING, 3" GALVANIZED, WITH GRADE E SYNTHETIC GASKET AND GALVANIZED HARDWARE- VICTAULIC # STYLE 77											
30	77556	U-BOLT 1 1/2P 3/8Dx2 5/8 304	Cu				4.0000	ea		WH		N	
		Item Text: Type 304 stainless steel U-bolt for 1 1/2" pipe, 3/8" diameter, 2 5/8" inside length, 1 1/4" thread length, 2" inside width. Fastenal No. 74637											

> Purchased item has BOM

31	254120812	U-BOLT 3P 1/2Dx5 304	St					2.0000	ea	VMW	N

Item Text

Type 304 stainless steel U-bolt for 3" pipe,
1/2" diameter, 5" inside length, 1 1/2" thread length,
3 1/2" inside width.

Fastenal 74644

32	254120816	U-BOLT 4P 1/2Dx6 304	St					8.0000	ea	VMW	N

Item Text

Type 304 stainless steel U-bolt for 4" pipe,
1/2" diameter, 6" inside length, 1 1/2" thread length,
4 1/2" inside width.

Fastenal 74645

33	1000164	STRAINER GSC 640 3/4" NPT	St					20.0000	ea	WH	N

Item Text

64 GSC STRAINER, 6 SEGMENTS, 0.040 SLOT, 3/4" NPT

Media retaining strainer shall consist of a lid, six segments spaced 0.040" and a 3/4" NPT base, each molded Cycolac GSM 1000F natural color food grade ABS plastic, using US Filter pattern drawings. Strainer shall be assembled with four # 6-32 slotted round head type 18-8 stainless steel machine screws, plain washers and FDA Buna-N O-rings.

34	77561	ADAPTER FLG 10.0 STL	Cu					1.0000	ea	WH	N

Item Text

ADAPTER FLANGE 10" STEEL STYLE 128

Manufacturer: Dresser
Mfr Part No.: 0128-1856-002
Description : Style 128 flange adapter for steel pipes
Size : 10 inch (for pipe OD=10.75 inch)
Material : Steel
Notes : with AWWA Class D Flange

35	A0001262E	TEE 125# FLG 10.0 CI	Cu					1.0000	ea	WH	N

Item Text

Flanged Class 125 Cast Iron TEES, size 10" Made to ANSI STANDARD B16.1. Grinnell FIG. 811, STOCKHAM FIG. 431, Or Approved Equal with black coating and plain face flanges, faced and drilled to ANSI Dimensions.

36	237151140	FLANGE SCH80 THD 4.0 PVC	St					1.0000	ea	WH	N

Item Text

Threaded Flange (FPT),
nominal size 4",
SCH 80 PVC,
One piece (solid)

37	A0001293E	FLANGE VS SCH80 SOC 10.0 PVC	Cu					2.0000	ea	WH	N

> Purchased item has BOM

Project : 310036 NASA JPL, Pasadena, CA I/C TM-350A w/tritons Status : Active
BOM Pos.: 0 - 9999 Start Date: 03-09-04
Customer: I00210 USF/Envirex End Dt :

Manufactured Item: 3100364021 SHOP ASSY TM-350A UNIT#1 BOM Unit: 1 ea

SEE DRAWING 3100364021

Pos.	Item Code	Description	Item Type	Length in]	Width [in]	No.of Units	Net Quantity	Un.	Scrap [%]	Wrh	Opr.	Ph.	Extra Info
38	A0001293C	FLANGE VS SCH80 SOC 6.0 PVC	Cu				7.0000	ea		WH		N	

Item Text
Flange, Van Stone, PVC 6" SCH 80 Socket.

Socket style Sch. 80 PVC 150 LB Van Stone Flange.
Design and tolerance conforming to ASTM D-2467.
CHEMTROL Fig 4551-A, ESLON Fig 009-VS or approved equal.
Bolt hole pattern shall meet ANSI B16.5

39	A0001293B	FLANGE VS SCH80 SOC 4.0 PVC	St				9.0000	ea		WH		N	

Item Text
Flange, VAN STONE, PVC 4" SCH 80 Socket.

Socket style Sch. 80 PVC 150 Van Stone Flange.
Design and tolerance conforming to ASTM D-2467.
Chemtrol Fig 4551-A, ESLON Fig 809-VS or approved equal.
Bolt hole pattern shall meet ANSI B16.5

41	77565	FLANGE SCH80 SOC 3.0 CPVC	St				3.0000	ea		VMW		N	
42	110460	FLANGE SCH80 THD VS 3.0 CPVC	St				1.0000	ea		WH		N	
43	A0001286K	TEE SCH80 SOC 6.0 PVC	Cu				1.0000	ea		WH		N	

Item Text
Socket tee, 6" Sch 80 PVC.

44	A0001283J	ELL 90DEG SCH80 SOC 4.0 PVC	St				3.0000	ea		WH		N	
45	72794	ELL 90DEG SCH80 THD 4.0 PVC	St				1.0000	ea		WH		N	

Item Text
ELL 90 DEG, SCH 80, 4" THREADED, PVC

46	77571	ELL 90DEG SCH80 THD 3.0 CPVC	Cu				1.0000	ea		WH		N	
47	72783	ELL 90DEG SCH80 THD 2.0 CPVC	St				2.0000	ea		VMW		N	
48	A0001286J	TEE SCH80 SOC 4.0 PVC	St				2.0000	ea		WH		N	

> Purchased item has BOM

Project : 310036 NASA JPL, Pasadena, CA
BOM Pos.: 0 - 9999
Customer: I00210 USF/Envirex

I/C TM-350A w/tritons

Status : Active
Start Date: 03-09-04
End Dt :

Pos.	Item Code	Description	Item Type	Length in]	Width [in]	No.of Units	Net Quantity	Un.	Scrap [%]	Wrh	Opr.	Ph.	Extra Info
Manufactured Item:	**3100364021**	**SHOP ASSY TM-350A UNIT#1**										**BOM Unit:**	**1 ea**

SEE DRAWING 3100364021

Item Text
Socket tee, 4" Sch 80 PVC.

49	6013030	TEE SCH80 SOC 3.0 CPVC	St				1.0000	ea		WH		N	

Item Text
TEE SCH.80 SOCKET 3.0 CPVC

Manufacturer: ESLON
Mfr Part No : 5027
Exp descr: SCHEDULE 80, GLUE SOCKET, S X S X S
Size: 3 IN.
Material: CPVC
Addl.Info: NOTES:
1. CPVC PARTS TO CONFORM TO ASTM F439.
2. PARTS TO BE NSF LISTED.

50	77569	TEE SCH80 THD 3.0 CPVC	Cu				2.0000	ea		WH		N	
51	A0001289D	BUSH SCH80 SxS 6.0x4.0 PVC	Cu				5.0000	ea		WH		N	

Item Text
Flush reducer bushing, 6" x 4", Sch. 80, socket, PVC.

52	A0001289A	BUSH SCH80 SxS 4.0x3.0 PVC	St				1.0000	ea		VMW		N	

Item Text
FLUSH REDUCER BUSHING 4" x 3", SCH. 80, SOCKET, PVC.
CHEMTROL 4518 or ESLON 814 or EQUAL

53	6122338	BUSH SCH80 SxS 3.0x2.0 PVC	St				1.0000	ea		VMW		N	

Item Text
REDUCER SOCKET x SOCKET 3 x 2 PVC

MANUFACTURER: ESLON
MANUFACTURER'S PART NO.: 8225
SCHEDULE 80, GLUE SOCKET
3 INCH X 2 INCH
PVC

EQUIVALENT ALTERNATIVES MAY BE SUBSTITUTED ON
APPROVAL FROM MEMCOR ENGINEERING.
APPROVED ALTERNATIVE: SPEARS 837-338

> Purchased item has BOM

Project : 310036 NASA JPL, Pasadena, CA I/C TM-350A w/tritons Status : Active
BOM Pos.: 0 - 9999 Start Date: 03-09-04
Customer: I00210 USF/Envirex End Dt :

Manufactured Item: 3100364021 SHOP ASSY TM-350A UNIT#1 BOM Unit: 1 ea

SEE DRAWING 3100364021

Pos.	Item Code	Description	Item Type	Length in]	Width [in]	No.of Units	Net Quantity	Un.	Scrap [%]	Wrh	Opr.	Ph.	Extra Info
54	87937	PLUG SCH40 SOCKET 4.0 PVC	St				1.0000	ea		VMW		N	
55	851850030	PLUG SCH80 THD 3.0 CPVC	St				2.0000	ea		WH		N	

Item Text
Plug, 3" MPT Sch. 80 CPVC, Universal Number 850-030C.

Thread Length - 2 3/8"
Hex dimension - 4"
Overall Length - 2 11/16"

56	77582	PLUG 150LB THD 2.0 BRS	St				1.0000	ea		WH		N	
57	157408020	PIPE PVC 10.0 SCH80x20FT	St	30.00		1	0.1250	s20	15	MR		N	
58	157248020	PIPE PVC 6.0 SCH80x20FT	St	40.00		1	0.1667	s20	15	MR		N	
59	157168020	PIPE PVC 4.0 SCH80x20FT	St	250.00		1	1.0417	s20	15	MR		N	

Item Text
PIPE PVC 4" SCH 80 X 20 FEET,
IDENTIFYING MARKING NOT ALLOWED ON PIPE
MATERIAL CERTIFICATION REQUIRED

60	158128020	PIPE CPVC 3.0 SCH80x20FT	St	150.00		1	0.6250	s20	15	MR		N	
61	158088020	PIPE CPVC 2.0 SCH80x20FT	St	24.00			0.1000	s20	15	MR		N	
62	205242404	ELL 90DEG STDWT ST 0.25 BRS	St				1.0000	ea		WH		N	
63	A0001293A	FLANGE VS SCH80 SOC 3.0 PVC	St				1.0000	ea		WH		N	

Item Text
Flange, Van Stone, PVC 3" SCH 80 Socket.

64	205340604	CNCTR POLYFL 0.375Tx0.25M BRS	St				1.0000	ea		VMW		N	

Item Text
CONNECTOR MALE 0.375T x 0.25M BRS

Manufacturer: I-E
Mfr part no.: 268-P-06x04
Description : Male connector for Polyfow Tubing
Size : 3/8" tube X 1/4" MPT
Material : Brass

65	72853	T RND PE 0.25IDx0.375OD	St	360.00			30.0000	ft		VMW		N	

Item Text
T RND PE 0.25 ID x 0.375 OD

Maufacturer:

> Purchased item has BOM

Project : 310036 NASA JPL, Pasadena, CA
BOM Pos.: 0 - 9999
Customer: I00210 USF/Envirex

I/C TM-350A w/tritons

Status : Active
Start Date: 03-09-04
End Dt :

Manufactured Item: 3100364021 **SHOP ASSY TM-350A UNIT#1** **BOM Unit: 1 ea**

Pos.	Item Code	Description	Item Type	Length in]	Width [in]	No.of Units	Net Quantity	Un.	Scrap [%]	Wrh	Opr.	Ph.	Extra Info
		Exp Descr : ROUND TUBING Material : Linear Low Density Polyethylene - FDA approved Size : 1/4" ID X 3/8" OD, 100ft roll. Addl Info : 2800psi @ -103 to +120 DEG F Alternate : McMASTER CARR 5181K25											
66	167040450	T POLYF 0.25ODx0.04x50FT	St	360.00			30.0000	ft		WH		N	
		Item Text T POLYF 0.25 OD x 0.04 x 50ft Manufacturer: Imperial Eastman Mfr Part No : 44-P-N Exp Descr : Natural Poly Flow tubing Size : 1/4" OD (in a 50' roll)											
67	205240404	VALVE NDL 0.25FPTx0.25MPT BRS	St				4.0000	ea		WH		N	
		Item Text NEEDLE VALVE 1/4" NPT, BRASS, 100 Pounds working pressure or less. MALE X FEMALE-HOLYOKE # 226 OR COUPLINGS CO. 108KC.											
69	1000961	FLOWMETER 125-500GPM 4.0PS	St				1.0000	ea		WH		N	
		Item Text VARIABLE AREA FLOWMETER, 125-500 GPM, 4.0PS, SADDLE MOUNTING, FOR 4" SCH40 PVC PIPE (SCH 80 READINGS 12% HIGHER THAN ACTUAL) BLUE WHITE INDUSTRIES MODEL # F-30400P (MANUAL LITERATURE REQUIRED)											
70	248010100	GASKET FLG FULL FACE 10.0 NEO	St				2.0000	ea		VMW		N	
		Item Text Full face flange gasket, size 10", 1/8" black neoprene, 50/60 durometer.											

> Purchased item has BOM

Project : 310036 NASA JPL, Pasadena, CA I/C TM-350A w/tritons Status : Active
BOM Pos.: 0 - 9999 Start Date: 03-09-04
Customer: I00210 USF/Envirex End Dt :

Manufactured Item: 3100364021 SHOP ASSY TM-350A UNIT#1 BOM Unit: 1 ea

SEE DRAWING 3100364021

Pos.	Item Code	Description	Item Type	Length in]	Width [in]	No.of Units	Net Quantity	Un.	Scrap [%]	Wrh	Opr.	Ph.	Extra Info
71	248010060	GASKET FLG FULL FACE 6.0 NEO	St				2.0000	ea		VMW		N	

Item Text
GASKET FLG FULL FACE 6.0 NEO

Description: FULL FACE flange gasket, 1/8" black neoprene 50/60 durometer.
Size: 6 in.

72	248010040	GASKET FLG FULL FACE 4.0 NEO	St				2.0000	ea		VMW		N	
73	248010030	GASKET FLG FULL FACE 3.0 NEO	St				1.0000	ea		VMW		N	
74	72826	PIPE TOE 304 SCH40 1.0x42.0	Cu				1.0000	ea		WH		N	
75	72249	SWITCH FLOAT 10AMP PIPE MOUNT	St				1.0000	ea		WH		N	

Item Text
SWITCH FLOAT 10AMP PIPE MOUNT,
N.O. CONTACTS W/20FT CABLE
SERIES 2900, ANCHOR SCIENTIFIC # P20-NO
(INSTRUCTION MANUALS REQUIRED)

76	250210010	WASHER LOCK 5/8 CS	St				64.0000	ea		VMW		N	
77	250101426	BOLT HH 7/8-9x6 1/2 CS	St				12.0000	ea		VMW		N	
78	250101420	BOLT HH 7/8-9x5 CS	St				24.0000	ea		VMW		N	
79	250101224	BOLT HH 3/4-10x6 CS	St				16.0000	ea		VMW		N	
80	250101216	BOLT HH 3/4-10x4 CS	St				8.0000	ea		WH		N	
81	250101022	BOLT HH 5/8-11x5 1/2 CS	St				40.0000	ea		VMW		N	
82	250101014	BOLT HH 5/8-11x3 1/2 CS	St				24.0000	ea		VMW		N	
83	250210014	WASHER LOCK 7/8 CS	St				36.0000	ea		VMW		N	
84	250150012	NUT HH 3/4-10 CS	St				24.0000	ea		VMW		N	
85	250150010	NUT HH 5/8-11 CS	St				64.0000	ea		VMW		N	
86	250150014	NUT HH 7/8-9 CS	St				36.0000	ea		VMW		N	
87	250200006	WASHER FLAT 3/8 CS	St				76.0000	ea		VMW		N	
88	250200010	WASHER FL 5/8 CS	St				128.0000	ea		VMW		N	
89	250200008	WASHER FLAT 1/2 CS	St				36.0000	ea		VMW		N	
90	254200006	WASHER FLAT 3/8 SS	St				16.0000	ea		VMW		N	
91	254200012	WASHER FLAT 3/4 SS	St				24.0000	ea		VMW		N	
92	89364	TRANSDUCER LEVEL MILLTRONICS	Cu				1.0000	ea		WH		N	

Item Text
TRANSDUCER LEVEL MILLTRONICS,
(TWO WIRE VERSION)
TWO WIRE-12 TO 28VDC POWER
4-20mA OUTPUT-ADJUSTABLE DAMPING

> Purchased item has BOM

Project : 310036 NASA JPL, Pasadena, CA I/C TM-350A w/tritons
BOM Pos.: 0 - 9999
Customer: I00210 USF/Envirex

Status : Active
Start Date: 03-09-04
End Dt :

Manufactured Item: 3100364021 SHOP ASSY TM-350A UNIT#1 BOM Unit: 1 ea

2" NPT THREADED NOSE-NEMA 4 CONSTRUCTION
0.8' TO 16.4' RANGE
MILLTRONICS "THE PROBE" PART NUMBER 7ML 1201-1EF00
OLD PART NUMBER 86152010
(INSTRUCTION MANUALS REQUIRED)

**note 6/28/02, 1EC00 is same, but has multi-language
manual rather than English version. TT **
** 9/30, 1EC00 has been changed to 1F00 per Milltronics.

Pos.	Item Code	Description	Item Type	Length in]	Width [in]	No.of Units	Net Quantity	Un.	Scrap [%]	Wrh	Opr.	Ph.	Extra Info
94	205350404	ELL POLYFLO 0.25Tx0.25MPT BRS	St				3.0000	ea		VMW		N	
95	A0001291K	CAP SCH80 SOC 6.0 PVC	Cu				1.0000	ea		WH		N	

Item Text
CAP, PIPE, PVC 6" Sch 80 Socket.

97	K9S-10-1	LATERAL INFLUENT #1 TM-350A	Cu				1.0000	ea		WH		N	
98	77611	ADAPTER SCH80 F 3.0 CPVC	Cu				1.0000	ea		WH		N	
99	250100606	BOLT HH 3/8-16x1 1/2 CS	St				8.0000	ea		VMW		N	
100	254210006	WASHER LOCK 3/8 SS	St				8.0000	ea		VMW		N	
101	250150006	NUT HH 3/8-16 CS	St				2.0000	ea		VMW		N	
102	K9S-18	BRACKET SUPRT AIR PIPE TM-350A	Cu				1.0000	ea		WH		N	
103	250100810	BOLT HH 1/2-13x2 1/2 CS	St				8.0000	ea		VMW		N	
104	254210008	WASHER LOCK 1/2 SS	St				10.0000	ea		VMW		N	
105	250150008	NUT HH 1/2-13 CS	St				12.0000	ea		VMW		N	
106	250100808	BOLT HH 1/2-13x2 CS	St				4.0000	ea		VMW		N	
107	250100608	BOLT HH 3/8-16x2 CS	St				14.0000	ea		VMW		N	
109	250210012	WASHER LOCK 3/4 CS	St				24.0000	ea		VMW		N	
110	254200008	WASHER FLAT 1/2 SS	St				20.0000	ea		VMW		N	
111	250200014	WASHER FL 7/8 CS	St				72.0000	ea		VMW		N	
112	1000270	WELDSTUD FUL THD 3/8-16x1.5 SS	St				12.0000	ea		WH		N	

Item Text
WELDSTUD, FULL THREADED, ARC STUD,
3/8"-16NC X 1-1/2", STAINLESS STEEL,
NORTHLAND # ARC SS FT 008 10

114	250200012	WASHER FL 3/4 CS	St				48.0000	ea		VMW		N	
115	250210006	WASHER LOCK 3/8 CS	St				50.0000	ea		VMW		N	
116	73400	L 304 3.0x3.0x0.25x71.0	Cu				4.0000	ea		WH		N	
117	250210008	WASHER LOCK 1/2 CS	St				26.0000	ea		VMW		N	
118	1000274	PLUG PIPE 0.25NPT SS	St				2.0000	ea		WH		N	
119	200030004	COUPLING STDWT 0.25 STL	St				3.0000	ea		WH		N	

> Purchased item has BOM

Project : 310036 NASA JPL, Pasadena, CA
BOM Pos.: 0 - 9999
Customer: I00210 USF/Envirex

I/C TM-350A w/tritons

Status : Active
Start Date: 03-09-04
End Dt :

Pos.	Item Code	Description	Item Type	Length in]	Width [in]	No.of Units	Net Quantity	Un.	Scrap [%]	Wrh	Opr.	Ph.	Extra Info
Manufactured Item:	**3100364021**	**SHOP ASSY TM-350A UNIT#1**											**BOM Unit: 1 ea**
	SEE DRAWING 3100364021												
120	205070414	NIP 0.25x0.875 BRS CLOSE	St				3.0000	ea		WH		N	
	Item Text: NIPPLE, 1/4" X 7/8" BRASS												
121	72466	ROD THD 3/4-10x6 IN SS	St				12.0000	ea		VMW		N	
	Item Text: Threaded rod, 3/4"-10NC X 6" long, 18-8 SS, with chamfered ends												
122	254150012	NUT HH 3/4-10 SS	St				36.0000	ea		VMW		N	
124	110448	ELL 90DEG SCH80 SOC 3.0 CPVC	Cu				1.0000	ea		WH		N	
125	254100405	BOLT HH 1/4-20x1 1/4 SS	St				1.0000	ea		VMW		N	
126	254210004	WASHER LOCK 1/4 SS	St				1.0000	ea		VMW		N	
127	254200004	WASHER FLAT 1/4 SS	St				1.0000	ea		VMW		N	
129	3100364104	VALVE SAFETY 2.0 NPT	Cu				1.0000	ea		2		N	
	Item Text: SAFETY VALVE 1.0 - 8.5PSI OP PRESS, 2" FPZ # VRL6												
130	72220	TEE SCH80 THD 2.0 CPVC	St				1.0000	ea		VMW		N	
	Item Text: TEE, 2" THREADED C-PVC, R-H No. 3605.020												
136	107569	ADAPTER SCH80 M 3.0 CPVC	Cu				2.0000	ea		WH		N	
137	3100364105	FILTER INLET 2.0NPT	Cu				1.0000	ea		2		N	
	Item Text: INLET FILTER, 2" POLYESTER->99% REMOVAL TO 5 MICRON, SILENCING NPT CONNECTION DESIGN, FPZ# FS 231P 200												
139	3100368032	PANEL ASMY POWER TM-350A 480V	Cu				1.0000	ea		WH		N	
	Item Text: SEE DRAWING 3100368032												
140	K9A-9	TM-350A CONDUIT ASMY - #1	Cu				1.0000	ea		WH		N	
141	L0A-32A	SWITCH ASSY HEADLOSS	St				1.0000	ea		WH		N	

> Purchased item has BOM

Project : 310036 NASA JPL, Pasadena, CA I/C TM-350A w/tritons Status : Active
BOM Pos.: 0 - 9999 Start Date: 03-09-04
Customer: I00210 USF/Envirex End Dt :

Manufactured Item: 3100364021 SHOP ASSY TM-350A UNIT#1 BOM Unit: 1 ea

SEE DRAWING 3100364021

Pos.	Item Code	Description	Item Type	Length in]	Width [in]	No.of Units	Net Quantity	Un.	Scrap [%]	Wrh	Opr.	Ph.	Extra Info
142	L0A-33A	SWITCH ASSY PRESS CLARIFIER	St				1.0000	ea		WH		N	
143	L0A-35	SWITCH ASSY BLOWER PRESS	St				1.0000	ea		WH		N	
144	3100364016	TURBIDIMETER ASSY MASTER HACH	Cu				1.0000	ea		WH		N	

Item Text
HACH 1720E MASTER EFFLUENT TURBIDIMETER ASSEMBLY
INCLUDES TURBIDIMETER WITH SC100 CONTROLLER
ASSEMBLED PER DRAWING # 3100364016

145	3100364106	NIP SCH80 2.0x7.0 CPVC	Cu				4.0000	ea		VMW		N	
146	72295	NIP SCH80 2.0x2.5 CPVC	St				2.0000	ea		VMW		N	
147	3100364107	ELL 90DEG SCH80 SxT 2.0 CPVC	Cu				1.0000	ea		WH		N	
148	3100364108	COUPLING SCH80 THD 2.0 CPVC	Cu				1.0000	ea		WH		N	
149	3100364054	SHIELD SUN	Cu				1.0000	ea		WH		Y	

Item Text
SEE DRAWING 3100364054

150	3100364055	SHIELD SUN	Cu				1.0000	ea		WH		Y	

Item Text
SEE DRAWING 3100364055

151	1000271	WELDSTUD FUL THD 3/8-16x1.0 SS	St				16.0000	ea		WH		N	

Item Text
WELDSTUD, FULL THREADED, ARC STUD,
3/8"-16NC X 1", STAINLESS STEEL,
NORTHLAND # ARC SS FT 008 06

152	3100364057	TUBE STILLING	Cu				1.0000	ea		WH		Y	

> Purchased item has BOM

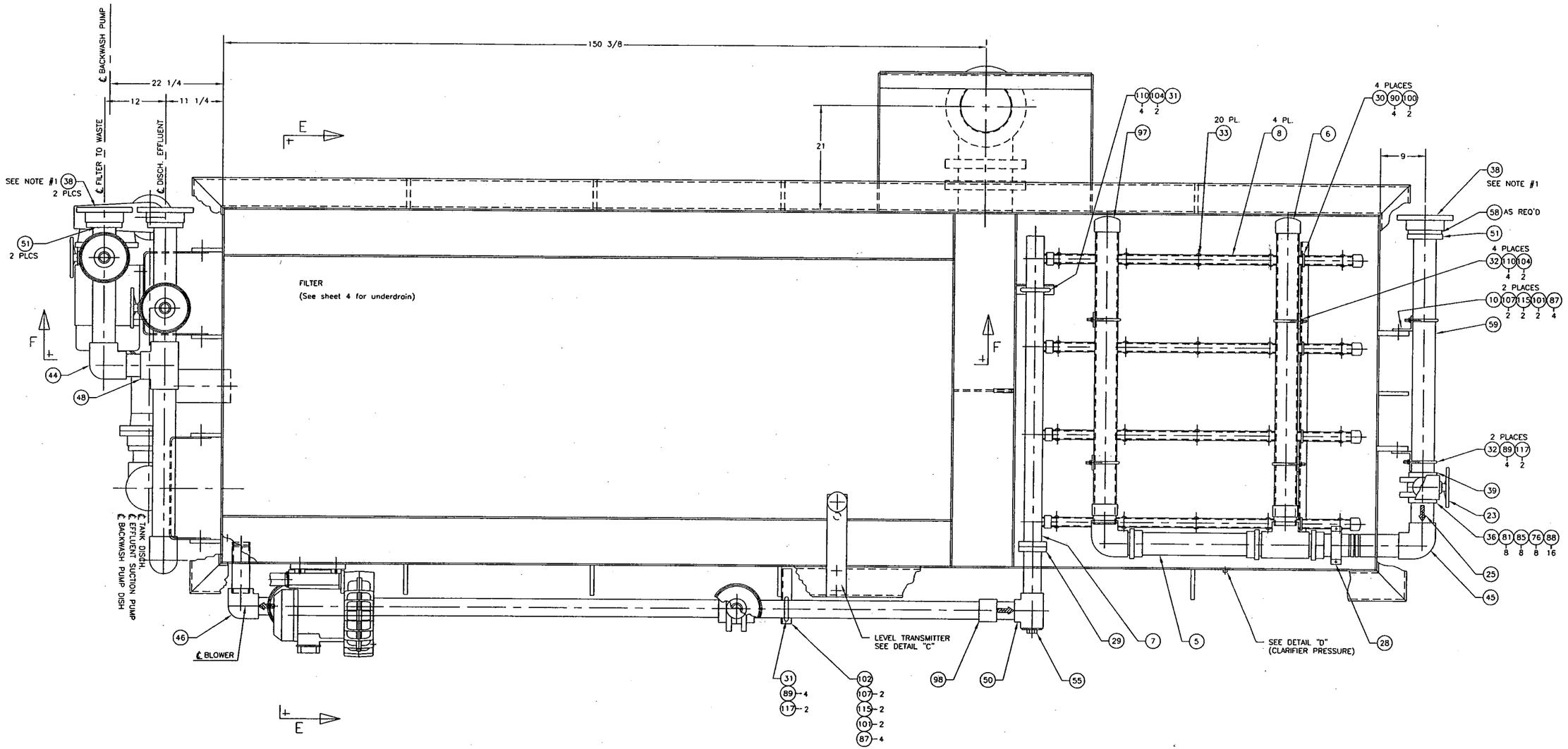

PLAN VIEW

NOTES:

1. ALL FLANGES FACES ARE TO BE FLUSH WITH OUTSIDE OF TANK WALL
2. SHOP CONDUIT ASSEMBLY 140

REV	DESCRIPTION	DATE	DWN	CHKD	APVD	ECN
2	REMOVED INFLUENT POSITIONING VALVE AND WASTE PIPE	04/29/04	SJT	–	–	–
	SPOOL, ADDED BACKWASH PUMP DISCHARGE GAUGE					

COMPANY CONFIDENTIAL
THIS DOCUMENT AND ALL INFORMATION CONTAINED HEREIN ARE THE PROPERTY OF THE USFILTER AND/OR ITS AFFILIATES ("USF"). THE DESIGN CONCEPTS AND INFORMATION CONTAINED HEREIN ARE PROPRIETARY TO USF AND ARE SUBMITTED IN CONFIDENCE. THEY ARE NOT TRANSFERABLE AND MUST BE USED ONLY FOR THE PURPOSE FOR WHICH THE DOCUMENT IS EXPRESSLY LOANED. THEY MUST NOT BE DISCLOSED, REPRODUCED, LOANED OR USED IN ANY OTHER MANNER WITHOUT THE EXPRESS WRITTEN CONSENT OF USF. IN NO EVENT SHALL THEY BE USED IN ANY MANNER DETRIMENTAL TO THE INTEREST OF USF. ALL PATENT RIGHTS ARE RESERVED. UPON THE DEMAND OF USF, THIS DOCUMENT, ALONG WITH ALL COPIES AND EXTRACTS, AND ALL RELATED NOTES AND ANALYSES, MUST BE RETURNED TO USF OR DESTROYED, AS INSTRUCTED BY USF. ACCEPTANCE OF THE DELIVERY OF THIS DOCUMENT CONSTITUTES AGREEMENT TO THESE TERMS AND CONDITIONS.

DESIGNER	DATE
CHECKER	DATE
ENGINEER SJT	DATE 03/26/04
MANAGER	DATE –
FILE: K9A-4	
SCALE: NTS	

TITLE: TRI-MITE TM350A SHOP ASSEMBLY – UNIT #1

CLIENT: NASA JPL
PASADENA, CA

USFilter
441 MAIN STREET
STURBRIDGE, MA 01562
TEL: 1-800-636-2674

PROJECT	CODE	DRAWING	SHEET	REV
310036		3100364021	1 OF 5	2

BAR = 1" AT PLOT SCALE

INTL REF:

STD: 2-0600-11X17B

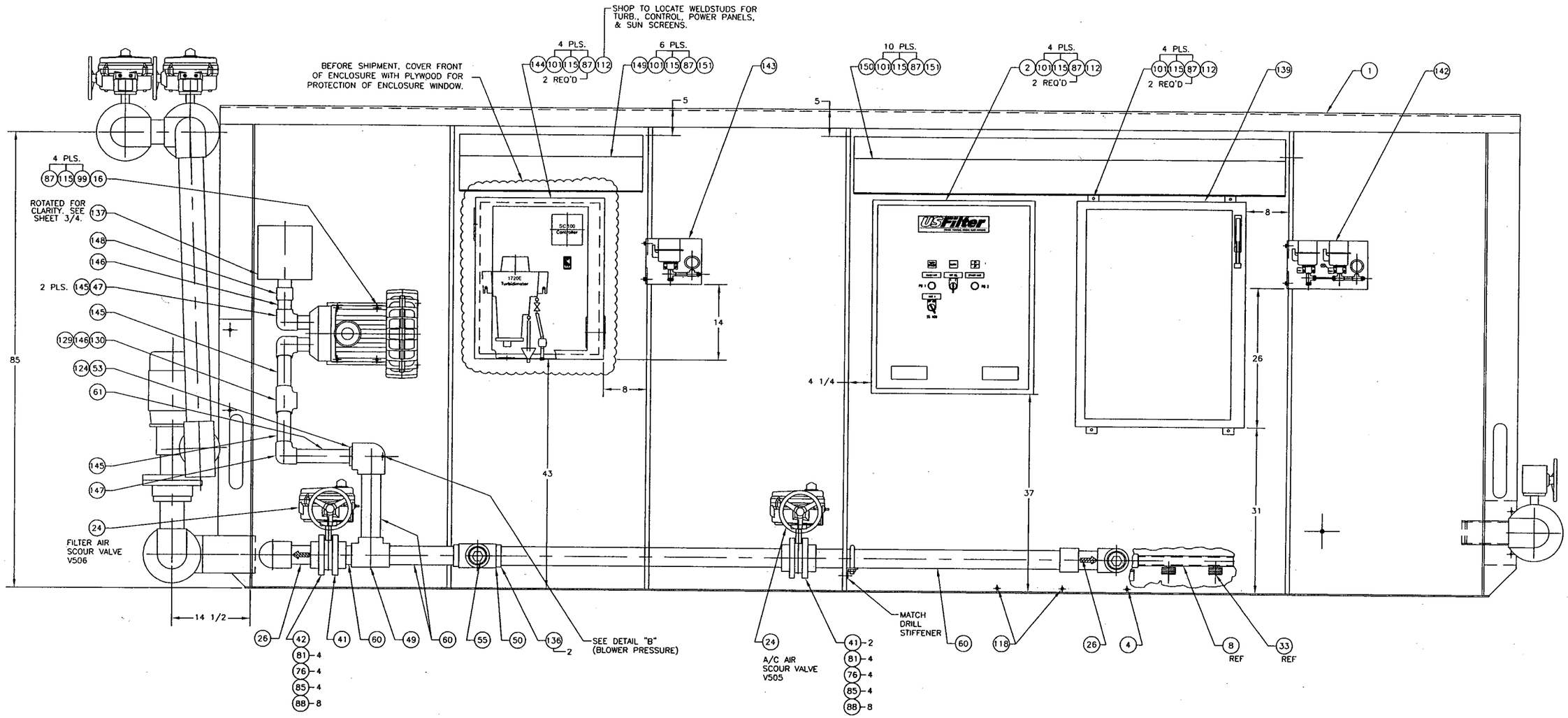

ELEVATION VIEW

REV	DESCRIPTION	DATE	DWN	CHKD	APVD	ECN
2	SEE SHEET 1	-	-	-	-	-

COMPANY CONFIDENTIAL
THIS DOCUMENT AND ALL INFORMATION CONTAINED HEREIN ARE THE PROPERTY OF THE USFILTER AND/OR ITS AFFILIATES ("USF"). THE DESIGN CONCEPTS AND INFORMATION CONTAINED HEREIN ARE PROPRIETARY TO USF AND ARE SUBMITTED IN CONFIDENCE. THEY ARE NOT TRANSFERABLE AND MUST BE USED ONLY FOR THE PURPOSE FOR WHICH THE DOCUMENT IS EXPRESSLY LOANED. THEY MUST NOT BE DISCLOSED, REPRODUCED, LOANED OR USED IN ANY OTHER MANNER WITHOUT THE EXPRESS WRITTEN CONSENT OF USF. IN NO EVENT SHALL THEY BE USED IN ANY MANNER DETRIMENTAL TO THE INTEREST OF USF. ALL PATENT RIGHTS ARE RESERVED. UPON THE DEMAND OF USF, THIS DOCUMENT, ALONG WITH ALL COPIES AND EXTRACTS, AND ALL RELATED NOTES AND ANALYSES, MUST BE RETURNED TO USF OR DESTROYED, AS INSTRUCTED BY USF. ACCEPTANCE OF THE DELIVERY OF THIS DOCUMENT CONSTITUTES AGREEMENT TO THESE TERMS AND CONDITIONS.

DESIGNER	DATE
CHECKER	DATE
ENGINEER SJT	DATE 03/26/04
MANAGER	DATE -
FILE: K9A-4	
SCALE: NTS	

TITLE TRI-MITE TM350A SHOP ASSEMBLY - UNIT #1

CLIENT NASA JPL
PASADENA, CA

USFilter
441 MAIN STREET
STURBRIDGE, MA 01562
TEL: 1-800-636-2674

PROJECT	CODE	DRAWING	SHEET	REV
310036		3100364021	2 OF 5	2

BAR = 1" AT PLOT SCALE

INTL. REF:

STD: 2-0600-11X17B

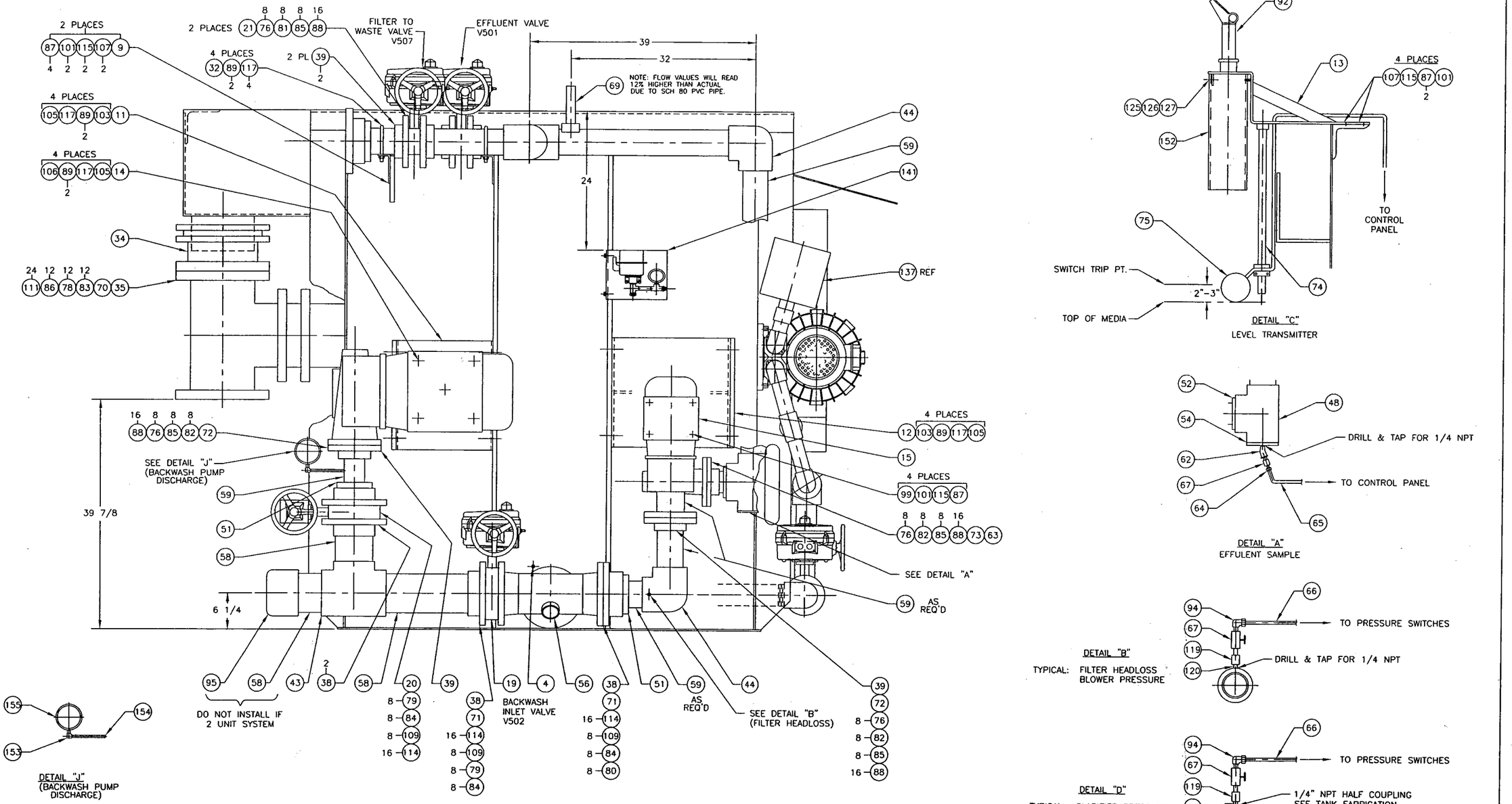

FILTER END ELEVATION

REV	DESCRIPTION	DATE	DWN	CHKD	APVD	ECN
2	SEE SHEET 1	-	-	-	-	-

COMPANY CONFIDENTIAL
THIS DOCUMENT AND ALL INFORMATION CONTAINED HEREIN ARE THE PROPERTY OF THE USFILTER AND/OR ITS AFFILIATES ("USF"). THE DESIGN CONCEPTS AND INFORMATION CONTAINED HEREIN ARE PROPRIETARY TO USF AND ARE SUBMITTED IN CONFIDENCE. THEY ARE NOT TRANSFERABLE AND MUST BE USED ONLY FOR THE PURPOSE FOR WHICH THE DOCUMENT IS EXPRESSLY LOANED. THEY MUST NOT BE DISCLOSED, REPRODUCED, LOANED OR USED IN ANY OTHER MANNER WITHOUT THE EXPRESS WRITTEN CONSENT OF USF. IN NO EVENT SHALL THEY BE USED IN ANY MANNER DETRIMENTAL TO THE INTEREST OF USF. ALL PATENT RIGHTS ARE RESERVED. UPON THE DEMAND OF USF, THIS DOCUMENT, ALONG WITH ALL COPIES AND EXTRACTS, AND ALL RELATED NOTES AND ANALYSES, MUST BE RETURNED TO USF OR DESTROYED, AS INSTRUCTED BY USF. ACCEPTANCE OF THE DELIVERY OF THIS DOCUMENT CONSTITUTES AGREEMENT TO THESE TERMS AND CONDITIONS.

DESIGNER	DATE
CHECKER	DATE
ENGINEER SJT	DATE 03/26/04
MANAGER	DATE -
FILE: K9A-4	
SCALE: NTS	

TITLE TRI-MITE TM350A SHOP ASSEMBLY - UNIT #1

CLIENT NASA JPL
PASADENA, CA

USFilter
441 MAIN STREET
STURBRIDGE, MA 01562
TEL: 1-800-636-2674

PROJECT	CODE	DRAWING	SHEET	REV
310036		3100364021	3 OF 5	2

BAR = 1" AT PLOT SCALE
INTL REF:
STD: 2-0600-11X17B

BAR = 1" AT PLOT SCALE

INTL REF:

STD: 2-0600-11X17B

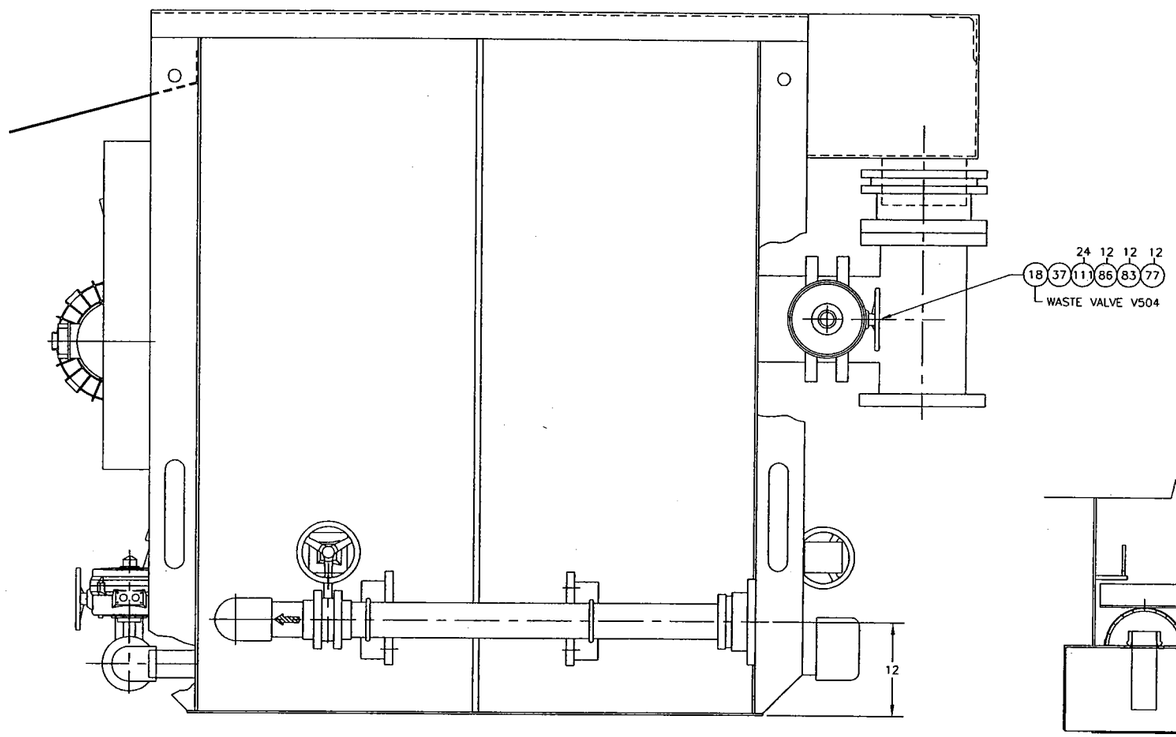

INFLUENT END ELEVATION

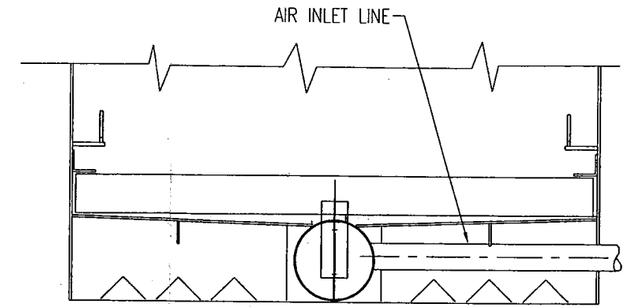

SECTION "E"-"E"

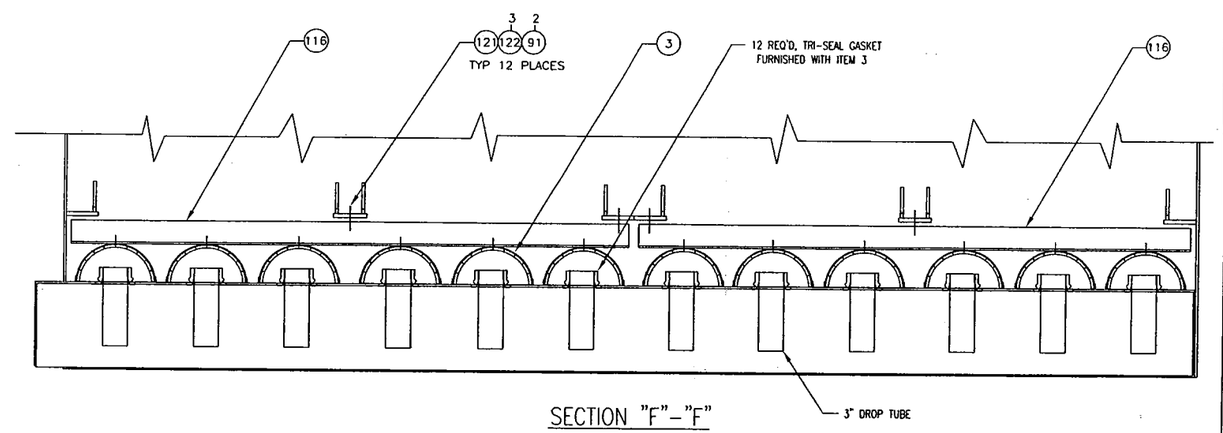

SECTION "F"-"F"

NOTES:

1. SEE TRI-SEAL/TRITON UNDERDRAIN INSTALLATION INSTRUCTIONS.

REV	DESCRIPTION	DATE	DWN	CHKD	APVD	ECN
2	SEE SHEET 1	-	-	-	-	-

COMPANY CONFIDENTIAL

THIS DOCUMENT AND ALL INFORMATION CONTAINED HEREIN ARE THE PROPERTY OF THE USFILTER AND/OR ITS AFFILIATES ("USF"). THE DESIGN CONCEPTS AND INFORMATION CONTAINED HEREIN ARE PROPRIETARY TO USF AND ARE SUBMITTED IN CONFIDENCE. THEY ARE NOT TRANSFERABLE AND MUST BE USED ONLY FOR THE PURPOSE FOR WHICH THE DOCUMENT IS EXPRESSLY LOANED. THEY MUST NOT BE DISCLOSED, REPRODUCED, LOANED OR USED IN ANY OTHER MANNER WITHOUT THE EXPRESS WRITTEN CONSENT OF USF. IN NO EVENT SHALL THEY BE USED IN ANY MANNER DETRIMENTAL TO THE INTEREST OF USF. ALL PATENT RIGHTS ARE RESERVED. UPON THE DEMAND OF USF, THIS DOCUMENT, ALONG WITH ALL COPIES AND EXTRACTS, AND ALL RELATED NOTES AND ANALYSES, MUST BE RETURNED TO USF OR DESTROYED, AS INSTRUCTED BY USF. ACCEPTANCE OF THE DELIVERY OF THIS DOCUMENT CONSTITUTES AGREEMENT TO THESE TERMS AND CONDITIONS.

DESIGNER	DATE
CHECKER	DATE
ENGINEER SJT	DATE 03/26/04
MANAGER	DATE -
FILE: K9A-4	
SCALE: NTS	

TITLE TRI-MITE TM350A SHOP ASSEMBLY - UNIT #1

CLIENT NASA JPL
PASADENA, CA

USFilter

441 MAIN STREET
STURBRIDGE, MA 01562
TEL: 1-800-636-2674

PROJECT	CODE	DRAWING	SHEET	REV
310036		3100364021	4 OF 5	2

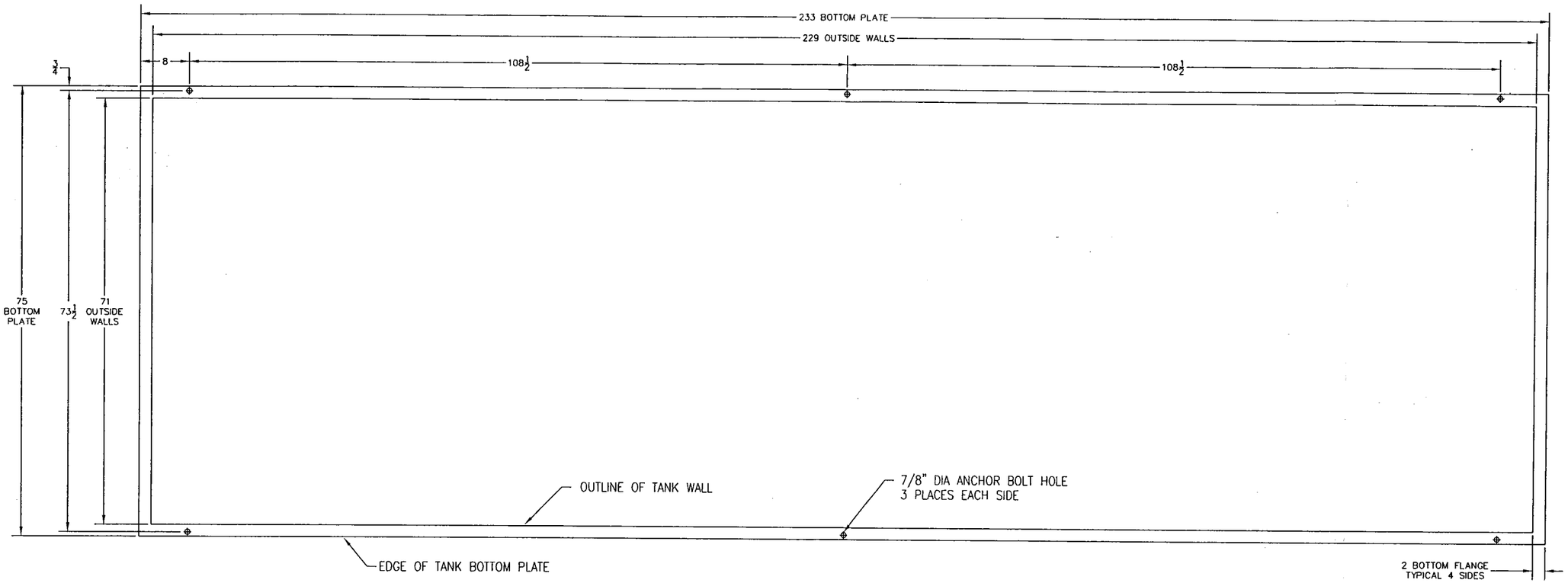

PLAN - ANCHOR BOLT HOLE LOCATION

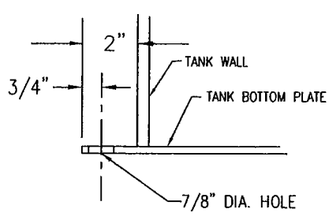

ANCHOR BOLT HOLE DETAIL
TYPICAL 6 PLACES

REV	DESCRIPTION	DATE	DWN	CHKD	APVD	ECN
2	SEE SHEET 1	-	-	-	-	-

COMPANY CONFIDENTIAL
THIS DOCUMENT AND ALL INFORMATION CONTAINED HEREIN ARE THE PROPERTY OF THE USFILTER AND/OR ITS AFFILIATES ("USF"). THE DESIGN CONCEPTS AND INFORMATION CONTAINED HEREIN ARE PROPRIETARY TO USF AND ARE SUBMITTED IN CONFIDENCE. THEY ARE NOT TRANSFERABLE AND MUST BE USED ONLY FOR THE PURPOSE FOR WHICH THE DOCUMENT IS EXPRESSLY LOANED. THEY MUST NOT BE DISCLOSED, REPRODUCED, LOANED OR USED IN ANY OTHER MANNER WITHOUT THE EXPRESS WRITTEN CONSENT OF USF. IN NO EVENT SHALL THEY BE USED IN ANY MANNER DETRIMENTAL TO THE INTEREST OF USF. ALL PATENT RIGHTS ARE RESERVED. UPON THE DEMAND OF USF, THIS DOCUMENT, ALONG WITH ALL COPIES AND EXTRACTS, AND ALL RELATED NOTES AND ANALYSES, MUST BE RETURNED TO USF OR DESTROYED, AS INSTRUCTED BY USF. ACCEPTANCE OF THE DELIVERY OF THIS DOCUMENT CONSTITUTES AGREEMENT TO THESE TERMS AND CONDITIONS.

DESIGNER	DATE
CHECKER	DATE
ENGINEER SJT	DATE 03/26/04
MANAGER	DATE -
FILE: K9A-4	
SCALE: NTS	

TITLE TRI-MITE TM350A SHOP ASSEMBLY - UNIT #1

CLIENT NASA JPL
PASADENA, CA

USFilter
USFILTER
STURBRIDGE, MA
(508) 347-7344

PROJECT	CODE	DRAWING	SHEET	REV
310036		3100364021	5 OF 5	2

BAR = 1" AT PLOT SCALE
INTL REF:
STD: 2-0600-11X17B

Pos.	Item Code	Description	Effect. Date	Expiry Date	Length [in]	Width [in]	No.of Units	Net Quantity	Un.	Scpf [%]	Wrh	Opr	Ph.	Extra Info
Manufactured Item	**: L0A-32A**	**SWITCH ASSY HEADLOSS**				**Item Owner:**					**BOM Unit:**			**1 ea**
2	C-3056-1	BRACKET MTG SW HEADL	04-18-01					1.0000	ea		WH		Y	
3	288010700	SWITCH VACUUM ASCO #	04-18-01					1.0000	ea		WH		N	

Item Text

SWITCH PRESS ASCO # PB21B

Manufacturer: ASCO
Mfr part no.: PB21B
Description : Vacuum Switch
Add'l Info. : Manual Literature Required.

4	288010701	GAUGE COMPOUND SPECI	04-18-01					1.0000	ea		WH		N	

Item Text

GAUGE COMPOUND SPECIAL RANGE

Ashcroft compound gauge special range, left vacuum 0-30 HG &
0-34 ft water, right pressure 0-15 psig & 0-34 ft water,
3.50 dial, 0.25 npt bottom connection, wall mount bracket
135B2411, Ashcroft # 35-1009AW-02L-XFWXLJ.
(Instruction Manuals Required).
35-1009AW-02L-XFW-30"/0/15 AND 34'H20 VAC/0/34'H20

5	250100604	BOLT HH 3/8-16x1 CS	04-18-01					2.0000	ea		VMW		N	
6	205090004	TEE STDWT THD 0.25 B	04-18-01					2.0000	ea		WH		N	
7	605020120	VALVE COIN 0.125 NPT	04-18-01					1.0000	ea		VMW		N	

Item Text

VALVE COIN, 0.125 NPT
DOLE # 9 OR CONBRACO # 2720202

8	205010402	BUSH STDWT 0.25x0.12	04-18-01					1.0000	ea		WH		N	

Item Text

Bushing, Brass std. wt. 1/4" x 1/8"

Manufacturer: PARKER
Mfr part no : 209P-4-2
Description : HEX HEAD PIPE THREAD REDUCER BUSHING
Size/Style : 1/4 MPT x 1/8 FPT
Material : BRASS

9	205340404	CNCTR POLYFL 0.25Tx0	04-18-01					1.0000	ea		VMW		N	

Item Text

CONNECTOR POLYFL 0.25T x 0.25M BRS

Manufacturer: Imperial Eastman
Mfr part no.: 268P-04 x 04,
Style : 1/4"TUBE x 1/4"MPT
Material : BRASS

10	205070414	NIP 0.25x0.875 BRS C	04-18-01					1.0000	ea		WH		N	

Manufactured Item : L0A-32A **SWITCH ASSY HEADLOSS** **Item Owner:** **BOM Unit: 1 ea**

Item Text
NIPPLE, 1/4" X 7/8" BRASS

Pos.	Item Code	Description	Effect. Date	Expiry Date	Length [in]	Width [in]	No.of Units	Net Quantity	Un.	Scpf [%]	Wrh	Opr	Ph.	Extra Info
11	I411112	ZZ-REPLACE WITH 7242	04-18-01					0.0000	bx		IA		N	2 screws
12	205070448	NIP 0.25x3.0 BRS	04-18-01					1.0000	ea		WH		N	
13	250150006	NUT HH 3/8-16 CS	04-18-01					2.0000	ea		VMW		N	
14	250210006	WASHER LOCK 3/8 CS	04-18-01					2.0000	ea		VMW		N	
15	250200006	WASHER FLAT 3/8 CS	04-18-01					4.0000	ea		VMW		N	
16	I451001	WASHER FL #10 SS	04-18-01					0.0000	bx		VMW		N	4 washer
17	I451000	WASHER LCK #10 SS	04-18-01					0.0000	bx		VMW		N	2 washer
18	I441010	NUT #10-24 SS	04-18-01					0.0000	bx		VMW		N	2 nuts
19	288010704	TRANSDUCER UNIT ASCO	04-18-01					1.0000	ea		WH		N	

Item Text
TRANSDUCER UNIT

Manufacturer: ASCO
Mfr Part No.: RV24A21
Add'l Info. : Manual Literature Required

20	288010706	BRACKET MTG ASCO #PP	04-18-01					1.0000	ea		WH		N	

Item Text
BRACKET MOUNTING

Manufacturer: ASCO
Mfr Part No.: PP03

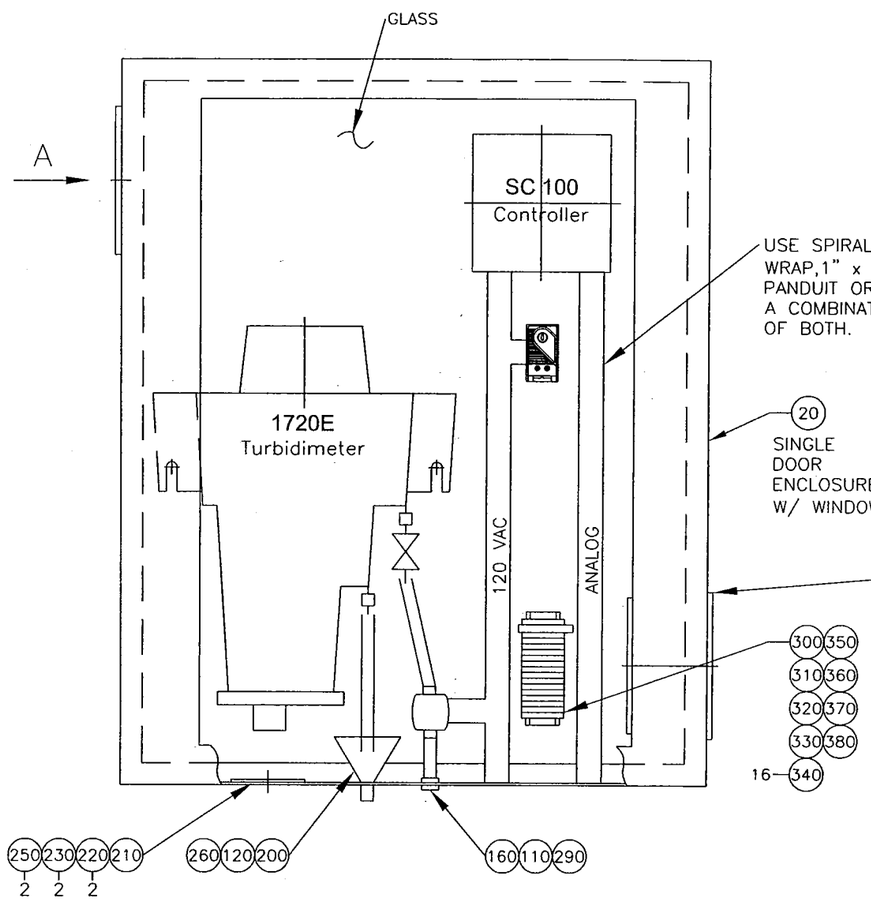

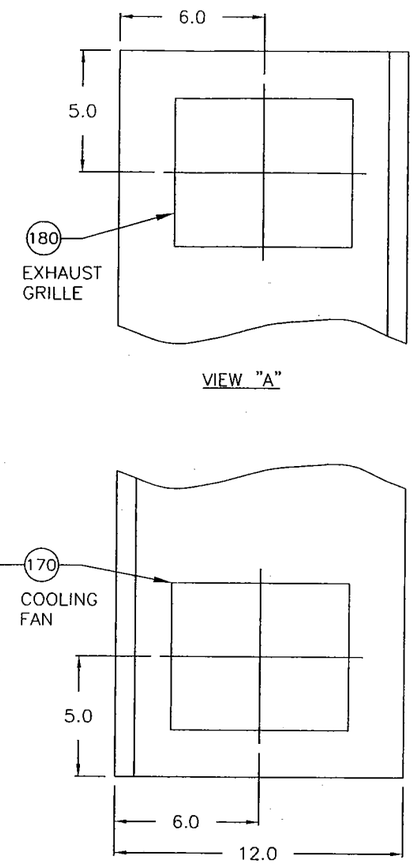

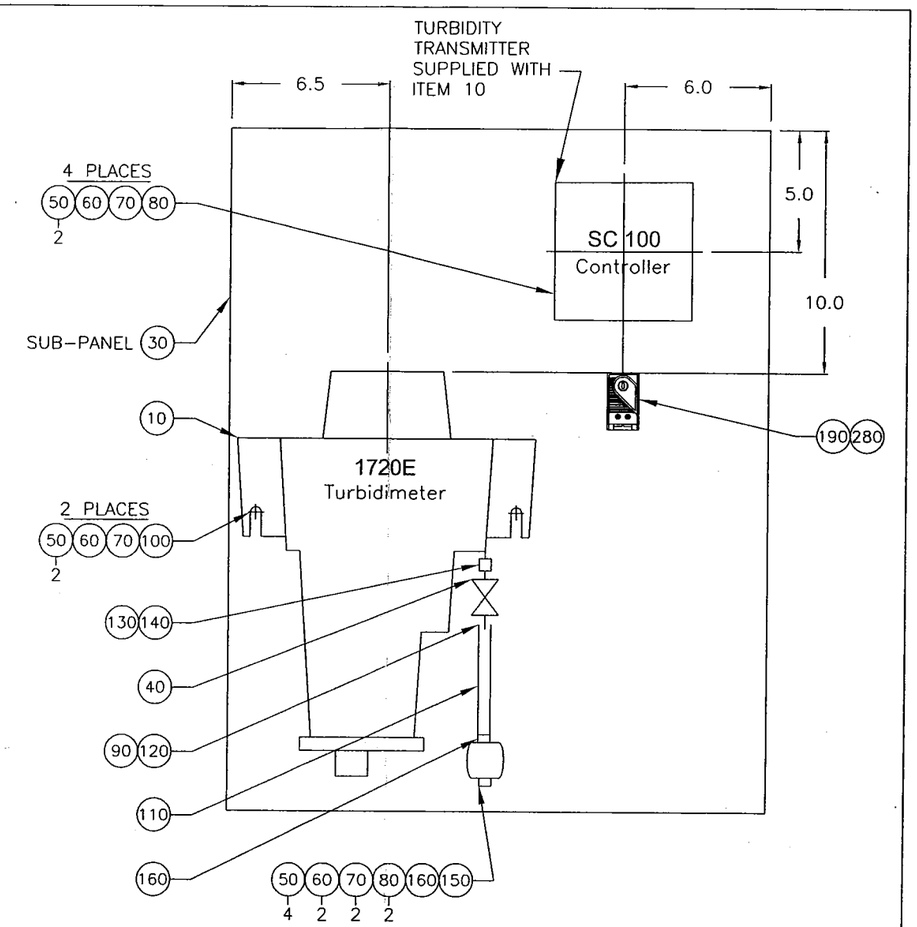

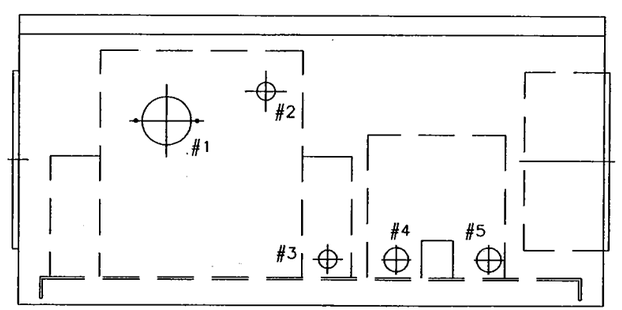

HOLES IN BOTTOM OF ENCLOSURE

1) MOUNT EQUIPMENT ON SUB-PANEL AND INSTALL IN ENCLOSURE.
2) LOCATE APPROXIMATE LOCATIONS FOR HOLES #1, #2, AND #3 ON THE BOTTOM OF THE ENCLOSURE.
3) HOLE #1 – ø2" CLEARANCE HOLE FOR ø1" TURBIDIMETER SERVICE DRAIN AND (2) ø0.156 HOLES ON ø2.5 B.C.
4) HOLE #2 – CLEARANCE HOLE FOR ITEM 200.
5) HOLE #3 – CLEARANCE HOLE FOR ITEM 290.
6) HOLE #4/#5 – CLEARANCE HOLES FOR CONDUIT.

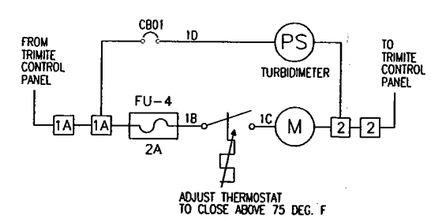

COOLING FAN POWER

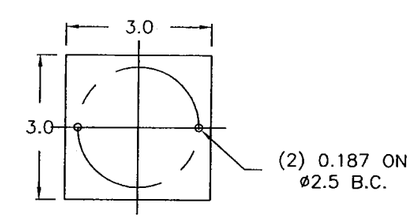

ITEM 210
3" STAINLESS STEEL COVER PLATE FOR SERVICE DRAIN HOLE.

APPLICABLE SPECIFICATIONS:

TAGGING -- EP-2

SEE SEPARATE BILL OF MATERIALS

REV	DESCRIPTION	DATE	DWN	CHKD	APVD	ECN
3	ADDED TURBIDIMETER POWER SUPPLY CIRCUIT BREAKER	05/25/04	SJT	–	–	–
2	REVISED DRAWINGS PER USF MEMCOR/ENVIROX/SHAW CONFERENCE	05/20/04	SJT	–	–	–

COMPANY CONFIDENTIAL
THIS DOCUMENT AND ALL INFORMATION CONTAINED HEREIN ARE THE PROPERTY OF THE USFILTER AND/OR ITS AFFILIATES ("USF"). THE DESIGN CONCEPTS AND INFORMATION CONTAINED HEREIN ARE PROPRIETARY TO USF AND ARE SUBMITTED IN CONFIDENCE. THEY ARE NOT TRANSFERABLE AND MUST BE USED ONLY FOR THE PURPOSE FOR WHICH THE DOCUMENT IS EXPRESSLY LOANED. THEY MUST NOT BE DISCLOSED, REPRODUCED, LOANED OR USED IN ANY OTHER MANNER WITHOUT THE EXPRESS WRITTEN CONSENT OF USF. IN NO EVENT SHALL THEY BE USED IN ANY MANNER DETRIMENTAL TO THE INTEREST OF USF. ALL PATENT RIGHTS ARE RESERVED. UPON THE DEMAND OF USF, THIS DOCUMENT, ALONG WITH ALL COPIES AND EXTRACTS, AND ALL RELATED NOTES AND ANALYSES, MUST BE RETURNED TO USF OR DESTROYED, AS INSTRUCTED BY USF. ACCEPTANCE OF THE DELIVERY OF THIS DOCUMENT CONSTITUTES AGREEMENT TO THESE TERMS AND CONDITIONS.

DESIGNER	DATE
CHECKER	DATE
ENGINEER SJT	DATE 04/05/04
MANAGER	DATE
FILE: AQA-57	
SCALE: NTS	

TITLE ASSEMBLY, MASTER EFFLUENT TURBIDIMETER

CLIENT NASA JPL
PASADENA, CA

USFilter
441 MAIN STREET
STURBRIDGE, MA 01562
TEL: 1-800-636-2674

PROJECT	CODE	DRAWING	SHEET	REV
310036		3100364016	1 OF 1	3

BAR = 1" AT PLOT SCALE
INTL REF:
STD: 2-0600-11X17B

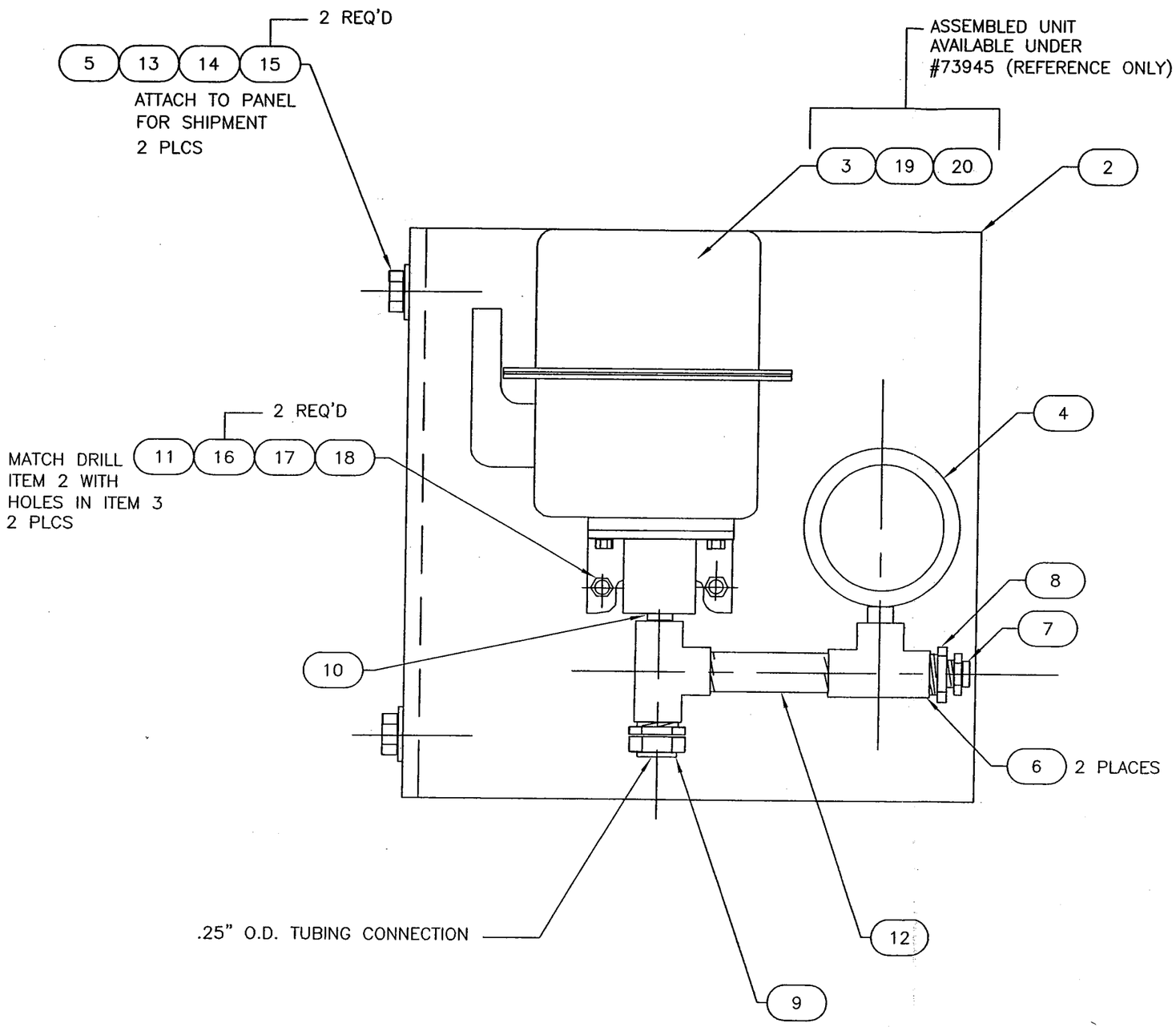

NOTES

1. REMOVE ALL BURRS AND SHARP EDGES CAUSED FROM MATCH DRILLING AND TOUCH UP ANY DAMAGED FINISH.
2. ADHESIVE SCALE SUPPLIED WITH TRANSDUCER TO BE INSTALLED ON SWITCH BODY.

APPLICABLE SPECS.

TAGGING PER EP-2

MK ITEM CODE LOA-32A

SEE SEPARATE BILL OF MATERIAL

REV	DESCRIPTION	DATE	DWN	CHKD	APVD	ECN
D	PURCHASE TRANSDUCER AND BRACKET SEPARATELY	05.01	SMKB	–	–	–

COMPANY CONFIDENTIAL
THIS DOCUMENT AND ALL INFORMATION CONTAINED HEREIN ARE THE PROPERTY OF THE USFILTER AND/OR ITS AFFILIATES ("USF"). THE DESIGN CONCEPTS AND INFORMATION CONTAINED HEREIN ARE PROPRIETARY TO USF AND ARE SUBMITTED IN CONFIDENCE. THEY ARE NOT TRANSFERABLE AND MUST BE USED ONLY FOR THE PURPOSE FOR WHICH THE DOCUMENT IS EXPRESSLY LOANED. THEY MUST NOT BE DISCLOSED, REPRODUCED, LOANED OR USED IN ANY OTHER MANNER WITHOUT THE EXPRESS WRITTEN CONSENT OF USF. IN NO EVENT SHALL THEY BE USED IN ANY MANNER DETRIMENTAL TO THE INTEREST OF USF. ALL PATENT RIGHTS ARE RESERVED. UPON THE DEMAND OF USF, THIS DOCUMENT, ALONG WITH ALL COPIES AND EXTRACTS, AND ALL RELATED NOTES AND ANALYSES, MUST BE RETURNED TO USF OR DESTROYED, AS INSTRUCTED BY USF. ACCEPTANCE OF THE DELIVERY OF THIS DOCUMENT CONSTITUTES AGREEMENT TO THESE TERMS AND CONDITIONS.

DESIGNER	EG	DATE 10/88
CHECKER		DATE
ENGINEER		DATE
MANAGER		DATE
FILE: LOA-32REVD.DWG		
SCALE: NTS		

TITLE
TRIDENT WATER SYSTEMS
HEADLOSS SWITCH ASSEMBLY

CLIENT

USFilter
USFILTER
STURBRIDGE, MA
(508) 347-7344

PROJECT	CODE	DRAWING	SHEET	REV
		LOA-32	1 OF 1	D

STD: 2-0600-11X17B
INTL REF:
BAR = 1" AT PLOT SCALE

Pos.	Item Code	Description	Effect. Date	Expiry Date	Length [in]	Width [in]	No.of Units	Net Quantity	Un.	Scpf [%]	Wrh	Opr	Ph.	Extra Info
Manufactured Item	**: L0A-33A**	**SWITCH ASSY PRESS CLARIFIER**				**Item Owner:**						**BOM Unit:**		**1 ea**
2	C-3055-1	BRACKET MTG SW PRESS	04-18-01					1.0000	ea		WH		Y	
3	288010702	SWITCH PRESS ASCO #P	04-18-01					2.0000	ea		WH		N	

Item Text
SWITCH PRESS ASCO # PB31B

Manufacturer: ASCO
Mfr part no.: PB31B
Description : Pressure Switch
Add'l Info. : Manual Literature Required

4	288010703	GAUGE PRESS 0-5PSI 2	04-18-01					1.0000	ea		WH		N	

Item Text
Ashcroft pressure gauge, 0-5 psig, 2.5 dial, bronze
diaphragm, .25 NPT bottom connection, painted steel case
brass socket, Ashcroft # 25-1490A-02L-0-5 psi.
(Instruction Manuals Required).

5	250100608	BOLT HH 3/8-16x2 CS	04-18-01					2.0000	ea		VMW		N	
6	205090004	TEE STDWT THD 0.25 B	04-18-01					3.0000	ea		WH		N	
7	605020120	VALVE COIN 0.125 NPT	04-18-01					1.0000	ea		VMW		N	

Item Text
VALVE COIN, 0.125 NPT
DOLE # 9 OR CONBRACO # 2720202

8	205010402	BUSH STDWT 0.25x0.12	04-18-01					1.0000	ea		VMW		N	

Item Text
Bushing, Brass std. wt. 1/4" x 1/8"

Manufacturer: PARKER
Mfr part no : 209P-4-2
Description : HEX HEAD PIPE THREAD REDUCER BUSHING
Size/Style : 1/4 MPT x 1/8 FPT
Material : BRASS

9	205340404	CNCTR POLYFL 0.25Tx0	04-18-01					3.0000	ea		VMW		N	

Item Text
CONNECTOR POLYFL 0.25T x 0.25M BRS

Manufacturer: Imperial Eastman
Mfr part no.: 268P-04 x 04,
Style : 1/4"TUBE x 1/4"MPT
Material : BRASS

10	205070414	NIP 0.25x0.875 BRS C	04-18-01					2.0000	ea		WH		N	

Item Text
NIPPLE, 1/4" X 7/8" BRASS

11	I411112	ZZ-REPLACE WITH 7242	04-18-01					0.0000	bx		VMW		N	4 screws

Pos.	Item Code	Description	Effect. Date	Expiry Date	Length [in]	Width [in]	No.of Units	Net Quantity	Un.	Scpf [%]	Wrh	Opr	Ph.	Extra Info
Manufactured Item	**: L0A-33A**	**SWITCH ASSY PRESS CLARIFIER**				**Item Owner:**					**BOM Unit:**			**1 ea**
12	167040450	T POLYF 0.25ODx0.04x	04-18-01					0.3000	ft		WH		N	
	Item Text	T POLYF 0.25 OD x 0.04 x 50ft Manufacturer: Imperial Eastman Mfr Part No : 44-P-N Exp Descr : Natural Poly Flow tubing Size : 1/4" OD (in a 50' roll)												
13	205070448	NIP 0.25x3.0 BRS	04-18-01					1.0000	ea		VMW		N	
14	250150006	NUT HH 3/8-16 CS	04-18-01					2.0000	ea		VMW		N	
15	250210006	WASHER LOCK 3/8 CS	04-18-01					2.0000	ea		VMW		N	
16	250200006	WASHER FLAT 3/8 CS	04-18-01					4.0000	ea		VMW		N	
17	I451001	WASHER FL #10 SS	04-18-01					0.0000	bx		VMW		N	8 washer
18	I451000	WASHER LCK #10 SS	04-18-01					0.0000	bx		VMW		N	4 washer
19	I441010	NUT #10-24 SS	04-18-01					0.0000	bx		VMW		N	4 nuts
20	74718	NAMEPLATE "PSH"	04-18-01					1.0000	ea		WH		N	
	Item Text	NAMEPLATE "PSH" PER MF SPEC PS-4 STYLE F												
21	74725	NAMEPLATE "PSHH"	04-18-01					1.0000	ea		WH		N	
	Item Text	Nameplate "PSHH" PER MF SPEC PS-4 STYLE F												
22	288010708	CONDUIT CONN 90DEG H	04-18-01					1.0000	ea		VMW		N	
	Item Text	CONDUIT 90DEG HUB 0.5X0.5 Appleton 90 degree elbow connector for seal-tight conduit, nylon insulated, M.I., 1/2" hub X, 1/2" flex conduit, # STB9050.												
23	288010705	TRANSDUCER UNIT ASCO	04-18-01					2.0000	ea		WH		N	
	Item Text	TRANSDUCER UNIT ASCO # RD 30A21 Manufacturer: ASCO Mfr Pt No. : # RD30A21 Description : TRANSDUCER UNIT 1/4" NPT female connection Brass with Buna-N seals 0-9 psig adjustment range 60 psig proof pressure												
24	288010706	BRACKET MTG ASCO #PP	04-18-01					2.0000	ea		WH		N	

Pos.	Item Code	Description	Effect. Date	Expiry Date	Length [in]	Width [in]	No.of Units	Net Quantity	Un.	Scpf [%]	Wrh	Opr	Ph.	Extra Info

Manufactured Item : **L0A-33A** **SWITCH ASSY PRESS CLARIFIER** **Item Owner:** **BOM Unit:** **1 ea**

Item Text
BRACKET MOUNTING

Manufacturer: ASCO
Mfr Part No.: PP03

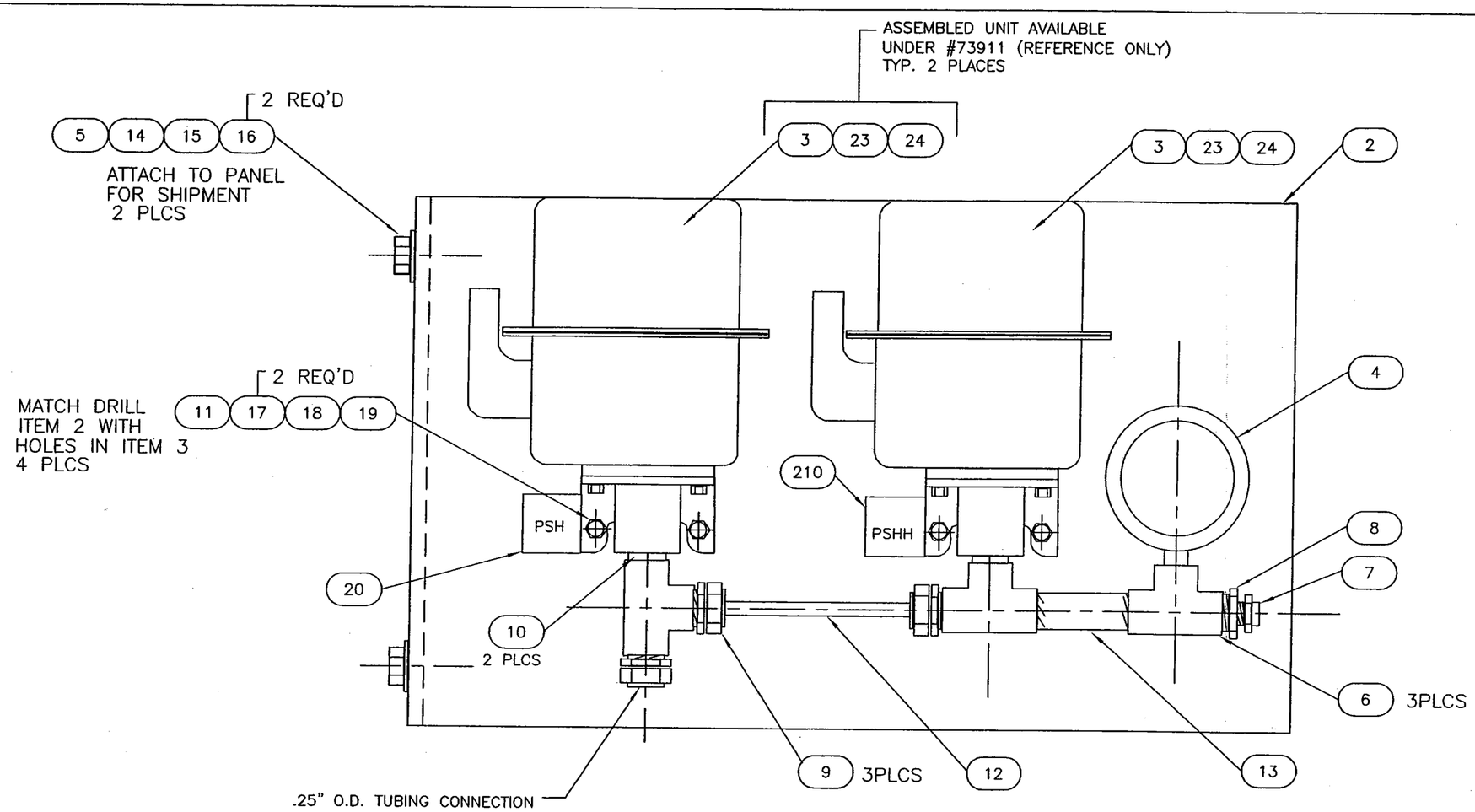

NOTES

1. REMOVE ALL BURRS AND SHARP EDGES CAUSED FROM MATCH DRILLING AND TOUCH UP ANY DAMAGED FINISH.
2. ADHESIVE SCALE SUPPLIED WITH TRANSDUCER TO BE INSTALLED ON SWITCH BODY.

SEE SEPARATE BILL OF MATERIAL

APPLICABLE SPECS.

TAGGING PER EP-2

MK ITEM CODE LOA-33A

REV	DESCRIPTION	DATE	DWN	CHKD	APVD	ECN
E	PURCHASE TRANSDUCER AND BRACKET SEPERATLY	05.01	SMKB	–	–	–

COMPANY CONFIDENTIAL
THIS DOCUMENT AND ALL INFORMATION CONTAINED HEREIN ARE THE PROPERTY OF THE USFILTER AND/OR ITS AFFILIATES ("USF"). THE DESIGN CONCEPTS AND INFORMATION CONTAINED HEREIN ARE PROPRIETARY TO USF AND ARE SUBMITTED IN CONFIDENCE. THEY ARE NOT TRANSFERABLE AND MUST BE USED ONLY FOR THE PURPOSE FOR WHICH THE DOCUMENT IS EXPRESSLY LOANED. THEY MUST NOT BE DISCLOSED, REPRODUCED, LOANED OR USED IN ANY OTHER MANNER WITHOUT THE EXPRESS WRITTEN CONSENT OF USF. IN NO EVENT SHALL THEY BE USED IN ANY MANNER DETRIMENTAL TO THE INTEREST OF USF. ALL PATENT RIGHTS ARE RESERVED. UPON THE DEMAND OF USF, THIS DOCUMENT, ALONG WITH ALL COPIES AND EXTRACTS, AND ALL RELATED NOTES AND ANALYSES, MUST BE RETURNED TO USF OR DESTROYED, AS INSTRUCTED BY USF. ACCEPTANCE OF THE DELIVERY OF THIS DOCUMENT CONSTITUTES AGREEMENT TO THESE TERMS AND CONDITIONS.

DESIGNER	EG	DATE 10/86
CHECKER	VSA	DATE
ENGINEER		DATE
MANAGER		DATE
FILE:	LOA-33REVE	
SCALE:	NTS	

TITLE
TRIDENT WATER SYSTEMS
CLARIFIER PRESSURE SWITCH ASSEMBLY

CLIENT

USFilter
441 MAIN STREET
STURBRIDGE, MA 01562
TEL: 1-800-636-2674

PROJECT	CODE	DRAWING	SHEET	REV
		LOA-33	1 OF 1	E

BAR = 1" AT PLOT SCALE

INTL REF:

STD: 2-0600-11X17B

Pos.	Item Code	Description	Effect. Date	Expiry Date	Length [in]	Width [in]	No.of Units	Net Quantity	Un.	Scpf [%]	Wrh	Opr	Ph.	Extra Info
Manufactured Item	**: L0A-35**	**SWITCH ASSY BLOWER PRESS**				**Item Owner:**					**BOM Unit:**			**1 ea**
10	C-3056-1	BRACKET MTG SW HEADL	12-13-00					1.0000	ea		WH		Y	
20	73911	SWITCH PRESS 0-9PSI	12-13-00					1.0000	ea		WH		Y	

Item Text
PRESSURE SWITCH, 0-9 PSI,
60 PSI PROOF PRESSURE, FIXED DEADBAND,
WATERTIGHT TYPE 4,
1 PRESSURE SWITCH # PB31B
1 TRANSDUCER UNIT # RD30A21
1 MOUNTING BRACKET # PP03
ASSEMBLED UNIT ASCO # PB31B/RD30A21
(MANUAL LITERATURE REQUIRED)

30	97177	GAUGE PRESS 0-10PSI	12-13-00					1.0000	ea		WH		N	

Item Text
PRESSURE GAUGE, 0-10 PSI, 4 1/2",
0.25 NPT BOTTOM CONNECTION-BRASS SOCKET & BELLOWS-
ALUMINUM, BLACK EPOXY COATED CASE-
ASHCROFT 45-1189-A-02L-10PSI
(MANUAL LITERATURE REQUIRED)

40	250100604	BOLT HH 3/8-16x1 CS	12-13-00					2.0000	ea		VMW		N	
50	205090004	TEE STDWT THD 0.25 B	12-13-00					2.0000	ea		WH		N	
60	605020120	VALVE COIN 0.125 NPT	12-13-00					1.0000	ea		VMW		N	

Item Text
VALVE COIN, 0.125 NPT
DOLE # 9 OR CONBRACO # 2720202

70	205010402	BUSH STDWT 0.25x0.12	12-13-00					1.0000	ea		WH		N	

Item Text
Bushing, Brass std. wt. 1/4" x 1/8"

Manufacturer: PARKER
Mfr part no : 209P-4-2
Description : HEX HEAD PIPE THREAD REDUCER BUSHING
Size/Style : 1/4 MPT x 1/8 FPT
Material : BRASS

80	205340404	CNCTR POLYFL 0.25Tx0	12-13-00					1.0000	ea		VMW		N	

Item Text
CONNECTOR POLYFL 0.25T x 0.25M BRS

Manufacturer: Imperial Eastman
Mfr part no.: 268P-04 x 04,
Style : 1/4"TUBE x 1/4"MPT
Material : BRASS

90	205070414	NIP 0.25x0.875 BRS C	12-13-00					1.0000	ea		WH		N	

Manufactured Item : L0A-35 **SWITCH ASSY BLOWER PRESS** **Item Owner:** **BOM Unit: 1 ea**

Item Text
NIPPLE, 1/4" X 7/8" BRASS

Pos.	Item Code	Description	Effect. Date	Expiry Date	Length [in]	Width [in]	No.of Units	Net Quantity	Un.	Scpf [%]	Wrh	Opr	Ph.	Extra Info
100	73714	SCRW RND HD MACH #10	12-13-00					2.0000	ea		WH		N	

Item Text
MACHINE SCREW ROUND HEAD # 10-24x3/4
ZNPS

110	81212	NIP 0.25x5.0 BRS	12-13-00					1.0000	ea		VMW		N	
120	250150006	NUT HH 3/8-16 CS	12-13-00					2.0000	ea		VMW		N	
130	250210006	WASHER LOCK 3/8 CS	12-13-00					2.0000	ea		VMW		N	
140	250200006	WASHER FLAT 3/8 CS	12-13-00					4.0000	ea		VMW		N	
150	72499	WASHER FL #10 ZPS SA	12-13-00					4.0000	ea		VMW		N	
160	74009	WASHER LCK #10 ZPS S	12-13-00					2.0000	ea		WH		N	
170	72502	NUT HH #10-24 ZPS	12-13-00					2.0000	ea		VMW		N	

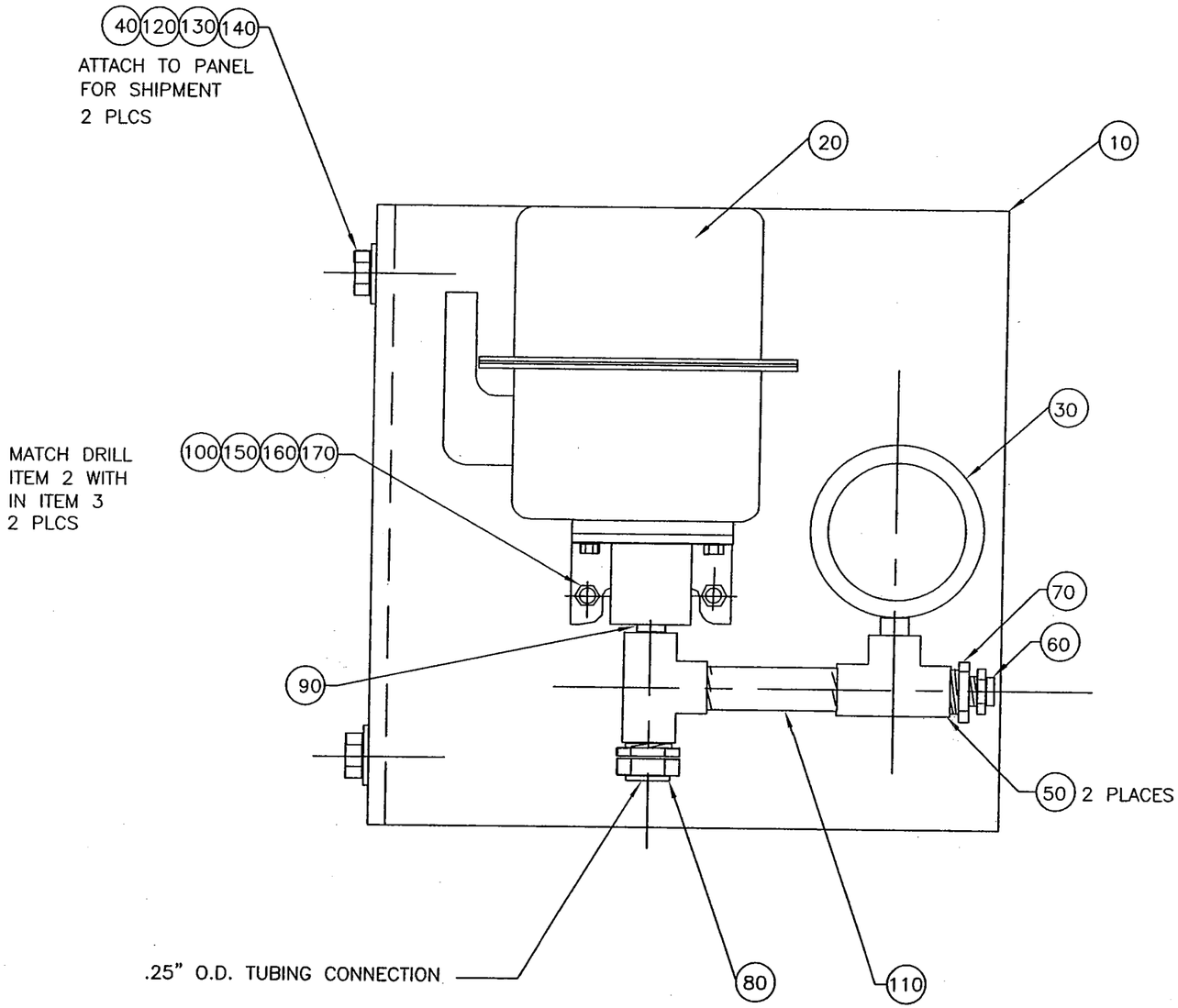

NOTES

1. REMOVE ALL BURRS AND SHARP EDGES CAUSED FROM MATCH DRILLING AND TOUCH UP ANY DAMAGED FINISH.

APPLICABLE SPECS.

TAGGING PER EP-2

MK ITEM CODE LOA-35

BAR = 1" AT PLOT SCALE

INTL REF:

STD: 2-0600-11X17B

REV	DESCRIPTION	DATE	DWN	CHKD	APVD	ECN

COMPANY CONFIDENTIAL
THIS DOCUMENT AND ALL INFORMATION CONTAINED HEREIN ARE THE PROPERTY OF THE USFILTER AND/OR ITS AFFILIATES ("USF"). THE DESIGN CONCEPTS AND INFORMATION CONTAINED HEREIN ARE PROPRIETARY TO USF AND ARE SUBMITTED IN CONFIDENCE. THEY ARE NOT TRANSFERABLE AND MUST BE USED ONLY FOR THE PURPOSE FOR WHICH THE DOCUMENT IS EXPRESSLY LOANED. THEY MUST NOT BE DISCLOSED, REPRODUCED, LOANED OR USED IN ANY OTHER MANNER WITHOUT THE EXPRESS WRITTEN CONSENT OF USF. IN NO EVENT SHALL THEY BE USED IN ANY MANNER DETRIMENTAL TO THE INTEREST OF USF. ALL PATENT RIGHTS ARE RESERVED. UPON THE DEMAND OF USF, THIS DOCUMENT, ALONG WITH ALL COPIES AND EXTRACTS, AND ALL RELATED NOTES AND ANALYSES, MUST BE RETURNED TO USF OR DESTROYED, AS INSTRUCTED BY USF. ACCEPTANCE OF THE DELIVERY OF THIS DOCUMENT CONSTITUTES AGREEMENT TO THESE TERMS AND CONDITIONS.

DESIGNER	DATE
CHECKER	DATE
ENGINEER	DATE
MANAGER	DATE
FILE: LOA-35	
SCALE: NTS	

TITLE
TRI-MITE WATER SYSTEMS
BLOWER PRESSURE SWITCH ASSEMBLY

CLIENT

USFilter

441 MAIN STREET
STURBRIDGE, MA 01562
TEL: 1-800-636-2674

PROJECT	CODE	DRAWING	SHEET	REV
		LOA-35	1 OF 1	-

CHEMICAL FEED SYSTEM – BY OTHERS

ELECTRICAL & CONTROLS DETAIL

1 Power Panel Assembly
Drawing #3100368032
BOM # 3100368032

2 Control Panel Assembly
Drawing #3100368031
BOM #3100368031

3 One Line Diagram
Drawing #3100367122

4 Electrical Schematic
Drawing #3100367121

5 Instrument Loop Diagram
Drawing #3100367123

Project : 310036 NASA JPL, Pasadena, CA
BOM Pos.: 0 - 9999
Customer: I00210 USF/Envirex

I/C TM-350A w/tritons

Status : Active
Start Date: 03-09-04
End Dt :

Manufactured Item: 3100368032 **PANEL ASMY POWER TM-350A 480V** **BOM Unit: 1 ea**

SEE DRAWING 3100368032

Pos.	Item Code	Description	Item Type	Length in]	Width [in]	No.of Units	Net Quantity	Un.	Scrap [%]	Wrh	Opr.	Ph.	Extra Info
10	1000524	ENCLOSURE NEMA4 42x31x12	Cu				1.0000	ea		WH		N	

Item Text
Single door enclosure,
NEMA 4 for Flange-Mounted Disconnect,
Size 42" H. x 31.38" W. x 12" deep.
Hoffman # A-42HS3112LP

20	1000525	SUB-PANEL 42x30 ENCLOSURE	Cu				1.0000	ea		WH		N	

Item Text
Sub panel for use in 42" x 31" enclosure
Hoffman # A-42P30

30	121127	DISCONNECT SWITCH ONLY FLG MT	Cu				1.0000	ea		WH		N	

Item Text
DISCONNECT SWITCH, FGLANGE MOUNT, 100AMP, ALLEN-BRADLEY
1494V-DS100

40	1000476	DISCONNECT ROD FLG MT	St				1.0000	ea		WH		N	

Item Text
DISCONNECT ROD, FLANGE MOUNT ALLEN-BRADLEY NO. 1494V-RA2

50	90473	DISCONNECT HANDLE FLG MT	Cu				1.0000	ea		WH		N	

Item Text
DISCONNECT HANDLE, FLANGE MOUNT
ALLEN-BRADLEY No. 1494V-W1

60	1000477	DISCONNECT FUSE CLIP 100A	Cu				1.0000	ea		WH		N	

Item Text
ALLEN-BRADLEY 1401-N44

70	121129	DISCONNECT FUSE BLOCK 100A	Cu				1.0000	ea		WH		N	

Item Text
DISCONNECT FUSE BLOCK, ALLEN-BRADLEY 1494V-FS100

80	1000478	KIT, DOOR HARDWARE 1494V-L1	Cu				1.0000	ea		WH		N	

Item Text
DOOR HARDWARE KIT
TOP & SIDE - RIGHT HAND
CAT. NO. - 1494V-L1
ALLEN-BRADLEY

90	1000479	CONNECTOR LUG 100A	Cu					2.0000	ea	WH	N

Item Text
LUG CONNECTOR
DISCONNECT SIZE - 100A
8... 1/0 AWG WIRE
FOR USE WITH 1494V DISCONNECT SWITCHES
CAT. NO. - 1494R-N2
ALLEN-BRADLEY

100	6059122	FUSE 80A LPJ	St					3.0000	ea	VMW	N

Item Text
Manufacturer: BUSSMAN
Mfr Part No : LPJ-80SP
Vendor: 368
Size: 80 AMP
Addl.Info: LITTLEFUSE JTD080ID IS ACCEPTABLE REPL PER
BILL GROOM 6/02.
EQUIVALENT ALTERNATIVES MAY BE SUBSTITUTED ON APP
ROVAL
FROM MEMCOR ENGINEERING

110	1000481	STARTER PROTECTOR SIZE S2	Cu					1.0000	ea	WH	N

Item Text
STARTER PROTECTOR, SIZE S2,
GROUP INSTALLATION-
FOR FLA RANGE 28-40
MANUFACTURED BY SIEMENS-FURNAS
CATALOGUE NUMBER 3RV1031-4FA10 SIZE S2
(INSTRUCTION MANUALS REQUIRED)

120	1000482	CONTACTOR IEC 120VAC COIL 35A	Cu					1.0000	ea	WH	N

Item Text
CONTACTOR IEC 120 VAC, COIL 35A,
3 POLE W/AC COIL FOR USE WITH SIRIUS MSP 3RV103
SIZE S2-WITH SCREW TERMINALS-
MANUFACTURED BY SIEMENS-
CATALOGUE NUMBER 3RT1034-1AK60
(INSTRUCTION MANUALS REQUIRED)

130	117383	STARTER PROTECTOR ADAPTER	Cu					1.0000	ea	WH	N

Item Text
STARTER PROTECTOR ADAPTER,
FOR DIN RAIL MOUNTING,
FOR USE WITH 3RV103 MSP AND
3RT103 CONTACTOR
PART NUMBER 3RA1932-1A
(INSTRUCTION MANUALS REQUIRED)

140	117107	STARTER PROTECTOR LINK MODULE	Cu					1.0000	ea	WH	N

Item Text
STARTER PROTECTOR LINK MODULE,
MANUFACTURED BY SIEMENS-
SIRIUS CATALOGUE NUMBER 3RA1931-1A-FOR AC ONLY
USE WITH 3RV103 MOTOR STARTER PROTECTOR
AND 3RT103 CONTACTOR

Project : 310036 NASA JPL, Pasadena, CA
BOM Pos.: 0 - 9999
Customer: I00210 USF/Envirex

I/C TM-350A w/tritons

Status : Active
Start Date: 03-09-04
End Dt :

Pos.	Item Code	Description	Item Type	Length in]	Width [in]	No.of Units	Net Quantity	Un.	Scrap [%]	Wrh	Opr.	Ph.	Extra Info
Manufactured Item:	**3100368032**	**PANEL ASMY POWER TM-350A 480V**											**BOM Unit: 1 ea**
		(INSTRUCTION MANUAL REQUIRED)											
150	117102	STARTER PROTECTOR SIZE S0	St				2.0000	ea		WH		N	
		Item Text: STARTER PROTECTOR, SIZE S0, GROUP INSTALLATION- FOR FLA RANGE 11-16 MANUFACTURED BY SIEMENS-SIRIUS CATALOGUE NUMBER 3RV1021-4AA10 SIZE 0 (INSTRUCTION MANUALS REQUIRED)											
160	117106	STARTER PROTECTOR LINK MODULE	Cu				2.0000	ea		WH		N	
		Item Text: STARTER PROTECTOR LINK MODULE, MANUFACTURED BY SIEMENS- SIRIUS CATALOGUE NUMBER 3RA1921-1A-FOR AC ONLY USE WITH 3RV102 MOTOR STARTER PROTECTOR AND 3RT102 CONTACTOR (INSTRUCTION MANUAL REQUIRED)											
170	1000484	CONTACTOR IEC 120VAC COIL 35A	Cu				2.0000	ea		WH		N	
		Item Text: CONTACTOR IEC 120 VAC, COIL 35A, 3 POLE W/AC COIL FOR USE WITH SIRIUS MSP 3RV102 SIZE S0-WITH SCREW TERMINALS- MANUFACTURED BY SIEMENS- CATALOGUE NUMBER 3RT1024-1AK60 (INSTRUCTION MANUALS REQUIRED)											
180	288010233	RAIL DIN ENTRELEC 35MMx7.5MM	St	24.00		1	0.3046	2m		IA		N	
190	I7D1530	DUCT WIRE PANDUIT G1.5X3LG6	St	48.00		1	4.0000	ft		IA		N	
200	I7C0015	DUCT COVER,1.5,PANDUIT C1.5LG6	St	48.00		1	4.0000	ft		VMW		N	
210	3100364109	TRANSFORMER 240/480-120 1000VA	Cu				1.0000	ea		WH		N	
		Item Text: Manufacturer: HEVI-DUTY Mfr Part No : E1000-FBP Size: 1000 VA Addl.Info: CONTROL TRANSFORMER TYPE SBE, W/ FUSE BLOCK 240/480V PRIMARY, 120VAC SECONDARY											
220	3100364110	FUSE 2.5A LP-CC	Cu				2.0000	ea		IA		N	

Project : 310036 NASA JPL, Pasadena, CA
BOM Pos.: 0 - 9999
Customer: I00210 USF/Envirex

I/C TM-350A w/tritons

Status : Active
Start Date: 03-09-04
End Dt :

Pos.	Item Code	Description	Item Type	Length in]	Width [in]	No.of Units	Net Quantity	Un.	Scrap [%]	Wrh	Opr.	Ph.	Extra Info

Manufactured Item: 3100368032 **PANEL ASMY POWER TM-350A 480V** **BOM Unit: 1 ea**

SEE DRAWING 3100368032

Item Text
FUSE 2.5A LP-CC

Manufacturer: BUSSMAN
Mfr Part No : LP-CC 2.5 AMP
Rating: 600 VAC (OR LESS)
Size: 13/32" X 1 1/2"
Addl.Info: 2.5 AMP

230	6059006	FUSE 10A FNQ	St					1.0000	ea		VMW		N

Item Text
FUSE, 10 A FNQ

Manufacturer: BUSSMAN
Mfr Part No : FNQ-10 AMP
Vendor: 368
Size: 10 AMP

Alternate: L-FSE FLQ010

240	254100402	BOLT HH 1/4-20x1/2 SS	St					4.0000	ea		VMW		N
250	254150004	NUT HH 1/4-20 SS	St					4.0000	ea		VMW		N
260	254210004	WASHER LOCK 1/4 SS	St					4.0000	ea		VMW		N
270	254200004	WASHER FLAT 1/4 SS	St					4.0000	ea		VMW		N
280	288010230	TERMINAL ENTRELEC 600V 30A	St					8.0000	ea		IA		N

Item Text
TERMINAL ENTRELEC 600V 30A
600 V., 30amp Terminal, # 115 116.07.

290	288010235	BARRIER END ENTRELEC 118368.16	St					1.0000	ea		IA		N

Item Text
BARRIER END ENTRELEC 118368.16

Manufacturer: Entrelec
Mfr Part No.: # 118 368.16
Exp Descrip.: Block, end section, type FEM6

Project : 310036 NASA JPL, Pasadena, CA
BOM Pos.: 0 - 9999
Customer: I00210 USF/Envirex

I/C TM-350A w/tritons

Status : Active
Start Date: 03-09-04
End Dt :

Manufactured Item: 3100368032 **PANEL ASMY POWER TM-350A 480V** **BOM Unit: 1 ea**

SEE DRAWING 3100368032

Pos.	Item Code	Description	Item Type	Length in]	Width [in]	No.of Units	Net Quantity	Un.	Scrap [%]	Wrh	Opr.	Ph.	Extra Info
300	288010232	ANCHOR END ENTRELEC 103002.26	St				2.0000	ea		VMW		N	
310	288010234	MARKERS TERM ENTRELEC	St				1.0000	ea		VMW		N	
320	288010233	RAIL DIN ENTRELEC 35MMx7.5MM	St	12.00		1	0.1523	2m		IA		N	
330	93384	BREAKER CIRCUIT 15AMP 1-POLE	St				2.0000	ea		VMW		N	

Item Text
BREAKER CIRCUIT 15AMP 1-POLE DIN RAIL MOUNTED 15 AMP
BREAKER, ENTRELEC # GMU15U53

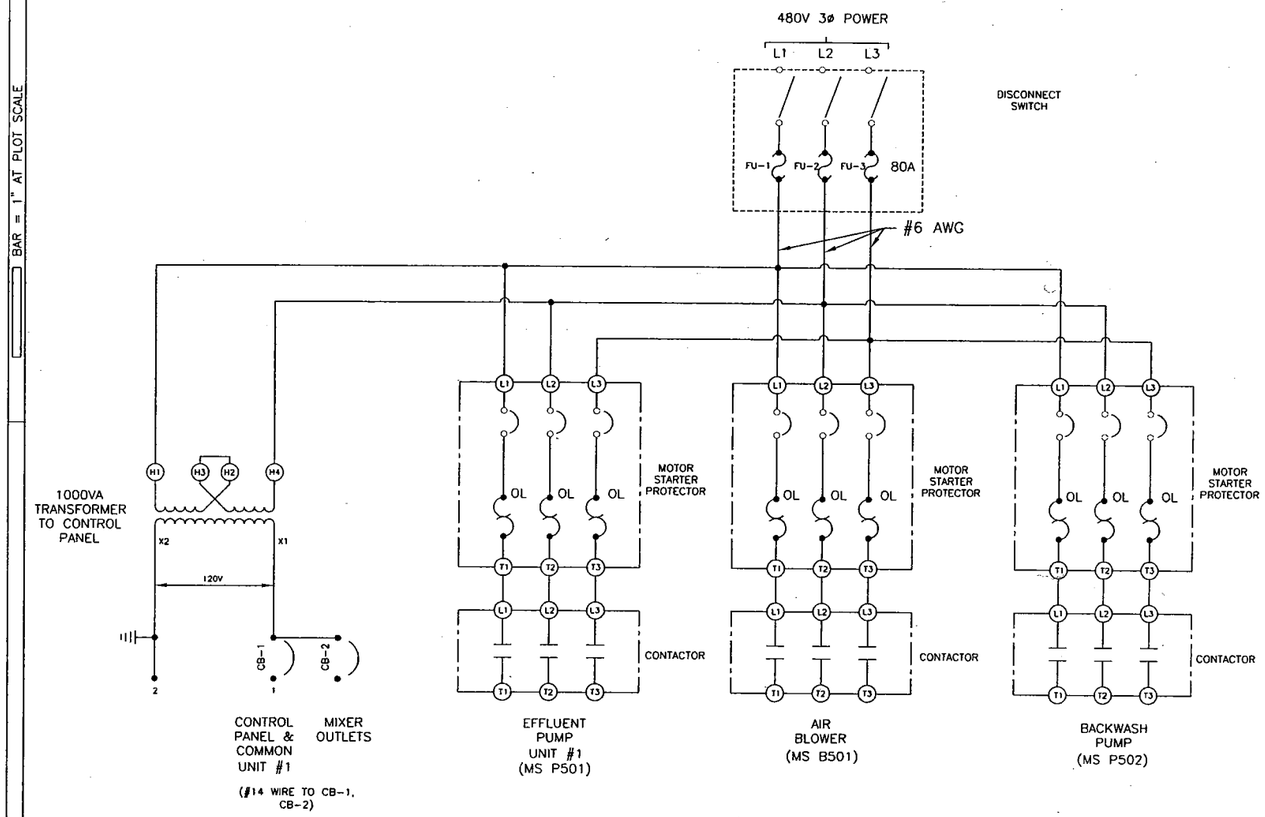

POWER WIRING

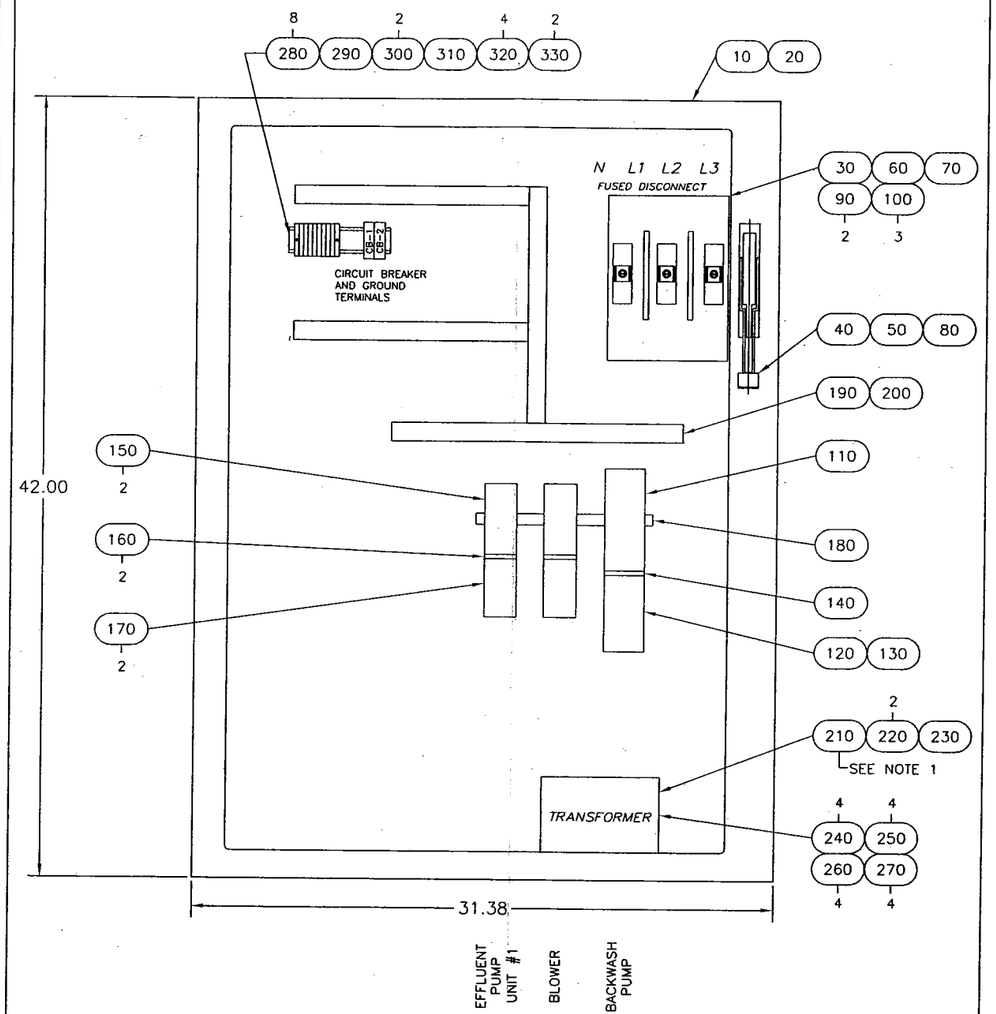

POWER PANEL ASSEMBLY

NOTES:

1. FASTEN TRANSFORMER TO "FLOOR" OF ENCLOSURE.
2. LABEL ALL INTERNAL DEVICES WITH PERMANENT MARKERS.

APPLICABLE SPECS:

FASTENERS-PS-20
FINISH=FS-56 EXTERIOR
CUTOUTS=PS-3
WIRING=PS-2
NAMEPLATES=PS-4

REFERENCE DWGS:

ELECTRICAL SCHEMATIC 3100367121
ELECTRICAL INTERCONNECTION DIAGRAM 3100367122
INSTRUMENTATION LOOP 3100367123

CONTROL WIRING

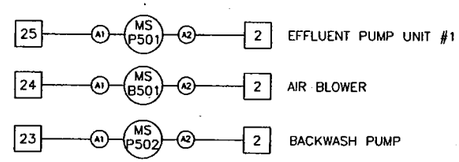

REV	DESCRIPTION	DATE	DWN	CHKD	APVD	ECN
2	REVISED TAG NUMBERS TO MATCH PROJECT LIST.	05/06/04	SJT	–	–	–

COMPANY CONFIDENTIAL
THIS DOCUMENT AND ALL INFORMATION CONTAINED HEREIN ARE THE PROPERTY OF THE USFILTER AND/OR ITS AFFILIATES ("USF"). THE DESIGN CONCEPTS AND INFORMATION CONTAINED HEREIN ARE PROPRIETARY TO USF AND ARE SUBMITTED IN CONFIDENCE. THEY ARE NOT TRANSFERABLE AND MUST BE USED ONLY FOR THE PURPOSE FOR WHICH THE DOCUMENT IS EXPRESSLY LOANED. THEY MUST NOT BE DISCLOSED, REPRODUCED, LOANED OR USED IN ANY OTHER MANNER WITHOUT THE EXPRESS WRITTEN CONSENT OF USF. IN NO EVENT SHALL THEY BE USED IN ANY MANNER DETRIMENTAL TO THE INTEREST OF USF. ALL PATENT RIGHTS ARE RESERVED. UPON THE DEMAND OF USF, THIS DOCUMENT, ALONG WITH ALL COPIES AND EXTRACTS, AND ALL RELATED NOTES AND ANALYSES, MUST BE RETURNED TO USF OR DESTROYED, AS INSTRUCTED BY USF. ACCEPTANCE OF THE DELIVERY OF THIS DOCUMENT CONSTITUTES AGREEMENT TO THESE TERMS AND CONDITIONS.

DESIGNER		DATE
CHECKER		DATE
ENGINEER	SJT	DATE 03/31/04
MANAGER		DATE –
FILE: K0A-15C		
SCALE: NTS		

TITLE TM-350A POWER PANEL ASSEMBLY
480V, 3PH, 4 WIRE POWER W/ TRANSFORMER

CLIENT NASA JPL
PASADENA, CA

USFilter
441 MAIN STREET
STURBRIDGE, MA 01562
TEL: 1-800-636-2674

PROJECT	CODE	DRAWING	SHEET	REV
310036		3100368032	1 OF 1	2

BAR = 1" AT PLOT SCALE
INTL REF:
STD: 2-0600-11X17B

CUSTOMIZED BILL OF MATERIAL

Project : 310036 NASA JPL, Pasadena, CA
BOM Pos.: 0 - 9999
Customer: I00210 USF/Envirex

I/C TM-350A w/tritons

Status : Active
Start Date: 03-09-04
End Dt :

Pos.	Item Code	Description	Item Type	Length in]	Width [in]	No.of Units	Net Quantity	Un.	Scrap [%]	Wrh	Opr.	Ph.	Extra Info
Manufactured Item:	**3100368031**	**PANEL ASSY CONTROL TM 350A**											**BOM Unit: 1 ea**
		SEE DRAWING 3100368031											
20	1000545	ENCLOSURE NEMA4 36x30x12 STL	Cu				1.0000	ea		IA		N	
		Item Text: ENCLOSURE, NEMA 4, 36x30X12, STEEL, SINGLE DOOR, UL508, WITH ONE 3-POINT LATCH, WITH ANSI 61 GRAY INSIDE AND OUTSIDE FINISH HOFFMAN MODEL CONCEPT C-SD363012											
30	1000546	SUB-PANEL 36x30 ENCLOSURE	Cu				1.0000	ea		IA		N	
		Item Text: SUB-PANEL 34.2 x 28.2 Sub panel for use in 36" x 30" enclosure Hoffman # C-P3630											
40	74871	CHASSIS 10 SLOT DL305	Cu				1.0000	ea		WH		N	
		Item Text: CHASSIS 10 SLOT DL305 INTERNAL 110/220 VAC 50/60 HZ POWER SUPPLY, KOYO # D3-10B-1											
50	80777	MODULE CPU DL340	Cu				1.0000	ea		WH		N	
		Item Text: MODULE CPU DL340 3.7K WORDS RAM BUILT-IN RS-232 NETWORKING PORTS KOYO # D3-340 (MANUAL LITERATURE REQUIRED)											
60	77501	PROGRAMMER HANDHELD DL305	Cu				1.0000	ea		WH		N	
		Item Text: HANDHELD PROGRAMMER DL 305, KOYO # D3-HP w/ CABLE FOR INTERFACE WITH CASSETTE RECORDER (MANUAL LITERATURE IS REQUIRED)											
70	73611	MODULE INPUT DISCRETE DL305 8	Cu				2.0000	ea		WH		N	

Project : 310036 NASA JPL, Pasadena, CA I/C TM-350A w/tritons Status : Active
BOM Pos.: 0 - 9999 Start Date: 03-09-04
Customer: I00210 USF/Envirex End Dt :

Pos.	Item Code	Description	Item Type	Length in]	Width [in]	No.of Units	Net Quantity	Un.	Scrap [%]	Wrh	Opr.	Ph.	Extra Info
Manufactured Item:	**3100368031**	**PANEL ASSY CONTROL TM 350A**										**BOM Unit:**	**1 ea**

SEE DRAWING 3100368031

Item Text
MODULE INPUT DISCRETE DL 305 8,

Manufacturer: AUTOMATION DIRECT
Mfr Part No.: # D3-08NA-1
Description : 8 PT 110VAC INPUT MODULE,
(MANUAL LITERATURE REQUIRED)

80	73612	MODULE OUTPUT RELAY DL305 8PT	Cu				3.0000	ea		WH		N	

Item Text
MODULE OUTPUT RELAY DL 305, 8 PT

Manufacturer: AUTOMATION DIRECT
Mfr Part No.: # D3-08TR
Add'l Info. : 5-30 VDC or 5-220 VAC OUTPUTS,
(MANUAL LITERATURE REQUIRED)

90	3100364120	MODULE OUTPUT ANALOG 2CH	Cu				1.0000	ea		WH		N	

Item Text
MODULE OUTPUT ANALOG DL305 2CH,
KOYO # D3-02DA
(MANUAL LITERATURE REQUIRED)

100	6055202	DUCT WIRE W/COVER 2.0x2.0 GREY	St				0.5000	ea		IA		N	

Item Text
WIRE DUCT 2.0 x 2.0 w/COVER

Manufacturer: PANDUIT
Mfr Part No : G2X2LG6 with COVER C2LG6
Size : 2IN WIDE X 2IN DEEP x 6FT LENGTHS
Material : PVC (GRAY)
ALTERNATES : ENGLISH # T1-2222-GREY
VOTEX # WDS-0808-0072 with WDC-08
TAYLOR # 2020-9 with 0020-9

110	I7D1020	DUCT WIRE PANDUIT #G1X2LG6	St				2.0000	ft		IA		N	
120	81354	RELAY MIDGET 120VAC 10A DPDT	St				9.0000	ea		VMW		N	

Item Text
RELAY MIDGET 120 VAC, 10A, DPDT,
W/INDICATOR LIGHT

Project : 310036 NASA JPL, Pasadena, CA
BOM Pos.: 0 - 9999
Customer: I00210 USF/Envirex

I/C TM-350A w/tritons

Status : Active
Start Date: 03-09-04
End Dt :

Manufactured Item: 3100368031 **PANEL ASSY CONTROL TM 350A** **BOM Unit: 1 ea**

Pos.	Item Code	Description	Item Type	Length in]	Width [in]	No.of Units	Net Quantity	Un.	Scrap [%]	Wrh	Opr.	Ph.	Extra Info
		ACI # 9666A1203 OR IDEC # RH2B/UL/AC120 NO SUBSTITUTION ACCEPTED WITHOUT US FILTER/ENGR. AUTHORIZATION IF ACI RELAY IS USED THEN ACI BASE, MK ITEM # 1000914 MUST BE USED FOR UL LISTING IF IDEC RELAY IS USED THEN IDEC BASE, MK ITEM # 6306028 MUST BE USED FOR UL LISTING											
130	6306028	SOCKET DIN MT FLAT PIN	St				9.0000	ea		WH		N	
		Item Text SOCKET DIN MT FLAT PIN Manufacturer: IDEC Mfr Part No : SH2B-05C Detail Descp: SOCKET, PLUG IN RELAY DO NOT PURCHASE - USE p/n 77507 03/11/04 PER SCOTT RAUB											
140	73615	FUSE 10A NTIME 5.0MMx20.0MM	St				2.0000	ea		VMW		N	
		Item Text FUSE, 10 AMP, NORMAL BLOW, 5mm x 20 mm SIZE, BUSSMAN # GMA10											
150	97804	BLOCK TERM FUSIBLE	St				2.0000	ea		VMW		N	
		Item Text BLOCK TERMINAL FUSIBLE, FOR 5mm x 20mm FUSE- 22-10 GA-600V-10 AMPS- TYPE M4/8.SF- ENTRELEC # 115 657.25											
160	288010233	RAIL DIN ENTRELEC 35MMx7.5MM	St	75.00		1	0.9518	2m		IA		N	
170	288010230	TERMINAL ENTRELEC 600V 30A	St				55.0000	ea		IA		N	

Project : 310036 NASA JPL, Pasadena, CA
BOM Pos.: 0 - 9999
Customer: I00210 USF/Envirex

I/C TM-350A w/tritons

Status : Active
Start Date: 03-09-04
End Dt :

Pos.	Item Code	Description	Item Type	Length in]	Width [in]	No.of Units	Net Quantity	Un.	Scrap [%]	Wrh	Opr.	Ph.	Extra Info
Manufactured Item:	**3100368031**	**PANEL ASSY CONTROL TM 350A**											**BOM Unit: 1 ea**
		SEE DRAWING 3100368031											
		Item Text: TERMINAL ENTRELEC 600V 30A 600 V., 30amp Terminal, # 115 116.07.											
180	288010230	TERMINAL ENTRELEC 600V 30A	St				5.0000	ea		IA		N	
		Item Text: TERMINAL ENTRELEC 600V 30A 600 V., 30amp Terminal, # 115 116.07.											
190	288010232	ANCHOR END ENTRELEC 103002.26	St				6.0000	ea		VMW		N	
210	288010242	JUMPER STRIP ENTRELEC 11654112	St				2.0000	ea		VMW		N	
		Item Text: Entrelec jumper strip, 10 pole, part # 116-541.12 (Each strip contains 10 poles.)											
220	75098	LENS FLAT TOP DUAL PILOT GREEN	Cu				2.0000	ea		WH		N	
		Item Text: BUTTON COVER FOR USE ON KXPB LAMPS SQUARE D CLASS 9001 TYPE KXAC28G											
230	77529	PEN MARKING BLK ENTRELEC	St				2.0000	ea		VMW		N	
		Item Text: PEN, MARKING, BLACK, ENTRELEC NO.164 386.27 OR MAY SUB FOR A-B 1492-N88.											
240	74875	LIGHT SINGLE FULL VOLT 30.5mm	Cu				1.0000	ea		WH		N	
		Item Text: LIGHT SINGLE FULL VOLT 30.5mm, 24-28 VOLT AC/DC- 30.5 MM SQUARE SINGLE STANDARD PILOT LIGHT-WITHOUT COLOR CAP -SQUARE D CLASS 9001 TYPE KXPA 35 (MANUAL LITERATURE REQUIRED)											
250	74876	LIGHT DUAL FULL VOLTAGE 30.5mm	Cu				2.0000	ea		WH		N	
		Item Text: LIGHT DUAL FULL VOLTAGE 30.5mm, 24-28 VOLT AC/DC- 30.5 MM-SQUARE DUAL STANDARD PILOT LIGHT-WITHOUT COLOR CAP -SQUARE D CLASS 9001 TYPE KXPB34											

260	74877	LENS FLAT TOP DUAL PILOT AMBER	Cu					2.0000	ea	WH	N
		Item Text: BUTTON COVER FOR USE ON KXPB LAMPS, SQUARE D CLASS 9001 TYPE KXAC28A									
270	74878	LENS FLAT TOP SINGLE PILOT RED	Cu					1.0000	ea	WH	N
		Item Text: LENS FLAT TOP SINGLE PILOT RED BUTTON COVER FOR USE ON KXPA LAMPS, SQUARE D CLASS 9001 TYPE KXAR8									
280	74881	SWITCH PB STD 30.5mm	St					2.0000	ea	WH	N
		Item Text: SWITCH PB STD 30.5mm OPERATOR, BLACK, CUTLER-HAMMER # 10250T-101									
290	73647	SWITCH MAINT 2 POS	St					1.0000	ea	WH	N
		Item Text: SWITCH, MAINTAINED, 2-POSITION, CUTLER HAMMER MODEL # 10250T-4011									
300	74879	SWITCH SPR RET 3-POSITION	Cu					1.0000	ea	WH	N
		Item Text: SWITCH SPRING RETURN, 3 POSITION, RETURN TO CENTER POSITION FROM RIGHT OR LEFT-CAM CODE 3- CUTLER HAMMER # 10250T-4043									
310	73648	BLOCK CONTACT 2 N.O.	St					4.0000	ea	VMW	N
		Item Text: CONTACT BLOCK, 2 N.O. CUTLER-HAMMER # 10250T-2									
320	74882	NAMEPLATE "1-2"	Cu					1.0000	ea	WH	N
		Item Text: STYLE E, PER MF SPEC. PS-4 OR CUTLER-HAMMER # 10250T-M36									
330	73650	NAMEPLATE "OFF-ON"	Cu					1.0000	ea	WH	N
		Item Text: NAMEPLATE "OFF-ON" STYLE E, SPEC. PS-4 or CUTLER-HAMMER # 10250T-M36									
340	74883	NAMEPLATE "FLUSH INITIATE"	St					1.0000	ea	WH	N
		Item Text: NAMEPLATE "FLUSH INITIATE" STYLE A, PER MF SPEC. PS-4									
350	74884	NAMEPLATE "INITIATE SELECTOR"	St					1.0000	ea	WH	N
		Item Text: STYLE A, PER MF SPEC. PS-4									
360	74885	NAMEPLATE "BACKWASH INITIATE"	St					1.0000	ea	WH	N

Project : 310036 NASA JPL, Pasadena, CA
BOM Pos.: 0 - 9999
Customer: I00210 USF/Envirex

I/C TM-350A w/tritons

Status : Active
Start Date: 03-09-04
End Dt :

Pos.	Item Code	Description	Item Type	Length in]	Width [in]	No.of Units	Net Quantity	Un.	Scrap [%]	Wrh	Opr.	Ph.	Extra Info
Manufactured Item:	**3100368031**	**PANEL ASSY CONTROL TM 350A**											**BOM Unit: 1 ea**
		SEE DRAWING 3100368031											
		Item Text NAMEPLATE "BACKWASH INITIATE" STYLE A, PER MF SPEC. PS-4											
370	74886	NAMEPLATE "UNIT #1 CONTROL"	Cu				1.0000	ea		WH		N	
		Item Text STYLE A, PER MF SPEC. PS-4											
380	74358	NAMEPLATE "TRI-MITE"	St				1.0000	ea		WH		N	
		Item Text NAMEPLATE, "TRI-MITE", PER MF SPEC PS-4 STYLE M											
390	6009020	LABEL LARGE "USFILTER"	St				1.0000	ea		WH		N	
		Item Text LABEL LARGE MEMCOR USFILTER Exp descr: Large US Filter/Memcor logo label Size: (HxW) 3 IN x 13 IN Material: Vinyl, White with blue logo Addl.Info: Blue to be PMS 286 "USFilter Memcor,Microfloc,General Filter Products"											
400	74891	MODULE OUTPUT DISCRETE DL305 8	Cu				1.0000	ea		WH		N	
		Item Text 8 PT SINKING 5-24 VDC OUTPUT, AUTOMATIONDIRECT.COM # D3-08TD-1 (MANUAL LITERATURE REQUIRED)											
410	124159	MODULE INPUT ANALOG DL305 8CH	Cu				1.0000	ea		WH		N	
		Item Text MODULE INPUT ANALOG DL305 8CH, 4-20mA CURRENT INPUTS, 12 BIT RESOLUTION, KOYO # F3-08AD-1 (MANUAL LITERATURE REQUIRED)											
430	288010235	BARRIER END ENTRELEC 118368.16	St				2.0000	ea		IA		N	
		Item Text BARRIER END ENTRELEC 118368.16 Manufacturer: Entrelec											

Project : 310036 NASA JPL, Pasadena, CA I/C TM-350A w/tritons Status : Active
BOM Pos.: 0 - 9999 Start Date: 03-09-04
Customer: I00210 USF/Envirex End Dt :

Manufactured Item: 3100368031 **PANEL ASSY CONTROL TM 350A** **BOM Unit: 1 ea**

Mfr Part No.: # 118 368.16
Exp Descrip.: Block, end section, type FEM6

Pos.	Item Code	Description	Item Type	Length in]	Width [in]	No.of Units	Net Quantity	Un.	Scrap [%]	Wrh	Opr.	Ph.	Extra Info
440	77526	BLOCK TERM FUSIBLE	St				1.0000	ea		VMW		N	
	Item Text: FUSIBLE TERMINAL BLOCK FOR 1/4 x 1-1/4 FUSE, ML10/13SF, 22-10 GA-600V-25 AMPS-ENTRELEC # 199 095.13 (COMPRESSION CLAMP)												
450	1000754	FUSE 2A BUSS MDA-2 250V	St				1.0000	ea		WH		N	
	Item Text: Fuse, 2 amp, Slo-Blo, 250V. max., size 1/4" x 1 1/4", long, Buss # MDA-2 Alternate: LITTEFUSE # 326002												
600	73660	WRAP SPIRAL NATURAL 0.25OD PE	St				0.0000	ft		IA		N	
	Item Text: SPIRAL WRAP NATURAL 0.25OD PE PANDUIT # T25F												
610	288010234	MARKERS TERM ENTRELEC	St				1.0000	ea		VMW		N	
620	I000006	DECAL CAUTION-THIS DEVICE POWE	St				1.0000	ea		VMW		N	
	Item Text: Decal, "CAUTION-This device powered from several sources...", black letters on yellow, 3 1/2" x 5", EMED # QS3294												
630	I000002	DECAL 120 VOLTS 4x1	St				1.0000	ea		VMW		N	
	Item Text: Decal, "120 VOLTS", black letters on orange, 4 3/8" x 1 1/8", EMED # EM139-SA												
640	288010241	TERM GRND ENTRELEC 165 113.16	St				4.0000	ea		IA		N	
	Item Text: TERM GROUND ENTRELEC MANUFACTURER: ENTRELEC												

Project : 310036 NASA JPL, Pasadena, CA
BOM Pos.: 0 - 9999
Customer: I00210 USF/Envirex

I/C TM-350A w/tritons

Status : Active
Start Date: 03-09-04
End Dt :

Manufactured Item: 3100368031 **PANEL ASSY CONTROL TM 350A** **BOM Unit: 1 ea**

MFR PT NO: 165 113.16
DESCRIPTION: GROUND TERMINALS

Pos.	Item Code	Description	Item Type	Length in]	Width [in]	No.of Units	Net Quantity	Un.	Scrap [%]	Wrh	Opr.	Ph.	Extra Info
650	73661	CAP OPERATING LEVER BLK	St				2.0000	ea		VMW		N	

Item Text
OPERATING CAP, LEVER, BLACK, CUTLER-HAMMER # 10250T-LB

670	74903	CONVERTER POTENTIOMETER TO	St				1.0000	ea		WH		N	

Item Text
CONVERTER POTENTIOMETER TO,
CURRENT,
4-20 MA OUTPUT AND 115VAC POWER
ACTION INSTRUMENTS MODEL AP4003-181
(MANUAL LITERATURE REQUIRED)

730	74907	POTENTIOMETER 1K OHM 2WATT	St				1.0000	ea		WH		N	

Item Text
POTENTIOMETER 1K OHM 2 WATT BOURNES # 3852A-162 OR EQUAL
6/6/03, PN 3852A162102A

740	74908	KNOB 0.25DIA SHAFT 0.75DIA BLK	St				1.0000	ea		WH		N	

Item Text
KNOB 0.25 DIA SHAFT 0.75 DIA. BLACK
CLAROSTAT TYPE JD-75-4-5
NEWARK ELEC. PART NO. MC0617005
SUBSTITUTE: 664-1554

750	73903	SOCKET SURFACE MT OCTAL	St				2.0000	ea		WH		N	

Item Text
Surface mount octal socket, 8 PIN, EAGLE SIGNAL # 60SR2P06

760	97139	CONTROLLER PID DIGITAL 4-20mA	Cu				1.0000	ea		WH		N	

Item Text
CONTROLLER PID DIGITAL 4-20mA,
4-20 mA INPUT AND OUTPUT-115VAC POWER-
1/16 DIN ENCLOSURE
FUJI # PXW4-BFY1-4V (INSTRUCTION MANUALS REQUIRED)

10/15/03 PN: PXWY-BFY2-4V.

Project : 310036 NASA JPL, Pasadena, CA
BOM Pos.: 0 - 9999
Customer: I00210 USF/Envirex

I/C TM-350A w/tritons

Status : Active
Start Date: 03-09-04
End Dt :

Manufactured Item: 3100368031 **PANEL ASSY CONTROL TM 350A** **BOM Unit: 1 ea**

SEE DRAWING 3100368031

Pos.	Item Code	Description	Item Type	Length in]	Width [in]	No.of Units	Net Quantity	Un.	Scrap [%]	Wrh	Opr.	Ph.	Extra Info
770	82263	CLIP RETAINING FOR AP SERIES	Cu				2.0000	ea		WH		N	
	Item Text: HOUSINGS, ACTION # M801 RETAINING CLIP FOR AP SERIES												
790	74894	NAMEPLATE "FILTER #1 LEVEL	Cu				1.0000	ea		WH		Y	
	Item Text: CONTROLLER" STYLE F, PER MF SPEC. PS-4												
800	74909	NAMEPLATE "VALVE POSITION IN	Cu				1.0000	ea		WH		Y	
	Item Text: DRAINDOWN" STYLE A, PER MF SPEC. PS-4												
830	77526	BLOCK TERM FUSIBLE	St				1.0000	ea		VMW		N	
	Item Text: FUSIBLE TERMINAL BLOCK FOR 1/4 x 1-1/4 FUSE, ML10/13SF, 22-10 GA-600V-25 AMPS-ENTRELEC # 199 095.13 (COMPRESSION CLAMP)												
840	91279	FUSE 1A NTIME 1/4x1-1/4	St				1.0000	ea		VMW		N	
	Item Text: FUSE, 1 AMP, NORMAL BLOW, 0.25" x 1.25" SIZE, BUSSMAN # AGC-1												
850	115258	FUSE 0.0625A DUAL 1/4x1-1/4	St				1.0000	ea		WH		N	
	Item Text: FUSE, 0.0625A, DUAL ELEMENT, 0.25" x 1.25", BUSSMAN # MDL-1/16 ALTERNATE: SHAWMUT GDL116												
860	91277	BLOCK TERM FUSIBLE	St				1.0000	ea		VMW		N	
	Item Text: BLOCK TERMINAL FUSIBLE FOR .25 X 1.25 INCH FUSE- 22-10 GA-600V-25 AMPS- TYPE ML10/13.SFD-24VDC INDICATING- ENTRELEC # 199 166.26												

870	77521	BLOCK END SECTION TYPE FEM13	St					2.0000	ea	VMW	N

Item Text
BLOCK END SECTION TYPE FEM13 ENTRELEC # 118 503.27

880	91280	POWER SUPPLY SWITCH 115AC-24DC	Cu					1.0000	ea	WH	N

Item Text
POWER SUPPLY, SWITCHING TYPE, 115VAC SUPPLY, 24VDC @
1AMP OUTPUT, ENTRELEC # 2 423 418.00

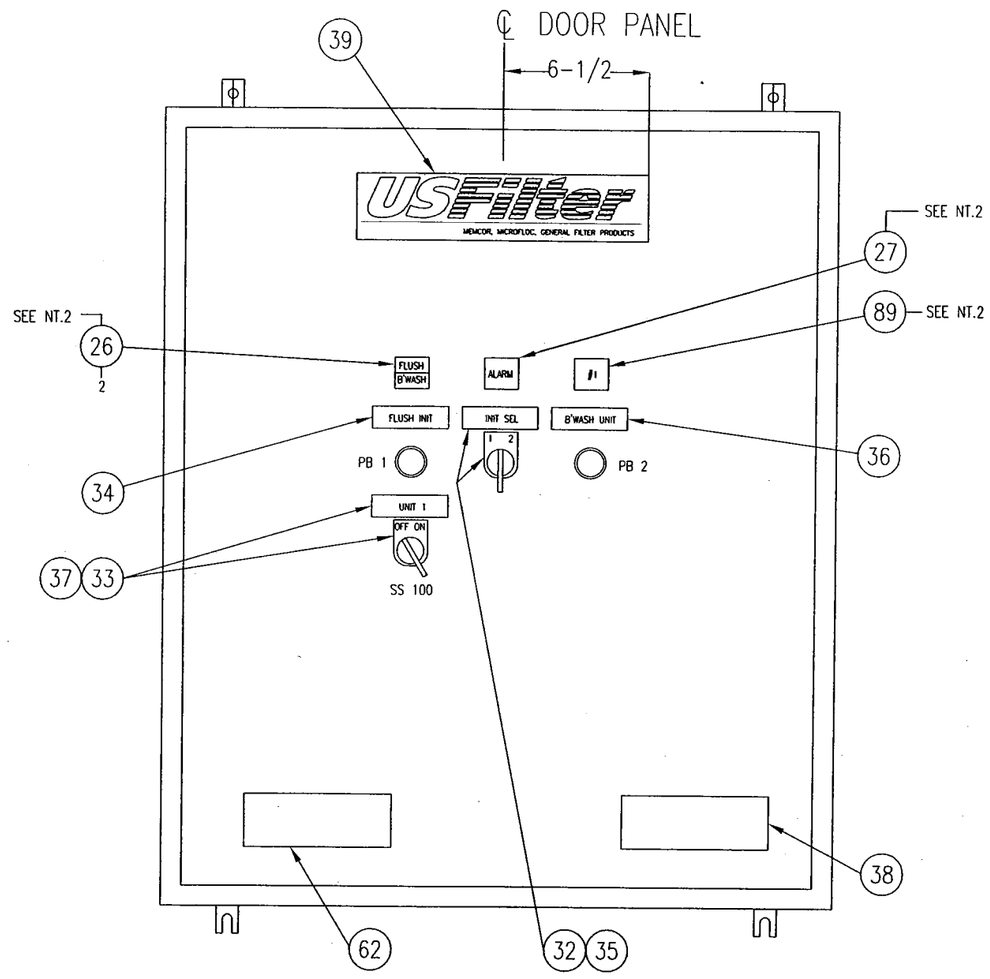

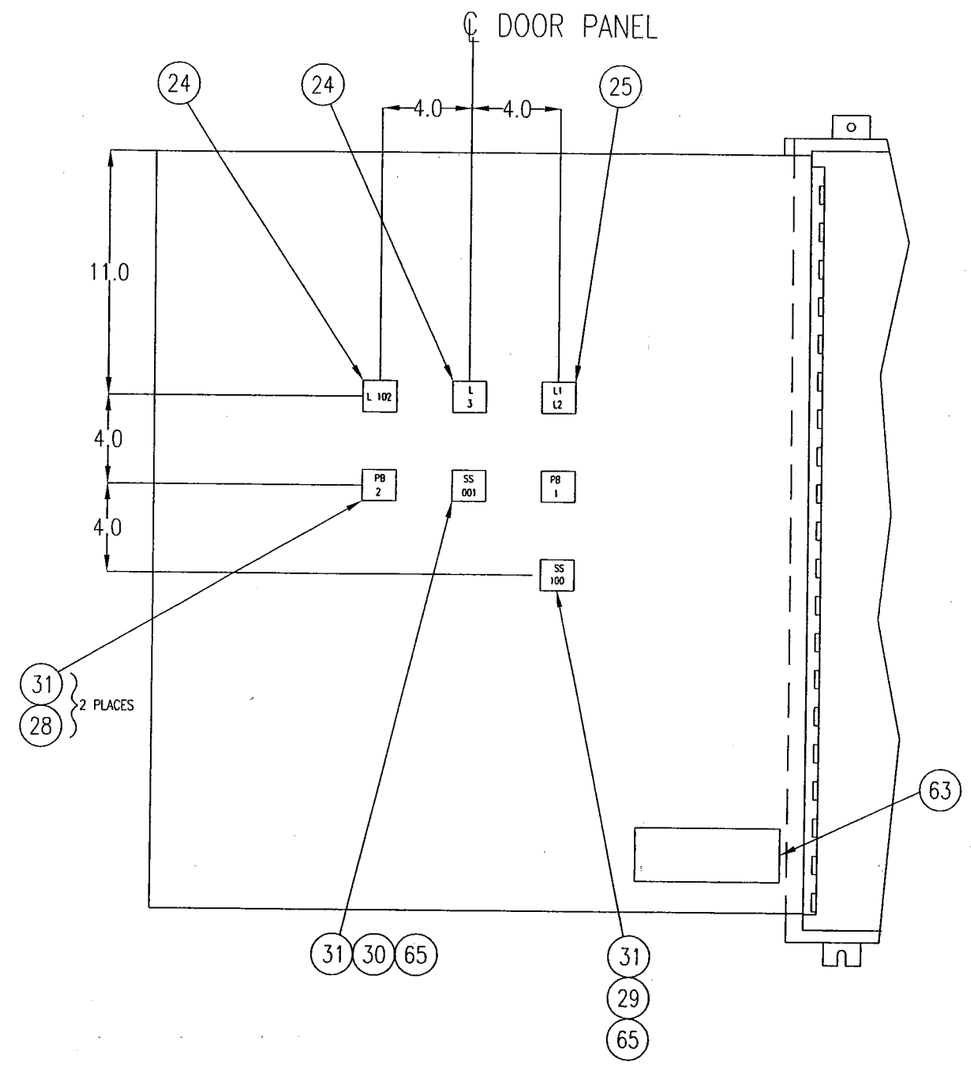

NOTES:

1. RELAYS FOR UNIT 1 TO BE INSTALLED WITH COIL TERMINALS FACING TO LEFT, FOR UNIT 2 - FACE TO RIGHT
2. COLOR INSERTS TO BE LABELLED AS FOLLOWS USING HEAT PERMATIZED LETTERS:

LIGHT NUMBER	INSERT COLOR	ITEM NUMBER	LOCATION
L1	AMBER	48	TOP
L2	AMBER	49	BOTTOM
L3	RED	50	CENTER
L102	GREEN	51	TOP
L103	GREEN	54	BOTTOM

3. PANEL WIRING PER PS-2 EXCEPT WIRE TO BE 16 GA. THHN STRANDED
4. PANEL FINISH PER FS-56 EXTERIOR ONLY
5. SWITCH AND LIGHT CUTOUT PER STANDARD CUTOUT "B", SPEC PS-3
6. PLACE 4-20ma JUMPERS ON PINS FOR THE ANALOG INPUT MODULE

REFERENCE DRAWINGS
3100364021 ELECTRICAL SCHEMATIC
3100364022 ELECTRICAL ONE-LINE DIAGRAM
3100364023 INSTRUMENT LOOP DIAGRAM

REV	DESCRIPTION	DATE	DWN	CHKD	APVD	ECN
2	SHEET 2: ADDED RELAYS CR-1, CR-2, CR-3.	05/06/04	SJT	-	-	-

COMPANY CONFIDENTIAL
THIS DOCUMENT AND ALL INFORMATION CONTAINED HEREIN ARE THE PROPERTY OF THE USFILTER AND/OR ITS AFFILIATES ("USF"). THE DESIGN CONCEPTS AND INFORMATION CONTAINED HEREIN ARE PROPRIETARY TO USF AND ARE SUBMITTED IN CONFIDENCE. THEY ARE NOT TRANSFERABLE AND MUST BE USED ONLY FOR THE PURPOSE FOR WHICH THE DOCUMENT IS EXPRESSLY LOANED. THEY MUST NOT BE DISCLOSED, REPRODUCED, LOANED OR USED IN ANY OTHER MANNER WITHOUT THE EXPRESS WRITTEN CONSENT OF USF. IN NO EVENT SHALL THEY BE USED IN ANY MANNER DETRIMENTAL TO THE INTEREST OF USF. ALL PATENT RIGHTS ARE RESERVED. UPON THE DEMAND OF USF, THIS DOCUMENT, ALONG WITH ALL COPIES AND EXTRACTS, AND ALL RELATED NOTES AND ANALYSES, MUST BE RETURNED TO USF OR DESTROYED, AS INSTRUCTED BY USF. ACCEPTANCE OF THE DELIVERY OF THIS DOCUMENT CONSTITUTES AGREEMENT TO THESE TERMS AND CONDITIONS.

DESIGNER	DATE
CHECKER	DATE
ENGINEER SJT	DATE 04/01/04
MANAGER	DATE -
FILE: K0A-13	
SCALE: NTS	

TITLE CONTROL PANEL ASSEMBLY
TRI-MITE TM-350A

CLIENT NASA JPL
PASADENA, CA

USFilter
441 MAIN STREET
STURBRIDGE, MA 01562
TEL: 1-800-636-2674

PROJECT	CODE	DRAWING	SHEET	REV
310036		3100368031	1 OF 2	2

BAR = 1" AT PLOT SCALE
INTL REF:
STD: 2-0600-11X17B

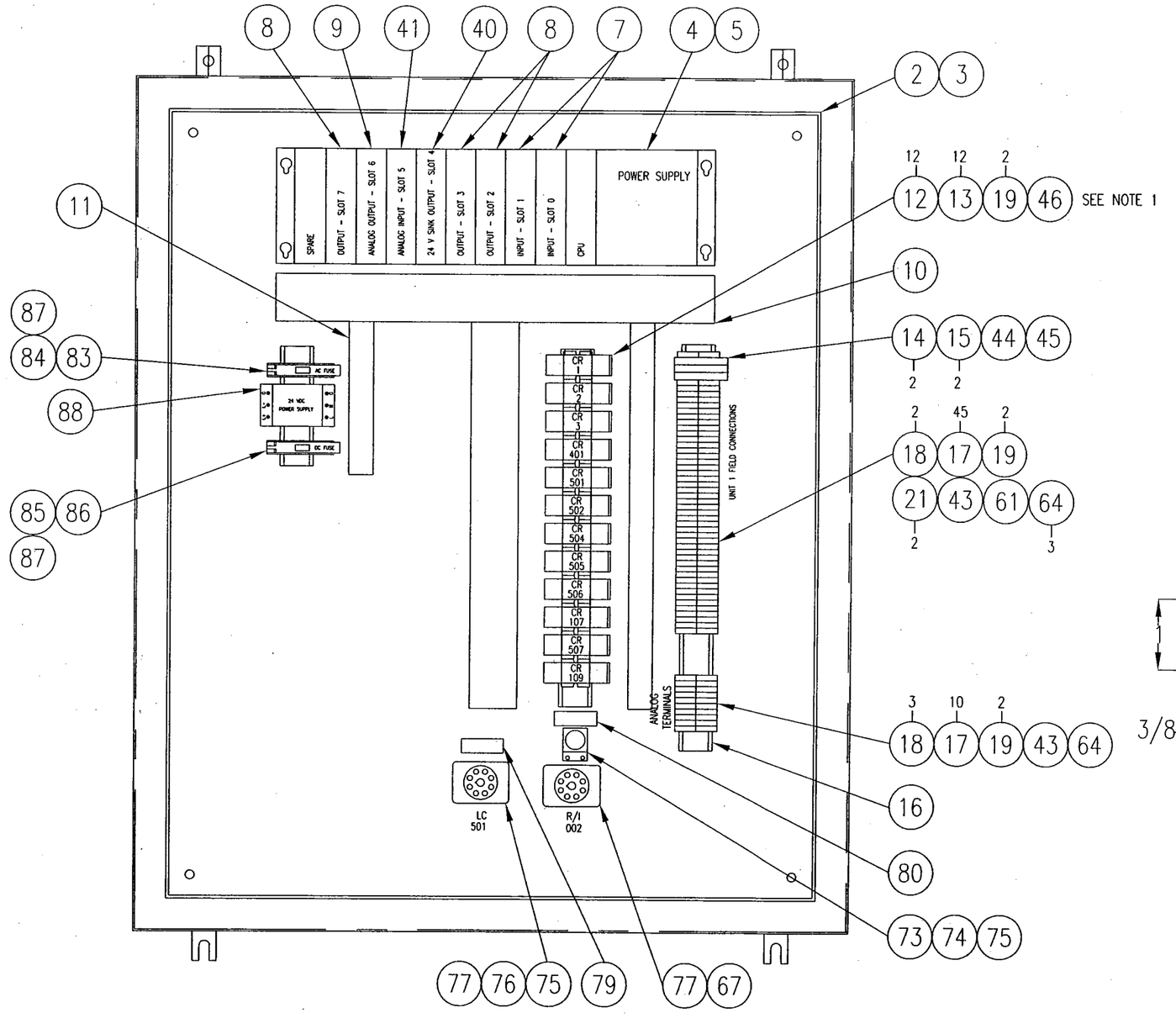

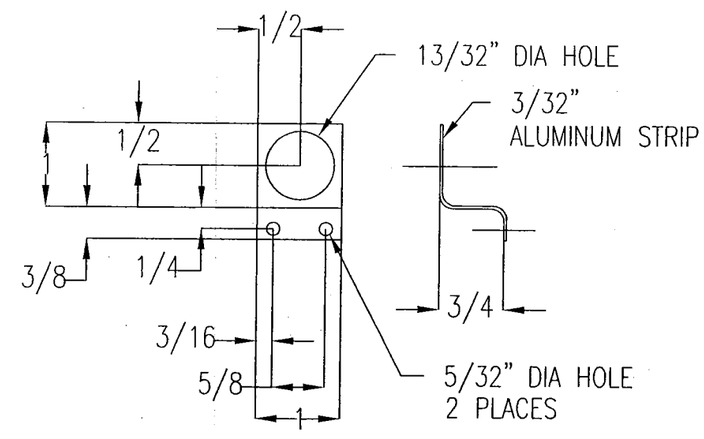

POTENTIOMETER MOUNTING BRACKET
(FABRICATE DURING ASSEMBLY)

BAR = 1" AT PLOT SCALE

INTL REF:

STD: 2-0600-11X17B

REV	DESCRIPTION	DATE	DWN	CHKD	APVD	ECN
2	SEE SHEET 1	05/06/04	SJT	-	-	-

COMPANY CONFIDENTIAL
THIS DOCUMENT AND ALL INFORMATION CONTAINED HEREIN ARE THE PROPERTY OF THE USFILTER AND/OR ITS AFFILIATES ("USF"). THE DESIGN CONCEPTS AND INFORMATION CONTAINED HEREIN ARE PROPRIETARY TO USF AND ARE SUBMITTED IN CONFIDENCE. THEY ARE NOT TRANSFERABLE AND MUST BE USED ONLY FOR THE PURPOSE FOR WHICH THE DOCUMENT IS EXPRESSLY LOANED. THEY MUST NOT BE DISCLOSED, REPRODUCED, LOANED OR USED IN ANY OTHER MANNER WITHOUT THE EXPRESS WRITTEN CONSENT OF USF. IN NO EVENT SHALL THEY BE USED IN ANY MANNER DETRIMENTAL TO THE INTEREST OF USF. ALL PATENT RIGHTS ARE RESERVED. UPON THE DEMAND OF USF, THIS DOCUMENT, ALONG WITH ALL COPIES AND EXTRACTS, AND ALL RELATED NOTES AND ANALYSES, MUST BE RETURNED TO USF OR DESTROYED, AS INSTRUCTED BY USF. ACCEPTANCE OF THE DELIVERY OF THIS DOCUMENT CONSTITUTES AGREEMENT TO THESE TERMS AND CONDITIONS.

DESIGNER	DATE
CHECKER	DATE
ENGINEER SJT	DATE 04/01/04
MANAGER	DATE -
FILE: K0A-13	
SCALE: NTS	

TITLE: CONTROL PANEL ASSEMBLY
TRI-MITE TM-350A

CLIENT: NASA JPL
PASADENA, CA

USFilter
441 MAIN STREET
STURBRIDGE, MA 01562
TEL: 1-800-636-2674

PROJECT	CODE	DRAWING	SHEET	REV
310036		3100368031	2 OF 2	2

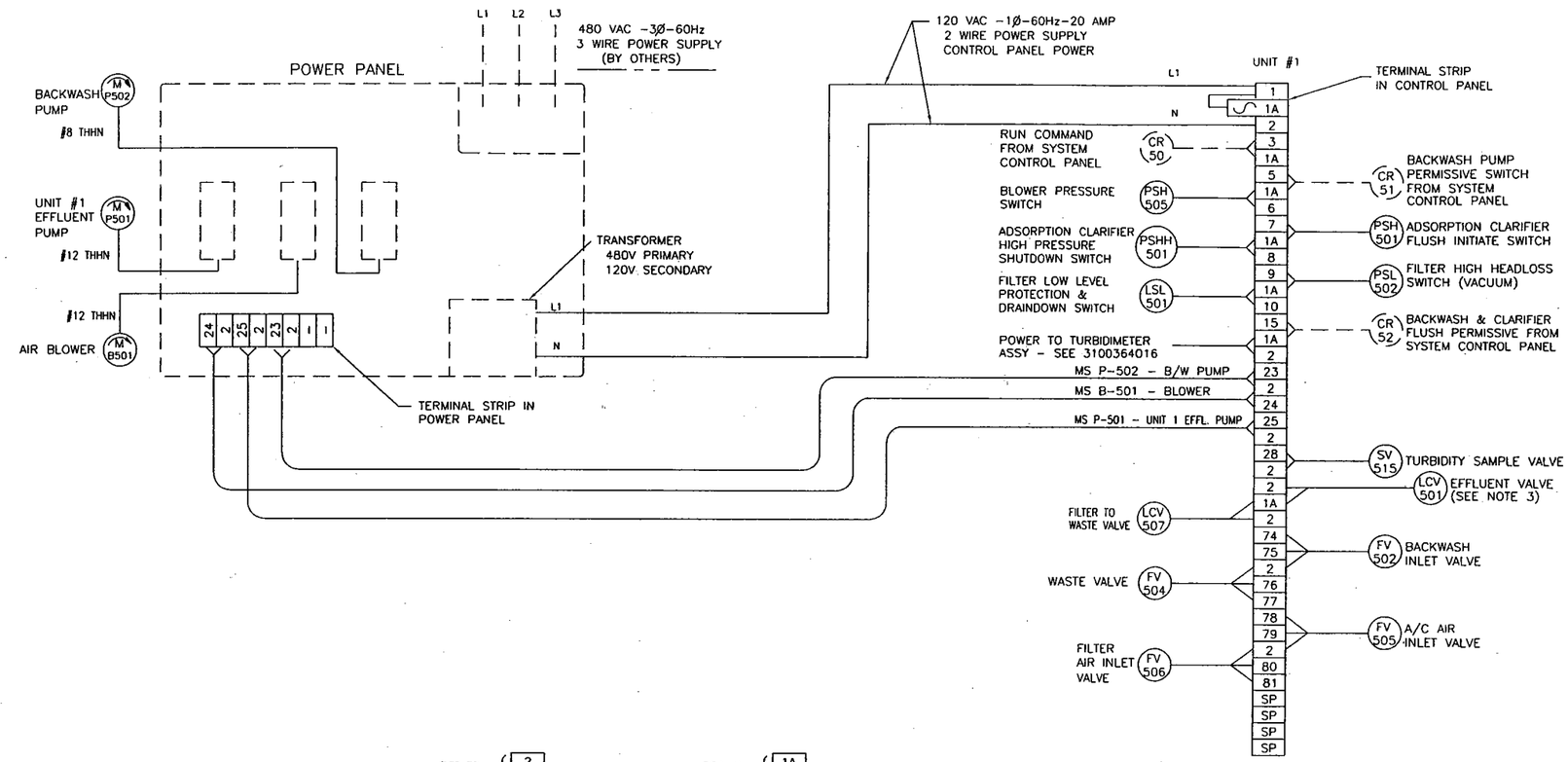

NOTES:

1. GROUP ALL #1 TERMINALS TOGETHER, GROUP ALL #2 TERMINALS TOGETHER, CONNECT LIKE TERMINALS WITH JUMPER BAR ASSEMBLIES PUT TERMINAL #3 BETWEEN #1'S AND #2'S.
2. SOLID LINE: FACTORY WIRING BY U. S. FILTER.
   DOTTED LINE: FIELD WIRING BY INSTALLING CONTRACTOR
3. SEE DRAWING 3100367123 FOR 4-20 mA SIGNALS TO EFFLUENT AND FILTER TO WASTE VALVES.

REV	DESCRIPTION	DATE	DWN	CHKD	APVD	ECN
4	ADDED TURBIDIMETER POWER SUPPLY CIRCUIT BREAKER	05/25/04	SJT	–	–	–
3	REVISED DRAWINGS PER USF MEMCOR/ENVIROX/SHAW CONFERENCE	05/20/04	SJT	–	–	–
2	REVISED TAG NUMBERS TO MATCH PROJECT LIST.	05/06/04	SJT	–	–	–

COMPANY CONFIDENTIAL
THIS DOCUMENT AND ALL INFORMATION CONTAINED HEREIN ARE THE PROPERTY OF THE USFILTER AND/OR ITS AFFILIATES ("USF"). THE DESIGN CONCEPTS AND INFORMATION CONTAINED HEREIN ARE PROPRIETARY TO USF AND ARE SUBMITTED IN CONFIDENCE. THEY ARE NOT TRANSFERABLE AND MUST BE USED ONLY FOR THE PURPOSE FOR WHICH THE DOCUMENT IS EXPRESSLY LOANED. THEY MUST NOT BE DISCLOSED, REPRODUCED, LOANED OR USED IN ANY OTHER MANNER WITHOUT THE EXPRESS WRITTEN CONSENT OF USF. IN NO EVENT SHALL THEY BE USED IN ANY MANNER DETRIMENTAL TO THE INTEREST OF USF. ALL PATENT RIGHTS ARE RESERVED. UPON THE DEMAND OF USF, THIS DOCUMENT, ALONG WITH ALL COPIES AND EXTRACTS, AND ALL RELATED NOTES AND ANALYSES, MUST BE RETURNED TO USF OR DESTROYED, AS INSTRUCTED BY USF. ACCEPTANCE OF THE DELIVERY OF THIS DOCUMENT CONSTITUTES AGREEMENT TO THESE TERMS AND CONDITIONS.

DESIGNER		DATE
CHECKER		DATE
ENGINEER	SJT	DATE 04/01/04
MANAGER		DATE –
FILE: KOE-5		
SCALE: NTS		

TITLE ELECTRICAL ONE-LINE DIAGRAM
TRI-MITE TM-350A

CLIENT NASA JPL
PASADENA, CA

USFilter
441 MAIN STREET
STURBRIDGE, MA 01562
TEL: 1-800-636-2674

PROJECT	CODE	DRAWING	SHEET	REV
310036		3100367122	1 OF 1	4

BAR = 1" AT PLOT SCALE
INTL REF:
STD: 2-0600-11X17B

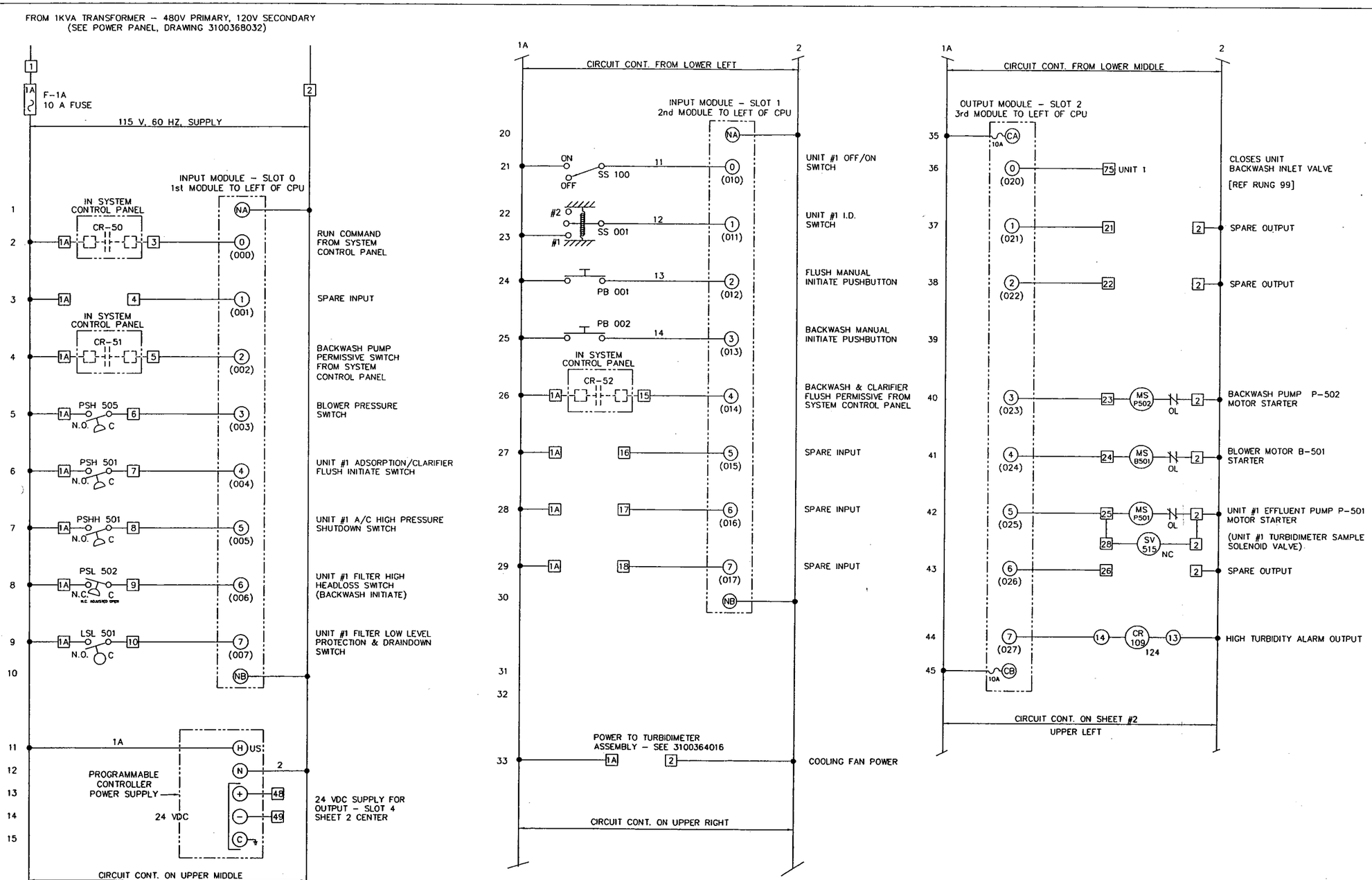

REV	DESCRIPTION	DATE	DWN	CHKD	APVD	ECN
3	REVISED DRAWINGS PER USF MEMCOR/ENVIROX/SHAW CONFERENCE	05/20/04	SJT	–	–	–
2	REVISED TAG NUMBERS TO MATCH PROJECT LIST.	05/06/04	SJT	–	–	–

COMPANY CONFIDENTIAL
THIS DOCUMENT AND ALL INFORMATION CONTAINED HEREIN ARE THE PROPERTY OF THE USFILTER AND/OR ITS AFFILIATES ("USF"). THE DESIGN CONCEPTS AND INFORMATION CONTAINED HEREIN ARE PROPRIETARY TO USF AND ARE SUBMITTED IN CONFIDENCE. THEY ARE NOT TRANSFERABLE AND MUST BE USED ONLY FOR THE PURPOSE FOR WHICH THE DOCUMENT IS EXPRESSLY LOANED. THEY MUST NOT BE DISCLOSED, REPRODUCED, LOANED OR USED IN ANY OTHER MANNER WITHOUT THE EXPRESS WRITTEN CONSENT OF USF. IN NO EVENT SHALL THEY BE USED IN ANY MANNER DETRIMENTAL TO THE INTEREST OF USF. ALL PATENT RIGHTS ARE RESERVED. UPON THE DEMAND OF USF, THIS DOCUMENT, ALONG WITH ALL COPIES AND EXTRACTS, AND ALL RELATED NOTES AND ANALYSES, MUST BE RETURNED TO USF OR DESTROYED, AS INSTRUCTED BY USF. ACCEPTANCE OF THE DELIVERY OF THIS DOCUMENT CONSTITUTES AGREEMENT TO THESE TERMS AND CONDITIONS.

DESIGNER	DATE	
CHECKER	DATE	
ENGINEER SJT	DATE 04/01/04	
MANAGER	DATE –	
FILE: KOE-4		
SCALE: NTS		

TITLE ELECTRICAL SCHEMATIC
TRI-MITE TM-350A

CLIENT NASA JPL
PASADENA, CA

USFilter
441 MAIN STREET
STURBRIDGE, MA 01562
TEL: 1-800-636-2674

PROJECT	CODE	DRAWING	SHEET	REV
310036		3100367121	1 OF 2	3

BAR = 1" AT PLOT SCALE
INTL REF:
STD: 2-0600-11X17B

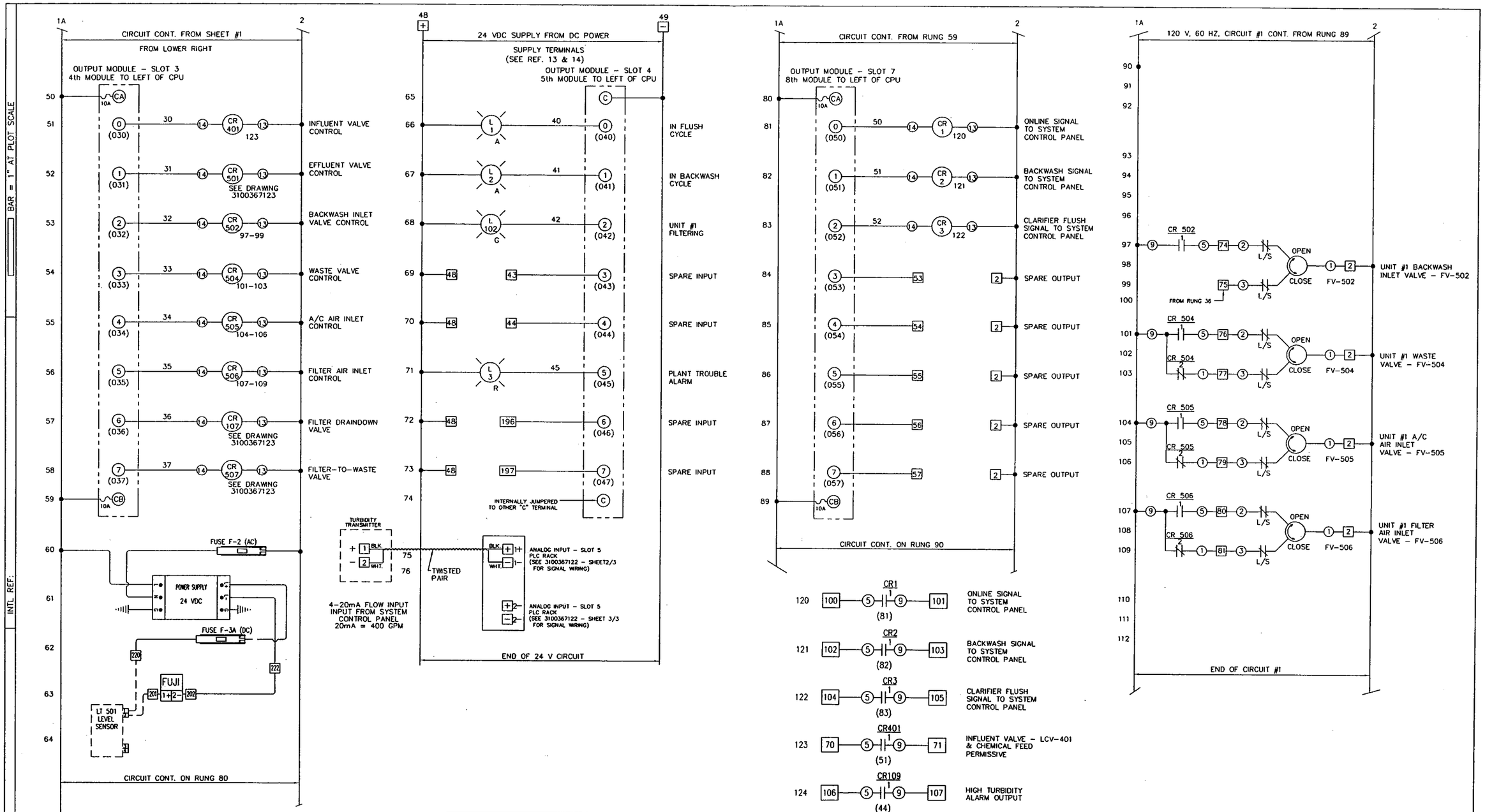

REV	DESCRIPTION	DATE	DWN	CHKD	APVD	ECN
3	SEE SHEET 1					
2	SEE SHEET 1					

COMPANY CONFIDENTIAL
THIS DOCUMENT AND ALL INFORMATION CONTAINED HEREIN ARE THE PROPERTY OF THE USFILTER AND/OR ITS AFFILIATES ("USF"). THE DESIGN CONCEPTS AND INFORMATION CONTAINED HEREIN ARE PROPRIETARY TO USF AND ARE SUBMITTED IN CONFIDENCE. THEY ARE NOT TRANSFERABLE AND MUST BE USED ONLY FOR THE PURPOSE FOR WHICH THE DOCUMENT IS EXPRESSLY LOANED. THEY MUST NOT BE DISCLOSED, REPRODUCED, LOANED OR USED IN ANY OTHER MANNER WITHOUT THE EXPRESS WRITTEN CONSENT OF USF. IN NO EVENT SHALL THEY BE USED IN ANY MANNER DETRIMENTAL TO THE INTEREST OF USF. ALL PATENT RIGHTS ARE RESERVED. UPON THE DEMAND OF USF, THIS DOCUMENT, ALONG WITH ALL COPIES AND EXTRACTS, AND ALL RELATED NOTES AND ANALYSES, MUST BE RETURNED TO USF OR DESTROYED, AS INSTRUCTED BY USF. ACCEPTANCE OF THE DELIVERY OF THIS DOCUMENT CONSTITUTES AGREEMENT TO THESE TERMS AND CONDITIONS.

DESIGNER	DATE	
CHECKER	DATE	
ENGINEER	DATE	SJT 04/01/04
MANAGER	DATE	-
FILE:	KOE-4	
SCALE:	NTS	

TITLE ELECTRICAL SCHEMATIC
TRI-MITE TM-350A

CLIENT NASA JPL
PASADENA, CA

USFilter
441 MAIN STREET
STURBRIDGE, MA 01562
TEL: 1-800-636-2674

PROJECT	CODE	DRAWING	SHEET	REV
310036		3100367121	2 OF 2	3

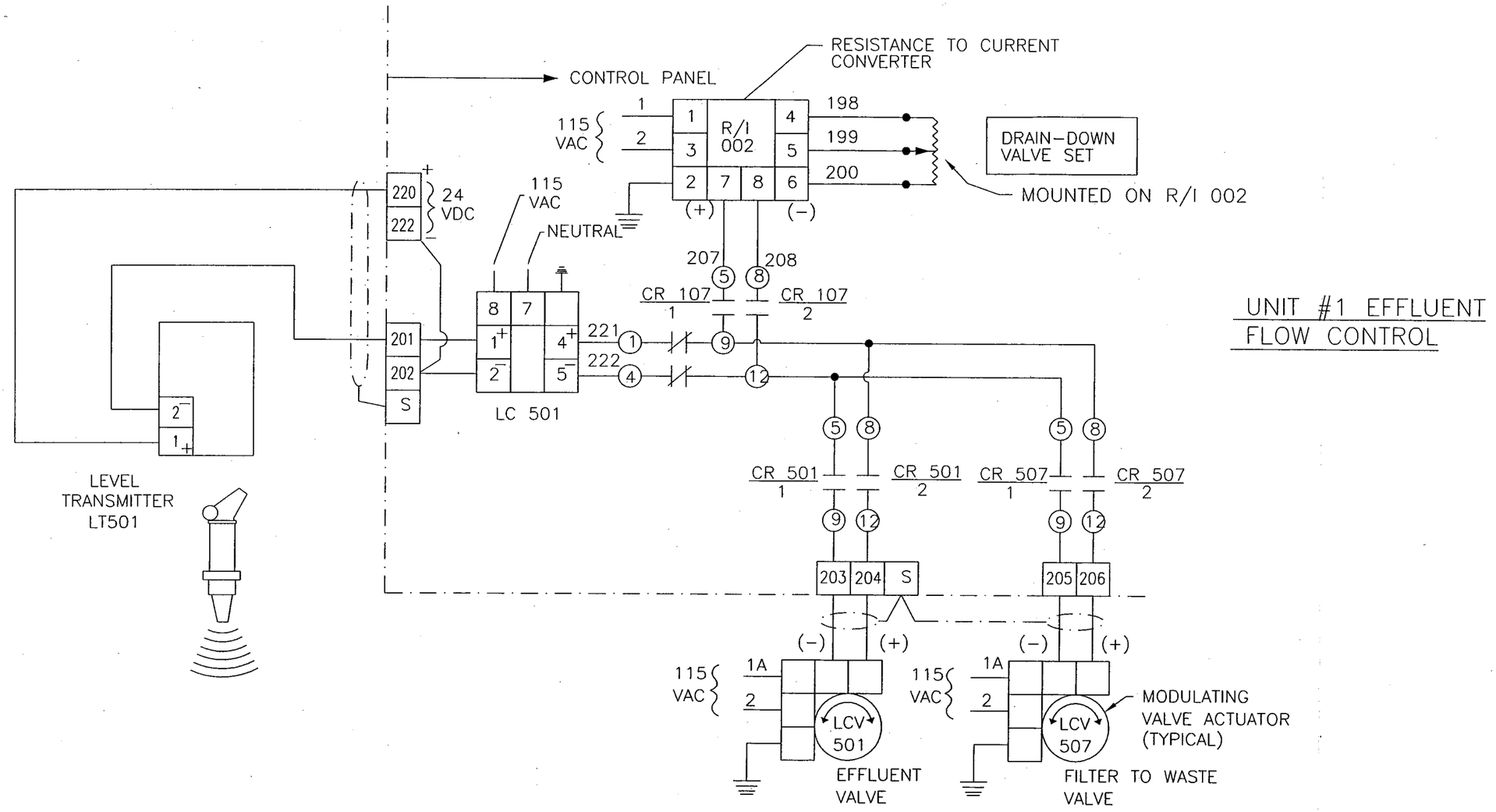

UNIT #1 EFFLUENT FLOW CONTROL

REV	DESCRIPTION	DATE	DWN	CHKD	APVD	ECN
4	ADDED TURBIDIMETER POWER SUPPLY CIRCUIT BREAKER	05/25/04	SJT	–	–	–
3	REVISED DRAWINGS PER USF MEMCOR/ENVIROX/SHAW CONFERENCE	05/20/04	SJT	–	–	–
2	REVISED TAG NUMBERS TO MATCH PROJECT LIST.	05/06/04	SJT	–	–	–

COMPANY CONFIDENTIAL
THIS DOCUMENT AND ALL INFORMATION CONTAINED HEREIN ARE THE PROPERTY OF THE USFILTER AND/OR ITS AFFILIATES ("USF"). THE DESIGN CONCEPTS AND INFORMATION CONTAINED HEREIN ARE PROPRIETARY TO USF AND ARE SUBMITTED IN CONFIDENCE. THEY ARE NOT TRANSFERABLE AND MUST BE USED ONLY FOR THE PURPOSE FOR WHICH THE DOCUMENT IS EXPRESSLY LOANED. THEY MUST NOT BE DISCLOSED, REPRODUCED, LOANED OR USED IN ANY OTHER MANNER WITHOUT THE EXPRESS WRITTEN CONSENT OF USF. IN NO EVENT SHALL THEY BE USED IN ANY MANNER DETRIMENTAL TO THE INTEREST OF USF. ALL PATENT RIGHTS ARE RESERVED. UPON THE DEMAND OF USF, THIS DOCUMENT, ALONG WITH ALL COPIES AND EXTRACTS, AND ALL RELATED NOTES AND ANALYSES, MUST BE RETURNED TO USF OR DESTROYED, AS INSTRUCTED BY USF. ACCEPTANCE OF THE DELIVERY OF THIS DOCUMENT CONSTITUTES AGREEMENT TO THESE TERMS AND CONDITIONS.

DESIGNER	DATE
CHECKER	DATE
ENGINEER SJT	DATE 04/01/04
MANAGER	DATE –
FILE: KOE-6	
SCALE: NTS	

TITLE INSTRUMENT LOOP DIAGRAM
TRI-MITE TM-350A

CLIENT NASA JPL
PASADENA, CA

USFilter
441 MAIN STREET
STURBRIDGE, MA 01562
TEL: 1-800-636-2674

PROJECT	CODE	DRAWING	SHEET	REV
310036		3100367123	1 OF 3	4

BAR = 1" AT PLOT SCALE
INTL REF:
STD: 2-0600-11X17B

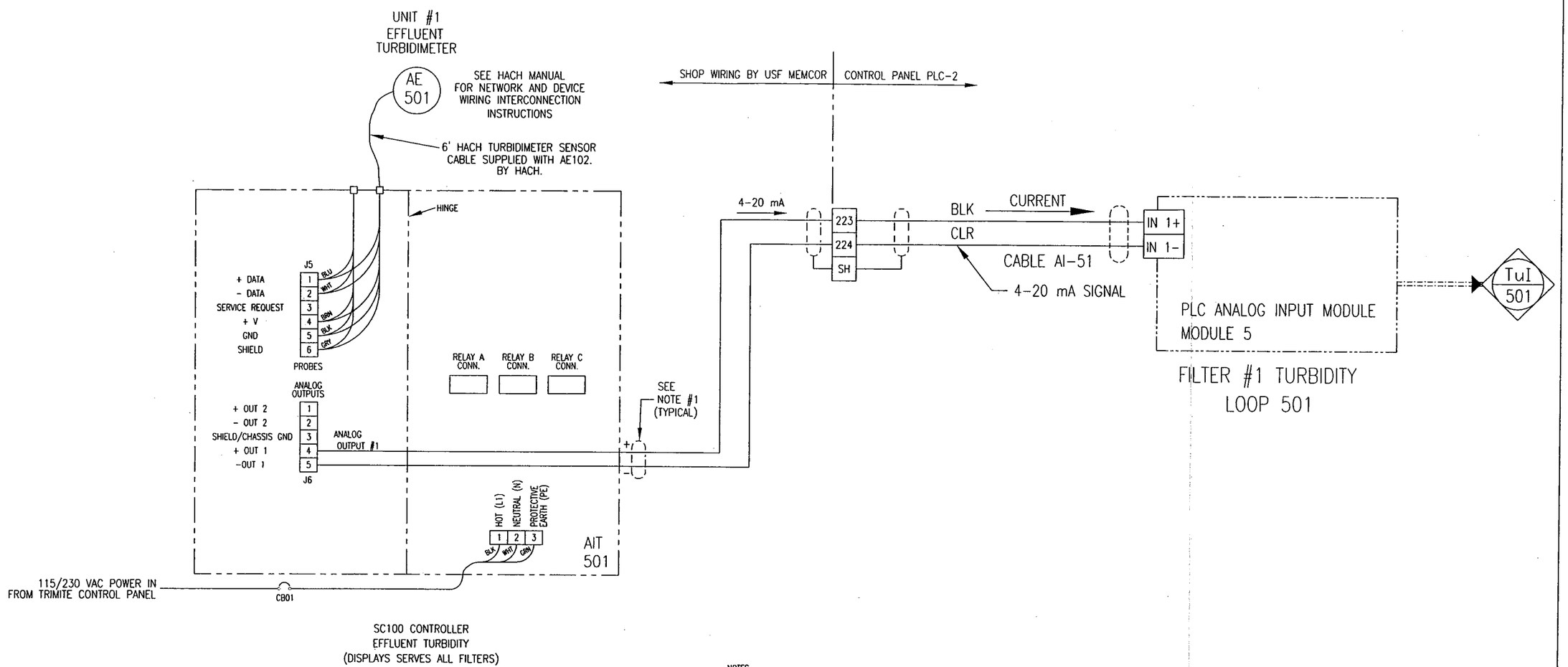

SC100 CONTROLLER
EFFLUENT TURBIDITY
(DISPLAYS SERVES ALL FILTERS)

CALIBRATED 0-1.000 NTU = 4-20mA

NOTES

1. (2)-#18 TWISTED PAIR W/ SHIELD
   (CONNECT SHIELD AT ONE END OF CABLE ONLY)

LEGEND

AE ANALYZING ELEMENT
CR CONTROL RELAY

UNIT #1 EFFLUENT TURBIDITY

REV	DESCRIPTION	DATE	DWN	CHKD	APVD	ECN
4	SEE SHEET 1	-	-	-	-	-
3	SEE SHEET 1	-	-	-	-	-
2	SEE SHEET 1	-	-	-	-	-

COMPANY CONFIDENTIAL
ALL INFORMATION CONTAINED ON THIS DOCUMENT IS THE PROPERTY OF USFILTER AND/OR ITS AFFILIATES ("USF"). THE DESIGN CONCEPTS AND INFORMATION CONTAINED HEREIN ARE PROPRIETARY TO USF AND ARE SUBMITTED IN CONFIDENCE. THEY ARE NOT TRANSFERABLE AND MUST BE USED ONLY FOR THE PURPOSE FOR WHICH THE DOCUMENT IS EXPRESSLY SUBMITTED. THEY MUST NOT BE DISCLOSED, REPRODUCED, LOANED OR USED IN ANY OTHER MANNER WITHOUT THE EXPRESS WRITTEN CONSENT OF USF. USF ASSUMES NO RESPONSIBILITY OR LIABILITY FOR THE USE OF THIS DOCUMENT OR THE DESIGN CONCEPTS AND INFORMATION CONTAINED HEREIN FOR ANOTHER PROJECT, OR IN A MANNER THAT DOES NOT RELATE TO THE FITNESS OR PURPOSE OF THIS DOCUMENT. IN NO EVENT SHALL THIS DOCUMENT OR THE DESIGN CONCEPTS AND INFORMATION CONTAINED HEREIN BE USED IN ANY MANNER DETRIMENTAL TO THE INTEREST OF USF. ALL PATENT RIGHTS ARE RESERVED. ACCEPTANCE OF THE DELIVERY OF THIS DOCUMENT CONSTITUTES AGREEMENT TO THESE TERMS AND CONDITIONS.

DESIGNER	DATE
CHECKER	DATE
ENGINEER SJT	DATE 04/01/04
MANAGER	DATE -
FILE: K0E-6	
SCALE: NTS	

TITLE: INSTRUMENT LOOP DIAGRAM FOR 1720E TURB. TRI-MITE TM-350A

CLIENT: NASA JPL
PASADENA, CA

USFilter

BUSINESS CENTER - NAME
BUSINESS CENTER - CITY, STATE
BUSINESS CENTER - TEL

PROJECT	CODE	DRAWING	SHEET	REV
310036		3100367123	2 OF 3	4

BAR = 1" AT PLOT SCALE

INTL REF:

STD: 3-0600-11X17B

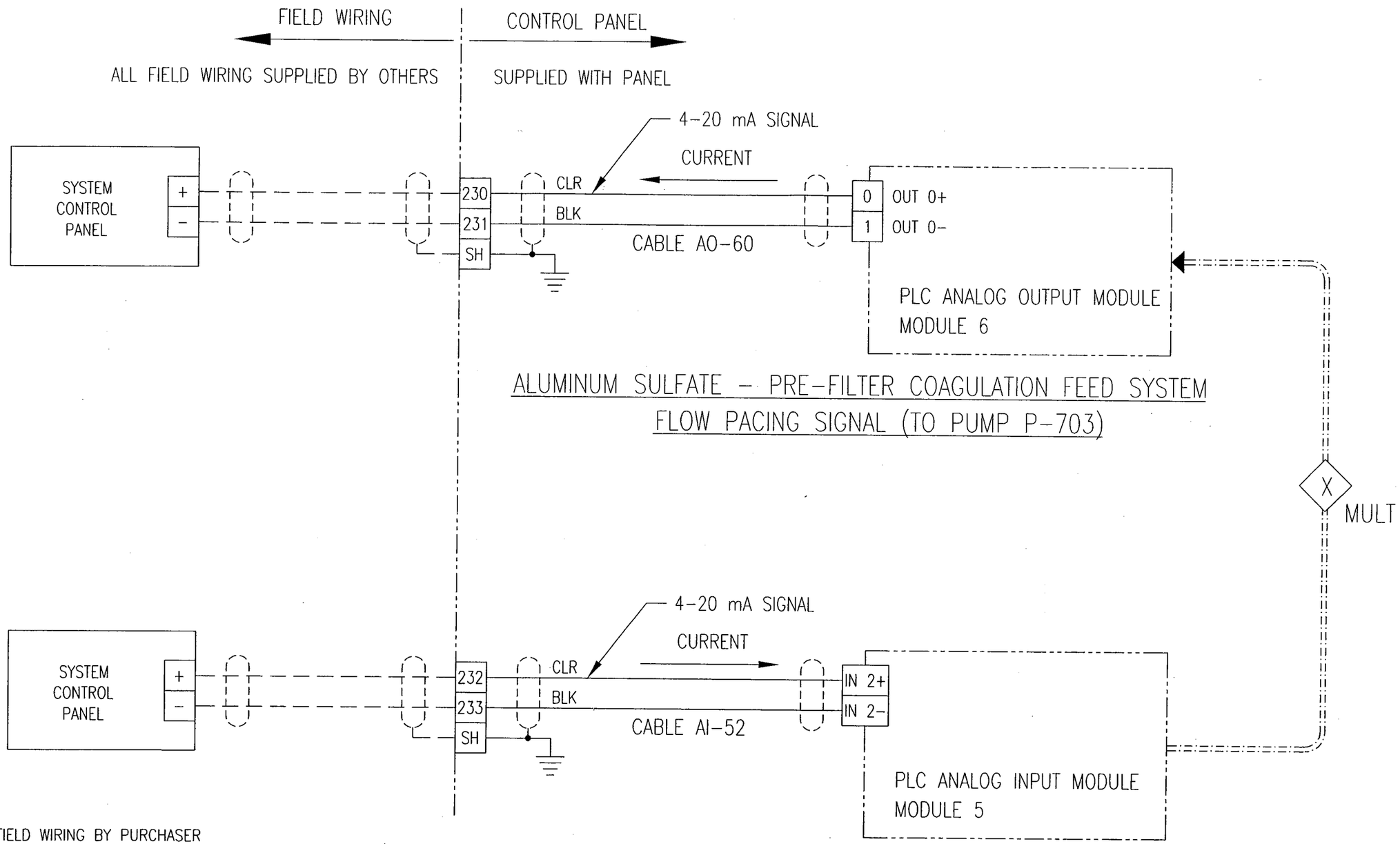

REV	DESCRIPTION	DATE	DWN	CHKD	APVD	ECN
4	SEE SHEET 1					
3	SEE SHEET 1					
2	SEE SHEET 1					

COMPANY CONFIDENTIAL
THIS DOCUMENT AND ALL INFORMATION CONTAINED HEREIN ARE THE PROPERTY OF THE USFILTER AND/OR ITS AFFILIATES ("USF"). THE DESIGN CONCEPTS AND INFORMATION CONTAINED HEREIN ARE PROPRIETARY TO USF AND ARE SUBMITTED IN CONFIDENCE. THEY ARE NOT TRANSFERABLE AND MUST BE USED ONLY FOR THE PURPOSE FOR WHICH THE DOCUMENT IS EXPRESSLY LOANED. THEY MUST NOT BE DISCLOSED, REPRODUCED, LOANED OR USED IN ANY OTHER MANNER WITHOUT THE EXPRESS WRITTEN CONSENT OF USF. IN NO EVENT SHALL THEY BE USED IN ANY MANNER DETRIMENTAL TO THE INTEREST OF USF. ALL PATENT RIGHTS ARE RESERVED. UPON THE DEMAND OF USF, THIS DOCUMENT, ALONG WITH ALL COPIES AND EXTRACTS, AND ALL RELATED NOTES AND ANALYSES, MUST BE RETURNED TO USF OR DESTROYED, AS INSTRUCTED BY USF. ACCEPTANCE OF THE DELIVERY OF THIS DOCUMENT CONSTITUTES AGREEMENT TO THESE TERMS AND CONDITIONS.

DESIGNER	DATE
CHECKER	DATE
ENGINEER SJT	DATE 04/01/04
MANAGER	DATE
FILE:	
SCALE: NTS	

TITLE LOOP DIAGRAM FOR ALUM PUMP CONTROL
TRI-MITE TM-350A

CLIENT NASA JPL
PASADENA, CA

USFilter
441 MAIN STREET
STURBRIDGE, MA 01562
TEL: 1-800-636-2674

PROJECT	CODE	DRAWING	SHEET	REV
310036		3100367123	3 OF 3	4

BAR = 1" AT PLOT SCALE
INTL REF:
STD: 2-0600-11X17B

INSTALLATION MANUAL

INSTALLATION AND ASSEMBLY INSTRUCTIONS

TRIMITE WATER SYSTEMS

NASA JPL, Pasadena, CA

TRIMITE MODEL: TM-350A

PROJECT NO. - 310036

4/13/04

UNITED STATES FILTER CORPORATION
CPC DIVISION
P.O. BOX 36
441 MAIN STREET
STURBRIDGE, MA. 01566
(508) 347-7344 PH
(508) 347-7049 FX

D. **Hypochlorite System Assembly (By Others)**

FINAL CHECK-OUT

A. **Check-Out**

B. **Building The Filter**

Only the items referenced in the Bills of Material for the drawings in the Drawing section of this Owners Manual are furnished by USF-CPC Corporation Products.

The Jobsite Superintendent should review these instructions before the arrival of the equipment. THIS REVIEW IS IMPORTANT. Installation should not be attempted without first understanding these instructions.

B. GENERAL INSTRUCTIONS

CAUTION: Be careful when installing equipment (and media*) to avoid damage to the paint. Any paint damage that occurs during installation must be touched up immediately to prevent rusting. Small areas of steel exposed by paint damage inside the tank will rust quickly when submerged.

Padding of some sort is recommended in the bottom of the tank to help prevent paint damage from dirt imbedded in the worker's shoes. Heavy plastic sheet or cardboard may be used. Remove any padding material before installing media or filling the tank with water.*

Steel chips from any drilling inside the tank should be removed immediately. Steel chips will cut the paint and become imbedded in shoes, carrying the damage to all parts of the tank. Exposed steel in newly drilled holes should be coated with touch-up paint provided with the plant.

Check for debris inside the underdrain headers in the filter compartments. Any large objects can be removed by hand. Sand or any other debris can be flushed out with a hose. Do this before placing the tanks.*

***NOTE:** Unless otherwise specified media installation is required on the TM-350A.

C. RECOMMENDATIONS FOR HANDLING AND STORING MEDIA*

1. Storage

A. Mixed Media Filter Materials

The filter media for your TRI-MITE water treatment plant will arrive in bags, crated and clearly identified. Bagged material is not generally shipped on pallets because it gets bumped off the pallets and freight damage is high. Do not plan on placing material directly from the

PLACING THE TRI-MITE

A. PLACING THE TANK

Lifting provisions have been designed into each tank. The design is based on connecting lifting slings to the tank with shackles. Selection of lifting machinery and equipment proper for the size and weight of the tank shall be the responsibility of the customer's mill-wrights. The longest practical slings are recommended.

Pads shall be such that the tank is level and, where more than one tank is shown on the Plans, all are at the same elevation. Pads which are not level and smooth may cause damaging stress in the tank plates and welds when the tanks are filled with water. Grouting may be used to correct any deficiencies in the pads.

Tank bottoms are not painted because protecting this surface during shipping and handling is not practical. Coal tar or asphaltic base mastic compound, such as heavy roofing compound, shall be spread evenly over the surface of the pads, before the tanks are placed, to seal the bottom surface of the tank from rusting. A 1/4 to 3/8 inch thick uniform layer of compound should be enough to seal the bottom surface of the tank to the pad with a quantity visible around the edges of the tank after placement.

Position tank squarely on the pad and make any alignment necessary for connection to the influent, effluent, backwash, waste and any other interconnecting equipment shown on the PROJECT ASSEMBLY drawings.

B. TANK WEIGHTS

	TM-350A
Shipping (lbs.)	16,000*
Operating (lbs.)	74,000

* These weights do not include media (which is shipped separate).

a.Adsorption Media

CAUTION: The plastic adsorption media is flammable. Exercise great caution. Do not allow welding or flames of any sort to come into contact with the dry material.

Now you can install the adsorption media in the clarifier. It ships in "gaylords" (cardboard crates), each weighing between 700 and 900 lbs. It can be placed in any fashion that is most convenient for you.

Follow these steps:.

1. Before you proceed, the influent valve must be installed and closed.

2. Make sure that the clarifier compartment is totally clean (use a vacuum cleaner) of any debris. Make a final check of the air distribution system to be sure everything is tight and secure.

3. Make some light pencil marks on the interior walls at a level of 4 ft. above the floor. You can use these to make sure that you don't place too much media.

4. You must exercise caution to make sure that the air laterals are not damaged by the impact of falling media. To do this, run one to two feet (no more!) of water into the compartment.

5. As media is poured, a small amount of fine dust may be released. It is recommended that anyone working in the immediate vicinity wear a particle mask to prevent inhaling this material.

6. The easiest way to place media is to raise each gaylord up over the tank on a forklift. Then, cut open one side of the gaylord with a utility knife, and let the material run down into the tank. You will need to cut through the plastic liner also. A garden rake or hoe will come in handy to help remove the media and to move it around in the tank.

7. The following precautions are to be observed while placing media:

   a. Be very careful that you don't drop foreign material into the tank with the media. If you do, be sure to remove it before proceeding. Be particularly careful of dropping bits of cardboard, plastic liner, and pieces of the pallet.

   b. Be careful to knock off loose pieces of gravel, soil, etc., from the pallet before lifting it up to the tank.

6. Install the holddown elements. These consist of a piece of threaded rod (3/4" or 1" dia.) nuts, and appropriate washers, which attach to gussets and brackets welded to the tank wall.

   a. Insert rod first through hole in gusset, install washer and nut under the gusset.

   b. Install washer and (I) nuts above the gussets. Tighten the I nuts together at some distance from the gusset.

   c. Tighten nut under gusset while holding top nut above gusset to prevent rod from turning. This will move the rod down and apply pressure on the holddown angle.

   d. Tighten until the gaskets on the support angle are getting compressed by about 1/8".

   e. Loosen double nut on top of gusset and tighten the bottom one against the top surface of the gusset. The remaining nut can be removed or better tightened against the nut under it so it is not lost.

c. Mixed Media

For filter media place see "Building The Filter".

C. ELECTRICAL CONNECTIONS

Refer to the Electrical Interconnection Diagram for the required field wiring instructions. All wiring should comply with any applicable codes.

Provide 120/240V, 60 Hz, 1 phase, service to the control panel as detailed on the electrical drawings and technical data sheet. This will be provided by the transformer in the power panel.

Make sure that you note the three clearwell level switches which must be provided by others and wired to the control panel. These are:

-- Plant off (LSH 001)
-- Backwash permissive (plant on) (LSL 001)
-- Pump protection (LSLL 001)

When the connections are completed, you can test teach piece of equipment by forcing the appropriate output on. This is done with the programmer panel and is described in the Operation and Maintenance portion of this manual.

Electrical wiring to the chemical mixers should be provided for the mixers. There should be 5 to 6 feet of flexible cord at each mixer to provide for removal of the mixers without the need to disconnect wiring. The chemical mixers are not connected to the plant controls.

Electrical connections to chemical feed pumps, which are not motor driven, are wired directly from the plant controls to the pump. These small pumps are essentially a solenoid and you will see that there is no rotating motor drive.

3. Solution Feed Lines

Chemical feed lines should be run from the pumps to the injection connections shown on the drawings. Each discharge line is to be run into a tee assembly, where it is mixed with service water. The mixture is then run to the injection point on the raw water line, using 1/2 in. O.D. plastic tubing. Generally, one injection point is used for alum, fed into the main raw water line.

Polymer connections need to be made in the line feeding each tank ahead of the influent valve. The nozzles are threaded into 3/4 in. couplings in the pipe, supplied by others.

B. Alum Feed System Assembly (By Others)

All of the equipment supplied by USF is shown on the Bill of Material with the Chemical Feed Assembly, Alum drawing. The equipment needed but not supplied by USF with the standard plant is shown on the drawing.

The following discussion is based on plants using an alum mix tank supplied by USF. If your plant uses a liquid alum system, USF does not supply the storage tank or appurtenances. In this case, ignore the references to the storage tank and mixers.

The alum solution tank should be placed where you can readily get at the large hole in the cover to add chemicals. A plastic cover is provided for this access hole to keep your mixed solution clean.

The mixer clamps on the side of the tank in the opening in the cover provided for its mounting. Adjust the swivels on the mixer mounting clamp so that the mixer shaft is at the angles in the tank recommended by the manufacturer in order to have the most efficient solution mixing. There are manufacturer's instructions for the mixer in the Equipment Data

Connect the section side of the pumps to the valves with the vinyl plastic tubing that came with the pump. Connect the strainer(s) foot valve(s) that came with the pump to the fitting inside the tank with the same tubing.

Your polymer feed system should now be complete.

D. Hypochlorite System Assembly (By Others)

All of the equipment supplied by USF is shown on the Bill of Material with the Chemical Feed Assembly, hypochlorite drawings. The equipment needed but not supplied by USF with the standard plant is shown on the drawing.

Place the hypochlorite tank where you can readily get at the large hole in the cover to add chemicals. A plastic cover is provided for this access hole to keep your mixed solution clean.

The mixer for your hypochlorite solution tank is a direct drive, high speed agitator. The mixer comes disassembled for compactness in shipping. You will need the mixer, a shaft, and two propellers. Everything should be together in the crate. Line the keyway groove in the end of the shaft up with the key in the drive head of the mixer and push the shaft all the way in. The key is permanently held in place from the factory in the slot where the clamping bolt goes through. Tighten the clamping bolt in the drive head. Loosen the set screw in the two propellers and slip both of them on the shaft. The curved side of the blades should go toward the mixer head; the propellers are going to push the water down and away from the mixer head. The bottom propeller should be flush with the free end of the shaft. The second propeller should be about 12 inches up the shaft from the first. Some thread locking compound such as "Locktite" is recommended on the propeller set screws before you tighten them.

The mixer clamps on the side of the tank in the opening in the cover provided for its mounting. Adjust the swivels on the mixer mounting clamp so that the mixer shaft is at the angles in the tank recommended by the manufacturer in order to have the most efficient solution mixing.
There are manufacturer's instructions for the mixer in the Equipment Data section of this Owner's Manual which should be reviewed also before you start the mixer up.

Your hypochlorite feed system includes one chemical feed pump to be mounted on the tank cover. Wiring and connecting the pumps to the plant have been covered earlier in this instruction. Assemble the nipples, tee, elbows, and the plastic valves to the fitting in the bottom of the tank as shown in the detail on the drawing. Install the 1/2 in. plug in the drain hole.

The filter media should have been stored as described in the section covering media handling at the beginning of these instructions. You may want to make your arrangements to move the media from storage to the filters with as little time loss as possible when the Technical Director arrives to build your filter.

Several workers will be required to install the media under his direction. Ladders, shovels, rakes and scraps of plywood to stand on inside of the filter will be needed. A lift truck is almost essential.

All electrical, connections need to be complete. The plant needs to be ready to run when the Technical Director arrives. Water for backwash during media placement should be available.

The backwash flow rate need to be set. The manual rate set valve in your backwash line will be set to establish the correct flow rate for the type of filter and the temperature of your backwash water. The procedure is described in Section III of the Operation and Maintenance section of this manual. The Technical Director will explain the chart and the flow rate setting during the building of the filter.

The Technical Director will direct you in building your filter to the MEDIA DESIGN-FILTER drawing in the DRAWING section of this Owner's Manual.

The USF Technical Director will help you check out the whole plant BEFORE it is started up. He will train and check out your operator in the functioning of the plant when it is started up.

The next section of these instructions will cover plant OPERATION AND MAINTENANCE.

MATERIAL SAFETY DATA SHEETS

— Section 1 —
Product Identification

Material Safety Data Sheet

The Sherwin-Williams Co.
101 Prospect Ave. N.W.
Cleveland, OH 44115

Emergency telephone number (216) 566-2917
Information telephone number (216) 566-2902
Date of preparation November 26, 2002

©2002, The Sherwin-Williams Co.

COROTHANE® I Moisture Curing Urethanes

CRTHN/4

CAS No.	— Section 2 — Hazardous Ingredients (percent by weight)	ACGIH TLV <STEL>	OSHA PEL <STEL>	Units	LD50 (Rat-Oral) mg/kg	LC50 (Rat) ppm/4hr.	Vapor Pressure mm	B65A15 Zinc Primer	B65G11 Galva-Pac Zinc Primer	B65G10 Part A Galva-Pac Zinc Primer	B69D210 Part F Zinc Dust
100-41-4 §	Ethylbenzene	100 <125>	100 <125>	ppm	3500	NAv	7.1	0.2	0.8	4	
1330-20-7 §	Xylene	100 <150>	100 <150>	ppm	4300	5000	5.9		5	20	
64742-95-6	Light Aromatic Hydrocarbons	NAv	NAv		NAv	NAv	3.8	2		3	
108-67-8	1,3,5-Trimethylbenzene	25	25	ppm	NAv	NAv	2.0	3		3	
95-63-6 §	1,2,4-Trimethylbenzene	25	25	ppm	NAv	NAv	2.0	4	1	5	
101-68-8 §	4, 4'-Diphenylmethane Diisocyanate	0.005		ppm	NAv	NAv		2	2	7	
4083-64-1	p-Toluenesulfonyl Isocyanate	NAv	NAv		NAv	NAv				2	
9016-87-9 §	Diphenylmethane Diisocyanate Polymer	NAv	NAv		NAv	NAv		7	6	24	
7440-66-6	Zinc	NAv	NAv		NAv	NAv		53	76		100
14808-60-7	Quartz	0.05	0.1	mg/m3 as Resp. Dust	NAv	NAv		7			
14807-96-6	Talc	2	2	mg/m3 as Resp. Dust	NAv	NAv		4			
§	Chromium III Compound. [% Chromium]							0.6 [0.4]			
§	Zinc Compound. [% Zinc]							53 [51]	76 [74]		100 [97]
	Weight per Gallon (lbs.)							22.51	28.59	10.83	58.60
	Solids by Weight (%)							88.5	91.8	65.1	100.0
	Solids by Volume (%)							64.3	67.2	47.5	100.0
	VOC (Volatile Organic Compounds) - lbs./gal.							2.58	2.35	3.77	0.00
	Photochemically Reactive							Yes	Yes	Yes	No
	Flash Point (°F)							101	90	94	None
	DOL Storage Category							2	1C	1C	NAp
	Flammability Classification (Flammable - Combustible - Not Applicable)							Combustible	Flammable	Flammable	NAp
	HMIS (NFPA) Rating (health - flammability - reactivity)							3* - 2 - 1	3* - 3 - 1	3* - 3 - 2	2 - 0 - 1

PERCENT BY WEIGHT

§ Ingredient subject to the reporting requirements of the Superfund Amendments and Reauthorization Act (SARA) Section 313, 40 CFR 372.65 C

→→→ *MSDS Text Page Follows* →→→

Section 3 — Hazards Identification

ROUTES OF EXPOSURE - Exposure may be by INHALATION and/or SKIN or EYE contact, depending on conditions of use. To minimize exposure, follow recommendations for proper use, ventilation, and personal protective equipment.

EFFECTS OF OVEREXPOSURE - Irritation of eyes, skin and upper respiratory system. May cause nervous system depression. Extreme overexposure may result in unconsciousness and possibly death.

SIGNS AND SYMPTOMS OF OVEREXPOSURE - Headache, dizziness, nausea, and loss of coordination are indications of excessive exposure to vapors or spray mists. Redness and itching or burning sensation may indicate eye or excessive skin exposure.

MEDICAL CONDITIONS AGGRAVATED BY EXPOSURE - May cause allergic respiratory and/or skin reaction in susceptible persons or sensitization. This effect may be delayed several hours after exposure.

CANCER INFORMATION - For complete discussion of toxicology data refer to Section 11.

Section 4 — First Aid Measures

If INHALED:	If any breathing problems occur during use, LEAVE THE AREA and get fresh air. If problems remain or occur later, IMMEDIATELY get medical attention.
If on SKIN:	Wash affected area thoroughly with soap and water. Remove contaminated clothing and launder before re-use.
If in EYES:	Flush eyes with large amounts of water for 15 minutes. Get medical attention.
If SWALLOWED:	Do not induce vomiting. Get medical attention immediately.

Section 5 — Fire Fighting Measures

FLASH POINT	*LEL*	*UEL*
See TABLE	0.7	7.0

FLAMMABILITY CLASSIFICATION - See TABLE

EXTINGUISHING MEDIA - Carbon Dioxide, Dry Chemical, Foam

UNUSUAL FIRE AND EXPLOSION HAZARDS - Closed containers may explode when exposed to extreme heat. Application to hot surfaces requires special precautions. During emergency conditions overexposure to decomposition products may cause a health hazard. Symptoms may not be immediately apparent. Obtain medical attention.

Dry zinc dust will not ignite spontaneously. In contact with atmospheric moisture, zinc dust can form an explosive mixture with air. When dampened in confined spaces, explosive concentrations of hydrogen may form.

SPECIAL FIRE FIGHTING PROCEDURES - Full protective equipment including self-contained breathing apparatus should be used. Water spray may be ineffective. If water is used, fog nozzles are preferable. Water may be used to cool closed containers to prevent pressure build-up and possible autoignition or explosion when exposed to extreme heat.

Section 6 — Accidental Release Measures

STEPS TO BE TAKEN IN CASE MATERIAL IS RELEASED OR SPILLED - Remove all sources of ignition. Ventilate the area. All personnel in the area should be protected as in Section 8. Cover spill with absorbent material. Deactivate spilled material with a 10% ammonium hydroxide solution (household ammonia). After 10 minutes, collect in open containers and add more ammonia. Cover loosely. Wash spill area with soap and water.

Section 7 — Handling and Storage

STORAGE CATEGORY - See TABLE

PRECAUTIONS TO BE TAKEN IN HANDLING AND STORING - Keep away from heat, sparks, and open flame. During use and until all vapors are gone: Keep area ventilated - Do not smoke - Extinguish all flames, pilot lights, and heaters - Turn off stoves, electric tools and appliances, and any other sources of ignition. Consult NFPA Code. Use approved Bonding and Grounding procedures. Keep container closed when not in use. Transfer only to approved containers with complete and appropriate labeling. Do not take internally. Keep out of the reach of children.

Use entire container at one time. Do not reseal opened containers containing Zinc dust. Do not transfer Zinc dust to other containers.

Section 8 — Exposure Controls/Personal Protection

PRECAUTIONS TO BE TAKEN IN USE - NO PERSON SHOULD USE THESE PRODUCTS, OR BE IN THE AREA WHERE THESE PRODUCTS ARE BEING USED, IF THEY HAVE CHRONIC (LONG-TERM) LUNG OR BREATHING PROBLEMS OR IF THEY EVER HAD A REACTION TO ISOCYANATES.

Use only with adequate ventilation. Avoid contact with skin and eyes. Avoid breathing vapor and spray mist. Wash hands after using.

These coatings may contain materials classified as nuisance particulates (listed "as Dust" in Section 2) which may be present at hazardous levels only during sanding or abrading of the dried film. If no specific dusts are listed in Section 2, the applicable limits for nuisance dusts are ACGIH TLV 10 mg./m3 (total dust), 3 mg./m3 (respirable fraction), OSHA PEL 15 mg./m3 (total dust), 5 mg./m3 (respirable fraction).

VENTILATION - Local exhaust preferable. General exhaust acceptable if the exposure to materials in Section 2 is maintained below applicable exposure limits. Refer to OSHA Standards 1910.94,1910.107, 1910.108.

RESPIRATORY PROTECTION - Where overspray is present, a positive pressure air supplied respirator (TC19C NIOSH/MSHA approved) should be worn. If unavailable, a properly fitted organic vapor/particulate respirator approved by NIOSH/MSHA for protection against materials in Section 2 may be effective. Follow respirator manufacturer's directions for use. Wear the respirator for the whole time of spraying and until all vapors and mists are gone. NO PERSONS SHOULD BE ALLOWED IN THE AREA WHERE THIS PRODUCT IS BEING USED UNLESS EQUIPPED WITH THE SAME RESPIRATOR PROTECTION RECOMMENDED FOR THE PAINTERS.

When sanding, wirebrushing, abrading, burning or welding the dried film, wear a particulate respirator approved by NIOSH/MSHA for protection against non-volatile materials in Section 2.

PROTECTIVE GLOVES - Wear gloves which are recommended by glove supplier for protection against materials in Section 2.

EYE PROTECTION - Wear safety spectacles with unperforated sideshields.

OTHER PROTECTIVE EQUIPMENT - Use barrier cream on exposed skin.

OTHER PRECAUTIONS - Intentional misuse by deliberately concentrating and inhaling the contents can be harmful or fatal.

Section 9 — Physical and Chemical Properties

PRODUCT WEIGHT	See TABLE	EVAPORATION RATE	Slower than ether
SPECIFIC GRAVITY	1.30 - 7.05	VAPOR DENSITY	Heavier than air
BOILING POINT	277 - 360 °F	MELTING POINT	Not Available
VOLATILE VOLUME	0 - 52 %	SOLUBILITY IN WATER	Not Available

Section 10 — Stability and Reactivity

STABILITY - Stable

CONDITIONS TO AVOID - Avoid contamination of Zinc dust or Zinc-containing mixtures with water. Avoid excess dusting of Zinc dust portions.

INCOMPATIBILITY - Contamination with Water, Alcohols, Amines and other compounds which react with isocyanates, may result in dangerous pressure in, and possible bursting of, closed containers.

HAZARDOUS DECOMPOSITION PRODUCTS - By fire: Carbon Dioxide, Carbon Monoxide, Oxides of Nitrogen, possibility of Hydrogen Cyanide, Oxides of Metals in Section 2

HAZARDOUS POLYMERIZATION - Will not occur

Section 11 — Toxicological Information

CHRONIC Health Hazards - Ethylbenzene is classified by IARC as possibly carcinogenic to humans (2B) based on inadequate evidence in humans and sufficient evidence in laboratory animals. Lifetime inhalation exposure of rats and mice to high ethylbenzene concentrations resulted in increases in certain types of cancer, including kidney tumors in rats and lung and liver tumors in mice. These effects were not observed in animals exposed to lower concentrations. There is no evidence that ethylbenzene causes cancer in humans.

Crystalline Silica (Quartz, Cristobalite) is listed by IARC and NTP. Long term exposure to high levels of silica dust, which can occur only when sanding or abrading the dry film, may cause lung damage (silicosis) and possibly cancer.

Prolonged overexposure to solvent ingredients in Section 2 may cause adverse effects to the liver, urinary, and reproductive systems.

Persons sensitive to isocyanates will experience increased allergic reaction on repeated exposure.

Reports have associated repeated and prolonged overexposure to solvents with permanent brain and nervous system damage.

Section 12 — Ecological Information

No data available.

Section 13 — Disposal Considerations

WASTE DISPOSAL METHOD - Waste from B69D210 is not hazardous as defined under the Resource Conservation and Recovery Act (RCRA) 40 CFR 261.

Waste from the other products listed on this sheet may be hazardous as defined under the Resource Conservation and Recovery Act (RCRA) 40 CFR 261. Waste must be tested for ignitability to determine the applicable EPA hazardous waste numbers. Waste from products containing Chromium must also be tested for extractability.

Incinerate all products in approved facility. Do not incinerate closed container. Dispose of in accordance with Federal, State/Provincial, and Local regulations regarding pollution.

Section 14 — Transport Information

No data available.

Section 15 — Regulatory Information

CALIFORNIA PROPOSITION 65 - WARNING: These products, except for B69D210, contain chemicals known to the State of California to cause cancer and birth defects or other reproductive harm. B69D210 contains a chemical known to tha State of California to cause cancer.

TSCA CERTIFICATION - All chemicals in these products are listed, or are exempt from listing, on the TSCA Inventory.

Section 16 — Other Information

These products have been classified in accordance with the hazard criteria of the CPR and the MSDS contains all of the information required by the CPR.

The above information pertains to these products as currently formulated, and is based on the information available at this time. Addition of reducers or other additives to these products may substantially alter the composition and hazards of the product. Since conditions of use are outside our control, we make no warranties, express or implied, and assume no liability in connection with any use of this information.

THE SHERWIN-WILLIAMS COMPANY

INDUSTRIAL & MARINE COATINGS

Industrial and Marine Coatings

NSF®

Certified to ANSI/NSF 61

5.11

COROTHANE® I GALVAPAC ZINC PRIMER

PART A	B65G10	BINDER
PART F	B69D210	ZINC DUST

PRODUCT INFORMATION

Revised 12/02

PRODUCT DESCRIPTION

COROTHANE I GALVAPAC ZINC PRIMER is a two component, VOC compliant, moisture curing urethane zinc-rich primer that contains micaceous iron oxide, designed for low temperature application to blast cleaned or power tool cleaned steel surfaces.

- Low temperature application - down to 20°F
- NSF approved to Standard 61 for potable water (tanks of 5,000 gallons and larger - untopcoated)
- Easy to apply and recoat
- Usable for immersion service with recommended topcoated
- Resistant to mudcracking
- Abrasion and chemical resistant
- Meets Class B requirements for Slip Coefficient and Creep Resistance, .54

RECOMMENDED USES

- **Immersion Service - potable water**: Meets NSF Standard 61 for use in potable water storage and Federal EPA requirements for composition of coatings used in potable water.
- On steel where resistance to rust or corrosion undercutting is required
- As a primer in a urethane coating system for bridges, tanks, chemical, and marine structures
- Ideal for priming water assisted abrasive blasted surfaces where flash rusting or blooming limits the use of conventional zinc rich coatings
- As a spot primer on hand and power tool cleaned surfaces for lead overcoating systems
- Not for use with cathodic protection

PRODUCT CHARACTERISTICS

Finish: Flat

Color: Gray

Volume Solids: 67% ± 2%, mixed

Weight Solids: 91.7% ± 2%

VOC (calculated): <340 g/L; 2.8 lb/gal, mixed

Mix Ratio: 2 components; premeasured 2.75 gallon mix

Zinc Content in Dry Film: 83% ±2% by weight

Recommended Spreading Rate per coat:
Wet mils: 4.5 - 6.8
Dry mils: 3.0 - 4.0
Coverage: 268 - 358 sq ft/gal approximate

Drying Schedule @ 5.0 mils wet @ 50% RH:

	@ 40°F	@ 77°F	@100°F
To touch:	45 minutes	20 minutes	10 minutes
To recoat (minimum), atmospheric service:	8 hours	4-6 hours	1 hour
To recoat (minimum), immersion service:	24 hours	12 hours	10 hours
To cure, atmospheric service:	5 days	3 days	1 day
To cure, immersion service:	14 days	7 days	5 days

Drying time is temperature, humidity, and film thickness dependent.
For **Potable Water Service**, allow a minimum cure time of 7 days @ 77°F prior to placing in service. Sterilize and rinse per AWWA C652-92.

Shelf Life: unopened, at 77°F — Part A - 12 months; Part F - 24 months

Flash Point: 94°F, PMCC

Reducer/Clean Up: Reducer #15, R7K15

PERFORMANCE CHARACTERISTICS

System Tested: (unless otherwise indicated)
Substrate: Steel
Surface Preparation: SSPC-SP5
1 ct. Corothane I GalvaPac Zinc Primer @ 3.5 mils dft
1 ct. Corothane I Mio-Aluminum @ 3.0 mils dft

Abrasion Resistance:
Method: ASTM D4060, CS17 wheel, 1000 cycles, 1 kg load
Result: 45 mg loss

Adhesion (Zinc Only):
Method: ASTM D4541
Result: 1943psi

Corrosion Weathering:
Method: ASTM D5984, 15 cycles, 5000 hours
Result: Rating 10 per ASTM D610 for Rusting (field)
Result: Rating 10 per ASTM D714 for Blistering

Direct Impact Resistance (Zinc Only):
Method: ASTM D2794
Result: 160 in. lb.

Dry Heat Resistance:
Method: ASTM D2485
Result: 300°F continuous, 350°F intermittent

Flexibility:
Method: ASTM D522, 180° bend, 1/4" mandrel
Result: Passes

Moisture Condensation Resistance (Zinc Only):
Method: ASTM D4585, 100°F, 4000 hours
Result: Rating 10 per ASTM D610 for Rusting
Result: Rating 10 per ASTM D714 for Blistering

Pencil Hardness:
Method: ASTM D3363
Result: 2H (zinc only)

Salt Fog Resistance (Zinc Only):
Method: ASTM B117, 5000 hours
Result: Rating 10 per ASTM D610 for Rusting
Result: Rating 10 per ASTM D714 for Blistering

Slip Coefficient (Zinc Only):
Method: AISC Specification for Structural Joints Using ASTM A325 or ASTM A490 Bolts
Result: Class B, .54

Wet Heat Resistance:
Method: Non-immersion
Result: 190°F

continued on back

THE SHERWIN-WILLIAMS COMPANY

INDUSTRIAL & MARINE COATINGS

Industrial and Marine Coatings

NSF

Certified to ANSI/NSF 61

COROTHANE® I GALVAPAC ZINC PRIMER

PART A	B65G10	BINDER
PART F	B69D210	ZINC DUST

PRODUCT INFORMATION

RECOMMENDED SYSTEMS

Immersion Service (Potable Water)
Steel:
1 ct. Corothane I GalvaPac Zinc Primer @ 3.0 - 4.0 mils dft (5,000 gallon minimum tank size)

Steel:
1 ct. Corothane I GalvaPac Zinc Primer @ 3.0 - 4.0 mils dft
2 cts. Hi-Solids Catalyzed Epoxy @ 5.0 - 6.0 mils dft/ct (20,000 gallon minimum tank size)

Other acceptable topcoats	Min. tank size
Epoxide II Low Temp	20,000 gallons
Epoxide HS	20,000 gallons
Tank Clad HS	60,000 gallons

Immersion Service (Non-Potable Water)
Steel:
1 ct. Corothane I GalvaPac Zinc Primer @ 3.0 - 4.0 mils dft
2 cts. Corothane I Coal Tar @ 5.0 - 7.0 mils dft/ct

Atmospheric Service
Steel: Moderate Service
1 ct. Corothane I GalvaPac Zinc Primer @ 3.0 - 4.0 mils dft
1-2 cts. Corothane I Aliphatic Finish Coat @ 2.0 - 3.0 mils dft/ct
or Corothane I MIO-Aluminum @ 2.0 - 3.0 mils dft/ct
or Corothane I HS @ 2.0 - 3.0 mils dft/ct

Steel: Moderate Service, Rapid Return to Service
1 ct. Corothane I GalvaPac Zinc Primer @ 3.0 - 4.0 mils dft
1 ct. Fast Clad Urethane @ 6.0 - 9.0 mils dft

Steel: Severe Service
1 ct. Corothane I GalvaPac Zinc Primer @ 3.0 - 4.0 mils dft
1 ct. Corothane I Mastic @ 2.5 - 3.5 mils dft
1 ct. Corothane I Aliphatic Finish Coat @ 2.0 - 3.0 mils dft

Previously Painted Steel:
(including red lead overcoatings)
Spot prime bare steel with 1 coat of Corothane I GalvaPac Zinc Primer
1 ct. Corothane I Mastic @ 2.5 - 3.5 mils dft
1 ct. Corothane I Aliphatic Finish Coat @ 2.0 - 3.0 mils dft

The systems listed above are representative of the product's use. Other systems may be appropriate.

SURFACE PREPARATION

Surface must be clean, dry, and in sound condition. Remove all oil, dust, grease, dirt, loose rust, and other foreign material to ensure adequate adhesion.

Refer to product Application Bulletin for detailed surface preparation information.

Minimum recommended surface preparation:
Iron & Steel
Atmospheric: SSPC-SP6, 2 mil profile
Immersion, with recommended topcoat: SSPC-SP10, 2 mil profile
Spot Prime/Touch-Up: SSPC-SP3

TINTING

Do not tint.

APPLICATION CONDITIONS

Temperature:
air and surface: 20°F minimum, 100°F maximum
material: 45°F minimum at least 5°F above the dew point. Do not apply over surface ice
Relative humidity: Can be applied at relative humidities up to 99%.

Refer to product Application Bulletin for detailed application information.

ORDERING INFORMATION

Packaging:
Part A: 1.73 gallons in a 3 gallon container
Part F: 60 lb zinc dust

Weight per gallon: 28.5 ± 0.2 lb

SAFETY PRECAUTIONS

Refer to the MSDS sheet before use.

Published technical data and instructions are subject to change without notice. Contact your Sherwin-Williams representative for additional technical data and instructions.

THE SHERWIN-WILLIAMS COMPANY

INDUSTRIAL & MARINE COATINGS

Industrial and Marine Coatings

NSF®

Certified to ANSI/NSF 61

5.11A

COROTHANE® I GALVAPAC ZINC PRIMER

PART A	B65G10	BINDER
PART F	B69D210	ZINC DUST

APPLICATION BULLETIN

Revised 12/02

SURFACE PREPARATION

Surface must be clean, dry, and in sound condition. Remove all oil, dust, grease, dirt, loose rust, and other foreign material to ensure adequate adhesion.

Iron & Steel (immersion service)
Remove all oil and grease from surface by Solvent Cleaning per SSPC-SP1. Minimum surface preparation is Near White Metal Blast Cleaning per SSPC-SP10. Blast clean all surfaces using a sharp, angular abrasive for optimum surface profile (2 mils). Remove all weld spatter and round all sharp edges by grinding a minimum 1/4" radius. Prime any bare steel the same day as it is cleaned or before flash rusting occurs.

Iron & Steel (atmospheric service)
Remove all oil and grease from surface by Solvent Cleaning per SSPC-SP1. Minimum surface preparation is Commercial Blast Cleaning per SSPC-SP6. For better performance, use Near White Metal Blast Cleaning per SSPC-SP10. Blast clean all surfaces using a sharp, angular abrasive for optimum surface profile (2 mils). Prime any bare steel the same day as it is cleaned or before flash rusting occurs.

Previously Painted Surfaces
If in sound condition, clean the surface of all foreign material. Smooth, hard, or glossy coatings and surfaces should be dulled by abrading the surface. Apply a test area, allowing paint to dry one week before testing adhesion. If adhesion is poor, or if this product attacks the previous finish, removal of the previous coating may be necessary. If paint is peeling or badly weathered, clean surface to sound substrate and treat as a new surface as above.

APPLICATION CONDITIONS

Temperature:	
air and surface:	20°F minimum, 100°F maximum
material:	45°F minimum at least 5°F above the dew point. Do not apply over surface ice
Relative humidity:	Can be applied at relative humidities up to 99%.

APPLICATION EQUIPMENT

The following is a guide. Changes in pressures and tip sizes may be needed for proper spray characteristics. Always purge spray equipment before use with listed reducer. Any reduction must be compatible with the existing environmental and application conditions.

Reducer/Clean Up ..... Reducer #15, R7K15

Airless Spray

Pump	30:1
Pressure	1800-2000 psi
Hose	1/4" ID
Tip	.015" - .019"
Filter	60 mesh
Reduction	As needed up to 10% by volume

Conventional Spray

Unit	Graco	Binks
Gun	900	95
Fluid Nozzle	070	66/65
Air Nozzle	947	66PR
Atomization Pressure	60-70 psi	60-70 psi
Fluid Pressure	15-20 psi	15-20 psi
Reduction	As needed up to 10% by volume	

Brush

Brush	Natural bristle
Reduction	As needed up to 10% by volume

Roller

Cover	3/8" natural or synthetic with phenolic core
Reduction	As needed up to 10% by volume

If specific application equipment is listed above, equivalent equipment may be substituted.

continued on back

THE SHERWIN-WILLIAMS COMPANY

INDUSTRIAL & MARINE COATINGS

Industrial and Marine Coatings

NSF

Certified to ANSI/NSF 61

5.11A

COROTHANE® I GALVAPAC ZINC PRIMER

PART A	B65G10	BINDER
PART F	B69D210	ZINC DUST

APPLICATION BULLETIN

APPLICATION PROCEDURES

Surface preparation must be completed as indicated.

Corothane I - GalvaPac Zinc Primer comes in 2 premeasured containers which when mixed provides 2.75 gallons of read-to-apply material.

Mixing Instructions: Thoroughly agitate Binder Part A. Using continuous air driven agitation, slowly mix all 60 lbs. of Zinc Dust, B69D210, Part F into Binder Part A until mixture is completely uniform. After mixing, pour mixture through 30-60 mesh screen. Mixed material must be used within 8 hours. Do not mix previously mixed material with new.

If reducer solvent is used, add only after both components have been thoroughly mixed.

Apply paint at the recommended film thickness and spreading rate as indicated below:

Recommended Spreading Rate per coat:

Wet mils:	4.5 - 6.8
Dry mils:	3.0 - 4.0
Coverage:	268 - 358 sq ft/gal approximate

Drying Schedule @ 5.0 mils wet @ 50% RH:

	@ 40°F	@ 77°F	@100°F
To touch:	45 minutes	20 minutes	10 minutes
To recoat (minimum), atmospheric service:	8 hours	4-6 hours	1 hour
To recoat (minimum), immersion service:	24 hours	12 hours	10 hours
To cure, atmospheric service:	5 days	3 days	1 day
To cure, immersion service:	14 days	7 days	5 days

Drying time is temperature, humidity, and film thickness dependent.
For **Potable Water Service**, allow a minimum cure time of 7 days @ 77°F prior to placing in service. Sterilize and rinse per AWWA C652-92.

Application of coating above maximum or below minimum recommended spreading rate may adversely affect coating performance.

PERFORMANCE TIPS

Stripe coat all crevices, welds, and sharp angles to prevent early failure in these areas.

When using spray application, use a 50% overlap with each pass of the gun to avoid holidays, bare areas, and pinholes. If necessary, cross spray at a right angle.

Spreading rates are calculated on volume solids and do not include an application loss factor due to surface profile, roughness or porosity of the surface, skill and technique of the applicator, method of application, various surface irregularities, material lost during mixing, spillage, overthinning, climatic conditions, and excessive film build.

Excessive reduction of material can affect film build, appearance, and adhesion.

In order to avoid blockage of spray equipment, clean equipment before use or before periods of extended downtime with Reducer #15, R7K15.

Pour a small amount of Reducer #15, R7K15 over the top of the paint in the can to prevent skinning or gelling.

Place a temporary cover over the pail to keep excessive moisture, condensation, fog, or rain from contaminating the coating.

Do not use continuous agitation.

For **Potable Water Service**, allow a minimum cure time of 7 days @ 77°F prior to placing in service. Sterilize and rinse per AWWA C652-92.

It is recommended that partially used cans not be sealed/closed for use at a later date.

An intermediate coat is recommended to provide a uniform appearance of the topcoat.

Not for use with cathodic protection.

Refer to Product Information sheet for additional performance characteristics and properties.

CLEAN UP INSTRUCTIONS

Clean spills and spatters immediately with Reducer #15, R7K15. Clean tools immediately after use with Reducer #15, R7K15. Follow manufacturer's safety recommendations when using any solvent.

SAFETY PRECAUTIONS

Refer to the MSDS sheet before use.

Published technical data and instructions are subject to change without notice. Contact your Sherwin-Williams representative for additional technical data and instructions.

— Section 1 —
Product Identification

Material Safety Data Sheet

The Sherwin-Williams Co.
101 Prospect Ave. N.W.
Cleveland, OH 44115

Emergency telephone number (216) 566-2917
Information telephone number (216) 566-2902
Date of preparation June 11, 2002

©2002, The Sherwin-Williams Co.

DURA-PLATE® 235 Multi-Purpose Epoxy

B67-235

CAS No.	— Section 2 — Hazardous Ingredients (percent by weight)	ACGIH TLV <STEL>	OSHA PEL <STEL>	Units	LD50 (Rat-Oral) mg/kg	LC50 (Rat) ppm/4hr.	Vapor Pressure mm	B67W235 Part A Mill White Tint Base	B67T235 Part A Ultradeep Tint Base	B67A235 Part A Haze Gray	B67B235 Part A Black	B67H235 Part A Buff	B67R235 Part A Red Oxide	B67V235 Part B Hardener
64742-88-7	Mineral Spirits.	100	100	ppm	NAv	NAv	2.0	< 3% due to tinting						
108-65-6	1-Methoxy-2-Propanol Acetate	NAv	NAv		8500	NAv	1.8	< 5% due to tinting						
100-41-4 §	Ethylbenzene	100 <125>	100 <125>	ppm	3500	NAv	7.1	0.3	0.3	0.3	0.3	0.3	0.3	0.4
1330-20-7 §	Xylene.	100 <150>	100 <150>	ppm	4300	5000	5.9	2	2	2	2	2	2	1
64742-95-6	Light Aromatic Hydrocarbons.	NAv	NAv		NAv	NAv	3.8	2	2	2	2	2	2	6
98-82-8 §	Cumene.	50	50	ppm	1400	NAv	10.0							1
108-67-8	1,3,5-Trimethylbenzene	25	25	ppm	NAv	NAv	2.0	2	2	2	2	2	2	8
95-63-6 §	1,2,4-Trimethylbenzene	25	25	ppm	NAv	NAv	2.0	3	3	3	3	3	3	12
71-36-3 §	1-Butanol	C 50	C 50	ppm (skin)	790	8000	5.5	3	3	3	3	3	3	5
110-43-0	Methyl n-Amyl Ketone.	50	100	ppm	1670	NAv	2.1	5	4	4	5	5	4	
107-15-3	Ethylenediamine.	10		ppm (skin)	NAv	NAv	10.7							1
90-72-2	Tri(dimethylaminomethyl)phenol.	NAv	NAv		1200	NAv								5
Proprietary	Epoxy Polymer.	NAv	NAv		NAv	NAv		22	26	23	24	23	23	
Proprietary	Urethane Polymer.	NAv	NAv		NAv	NAv		3	4	4	4	3	3	
Proprietary	Polyamine.	NAv	NAv		NAv	NAv								59
14807-96-6	Talc	2	2	mg/m3 as Resp. Dust	NAv	NAv		11	30	27	32	25	33	
12001-26-2	Mica	3	3	mg/m3 as Resp. Dust	NAv	NAv		8	12	10	13	10	10	
13463-67-7	Titanium Dioxide.	10	10[5]	mg/m3 as Dust [Resp. Fraction]	NAv	NAv		29	0 - 5	8		10		
1333-86-4	Carbon Black.	3.5	3.5	mg/m3	NAv	NAv		0 - 2	0 - 2	0.1	0.4			
	Weight per Gallon (lbs.)							12.69	11.50	12.05	11.78	12.20	12.12	7.88
	Solids by Weight (%)							83.0	82.9	82.3	82.0	82.6	82.5	63.8
	Solids by Volume (%)							69.2	71.8	69.7	69.8	69.7	69.8	60.5
	VOC (Volatile Organic Compounds) - lbs./gal.							2.15	1.97	2.12	2.11	2.12	2.11	2.85
	Flash Point (°F)							115	115	115	115	115	115	117
	HMIS (NFPA) Rating (health - flammability - reactivity)							2* - 2 - 0	2* - 2 - 0	2* - 2 - 0	2* - 2 - 0	2* - 2 - 0	2* - 2 - 0	3* - 2 - 0

PERCENT BY WEIGHT

§ Ingredient subject to the reporting requirements of the Superfund Amendments and Reauthorization Act (SARA) Section 313, 40 CFR 372.65 C

Section 3 — Hazards Identification

ROUTES OF EXPOSURE - Exposure may be by INHALATION and/or SKIN or EYE contact, depending on conditions of use. To minimize exposure, follow recommendations for proper use, ventilation, and personal protective equipment.

EFFECTS OF OVEREXPOSURE - May cause nervous system depression. Extreme overexposure may result in unconsciousness and possibly death.

B67V235 Hardener causes burns on contact with skin or eyes, and severe irritation of the upper respiratory system. Other products listed on this sheet cause irritation of eyes, skin and upper respiratory system.

SIGNS AND SYMPTOMS OF OVEREXPOSURE - Headache, dizziness, nausea, and loss of coordination are indications of excessive exposure to vapors or spray mists. Redness and itching or burning sensation may indicate eye or excessive skin exposure.

MEDICAL CONDITIONS AGGRAVATED BY EXPOSURE - May cause allergic skin reaction in susceptible persons or skin sensitization.

CANCER INFORMATION - For complete discussion of toxicology data refer to Section 11.

Section 4 — First Aid Measures

If INHALED:	If affected, remove from exposure. Restore breathing. Keep warm and quiet.
If on SKIN:	Wash affected area thoroughly with soap and water. Remove contaminated clothing and launder before re-use.
If in EYES:	Flush eyes with large amounts of water for 15 minutes. Get medical attention.
If SWALLOWED:	Do not induce vomiting. Get medical attention immediately.

Section 5 — Fire Fighting Measures

FLASH POINT	*LEL*	*UEL*
See TABLE	0.7	16.6

FLAMMABILITY CLASSIFICATION - Combustible, Flash above 99 and below 200 °F

EXTINGUISHING MEDIA - Carbon Dioxide, Dry Chemical, Foam

UNUSUAL FIRE AND EXPLOSION HAZARDS - Closed containers may explode when exposed to extreme heat. Application to hot surfaces requires special precautions. During emergency conditions overexposure to decomposition products may cause a health hazard. Symptoms may not be immediately apparent. Obtain medical attention.

SPECIAL FIRE FIGHTING PROCEDURES - Full protective equipment including self-contained breathing apparatus should be used. Water spray may be ineffective. If water is used, fog nozzles are preferable. Water may be used to cool closed containers to prevent pressure build-up and possible autoignition or explosion when exposed to extreme heat.

Section 6 — Accidental Release Measures

STEPS TO BE TAKEN IN CASE MATERIAL IS RELEASED OR SPILLED - Remove all sources of ignition. Ventilate the area. Remove with inert absorbent.

Section 7 — Handling and Storage

STORAGE CATEGORY - DOL Storage Class II

PRECAUTIONS TO BE TAKEN IN HANDLING AND STORING - Contents are COMBUSTIBLE. Keep away from heat and open flame. Consult NFPA Code. Use approved Bonding and Grounding procedures. Keep container closed when not in use. Transfer only to approved containers with complete and appropriate labeling. Do not take internally. Keep out of the reach of children.

Section 8 — Exposure Controls/Personal Protection

PRECAUTIONS TO BE TAKEN IN USE - Use only with adequate ventilation. Do not get in eyes or on skin. Avoid breathing vapor and spray mist. Wash hands after using.

These coatings may contain materials classified as nuisance particulates (listed "as Dust" in Section 2) which may be present at hazardous levels only during sanding or abrading of the dried film. If no specific dusts are listed in Section 2, the applicable limits for nuisance dusts are ACGIH TLV 10 mg./m3 (total dust), 3 mg./m3 (respirable fraction), OSHA PEL 15 mg./m3 (total dust), 5 mg./m3 (respirable fraction).

VENTILATION - Local exhaust preferable. General exhaust acceptable if the exposure to materials in Section 2 is maintained below applicable exposure limits. Refer to OSHA Standards 1910.94,1910.107, 1910.108.

RESPIRATORY PROTECTION - If personal exposure cannot be controlled below applicable limits by ventilation, wear a properly fitted organic vapor/particulate respirator approved by NIOSH/MSHA for protection against materials in Section 2.

When sanding or abrading the dried film, wear a dust/mist respirator approved by NIOSH/MSHA for dust which may be generated from this product, underlying paint, or the abrasive.

PROTECTIVE GLOVES - To prevent skin contact, wear gloves which are recommended by glove supplier for protection against materials in Section 2.

EYE PROTECTION - To prevent eye contact, wear safety spectacles with unperforated sideshields.

OTHER PROTECTIVE EQUIPMENT - Use barrier cream on exposed skin.

OTHER PRECAUTIONS - These products must be mixed with other components before use. Before opening the packages, READ AND FOLLOW WARNING LABELS ON ALL COMPONENTS. Intentional misuse by deliberately concentrating and inhaling the contents can be harmful or fatal.

Section 9 — Physical and Chemical Properties

PRODUCT WEIGHT	See TABLE	EVAPORATION RATE	Slower than ether
SPECIFIC GRAVITY	0.95 - 1.53	VAPOR DENSITY	Heavier than air
BOILING POINT	243 - 360 °F	MELTING POINT	Not Available
VOLATILE VOLUME	28 - 39 %	SOLUBILITY IN WATER	Not Available
PHOTOCHEMICALLY REACTIVE	Yes		

Section 10 — Stability and Reactivity

STABILITY - Stable
CONDITIONS TO AVOID - None known.
INCOMPATIBILITY - None known.
HAZARDOUS DECOMPOSITION PRODUCTS - By fire: Carbon Dioxide, Carbon Monoxide
HAZARDOUS POLYMERIZATION - Will not occur

Section 11 — Toxicological Information

CHRONIC Health Hazards - Carbon Black is classified by IARC as possibly carcinogenic to humans (group 2B) based on experimental animal data, however, there is insufficient evidence in humans for its carcinogenicity.

Ethylbenzene is classified by IARC as possibly carcinogenic to humans (2B) based on inadequate evidence in humans and sufficient evidence in laboratory animals. Lifetime inhalation exposure of rats and mice to high ethylbenzene concentrations resulted in increases in certain types of cancer, including kidney tumors in rats and lung and liver tumors in mice. These effects were not observed in animals exposed to lower concentrations. There is no evidence that ethylbenzene causes cancer in humans.

Prolonged overexposure to solvent ingredients in Section 2 may cause adverse effects to the liver, urinary and reproductive systems.

Rats exposed to titanium dioxide dust at 250 mg./m3 developed lung cancer, however, such exposure levels are not attainable in the workplace.

Reports have associated repeated and prolonged overexposure to solvents with permanent brain and nervous system damage.

Section 12 — Ecological Information

No data available.

Section 13 — Disposal Considerations

WASTE DISPOSAL METHOD - Waste from these products may be hazardous as defined under the Resource Conservation and Recovery Act (RCRA) 40 CFR 261. Waste must be tested for ignitability to determine the applicable EPA hazardous waste numbers.

Incinerate in approved facility. Do not incinerate closed container. Dispose of in accordance with Federal, State/Provincial, and Local regulations regarding pollution.

Section 14 — Transport Information

No data available.

Section 15 — Regulatory Information

CALIFORNIA PROPOSITION 65 - WARNING: These products contain chemicals known to the State of California to cause cancer and birth defects or other reproductive harm.

TSCA CERTIFICATION - All chemicals in these products are listed, or are exempt from listing, on the TSCA Inventory.

Section 16 — Other Information

These products have been classified in accordance with the hazard criteria of the CPR and the MSDS contains all of the information required by the CPR.

The above information pertains to these products as currently formulated, and is based on the information available at this time. Addition of reducers or other additives to these products may substantially alter the composition and hazards of the product. Since conditions of use are outside our control, we make no warranties, express or implied, and assume no liability in connection with any use of this information.

THE SHERWIN-WILLIAMS COMPANY

COVER THE EARTH

INDUSTRIAL & MARINE COATINGS

Industrial and Marine Coatings

NSF

Certified to ANSI/NSF 61

4.68

DURA-PLATE® 235 NSF

MULTI-PURPOSE EPOXY

PART A	B67X-235	SERIES COLORS
PART B	B67VX235	HARDENER

PRODUCT INFORMATION

Revised 2/03

PRODUCT DESCRIPTION

Dura-Plate 235 NSF Multi-Purpose Epoxy is a modified epoxy phenalkamine, formulated for immersion service in fresh, salt, and potable water.

- NSF approved to Standard 61 for potable water (tanks of 1,000 gallons and larger, 36" pipe and larger)
- Self-priming
- Suitable for use in USDA inspected facilities
- Low temperature application
- Cures at temperatures as low as 0°F
- Approved as a primer under MIL-P-23236, Type IV, Class 2, Grade B

RECOMMENDED USES

Immersion Service - Potable water: Meets NSF Standard 61 for use in potable water storage and Federal EPA requirements for composition of coatings used in potable water.

Recommended uses include:
- Salt water and fresh water immersion resistance
- Fabrication and new construction
- Acceptable for use with cathodic protection systems

PRODUCT CHARACTERISTICS

Finish: Semi-Gloss

Color: Off-White and Buff

Volume Solids: 68% ± 2%, mixed
Ultra White

Weight Solids: 79% ± 2%, mixed
Ultra White

VOC (EPA Method 24): Unreduced: 272 g/L; 2.3 lb/gal
Reduced 10%: 327 g/L; 2.72 lb/gal

Mix Ratio: 4:1 by volume

Recommended Spreading Rate per coat:
Wet mils: 6.0 - 12.0
Dry mils: 4.0 - 8.0
Coverage: 136 - 272 sq ft/gal approximate
NOTE: Brush or roll application may require multiple coats to achieve maximum film thickness and uniformity of appearance.

Drying Schedule @ 6.0 mils wet @ 50% RH:

	@ 0°F	@ 40°F	@ 77°F	@ 120°F
To touch:	18 hours	3½ hours	2 hours	20 minutes
To handle:	36 hours	12 hours	3½ hours	40 minutes
To recoat:				
minimum:	36 hours	12 hours	3½ hours	40 minutes
maximum:	6 months	6 months	6 months	6 months
Cure to service:	30 days	14 days	7 days	3 days

Drying time is temperature, humidity and film thickness dependent.

Pot Life:	16 hours	8 hours	4 hours	1 hour
Sweat-in-time:	1 hour	30 mins	15 minutes	5 minutes

If maximum recoat time is exceeded, abrade surface before recoating.

Shelf Life: 36 months, unopened, at 77°F

Flash Point: 116°F PMCC

Reducer/Clean Up: Reducer R7K104

PERFORMANCE CHARACTERISTICS

System Tested: (unless otherwise indicated)
Substrate: Steel
Surface Preparation: SSPC-SP10
2 cts. Dura-Plate 235 NSF @ 5.0 mils dft/ct

Abrasion Resistance:
Method: ASTM D4060, CS17 wheel, 1000 cycles, 1 kg load
Result: 65 mg loss

Adhesion:
Method: ASTM D4541
Result: 850 psi

Direct Impact Resistance:
Method: ASTM D2794
Result: 10 in lb

Dry Heat Resistance:
Method: ASTM D2485
Result: 250°F

Moisture Condensation Resistance:
Method: ASTM D4585, 100°F, 2000 hours
Result: Rating 10 per ASTM D610 for rusting
Rating 10 per ASTM D714 for blistering

Pencil Hardness:
Method: ASTM D3363
Result: H

IMMERSION
(Ambient temperature)
- Salt Water ..... Recommended
- Fresh Water ..... Recommended
- Potable Water ..... Recommended

Epoxy coatings may darken or yellow following application and curing.

continued on back

THE SHERWIN-WILLIAMS COMPANY

COVER THE EARTH

INDUSTRIAL & MARINE COATINGS

Industrial and Marine Coatings

NSF

Certified to ANSI/NSF 61

DURA-PLATE® 235 NSF

MULTI-PURPOSE EPOXY

PART A	B67X-235	SERIES COLORS
PART B	B67VX235	HARDENER

PRODUCT INFORMATION

RECOMMENDED SYSTEMS

Steel, immersion or atmospheric service:
2 cts. Dura-Plate 235 NSF @ 4.0 - 8.0 mils dft/ct

Steel, immersion service:
1 ct. Copoxy Shop Primer @ 3.0 - 5.0 mils dft
2 cts. Dura-Plate 235 NSF @ 4.0 - 8.0 mils dft/ct

Steel, atmospheric service:
1 ct. Dura-Plate 235 NSF @ 4.0 - 8.0 mils dft
1-2 cts. Acrolon 218 HS @ 3.0 - 6.0 mils dft/ct
or Hi-Solids Polyurethane @ 3.0 - 5.0 mils dft/ct

Concrete/Masonry, immersion service:
1 ct. Kem Cati-Coat HS Epoxy Filler/Sealer @ 10 - 20 mils dft/ct, as required to fill voids and provide a continuous substrate
2 cts. Dura-Plate 235 NSF @ 4.0 - 8.0 mils dft/ct

The systems listed above are representative of the product's use. Other systems may be appropriate.

SURFACE PREPARATION

Surface must be clean, dry, and in sound condition. Remove all oil, dust, grease, dirt, loose rust, and other foreign material to ensure good adhesion.
Refer to product Application Bulletin for detailed surface preparation information.
Minimum recommended surface preparation:

Iron & Steel:	
Atmospheric:	SSPC-SP2 or SSPC-SP12/NACE No. 5, WJ-3/SC-2
Immersion:	SSPC-SP10, 2 mil profile or SSPC-SP-12/NACE No. 5, WJ-2/SC-2
Concrete & Masonry:	
Atmospheric:	SSPC-SP13/NACE 6
Immersion:	SSPC-SP13/NACE 6-4.3.1 or 4.3.2
Galvanized, atmospheric:	SSPC-SP1

TINTING

Do not tint.

APPLICATION CONDITIONS

Temperature:	0°F minimum, 120°F maximum (air and surface) At least 5°F above dew point

Material should be at least 40°F for optimal performance.

Relative humidity:	85% maximum

Refer to product Application Bulletin for detailed application information.

ORDERING INFORMATION

Packaging:	
Part A:	1 gallon and 4 gallons in a 5 gallon container
Part B:	1 quart and 1 gallon
Weight per gallon:	11.3 ± 0.2 lb, mixed may vary with color

SAFETY PRECAUTIONS

Refer to the MSDS sheet before use.

Published technical data and instructions are subject to change without notice. Contact your Sherwin-Williams representative for additional technical data and instructions.

THE SHERWIN-WILLIAMS COMPANY

INDUSTRIAL & MARINE COATINGS

Industrial and Marine Coatings

NSF

Certified to ANSI/NSF 61

4.68A

DURA-PLATE® 235 NSF

MULTI-PURPOSE EPOXY

PART A	B67X-235	SERIES COLORS
PART B	B67VX235	HARDENER

APPLICATION BULLETIN

Revised 2/03

SURFACE PREPARATION

General Surface Preparation
Surface must be clean, dry, and in sound condition. Remove all oil, dust, grease, dirt, loose rust, and other foreign material to ensure good adhesion.

Iron & Steel, Immersion Service:
Remove all oil and grease from surface by Solvent Cleaning per SSPC-SP1. Minimum surface preparation is Near White Metal Blast Cleaning per SSPC-SP10 or SSPC-SP12/NACE No. 5. For SSPC-SP10, blast clean all surfaces using a sharp, angular abrasive for optimum surface profile (2 mils). For SSPC-SP12/NACE No. 5, all surfaces to be coated shall be cleaned in accordance with WJ-2/SC-2 standards. Pre-existing profile should be approximately 2 mils. Light rust bloom is allowed. Remove all weld spatter and round all sharp edges by grinding to a minimum 1/4" radius. Prime any bare steel the same day as it is cleaned.

Iron & Steel, Atmospheric Service:
Minimum surface preparation is Hand Tool Clean per SSPC-SP2 or SSPC-SP12/NACE No. 5. For surfaces prepared by SSPC-SP2, first remove all oil and grease from surface by Solvent Cleaning per SSPC-SP1. For better performance, use Commercial Blast Cleaning per SSPC-SP6, blast clean all surfaces using a sharp, angular abrasive for optimum surface profile (2 mils). For surfaces prepared by SSPC-SP12/NACE No. 5, all surfaces shall be cleaned in accordance with WJ-3/SC-2. Pre-existing profile should be approximately 2 mils. Prime any bare steel the same day as it is cleaned.

APPLICATION CONDITIONS

Temperature: 0°F minimum, 120°F maximum (air and surface)
At least 5°F above dew point
Material should be at least 40°F for optimal performance.

Relative humidity: 85% maximum

APPLICATION EQUIPMENT

The following is a guide. Changes in pressures and tip sizes may be needed for proper spray characteristics. Always purge spray equipment before use with listed reducer. Any reduction must be compatible with the existing environmental and application conditions.

Reducer/Clean Up ..... Reducer R7K104

Airless Spray
- Unit ..... 30:1 Pump
- Pressure ..... 2400 - 2800 psi
- Hose ..... 1/4" - 3/8" ID
- Tip ..... .015" - .019"
- Filter ..... 60 mesh
- Reduction ..... As needed, up to 10% by volume

Conventional Spray
- Gun ..... DeVilbiss MBC-510
- Fluid Tip ..... E
- Air Nozzle 704
- Atomization Pressure ... 60-65 psi
- Fluid Pressure ..... 5-15 psi
- Reduction ..... As needed, up to 10% by volume

Brush
- Brush ..... Natural Bristle
- Reduction ..... Not recommended

Roller
- Cover ..... 3/8" woven with phenolic core
- Reduction ..... Not recommended

If specific application equipment is listed above, equivalent equipment may be substituted.

continued on back

THE SHERWIN-WILLIAMS COMPANY

COVER THE EARTH

INDUSTRIAL & MARINE COATINGS

Industrial and Marine Coatings

NSF

Certified to ANSI/NSF 61

4.68A

DURA-PLATE® 235 NSF

MULTI-PURPOSE EPOXY

PART A	B67X-235	SERIES COLORS
PART B	B67VX235	HARDENER

APPLICATION BULLETIN

APPLICATION PROCEDURES

Surface preparation must be completed as indicated.

Mix contents of each component thoroughly using power agitation. Make certain no pigment remains on the bottom of the can. Then combine 4 parts by volume of Part A with 1 part by volume of Part B. Thoroughly agitate the mixture with power agitation. Allow the material to sweat-in as indicated prior to application. Re-stir before using.

If reducer solvent is used, add only after both components have been thoroughly mixed, after sweat-in.

Apply paint to the recommended film thickness and spreading rate as indicated below:

Recommended Spreading Rate per coat:

Wet mils:	6.0 - 12.0
Dry mils:	4.0 - 8.0
Coverage:	136 - 272 sq ft/gal approximate

NOTE: Brush or roll application may require multiple coats to achieve maximum film thickness and uniformity of appearance.

Drying Schedule @ 6.0 mils wet @ 50% RH:

	@ 0°F	@ 40°F	@ 77°F	@ 120°F
To touch:	18 hours	3½ hours	2 hours	20 minutes
To handle:	36 hours	12 hours	3½ hours	40 minutes
To recoat:				
minimum:	36 hours	12 hours	3½ hours	40 minutes
maximum:	6 months	6 months	6 months	6 months
Cure to service:	30 days	14 days	7 days	3 days

Drying time is temperature, humidity and film thickness dependent.

Pot Life:	16 hours	8 hours	4 hours	1 hour
Sweat-in-time:	1 hour	30 mins	15 minutes	5 minutes

If maximum recoat time is exceeded, abrade surface before recoating.

Application of coating above maximum or below minimum recommended spreading rate may adversely affect coating performance.

PERFORMANCE TIPS

Stripe coat crevices, welds, and sharp angles to prevent early failure in these areas.

When using spray application, use a 50% overlap with each pass of the gun to avoid holidays, bare areas, and pinholes. If necessary, cross spray at a right angle

Spreading rates are calculated on volume solids and do not include an application loss factor due to surface profile, roughness or porosity of the surface, skill and technique of the applicator, method of application, various surface irregularities, material lost during mixing, spillage, overthinning, climatic conditions, and excessive film build.

Excessive reduction of material can affect film build, appearance, and adhesion.

Do not mix previously catalyzed material with new.

Do not apply the material beyond recommended pot life.

In order to avoid blockage of spray equipment, clean equipment before use or before periods of extended downtime with Reducer R7K104.

Holiday Detection: Use a wet sponge-type detector such as KD Bird Dog or equivalent equipment per manufacturer's recommendation. Test only cured coating, as solvent entrapment in fresh films may provide false readings.

For **Potable Water Service**, allow a minimum cure time of 7 days @ 77°F prior to placing in service. Sterilize and rinse per AWWA C652-92.

Refer to Product Information sheet for additional performance characteristics and properties.

CLEAN UP INSTRUCTIONS

Clean spills and spatters immediately with Reducer R7K104. Clean tools immediately after use with Reducer R7K104. Follow manufacturer's safety recommendations when using any solvent.

SAFETY PRECAUTIONS

Refer to the MSDS sheet before use.

Published technical data and instructions are subject to change without notice. Contact your Sherwin-Williams representative for additional technical data and instructions.

MATERIAL SAFETY DATA SHEET

I PRODUCT IDENTIFICATION 6003

MANUFACTURER'S NAME Norchem	REGULAR TELEPHONE NO. / EMERGENCY TELEPHONE NO. 312/437-7800
ADDRESS 3100 Golf Road; Rolling Meadows, Illinois 60008	
TRADE NAME POLYETHYLENE	
SYNONYMS Same	
SHIPPING NAME[1]	DOT: Synthetic Plastics Other Than Liquid IATA: Synthetic Plastics Other Than Liquid

II HAZARDOUS INGREDIENTS[2]

MATERIAL OR COMPONENT	CAS NO.	%	HAZARD DATA
Not Applicable			

III PHYSICAL DATA

BOILING POINT, 760 MM HG	Not Applicable	MELTING POINT	~ 250°F ±20
SPECIFIC GRAVITY (H_2O = 1)	0.963	VAPOR PRESSURE	Not Applicable
VAPOR DENSITY (AIR = 1)	Not Applicable	SOLUBILITY IN H_2O % BY WT	Not Applicable
% VOLATILES BY VOL.	Not Applicable	EVAPORATION RATE (BUTYL ACETATE = 1)	NA
APPEARANCE AND ODOR	White Pellets	Ph (AS IS) Ph (1% SOLN.)	Not Applicable

IV FIRE AND EXPLOSION DATA

FLASH POINT (TEST METHOD)	~645°F Per Flammability Handbook for Plastics	AUTOIGNITION TEMPERATURE	~660°F Per Flammability Handbook

FLAMMABLE LIMITS IN AIR, % BY VOL.	NA	LOWER	NA	UPPER	NA

EXTINGUISHING MEDIA	CO_2 and/or water
SPECIAL FIRE FIGHTING PROCEDURES	NONE
UNUSUAL FIRE AND EXPLOSION HAZARD	NONE

See references 1 and 2 2. See instructions and references 1 or 8

VI REACTIVITY DATA

CONDITIONS CONTRIBUTING TO INSTABILITY

Not Applicable

MPATIBILITY

Not Applicable

HAZARDOUS DECOMPOSITION PRODUCTS

Not Applicable

CONDITIONS CONTRIBUTING TO HAZARDOUS POLYMERIZATION

Not Applicable

VII DISPOSAL, SPILL OR LEAK PROCEDURES

AQUATIC TOXICITY (E.G. 96 HR. TLM):

Not Applicable

WASTE DISPOSAL METHOD

Use normal garbage disposal methods, according to local, state, and federal regulations.

S TO BE TAKEN IF MATERIAL IS RELEASED OR SPILLED

Sweep up or pick up manually since material is non-toxic. Pellets spilled on floors, aisles, and other working surfaces may constitute a slipping hazard. Sweep, shovel or vacuum spilled pellets into containers for re-use or proper disposal.

NEUTRALIZING CHEMICALS

Not Applicable

VIII SPECIAL PROTECTION INFORMATION

VENTILATION REQUIREMENTS

Not Applicable

PECIFIC PERSONAL PROTECTIVE EQUIPMENT

RESPIRATORY (SPECIFY IN DETAIL) Not Applicable

EYE

Not Applicable

GLOVES

Not Applicable

THER CLOTHING AND EQUIPMENT

Not Applicable

January, 2000

MATERIAL SAFETY DATA SHEET

PRODUCT IDENTITY: ANTHRACITE COAL

SECTION I

LANG FILTER MEDIA CO.
603 S. Church Street/Rt. 309
Hazleton, PA 18201

Emergency/Information
Telephone: 570-459-7005
Effective Date: 1/4/00

SECTION II
HAZARDOUS INGREDIENTS/IDENTITY INFORMATION

Hazardous Components:

Occupational Exposure

Chemical Name	Trade Name	CAS	OSHA/PEL	ACCIH/TLV
ANTHRACITE	COAL	8029-10-5	2mg/M3	

SECTION III
PHYSICAL/CHEMICAL CHARACTERISTICS

Boiling Point:	N/A	Specific Gravity:	1.6 +/-.05
Vapor Pressure:	N/A	Melting Point:	N/A
Vapor Density:	N/A	Evaporation Rate	
Solubility in Water:	N/A	(Butyl Acetate = 1)	N/A
Appearance:	Fine particles - black in color		
Odor:	None		

COMPANY NAME: ARKHOLA SAND & GRAVEL CO TO:
ADDRESS: PO BOX 1627, 523 GARRISON, FT SMITH, ARK
TELEPHONE: 501/785-4271
EMERGENCY TELEPHONE: 501/785-4271

MATERIAL SAFETY DATA SHEET

THIS MSDS MEETS THE CRITERIA OF THE FEDERAL HAZARD COMMUNICATION RULE 29 CFR PART 1910.1200 DATE REVISED: 10/99

I. PRODUCT IDENTITY: Sand

Product Class: Crystalline Silica or quartz

II. HAZARDOUS INGREDIENTS

Hazardous Chemical(s)

Chemical name//Common names	OSHA PEL	ACGIH TLV	%	CAS No.
Quartz, crystalline silica sand	10 mg/m^3 (R)	0.1 mg/m^3 (R)	100	14808-60-7

III. PHYSICAL CHARACTERISTICS (N/A indicates information not applicable to this product)

Appearance and odor: Rounded, smooth or angular, colorless, clear particles. May have tinge of color due to contaminants.

Melting point (degrees Celsius):	N/A
Boiling point (degrees Celsius) at 760 mm Hg:	N/A
Specific gravity (H_2O = 1):	Greater than water
Vapor pressure, mmHg:	N/A
Vapor density (AIR = 1):	N/A
Solubility in water:	Insoluble
Evaporation rate (Butyl Acetate = 1):	N/A
pH:	N/A

MEDICAL CONDITIONS AGGRAVATED BY EXPOSURE TO THE CHEMICAL: -- Pre-existing lung conditions.

EMERGENCY AND FIRST AID PROCEDURES:

INHALATION -- Remove to fresh air. Encourage coughing, spitting and nose-blowing.

SKIN CONTACT -- Can be removed from skin with soap and water.

EYE CONTACT -- Flush with large amounts of water.

INGESTION -- Due to the nature of the material, it is very unlikely that it could be taken internally.

PROTECTION AND CONTROL INFORMATION

WORK/HYGIENIC PRACTICES -- Minimize dust exposure. Use wet methods to reduce dust exposure.

VENTILATION REQUIREMENTS -- Provide local exhaust ventilation where possible or other controls such as enclosed cabs to maintain exposure below TLVs.

PERSONAL PROTECTIVE EQUIPMENT RESPIRATORY -- If overexposure may occur, a NIOSH/MESA approved cartridge respirator for dusts is advised in absence of proper engineering controls. Persons not wearing appropriate respiratory protection equipment should be excluded from the area during loading, unloading, sand blasting, or dust generating operations.

EYES -- Wear safety glasses or face shields.

GLOVES -- If manual handling of sand occurs, leather gloves are recommended to protect skin from abrasion.

OTHER CLOTHING AND EQUIPMENT -- Normal work clothing covering arms and legs.

EMERALD CREEK GARNET

Making Our Environment Cleaner

MATERIAL SAFETY DATA SHEET

Complies with 29 CFR 1910.1200

IDENTITY (As Used on Label and List)

Emerald Creek Garnet Abrasive Grains and Powders

SECTION I

Manufacturer's Name: EMERALD CREEK GARNET COMPANY

Emergency Telephone Number: (208) 245-2096

Address (Street, City, State, Zip Code): P.O. Box 190, Fernwood, ID 83830

Telephone Number Information: (208) 245-2096

January 15, 1995

L.E. Gorrill 1/15/95

SECTION II - Hazardous Ingredients / Identity Information

Hazardous Components:
Specific Chemical Identity: OSHA PEL ACGIH TLV Other Limits Recommended %(Optional)

Emerald Creek Garnet is a natural mixture of almandite garnet - $Fe_3Al_2(SiO_4)_3$ with Mg and Mn in partial substitution for Fe in the formula, and other minerals. The following substances are present and are regulated by OSHA or ACGIH limits: CAS # 1302-62-1

SUBSTANCE	WT. %	OSHA/ACGIH LIMIT IN USE*
Nuisance dust	na	15 mg/cu.m.
Respirable dust	na	5 mg/cu.m.
Crystalline silica	<0.10%	0.10 mg/cu.m.

* If these levels are exceeded respiratory protection must be employed.

SECTION III - Physical and Chemical Characteristics

Melting Point: Circa 1315° C

Specific Gravity (H_2 = 1.0): 4.0 - 4.1

Solubility in Water: Insoluble

Appearance and Odor: Deep red to pink color; no odor

SECTION IV - FIRE AND EXPLOSION HAZARD DATA

Flash point (Method Used)	Flammable Limits	LEL	UEL
Material is a non-flammable solid	not applicable	na	na

Extinguishing media

Use extinguishing media appropriate for the surrounding fire.

Special Fire Fighting Procedures

As appropriate to the surrounding fire. Firefighters should be protected from nuisance dust.

Unusual Fire and Explosion Hazards

None

2615 N. 4th Street #667
Coeur d'Alene, Idaho 83814

Telephone: (208) 666-6000
Fax: (208) 666-4000

PARTS INFORMATION

anchor scientific inc.
Box 378, Long Lake, MN 55356 / 612-473-7115 / FAX 612-473-6002

roto-float
Type P-Pipe Mounted
Form 2750-B

TYPE P

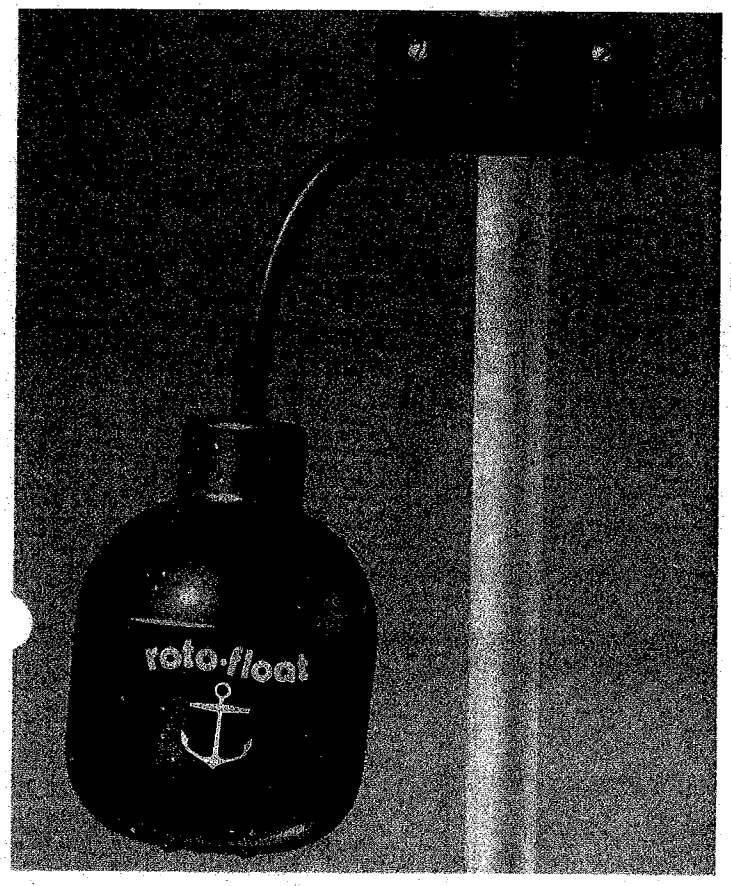

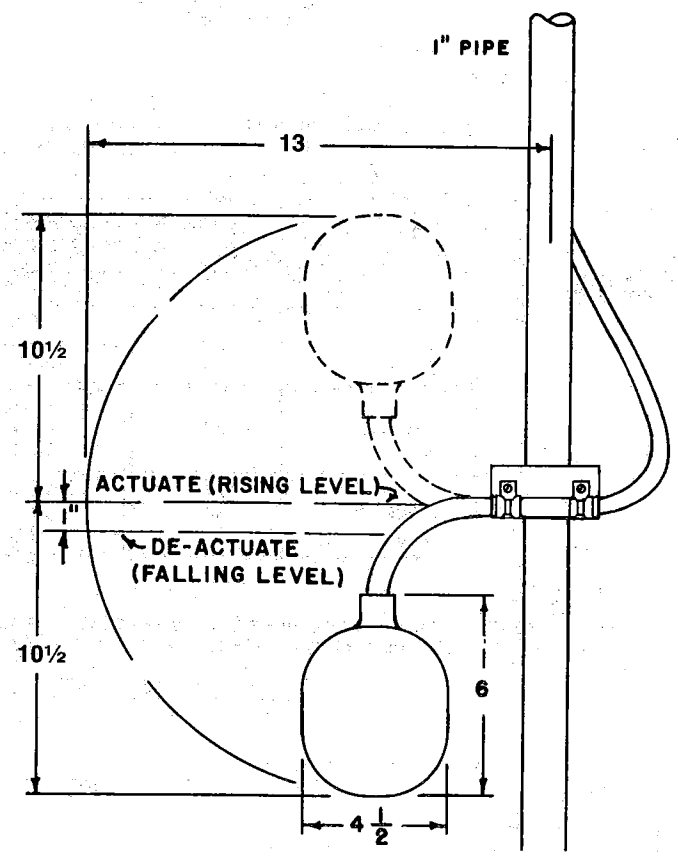

The ROTO-FLOAT is a direct acting float switch. Each ROTO-FLOAT contains a single pole mercury switch which acutates when the longitudinal axis of the float is horizontal, and deactuates when the liquid level falls 1" below the actuation elevation.

The float is a chemical resistant polypropylene casing with a firmly bonded electrical cable protruding. One end of the cable is permanently connected to the enclosed mercury switch and the entire assembly is encapsulated to form a completely water tight and impact resistant unit.

ROTO-FLOATS can be mounted on a support pipe (type P) or suspended from above (type S). Advantages of the ROTO-FLOAT are low cost, simplicity and reliability.

UL Listed
- Pilot Duty
- Industrial Control Equipment

CABLE

P.V.C. type STO #18 conductors (41 strand) rated 600 volts • Various lengths available • See table of models • Non-standard lengths also available on special order.

MATERIALS OF CONSTRUCTION

Float housing.....Polypropylene
Cable clamp.....Polypropylene
Cable jacket..... P.V.C.

Switch Arrangement	Cable Length	Pipe Mounted Type P Model No.	Ship Wt.
Normally Open	20	P20NO	2#
	30	P30NO	2 3/4#
	40	P40NO	3 1/2#
Normally Closed	20	P20NC	2#
	30	P30NC	2 3/4#
	40	P40NC	3 1/2#

Effective 4/93

GENERAL DESCRIPTION:

THE ROTO-FLOAT IS A DIRECT ACTING FLOAT SWITCH. EACH ROTO-FLOAT CONTAINS A SINGLE POLE MERCURY SWITCH WHICH ACTUATES WHEN THE LONGITUDINAL AXIS OF THE FLOAT IS HORIZONTAL, AND DEACTUATES WHEN THE LIQUID FALLS 1" BELOW THE ACTUATION ELEVATION.

THE FLOAT IS A CHEMICAL RESISTANT POLPROPYLENE CASING WITH A FIRMLY BONDED ELECTRICAL CABLE PROTRUDING. ONE END OF THE CABLE IS PERMANENTLY CONNECTED TO THE GLASS ENCLOSED MERCURY SWITCH AND THE ENTIRE ASSEMBLY IS ENCAPSULATED TO FORM A COMPLETELY WATER TIGHT AND IMPACT RESISTANT UNIT.

ROTO-FLOATS CAN BE MOUNTED ON A SUPPORT PIPE, (TYPE P); OR SUSPENDED FROM ABOVE, (TYPE S). ADVANTAGES OF THE ROTO-FLOAT ARE LOW COST, SIMPLICITY AND RELIABILITY. VARIOUS CIRCUIT CONFIGURATIONS, OTHER THAN THE ONES LISTED BELOW, ARE AVAILABLE.

SPECIFICATIONS:

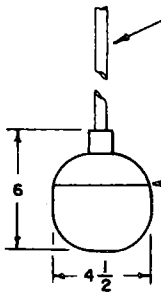

PVC TYPE STO, 2 - #18 AWG 41 STRAND 600V, 60 C CONDUCTORS 20', 30', 40' LENGTHS STANDARD, OTHER LENGTHS AVAILABLE. UL & CSA LISTED.

POLYPROPYLENE CASING CONTAINS HERMETICALLY SEALED MERCURY SWITCH.

USE: N.O. FOR PUMP OUT
N.C. FOR PUMP IN

- UL LISTED, IND. CONT. EQ.
  PILOT DUTY
  4.5 AMPS 120 VAC
  2.25 AMPS 240 VAC
- FLOAT COLOR
  N.O., BLACK
  N.C., RED
- MOUNTING ARRANGEMENT
  TYPE P - PIPE MOUNTED MODEL INCLUDES POLYPROPYLENE CLAMP

  TYPE S - SUSPENDED MODEL WITH STABILIZING WEIGHT.

MODELS:

SWITCH ARRANGEMENT	CABLE LENGTH	SUSPENDED TYPE S		PIPE MOUNTED TYPE P	
		MODEL NO.	SHIP WT.	MODEL NO.	SHIP WT.
NORMALLY OPEN	20	S20NO	4#	P20NO	2#
	30	S30NO	4 ½#	P30NO	2 ¾#
	40	S40NO	5 ¼#	P40NO	3 ½#
NORMALLY CLOSED	20	S20NC	4#	P20NC	2#
	30	S30NC	4 ½#	P30NC	2 ¾#
	40	S40NC	5 ¼#	P40NC	3 ½#

APPLICATIONS:

FOR USE IN CONTROLLING PUMPS OR OTHER MACHINES AND MEASURING ALARM LEVELS IN WATER, SEWAGE AND MANY OTHER LIQUIDS. ROTO-FLOATS MAY BE USED FOR PUMP IN OR PUMP OUT CONTROL, FOR LOW LEVEL CUTOUT, OR FOR LOW AND HIGH LEVEL ALARMS.

TYPICAL 2 PUMP CIRCUITS

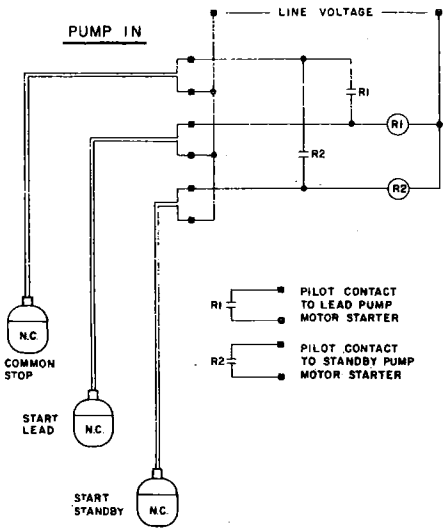

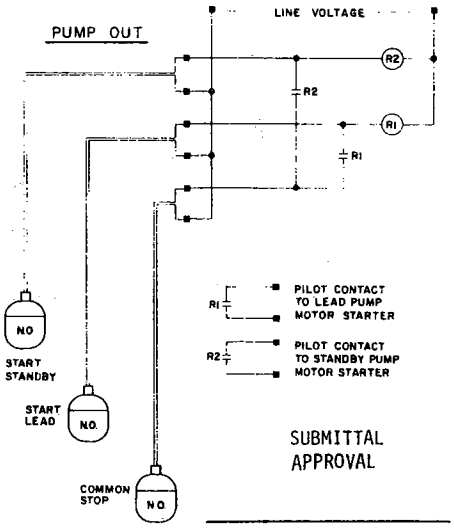

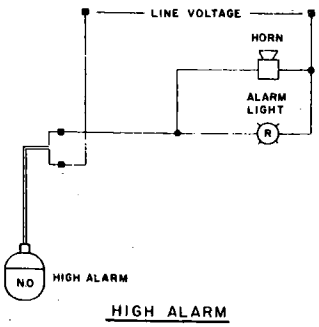

HIGH ALARM

TYPICAL MOUNTING

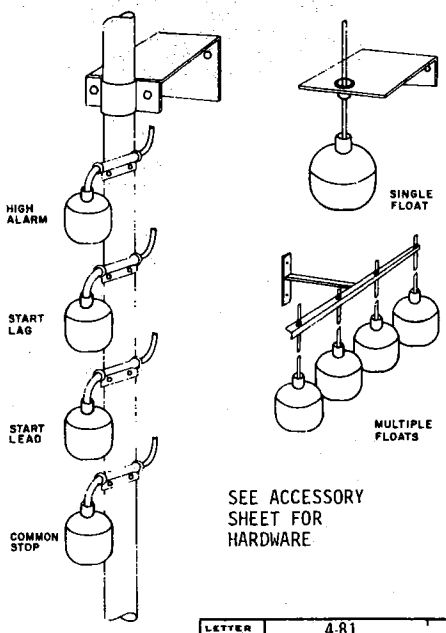

SEE ACCESSORY SHEET FOR HARDWARE

SUBMITTAL APPROVAL

NAME

DATE

IMPORTANT NOTE: Use in accordance with local electrical code and authority having jurisdiction. Do not use Roto-Floats in gasoline, volatiles or other combustibles.

This product contains mercury. Dispose of in accordance with Local, State and Federal Regulations so that mercury does not contaminate the environment.

DWN BY PD	DATE 1-9-74	
CKD BY JA	DATE 1-9-74	
APPD BY DS	DATE 4-30-76	
PROJECT NAME ROTO-FLOAT		
FACTORY ORDER NO.		

LETTER A — 4-81 REVISIONS

anchor scientific inc.
Box 378, Long Lake, MN 55356
612/473-7115

SPECIFICATION DATA SUBMITTAL AND INSTRUCTION SHEET

DWG. NO. 174-4

ASCO® Red-Hat®

Pilot Operated

General Service Solenoid Valves

Brass or Stainless Steel Bodies

3/8" to 2 1/2" NPT

NC

NO

2/2 SERIES 8210

Features

- Wide range of pressure ratings, sizes, and resilient materials provide long service life and low internal leakage.
- High Flow Valves for liquid, corrosive, and air/inert gas service.
- Industrial applications include:
  - Car wash
  - Laundry equipment
  - Air compressors
  - Industrial water control
  - Pumps

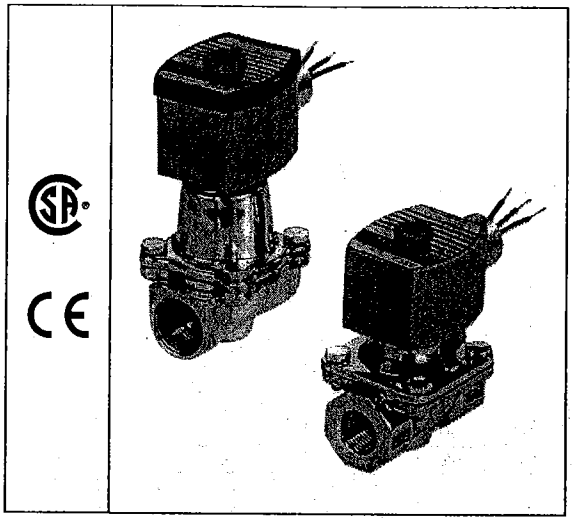

Construction

Valve Parts in Contact with Fluids		
Body	Brass	304 Stainless Steel
Seals and Discs	NBR or PTFE	
Disc-Holder	PA	
Core Tube	305 Stainless Steel	
Core and Plugnut	430F Stainless Steel	
Springs	302 Stainless Steel	
Shading Coil	Copper	Silver

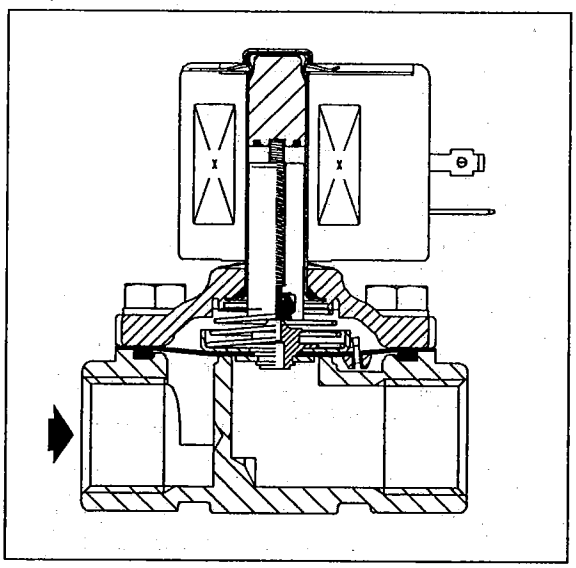

Electrical

Standard Coil and Class of Insulation	Watt Rating and Power Consumption				Spare Coil Part Number			
	DC	AC			General Purpose		Explosionproof	
	Watts	Watts	VA Holding	VA Inrush	AC	DC	AC	DC
F	-	6.1	16	40	238210	-	238214	-
F	11.6	10.1	25	70	238610	238710	238614	238714
F	16.8	16.1	35	180	272610	97617	272614	97617
F	-	17.1	40	93	238610	-	238614	-
F	-	20	43	240	99257	-	99257	-
F	-	20.1	48	240	272610	-	272614	-
H	30.6	-	-	-	-	74073	-	74073
F	40.6	-	-	-	-	238910		238914

Standard Voltages: 24, 120, 240, 480 volts AC, 60 Hz (or 110, 220 volts AC, 50 Hz). 6, 12, 24, 120, 240 volts DC. Must be specified when ordering. Other voltages available when required.

Solenoid Enclosures

Standard: Red-Hat II - Watertight, Types 1, 2, 3, 3S, 4, and 4X; Red-Hat - Type I.
Optional: Red-Hat II - Explosionproof and Watertight, Types 3, 3S, 4, 4X, 6, 6P, 7, and 9; Red-Hat - Explosionproof and Watertight, Types 3, 4, 4X, 7, and 9.
(To order, add prefix "EF" to catalog number, except Catalog Numbers 8210B57, 8210B58, and 8210B59. Valves not available with Explosionproof enclosures.)
See Optional Features Section for other available options.

Nominal Ambient Temperature Ranges:

Red-Hat II/
Red-Hat AC: 32°F to 125°F (0°C to 52°C)
Red-Hat II DC: 32°F to 104°F (0°C to 40°C)
Red-Hat DC: 32°F to 77°F (0°C to 25°C)
(104°F/40°C occasionally)
Refer to Engineering Section for details.

Approvals:

CSA certified. Red-Hat II meets applicable CE directives.
Refer to Engineering Section for details.

ASCO®

Specifications (English units)

Pipe Size (Ins.)	Orifice Size (Ins.)	Cv Flow Factor	Operating Pressure Differential (psi) Min.	Max. AC Air-Inert Gas	Max. AC Water	Max. AC Light Oil @ 300 SSU	Max. DC Air-Inert Gas	Max. DC Water	Max. DC Light Oil @ 300 SSU	Max. Fluid Temp. °F AC	Max. Fluid Temp. °F DC	Brass Body Catalog Number	Brass Body Constr. Ref. No. ④	Brass Body UL ⑤ Listing	Stainless Steel Body Catalog Number	Stainless Steel Body Constr. Ref. No. ④	Stainless Steel Body UL ⑤ Listing	Watt Rating/ Class of Coil Insulation ⑦ AC	Watt Rating/ Class of Coil Insulation ⑦ DC
NORMALLY CLOSED (Closed when de-energized), NBR or PTFE ② Seating																			
3/8	3/8	1.5	①	150	125	-	40	40	-	180	150	8210G73 ③	1P	●	8210G36 ③	1P	●	6.1/F	11.6/F
3/8	5/8	3	0	150	150	-	40	40	-	180	150	8210G93	5D	○	-	-	-	10.1/F	11.6/F
3/8	5/8	3	5	200	150	135	125	100	100	180	150	8210G1	6D	○	-	-	-	6.1/F	11.6/F
3/8	5/8	3	5	300	300	300	-	-	-	175	-	8210G6	5D	○	-	-	-	17.1/F	-
1/2	7/16	2.2	①	150	125	-	40	40	-	180	150	8210G15 ③	2P	●	8210G37 ③	2P	●	6.1/F	11.6/F
1/2	5/8	4	0	150	150	-	40	40	-	180	150	8210G94	5D	○	-	-	-	10.1/F	11.6/F
1/2	5/8	4	0	150	150	125	40	40	-	175	150	-	-	-	8210G87	7D	●	17.1/F	11.6/F
1/2	5/8	4	5	200	150	135	125	100	100	180	150	8210G2	6D	○	-	-	-	6.1/F	11.6/F
1/2	5/8	4	5	300	300	300	-	-	-	175	-	8210G7	5D	○	-	-	-	17.1/F	-
1/2	5/8	4	5	300	300	-	300	300	-	180	125	8210G227	5D	○	-	-	-	17.1/F	40.6/H
3/4	5/8	4.5	0	150	150	125	40	40	-	175	150	-	-	-	8210G88	7D	●	17.1/F	11.6/F
3/4	3/4	5	5	125	125	125	100	90	75	180	150	8210G9	9D	○	-	-	-	6.1/F	11.6/F
3/4	3/4	5	0	150	150	-	40	40	-	180	150	8210G95	8D	○	-	-	-	10.1/F	11.6/F
3/4	3/4	6.5	5	250	150	100	125	125	125	180	150	8210G3	11D	○	-	-	-	6.1/F	11.6/F
3/4	3/4	6	0	-	-	-	200	180	180	-	77	8210B26 ② ‡	10P	-	-	-	-	-	30.6/H
3/4	3/4	6	0	350	300	200	-	-	-	200	-	8210G26 ② ‡	40P	●	-	-	-	16.1F	-
1	1	13	0	-	-	-	100	100	80	-	77	8210B54 ‡	31D	-	8210D89	15D	-	-	30.6/H
1	1	13	0	150	125	125	-	-	-	180	-	8210G54	41D	●	8210G89	45D	●	16.1/F	-
1	1	13	5	150	150	100	125	125	125	180	150	8210G4	12D	○	-	-	-	6.1/F	11.6/F
1	1	13.5	0	300	225	115	-	-	-	200	-	8210G27 ‡	42P	●	-	-	-	20.1/F	-
1	1	13.5	10	300	300	300	-	-	-	175	-	8210G78 ②	13P	-	-	-	-	17.1/F	-
1 1/4	1 1/8	15	0	-	-	-	100	100	80	-	77	8210B55 ‡	32D	-	-	-	-	-	30.6/H
1 1/4	1 1/8	15	0	150	125	125	-	-	-	180	-	8210G55	43D	●	-	-	-	16.1/F	-
1 1/4	1 1/8	15	5	150	150	100	125	125	125	180	150	8210G8	16D	○	-	-	-	6.1/F	11.6/F
1 1/2	1 1/4	22.5	0	-	-	-	100	100	80	-	77	8210B56 ‡	33D	-	-	-	-	-	30.6/H
1 1/2	1 1/4	22.5	0	150	125	125	-	-	-	180	-	8210G56 ‡	44D	●	-	-	-	16.1/F	-
1 1/2	1 1/4	22.5	5	150	150	100	125	125	125	180	150	8210G22	18D	●	-	-	-	6.1/F	11.6/F
2	1 3/4	43	5	150	125	90	50	50	50	180	150	8210G100	20P	●	-	-	-	6.1/F	11.6/F
2 1/2	1 3/4	45	5	150	125	90	50	50	50	180	150	8210G101	21P	●	-	-	-	6.1/F	11.6/F
NORMALLY OPEN (Open when de-energized), NBR Seating (PA Disc-Holder, except as noted)																			
3/8	5/8	3	0	150	150	125	125	125	80	180	150	8210G33	23D	●	-	-	-	10.1/F	11.6/F
3/8	5/8	3	5	250	200	200	250	200	200	180	180	8210G11 ⑧ ⑨	39D	●	-	-	-	10.1/F	11.6/F
1/2	5/8	4	0	150	150	125	125	125	80	180	150	8210G34	23D	●	-	-	-	10.1/F	11.6/F
1/2	5/8	3	0	150	150	100	125	125	80	180	150	-	-	-	8210G30	37D	●	10.1/F	11.6/F
1/2	5/8	4	5	250	200	200	250	200	200	180	180	8210G12 ⑧ ⑨	39D	●	-	-	-	10.1/F	11.6/F
3/4	3/4	5.5	0	150	150	125	125	125	80	180	150	8210G35	25D	●	-	-	-	10.1/F	11.6/F
3/4	5/8	3	0	150	150	100	125	125	80	180	150	-	-	-	8210G38	38D	●	10.1/F	11.6/F
3/4	3/4	6.5	5	-	-	-	250	200	200	-	180	8210C13	24D	●	-	-	-	-	16.8/F
3/4	3/4	6.5	5	250	200	200	-	-	-	180	-	8210G13	46D	●	-	-	-	16.1/F	-
1	1	13	0	125	125	125	-	-	-	180	-	8210B57 ⑥ ⑩	34D	●	-	-	-	20/F	-
1	1	13	5	-	-	-	125	125	125	-	180	8210D14	26D	●	-	-	-	-	16.8/F
1	1	13	5	150	150	125	-	-	-	180	-	8210G14	47D	●	-	-	-	16.1/F	-
1 1/4	1 1/8	15	0	125	125	125	-	-	-	180	-	8210B58 ⑥ ⑩	35D	●	-	-	-	20/F	-
1 1/4	1 1/8	15	5	-	-	-	125	125	125	-	180	8210D18	28D	●	-	-	-	-	16.8/F
1 1/4	1 1/8	15	5	150	150	125	-	-	-	180	-	8210G18	48D	●	-	-	-	16.1/F	-
1 1/2	1 1/4	22.5	0	125	125	125	-	-	-	180	-	8210B59 ⑥ ⑩	36D	●	-	-	-	20/F	-
1 1/2	1 1/4	22.5	5	-	-	-	125	125	125	-	180	8210D32	29D	●	-	-	-	-	16.8/F
1 1/2	1 1/4	22.5	5	150	150	125	-	-	-	180	-	8210G32	49D	●	-	-	-	16.1/F	-
2	1 3/4	43	5	-	-	-	125	125	125	-	150	8210103	30P	●	-	-	-	-	16.8/F
2	1 3/4	43	5	125	125	125	-	-	-	180	-	8210G103	50P	●	-	-	-	16.1/F	-
2 1/2	1 3/4	45	5	-	-	-	125	125	125	-	150	8210104	27P	●	-	-	-	-	16.8/F
2 1/2	1 3/4	45	5	125	125	125	-	-	-	180	-	8210G104	51P	●	-			16.1/F	-

Notes:
① 5 psi on Air; 1 psi on Water.
② Valve provided with PTFE main disc.
③ Valve includes Ultem (G.E. trademark) piston.
④ Letter "D" denotes diaphragm construction; "P" denotes piston construction.
⑤ ○ Safety Shutoff Valve; ● General Purpose Valve. Refer to Engineering Section (Approvals) for details.
⑥ Valves not available with Explosionproof enclosures.
⑦ On 50 hertz service, the watt rating for the 6.1/F solenoid is 8.1 watts.
⑧ AC construction also has PA seating.
⑨ No disc-holder.
⑩ Stainless Steel disc-holder.
‡ Must have solenoid mounted vertical and upright.

ASCO®

Specifications (Metric units)

Pipe Size (ins.)	Orifice Size (mm)	Kv Flow Factor (m3/h)	Operating Pressure Differential (bar) Min.	Max. AC Air-Inert Gas	Max. AC Water	Max. AC Light Oil @ 300 SSU	Max. DC Air-Inert Gas	Max. DC Water	Max. DC Light Oil @ 300 SSU	Max.Fluid Temp. °C AC	Max.Fluid Temp. °C DC	Brass Body Catalog Number	Brass Body Constr. Ref. No. ④	Brass Body UL ⑤ Listing	Stainless Steel Body Catalog Number	Stainless Steel Body Constr. Ref. No. ④	Stainless Steel Body UL ⑤ Listing	Watt Rating/ Class of Coil Insulation ⑦ AC	Watt Rating/ Class of Coil Insulation ⑦ DC
NORMALLY CLOSED (Closed when de-energized), NBR or PTFE ② Seating																			
3/8	10	1.29	①	10	9	-	3	3	-	81	65	8210G73 ③	1P	●	8210G36 ③	1P	●	6.1/F	11.6/F
3/8	16	2.57	0	10	10	-	3	3	-	81	65	8210G93	5D	○	-	-	-	10.1/F	11.6/F
3/8	16	2.57	0.3	14	10	9	9	7	7	81	65	8210G1	6D	○	-	-	-	6.1/F	11.6/F
3/8	16	2.57	0.3	21	21	21	-	-	-	79	-	8210G6	5D	○	-	-	-	17.1/F	-
1/2	11	1.89	①	10	9	-	3	3	-	81	65	8210G15 ③	2P	●	8210G37 ③	2P	●	6.1/F	11.6/F
1/2	16	3.43	0	10	10	-	3	3	-	81	65	8210G94	5D	○	-	-	-	10.1/F	11.6/F
1/2	16	3.43	0	10	10	9	3	3	-	79	65	-	-	-	8210G87	7D	●	17.1/F	11.6/F
1/2	16	3.43	0.3	14	10	9	9	7	7	81	65	8210G2	6D	○	-	-	-	6.1/F	11.6/F
1/2	16	3.43	0.3	21	21	21	-	-	-	79	-	8210G7	5D	○	-	-	-	17.1/F	-
1/2	16	3.43	0.3	21	21	-	21	21	-	81	52	8210G227	5D	○	-	-	-	17.1/F	40.6F
3/4	16	3.86	0	10	10	9	3	3	-	79	65	-	-	-	8210G88	7D	●	17.1/F	11.6/F
3/4	19	4.29	0.3	9	9	9	7	6	5	81	65	8210G9	9D	○	-	-	-	6.1/F	11.6/F
3/4	19	4.29	0	10	10	-	3	3	-	81	65	8210G95	8D	○	-	-	-	10.1/F	11.6/F
3/4	19	5.57	0.3	17	10	7	9	9	9	81	65	8210G3	11D	○	-	-	-	6.1/F	11.6/F
3/4	19	5.14	0	-	-	-	14	12	12	-	25	8210B26 ② ‡	10P	-	-	-	-	-	30.6/H
3/4	19	5.14	0	24	21	14	-	-	-	92	-	8210G26 ② ‡	40P	●	-	-	-	16.1F	-
1	25	11.14	0	-	-	-	7	7	6	-	25	8210B54 ‡	31D	-	8210D89	15D	-	-	30.6/H
1	25	11.14	0	10	9	9	-	-	-	81	-	8210G54	41D	●	8210G89	45D	●	16.1/F	-
1	25	11.14	0.3	10	10	7	9	9	9	81	65	8210G4	12D	○	-	-	-	6.1/F	11.6/F
1	25	11.57	0	21	16	8	-	-	-	92	-	8210G27 ‡	42P	●	-	-	-	20.1/F	-
1	25	11.57	0.7	21	21	21	-	-	-	79	-	8210G78 ②	13P	-	-	-	-	17.1/F	-
1 1/4	29	12.86	0	-	-	-	7	7	6	-	25	8210B55 ‡	32D	-	-	-	-	-	30.6/H
1 1/4	29	12.86	0	10	9	9	-	-	-	81	-	8210G55	43D	●	-	-	-	16.1/F	-
1 1/4	29	12.86	0.3	10	10	7	9	9	9	81	65	8210G8	16D	○	-	-	-	6.1/F	11.6/F
1 1/2	32	19.29	0	-	-	-	7	7	6	-	25	8210B56 ‡	33D	-	-	-	-	-	30.6/H
1 1/2	32	19.29	0	10	9	9	-	-	-	81	-	8210G56 ‡	44D	●	-	-	-	16.1/F	-
1 1/2	32	19.29	0.3	10	10	7	9	9	9	81	65	8210G22	18D	●	-	-	-	6.1/F	11.6/F
2	44	36.86	0.3	10	9	6	3	3	3	81	65	8210G100	20P	●	-	-	-	6.1/F	11.6/F
2 1/2	44	38.57	0.3	10	9	6	3	3	3	81	65	8210G101	21P	●	-	-	-	6.1/F	11.6/F
NORMALLY OPEN (Open when de-energized), NBR Seating (PA Disc-Holder, except as noted)																			
3/8	16	2.57	0.0	10	10	9	9	9	6	81	65	8210G33	23D	●	-	-	-	10.1/F	11.6/F
3/8	16	2.57	0.3	17	14	14	17	14	14	81	81	8210G11 ⑧ ⑨	39D	●	-	-	-	10.1/F	11.6/F
1/2	16	3.43	0	10	10	9	9	9	6	81	65	8210G34	23D	●	-	-	-	10.1/F	11.6/F
1/2	16	2.57	0	10	10	7	9	9	6	81	65	-	-	-	8210G30	37D	●	10.1/F	11.6/F
1/2	16	3.43	0.3	17	14	14	17	14	14	81	81	8210G12 ⑧ ⑨	39D	●	-	-	-	10.1/F	11.6/F
3/4	19	4.71	0	10	10	9	9	9	6	81	65	8210G35	25D	●	-	-	-	10.1/F	11.6/F
3/4	16	2.57	0	10	10	7	9	9	6	81	65	-	-	-	8210G38	38D	●	10.1/F	11.6/F
3/4	19	5.57	0.3	-	-	-	17	14	14	-	81	8210C13	24D	●	-	-	-	-	16.8/F
3/4	19	5.57	0.3	17	14	14	-	-	-	81	-	8210G13	46D	●	-	-	-	16.1/F	-
1	25	11.14	0	9	9	9	-	-	-	81	-	8210B57 ⑥ ⑩	34D	●	-	-	-	20/F	-
1	25	11.14	0.3	-	-	-	9	9	9	-	81	8210D14	26D	●	-	-	-	-	16.8/F
1	25	11.14	0.3	10	10	9	-	-	-	81	-	8210G14	47D	●	-	-	-	16.1/F	-
1 1/4	29	12.86	0	9	9	9	-	-	-	81	-	8210B58 ⑥ ⑩	35D	●	-	-	-	20/F	-
1 1/4	29	12.86	0.3	-	-	-	9	9	9	-	81	8210D18	28D	●	-	-	-	-	16.8/F
1 1/4	29	12.86	0.3	10	10	9	-	-	-	81	-	8210G18	48D	●	-	-	-	16.1/F	-
1 1/2	32	19.29	0	9	9	9	-	-	-	81	-	8210B59 ⑥ ⑩	36D	●	-	-	-	20/F	-
1 1/2	32	19.29	0.3	-	-	-	9	9	9	-	81	8210D32	29D	●	-	-	-	-	16.8/F
1 1/2	32	19.29	0.3	10	10	9	-	-	-	81	-	8210G32	49D	●	-	-	-	16.1/F	-
2	44	36.86	0.3	-	-	-	9	9	9	-	65	8210103	30P	●	-	-	-	-	16.8/F
2	44	36.86	0.3	9	9	9	-	-	-	81	-	8210G103	50P	●	-	-	-	16.1/F	-
2 1/2	44	38.57	0.3	-	-	-	9	9	9	-	65	8210104	27P	●	-	-	-	-	16.8/F
2 1/2	44	38.57	0.3	9	9	9	-	-	-	81	-	8210G104	51P	●	-	-	-	16.1/F	-

Notes:
① 0.3 bar on Air; 0.0 bar on Water.
② Valve provided with PTFE main disc.
③ Valve includes Ultem (G.E. trademark) piston.
④ Letter "D" denotes diaphragm construction; "P" denotes piston construction.
⑤ ○ Safety Shutoff Valve; ● General Purpose Valve.
Refer to Engineering Section (Approvals) for details.
⑥ Valves not available with Explosionproof enclosures.
⑦ On 50 hertz service, the watt rating for the 6.1/F solenoid is 8.1 watts.
⑧ AC construction also has PA seating.
⑨ No disc-holder.
⑩ Stainless Steel disc-holder.
‡ Must have solenoid mounted vertical and upright.

ASCO®

Dimensions: inches (mm)

Constr. Ref. No.		H	K	L	P	W
1*	ins.	3.85	3.00	1.91	3.41	1.69
	mm	98	76	49	87	43
2*	ins.	4.17	3.25	2.28	3.63	1.69
	mm	106	83	58	92	43
13	ins.	4.44	3.22	3.75	4.19	5.81
	mm	113	82	95	106	147
5	ins.	3.84	2.31	2.75	3.28	2.28
	mm	98	59	70	83	58
6*	ins.	3.38	1.94	2.75	2.80	2.28
	mm	86	49	70	71	58
7	ins.	4.19	2.50	2.81	3.47	2.39
	mm	106	64	71	88	61
8	ins.	4.13	2.47	2.81	3.44	2.29
	mm	105	63	71	87	58
9*	ins.	3.66	2.10	2.81	2.96	2.28
	mm	93	53	71	75	58
10*①	ins.	5.25	X	2.81	4.59	2.31
	mm	133	X	71	117	59
11*	ins.	4.16	2.66	3.84	3.52	2.75
	mm	106	68	98	89	70
12	ins.	5.64	3.15	3.75	4.01	3.36
	mm	143	80	95	102	85
15*	ins.	5.34	X	3.75	4.47	3.84
	mm	136	X	95	114	98
16	ins.	5.64	3.15	3.66	4.01	3.56
	mm	143	80	93	102	90
18	ins.	6.11	3.30	4.38	4.16	3.92
	mm	155	84	111	106	100
20*	ins.	7.33	3.71	5.06	4.57	4.87
	mm	186	94	129	116	124
21*	ins.	7.33	3.71	5.50	4.57	4.87
	mm	186	94	140	116	124
23	ins.	4.35	2.65	2.75	3.79	2.28
	mm	110	67	70	96	58
24	ins.	5.06	X	3.78	4.44	2.75
	mm	129	X	96	113	70
25	ins.	4.64	2.81	2.81	3.94	2.28
	mm	118	71	71	100	58
26	ins.	6.53	X	3.75	4.91	3.19
	mm	166	X	95	125	81
27	ins.	8.22	X	5.50	5.47	4.87
	mm	209	X	140	139	124
28	ins.	6.53	X	3.66	4.91	3.19
	mm	166	X	93	125	81
29	ins.	7.03	X	4.38	5.06	4.40
	mm	179	X	111	129	112

① Valves must be mounted with solenoid vertical and upright.
* DC dimensions slightly larger.

Constr. Refs. 1, 2

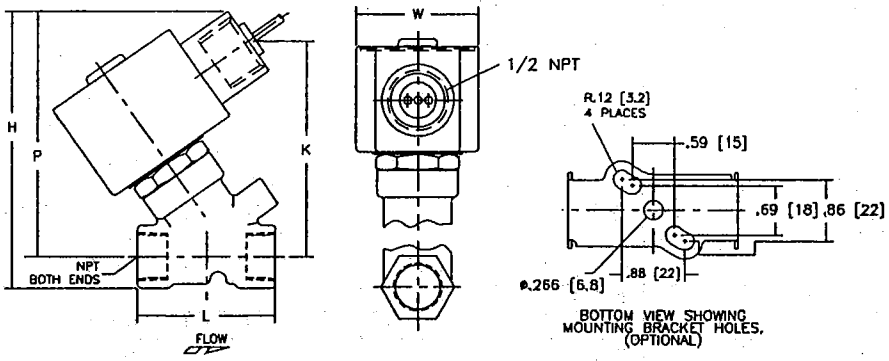

Constr. Ref. 13

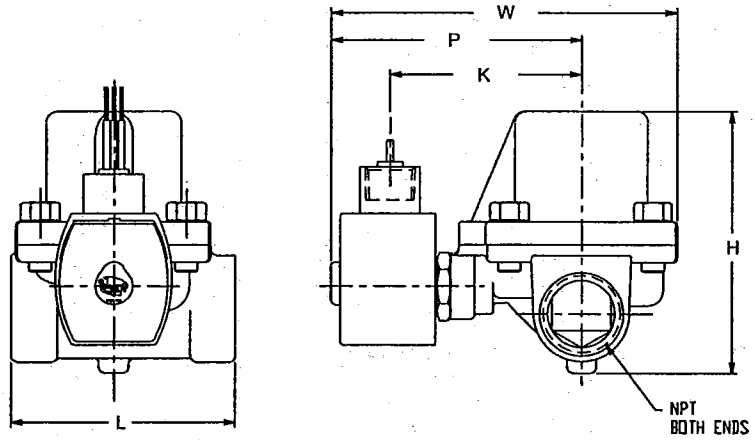

Constr. Refs. 5-9, 11, 20, 21, 23 , 25, 37,38

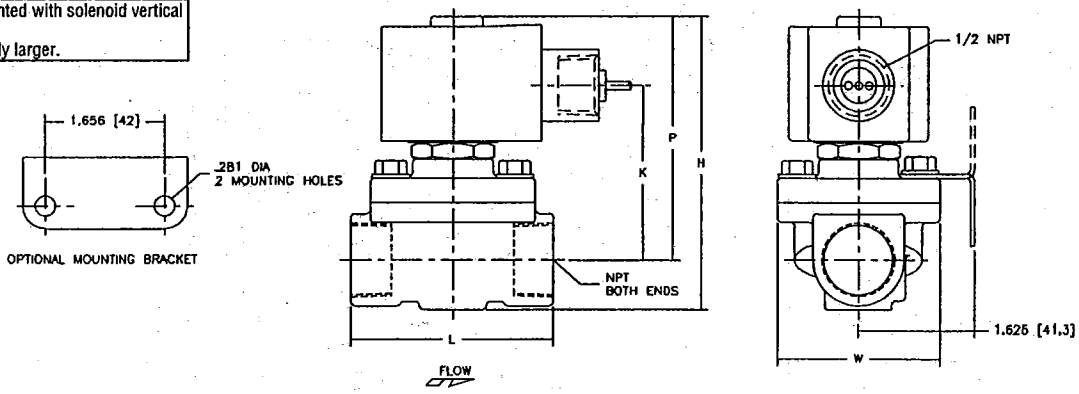

ASCO®

Dimensions: inches (mm)

Constr. Ref. No.		H	K	L	P	W
30	ins.	8.22	X	5.06	5.47	4.87
	mm	209	X	129	139	124
31	ins.	5.25	X	3.75	4.44	3.25
	mm	133	X	95	113	83
32	ins.	5.69	X	3.66	4.69	3.25
	mm	145	X	93	119	83
33	ins.	6.06	X	4.38	4.94	3.91
	mm	154	X	111	125	99
34	ins.	6.91	X	3.75	6.09	3.25
	mm	176	X	95	155	83
35	ins.	7.34	X	3.66	6.34	3.25
	mm	186	X	93	161	83
36	ins.	7.66	X	4.38	6.56	3.91
	mm	1.95	X	111	167	99
37	ins.	4.61	2.75	2.81	3.89	2.39
	mm	117	70	71	99	61
38	ins.	4.61	2.75	2.81	3.89	2.39
	mm	117	70	71	99	61
39	ins.	5.42	2.31	2.75	4.86	3.80
	mm	138	59	70	123	97
40	ins.	5.20	3.29	2.81	4.50	2.28
	mm	132	83	71	114	58
41	ins.	5.13	3.10	3.75	4.32	3.25
	mm	130	79	95	110	83
42	ins.	6.43	4.40	3.93	5.62	3.25
	mm	163	112	100	143	83
43	ins.	5.57	3.35	3.66	4.57	3.25
	mm	142	85	93	116	83
44	ins.	5.90	3.57	4.38	4.79	3.91
	mm	150	91	111	122	99
45	ins.	5.26	3.17	3.75	4.38	3.84
	mm	134	81	95	111	98
46	ins.	4.95	3.10	3.84	4.31	2.75
	mm	126	79	98	110	70
47	ins.	6.43	3.59	3.75	4.81	3.52
	mm	163	91	95	122	90
48	ins.	6.43	3.59	3.66	4.81	3.73
	mm	163	91	93	122	95
49	ins.	6.91	3.75	4.38	4.96	4.40
	mm	176	95	111	126	112
50	ins.	8.13	4.15	5.06	5.37	4.87
	mm	207	105	129	136	124
51	ins.	8.13	4.15	5.50	5.37	5.18
	mm	207	105	140	136	132

IMPORTANT: Valves may be mounted in any position, except as noted in specifications table.

Constr. Refs. 10, 15, 24, 26-36

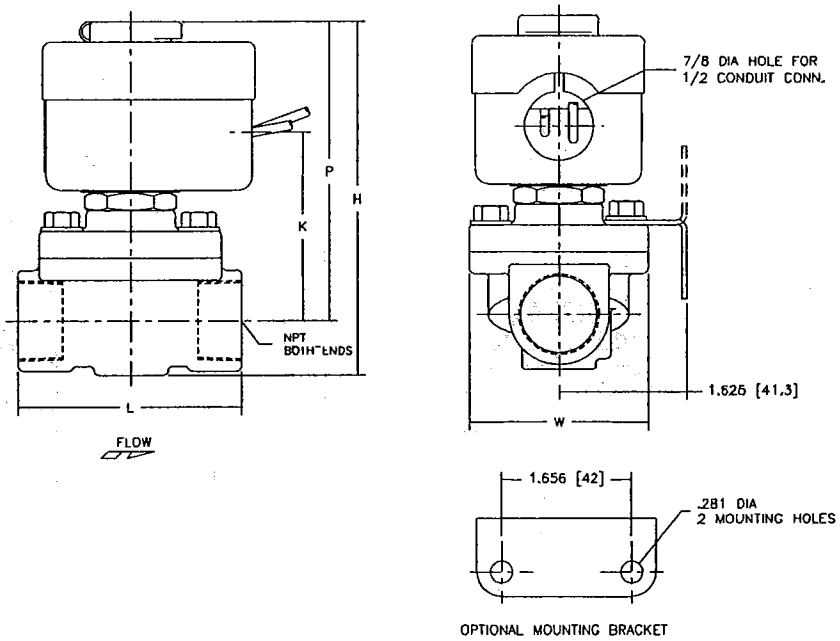

Constr. Refs. 12, 16, 18

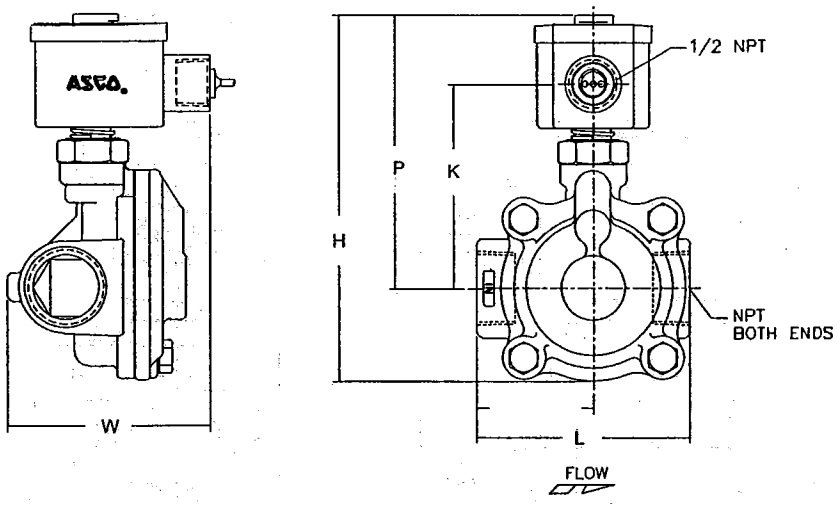

Note: Valve must be mounted with solenoid vertical and upright.

Dimensions: inches (mm)

Constr. Refs. 39

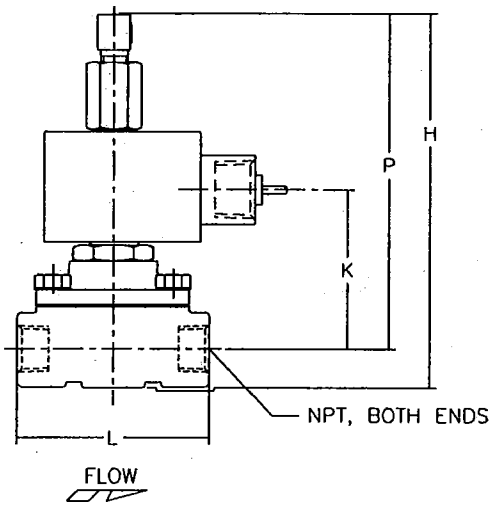

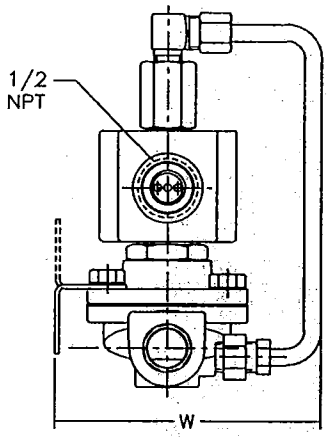

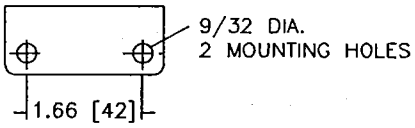

SHOWING MOUNTING BRACKET ONLY

Constr. Refs. 40-51

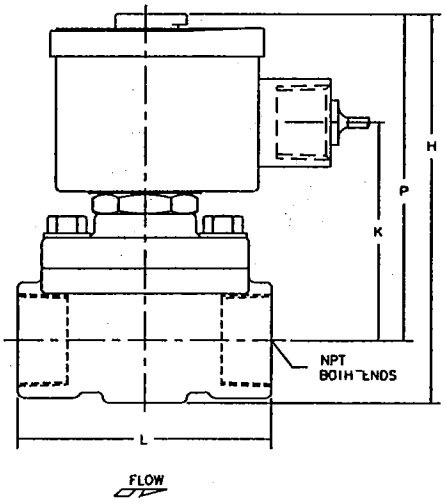

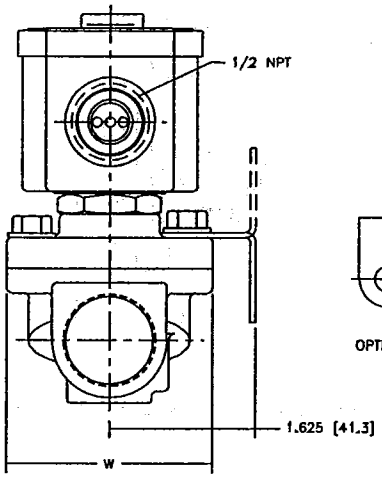

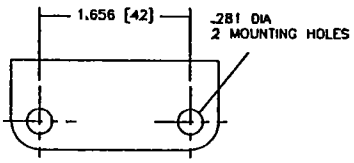

OPTIONAL MOUNTING BRACKET

Switches for Vacuum through 6000 psig with Adjustable Set Points and Fixed or Adjustable Deadband

Features:

- Set point repeatability, ±1% of operating range.
- All wiring terminals, adjustments and visual scales are accessible from the front of the switch.
- Choice of open frame type, general purpose or watertight enclosure.
- Choice of fixed, limited-adjustable or full-range adjustable deadband.
- Choice of single or two-stage units.
- Compact size.
- Mounts in any position.
- Rugged and vibration resistant; e.g., for compressors.
- Visual adjustment scales in psig and bars.
- Wide selection of transducer wetted materials suitable for air, water, oil or corrosive fluids.
- Mix and match switch and transducer components for increased stock flexibility or to change pressure ranges in field.

General Description:

ASCO P-Series pressure switches consist of an open frame or enclosure protected switch unit and a transducer unit. They can be ordered separately for customer stocking and/or field assembly or as a complete factory-assembled unit.

Switch

P-Series pressure switch units incorporate the unique ASCO TRI-POINT alternating fulcrum balance plate to control the operation of one or more electrical snap-action swtiches. The electrical snap-action switch together with the adjusting mechanism is a fully-tested, self-contained subassembly.

Transducer

Transducer unit incorporates a diaphragm/piston type pressure sensor, and is also a fully-tested, self-contained subassembly.

Operation

When pressure is applied to the transducer it is converted into movement of the piston. This piston movement is then used to control the operation of the electrical snap-action switch in the switch unit.

Options (See pages 34-35)

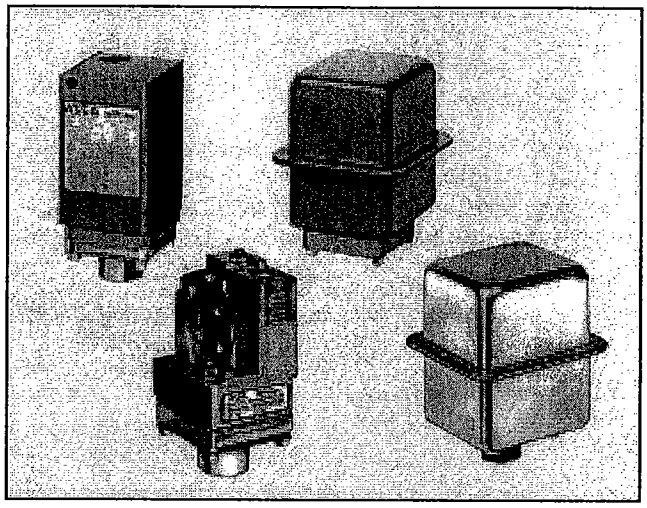

Standard Electrical Ratings

PA, PB, PC ① Series
- 15 Amp Res., 125 VAC
- 10 Amp Res., 250 VAC
- 1/8 HP, 125 VAC
- 1/4 HP, 250 VAC
- 1/2 Amp Res., 125 VDC
- 1/4 Amp Res., 250 VDC

PG Series
- 15 Amp Res., 125 VAC
- 10 Amp Res., 250 VAC
- 1/8 HP, 125 VAC
- 1/4 HP, 250 VAC

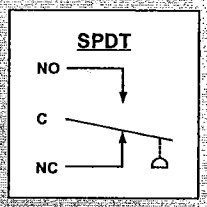

① PG Series, UL recognized component, rated 10 Amp Res., 125/250 VAC, 1/3 HP, 125/250 VAC.
② Open frame construction, UL recognized component.
③ FM listed for air flow interlocking service.

APPROVED

Standard Temperature Ratings

Ambient: -4°F (-20°C) to 122°F (50°C)
Fluid: For Buna "N" or Neoprene Diaphragm
-4°F (-20°C) to 180°F (82°C)
For Viton Diaphragm
-4°F (-20°C) to 250°F (121°C)
For 316 SS Diaphragm
-50°F (-45°C) to 300°F (149°C)
For Nylon Transducers
-4°F (-20°C) to 180°F (82°C)

Enclosures

ASCO TRI-POINT switches are available in either a general purpose or watertight enclosure, in addition to open frame construction. These enclosed units are made in accordance with NEMA and UL standards. These standards define the protection level an enclosure gives and the tests it must pass to meet a particular design.

General Purpose – Type 1. These enclosures are designed for indoor use to protect personnel from accidental contact with the equipment. P-Series general purpose enclosures are painted, zinc-coated steel and have a 7/8" diameter hole at the top for electrical entry.

Watertight – Type 4. Watertight and dust-tight enclosures are intended for use indoors and outdoors to protect the enclosed equipment against splashing or falling water, windblown dust and water, hose directed water, and severe external condensation. P-Series watertight switch enclosures are epoxy-painted, zinc-coated steel with a 1/2" conduit hub in the side of the lower housing for electrical entry. (For optional 316 SS watertight enclosure see page 13.)

Dimensions (inches)

P-Series Pressure (Mounting brackets optional)

Open Frame PA and PC Switch Units with Transducer Unit

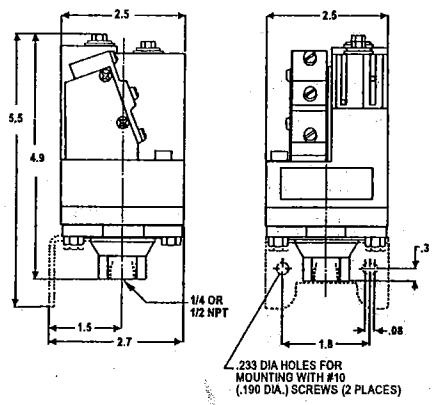

Open Frame PB and PG Switch Units with Transducer Unit

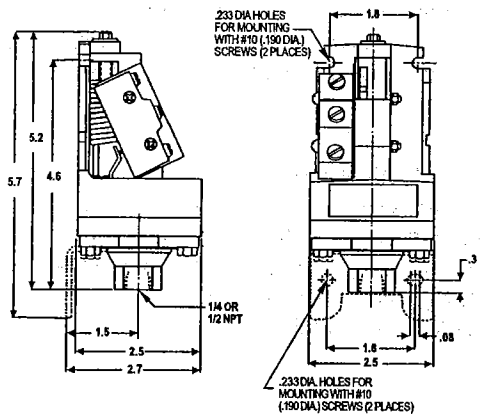

Type 1 General Purpose Switch Unit with Transducer Unit

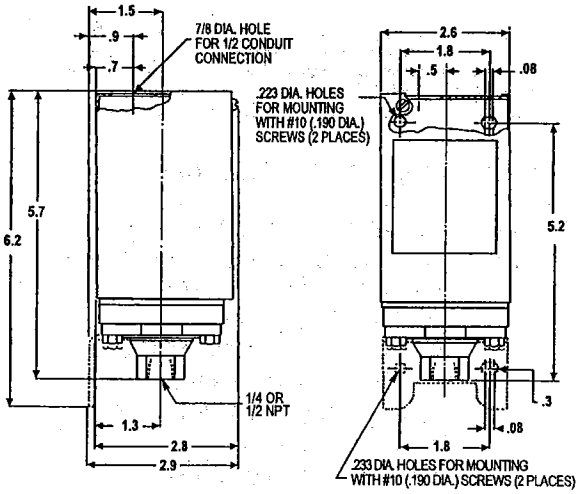

Type 4 Watertight Switch Unit with Transducer Unit

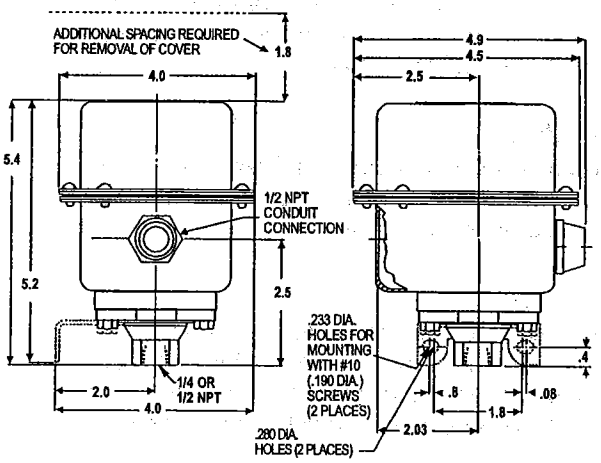

P-SERIES Pressure Switches

ASCO TRIPOINT

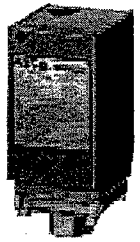

General Purpose Enclosure

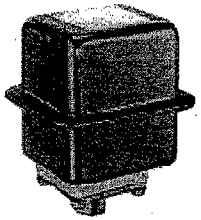

Watertight Enclosure

How to Select and Order

ASCO P-Series switches consist of two components, the switch unit and the transducer unit.

How to Select

1. Select the adjustable operating range based on desired actuation pressure.
2. Check that proof pressure is sufficient.
3. Read across and select the desired P-Series switch unit with the proper enclosure.
4. Continue across and select a matching transducer unit compatible with the fluid.

How to Order

Factory assembled – Simply order the switch and transducer unit by catalog number joined by a slash (/), e.g., PA36A/RD30A11.
Field assembled – Simply order the switch and transducer units separately by individual catalog number, e.g., one PA36A and one RD30A11.
Options – Add appropriate suffix for desired option or accessory (see pages 34-35).
Important Note: The third digit of each of the catalog numbers must be identical, e.g., PA 3 6A and RD 3 0A11.

PA, PB, or PC unit below

PA Switch Unit

Single-Stage Adjustable Deadband units allow independent adjustment of the set and reset points over the full operating range of the switch. The minimum difference between set and reset points is the deadband listed below; the maximum difference is the full range of the switch.

Open Frame

PB Switch Unit

Single-Stage Fixed Deadband units have an adjustable set point and a non-adjustable automatic reset point.

Open Frame

PC Switch Unit

Two-Stage Fixed Deadband units consist of two separate snap-action switches, each with an independently adjustable set point and non-adjustable reset point. The difference between the set and reset points of each switch is the deadband listed below; the minimum difference between the set points of the two switches is the separation.

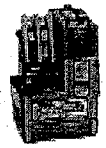

Open Frame

Select transducer unit below

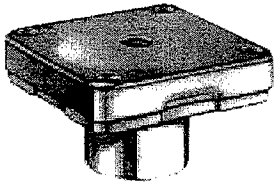

Standard connection is 1/4" NPT
(optional 1/2" NPT add suffix "B" to catalog number)

Transducer Unit

These guage pressure type transducers provide for one pressure connection in the bottom of the transducer. They are diaphragm/piston type transducers using an elastomer in contact with the fluid, backed by a piston cylinder. This allows high sensitivity for low pressures and strength for high pressures.

Specifications		Adjustable Deadband				Fixed Deadband				Two-Stage Fixed Deadband					Transducer Units				
											Separation				Air or Gas ②	Air, Oil or Gas	Water, Air, Oil or Gas	Corrosive Fluids	
Adjustable Operating Range (psig)	Proof Pressure (psig)	Adjustable Deadband Maximum Full Scale / Minimum At Mid-Range (in W.C.) ①	Open Frame Catalog No.	General Purpose Catalog No.	Watertight Enclosure Catalog No.	Fixed Deadband At Mid-Range (psig) ①	Open Frame Catalog No.	General Purpose Catalog No.	Watertight Enclosure Catalog No.	Fixed Deadband At Mid-Range (psig) ①	Maximum Full Scale / Minimum At Mid-Range (psig) ①	Open Frame Catalog No.	General Purpose Catalog No.	Watertight Enclosure Catalog No.	Nylon & Buna "N" Catalog No.	Aluminum & Buna "N" Catalog No.	Brass & Buna "N" Catalog No.	All 316 SS ③ Catalog No.	316 SS & Viton ④ Catalog No.
Vacuum																			
0 - 30" Hg	50	4" Hg	PA36A	PA30A	PA31B	1" Hg	PB36A	PB30A	PB31B	2.7" Hg	3" Hg	PC36A	PC30A	PC31B	—	RV34A11	RV34A21	—	RV34A32
Compound																			
30"Hg - 14 psig	50	6" Hg	PA26A	PA20A	PA21B	1" Hg	PB26A	PB20A	PB21B	4.3" Hg	6" Hg	PC26A	PC20A	PC21B	—	RV24A11	RV24A21	—	RV24A32
Pressure																			
0 - 4	60	—	—	—	—	0.05	PB46A	PB40A	PB41B	—	—	—	—	—	RD40A71	RD40A11	RD40A21	—	RD40A42
0 - 9	60	1.2	PA36A	PA30A	PA31B	0.4	PB36A	PB30A	PB31B	0.6	1.0	PC36A	PC30A	PC31B	RD30A71	RD30A11	RD30A21	—	RD30A42
2 - 18	60	1.8	PA26A	PA20A	PA21B	0.4	PB26A	PB20A	PB21B	0.8	1.8	PC26A	PC20A	PC21B	RD20A71	RD20A11	RD20A21	—	RD20A42
2 - 18	100	2.5	PA36A	PA30A	PA31B	0.6	PB36A	PB30A	PB31B	1.2	1.8	PC36A	PC30A	PC31B	—	—	—	RE30A44	—
4 - 36	150	4.0	PA26A	PA20A	PA21B	0.7	PB26A	PB20A	PB21B	2.0	3.6	PC26A	PC20A	PC21B	RE20A71	RE20A11	RE20A21	RE20A44	RE20A42
6 - 60	150	5.4	PA16A	PA10A	PA11B	0.9	PB16A	PB10A	PB11B	2.4	6.0	PC16A	PC10A	PC11B	RE10A71	RE10A11	RE10A21	RE10A44	RE10A42
10 - 100	200	9	PA16A	PA10A	PA11B	1.5	PB16A	PB10A	PB11B	4	10	PC16A	PC10A	PC11B	RF10A71	RF10A11	RF10A21	RF10A44	RF10A42
20 - 200	400	18	PA16A	PA10A	PA11B	3.0	PB16A	PB10A	PB11B	8	20	PC16A	PC10A	PC11B	RG10A71	RG10A11	RG10A21	RG10A44	RG10A42
30 - 300	450	27	PA16A	PA10A	PA11B	5.0	PB16A	PB10A	PB11B	12	30	PC16A	PC10A	PC11B	—	RH10A11	RH10A21	RH10A44	RH10A42
40 - 400	500	36	PA16A	PA10A	PA11B	6	PB16A	PB10A	PB11B	16	40	PC16A	PC10A	PC11B	—	RJ10A11	RJ10A21	RJ10A44	RJ10A42
60 - 600	2000	54	PA26A	PA20A	PA21B	12	PB26A	PB20A	PB21B	30	60	PC26A	PC20A	PC21B	—	—	RL20A21	—	RL20A42
100 - 1000	2000	90	PA16A	PA10A	PA11B	15	PB16A	PB10A	PB11B	40	100	PC16A	PC10A	PC11B	—	—	RL10A21	—	RL10A42
160 - 1650	5000	250	PA26A	PA20A	PA21B	100	PB26A	PB20A	PB21B	200	300	PC26A	PC20A	PC21B	—	—	RN20B21	—	RN20B42
270 - 2700	5000	300	PA16A	PA10A	PA11B	125	PB16A	PB10A	PB11B	250	400	PC16A	PC10A	PC11B	—	—	RN10B21	—	RN10B42
600 - 6000	9000	650	PA16A	PA10A	PA11B	200	PB16A	PB10A	PB11B	400	600	PC16A	PC10A	PC11B	—	—	—	—	RQ10B42

All switch units above are in stock for immediate delivery.

All switch units and transducer units above are in stock for immediate delivery.

① Values shown are nominal. ② Rated proof pressure on RF10A71 is 150 psig and on RG10A71 is 300 psig.

③ 316 SS transducer deadbands are approx. 50% greater than listed. ④ Transducers ending in 32 have 303 SS process connections, not 316 SS.

How to Select and Order

ASCO P-Series switches consist of two components, the switch unit and the transducer unit.

How to Select

1. Select the adjustable operating range based on desired actuation pressure.
2. Check that rated proof pressure is sufficient.
3. Read across and select the desired P-Series switch unit with the proper enclosure.
4. Continue across and select a matching transducer unit compatible with the fluid.

How to Order

Factory assembled – Simply order the switch and transducer unit by catalog number joined by a slash (/), e.g., PG36A/RV34A11.
Field assembled – Simply order the switch and transducer units separately by individual catalog number, e.g., one PG36A and one RV34A11.
Options – Add appropriate suffix for desired option (see pages 34-35).
Important Note: The third digit of each of the catalog numbers must be identical, e.g., PG 3 6A and RV 3 4A11.

Select P-Series switch unit and transducer unit below

PG Switch Unit

Limited Adjustable Deadband units have an adjustable set point and use a special snap-action switch that varies the deadband within the limits listed below.

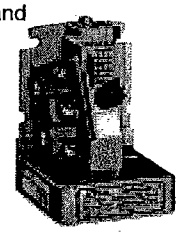

Open Frame

Transducer Unit

These **guage pressure type transducers** are diaphragm/piston type transducers using an elastomer in contact with the fluid, backed by a piston cylinder. This allows high sensitivity for low pressures and strength for high pressures.

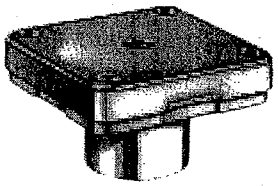

Standard port connection is 1/4" NPT (optional 1/2" NPT add suffix "B" to catalog number)

Specifications		Limited Adjustable Deadband				Transducer Units				
						Air or Gas ②	Air, Oil or Gas	Water, Air, Oil or Gas	Corrosive Fluids	
						Nylon & Buna "N"	Aluminum & Buna "N"	Brass & Buna "N"	All 316 SS ③	316 SS & Viton ④
Adjustable Operating Range (psig)	Proof Pressure (psig)	Adjustable Deadband At Mid-Range (psig) ① From/To	Open Frame Catalog No.	General Purpose Catalog No.	Watertight Enclosure Catalog No.	Catalog No.	Catalog No.	Catalog No.	Catalog No.	Catalog No.
Vacuum 0 - 30" Hg	50	1.8 - 5.0	PG36A	PG30A	PG31B	---	RV34A11	RV34A21	---	RV34A32
Compound 30"Hg-14 psig	50	2.8 - 6.0	PG26A	PG20A	PG21B	---	RV24A11	RV24A21	---	RV24A32
Pressure 0 - 9	60	0.7 - 1.3	PG36A	PG30A	PG31B	RD30A71	RD30A11	RD30A21	---	RD30A42
2 - 18	60	0.8 - 2.1	PG26A	PG20A	PG21B	RD20A71	RD20A11	RD20A21	---	RD20A42
2 - 18	100	1.8 - 3.1	PG36A	PG30A	PG31B	---	---	---	RE30A44	---
4 - 36	150	2.0 - 4.0	PG26A	PG20A	PG21B	RE20A71	RE20A11	RE20A21	RE20A44	RE20A42
6 - 60	150	2.1 - 4.6	PG16A	PG10A	PG11B	RE10A71	RE10A11	RE10A21	RE10A44	RE10A42
10 - 100	200	4 - 8	PG16A	PG10A	PG11B	RF10A71	RF10A11	RF10A21	RF10A44	RF10A42
20 - 200	400	8 - 17	PG16A	PG10A	PG11B	RG10A71	RG10A11	RG10A21	RG10A44	RG10A42
30 - 300	450	15 - 25	PG16A	PG10A	PG11B	---	RH10A11	RH10A21	RH10A44	RH10A42
40 - 400	500	22 - 45	PG16A	PG10A	PG11B	---	RJ10A11	RJ10A21	RJ10A44	RJ10A42
60 - 600	2000	35 - 75	PG26A	PG20A	PG21B	---	---	RL20A21	---	RL20A42
100 - 1000	2000	65 - 110	PG16A	PG10A	PG11B	---	---	RL10A21	---	RL10A42
160 - 1650	5000	190 - 290	PG26A	PG20A	PG21B	---	---	RN20B21	---	RN10B42
270 - 2700	5000	200 - 300	PG16A	PG10A	PG11B	---	---	RN10B21	---	RN10B42
600 - 6000	9000	300 - 500	PG16A	PG10A	PG11B	---	---	---	---	RQ10B42

All switch units and transducer units above are in stock for immediate delivery.

① Values shown are nominal. ② Rated proof pressure on RF10A71 is 150 psig and on RG10A71 is 300 psig.
③ 316 SS transducer deadbands are approx. 50% greater than listed. ④ Transducers ending in 32 have 303 SS process connections, not 316 SS.

Switches with Optional 316 Stainless Steel Enclosure

Every ASCO P-Series pressure switch is available in a corrosion-resistant, stainless steel enclosure. Typical applications include:

- Offshore platforms
- Hydrocarbon processing plants
- Oil & gas fields
- Oil & gas transmission lines
- Chemical plants
- Breweries
- Paper pulp mills
- Salt spray locations

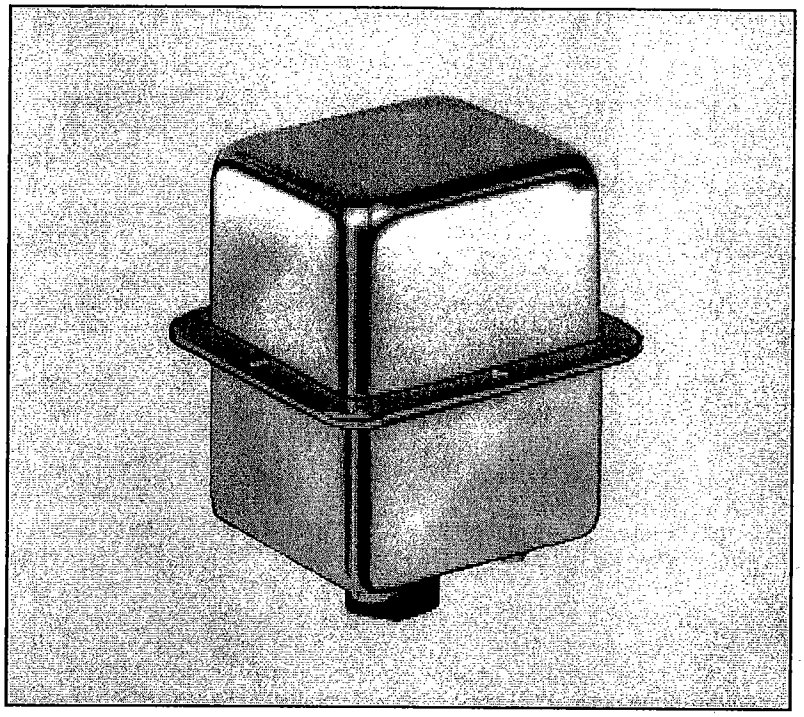

Stainless Steel Enclosure

ASCO Type 4X watertight enclosure is designed to provide protection against windblown dust, rain, sleet or external ice formation. The switch and transducer unit are available only as factory-assembled units, and include a UL-approved 1/2" NPT conduit hub.

How to Select and Order

ASCO P-Series switches with 316 SS enclosure consist of two *factory-assembled* components, the switch unit and the transducer unit.

How to Select (use tables on pages 10-12)

1. Select the adjustable operating range based on desired actuation pressure.
2. Check that rated proof pressure is sufficient.
3. Read across and select the desired P-Series switch unit with open frame construction.
4. To add a 316 SS enclosure, change the fourth digit of the open frame catalog number from "6" to "4", e.g., PG3 6 A becomes PG3 4 A.
5. Continue across and select a matching transducer unit compatible with the fluid.

How to Order

Factory assembled only – Simply order the switch and transducer unit by catalog number joined by a slash (/), e.g., PG34A/RV34A32.

Options – Add appropriate suffix for desired option (see pages 34-35).

Dimensions (inches)

P-Series Pressure with Optional 316 SS Enclosure

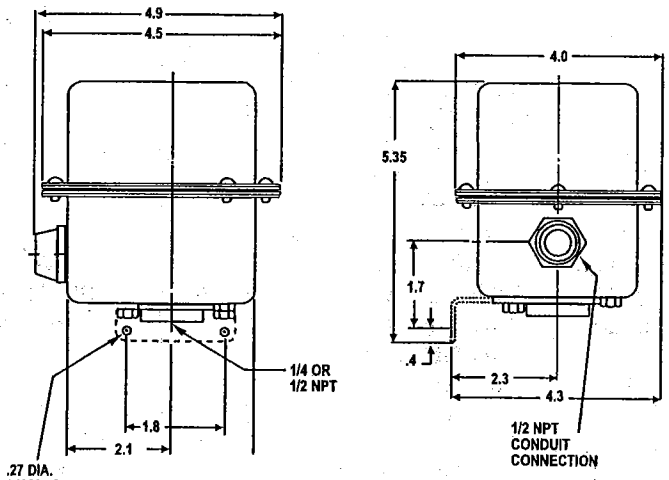

NOTE: THIS DIMENSION WILL VARY FROM 5.0 MIN. TO 6.04 MAX. DEPENDING ON TRANSDUCER SPECIFIED.

* MOUNTING BRACKET OPTIONAL

OPTIONS Pressure/Temperature Switches

H-Series, P-Series and S-Series Snap-Action Switch Options

Optional snap-action switches to meet specific electrical loads or application conditions are available on most ASCO TRI-POINT switch units. Generally, the construction of a switch unit with optional snap-action switches contains other specific parts and may be ordered only as a factory-built unit. To specify a particular optional construction, add the appropriate suffix to the switch unit catalog number, e.g., SA10D with optional gold contact snap-action switch (suffix "P") would become SA10D[P].

Description	Electrical Rating	Catalog Suffix	Deadband Variation From Listing
DC Rating 1 Amp Double Break	5 Amp, 125, 250 VAC 1/4 HP, 125 VAC 1/2 HP, 250 VAC 1 Amp, 125 VDC 1/2 Amp, 250 VDC	G	SA: +50% SB, SC, PA: +100% H: +200% PB: +400%
DC Rating 10 Amps, SPDT	10 Amp, 125 VAC, VDC 1/8 HP, 125 VAC, VDC	M	SA: +50% SB, SC, PA: +100% H: +120% PB: +400%
Double-pole Double-throw (Two SPDT Switches with Common Lever)	5 Amp, 125, 250 VAC 1/8 HP, 125 VAC 1/4 HP, 250 VAC 1/2 Amp, 125 VDC 1/4 Amp, 250 VDC	K	SA, SB, SD, SE, PB: +50%
Gold Contact Dry Circuit SPDT	1 Amp, 28 VAC 1 Amp, 28 VDC 25 Amp Res, 28 VDC	P	SA, SB, SC, PA: +25% H: +50% PB, PC: +100%
Hermetically Sealed SPDT	10 Amp Ind, 28 VDC 5 Amp Motor, 28 VDC 3 Amp Lamp, 28 VDC 1 Amp, 125 VAC	H	SA, PA: +100% H: +200% PB: +600%
High Ambient 250°F SPDT	5 Amp, 125, 250 VAC 1/8 HP, 125 VAC 1/4 HP, 250 VAC 1/2 Amp, 125 VDC 1/4 Amp, 250 VDC	F	SA, SB, SC: +25%
High Power 1 HP SPDT	20 Amp, 125, 250 VAC 1 HP, 125 VAC 2 HP, 250 VAC 1/2 Amp, 125 VDC 1/4 Amp, 250 VDC	W	SA: +50% SB, SC: +100% PB: +400%
Moisture Resistant Sealed Switch SPDT	5 Amp, 125, 250 VAC 1/8 HP, 125 VAC 1/4 HP, 250 VAC 1/2 Amp, 125 VDC 1/4 Amp, 250 VDC	J	SA: None SB, SC, PA: +25% PB, H: +50%
Tight Fixed Deadband SPDT	5 Amp, 125, 250 VAC 1/8 HP, 125 VAC 1/4 HP, 250 VAC 1/2 Amp, 125 VDC	T	SB, SC: -50%

P-Series Switch Options

Panel Mount – Open frame P-Series compact switch units are available for panel mounting with the switch unit inside and the transducer outside. The panel separates the fluid sensing portion from the electromechanical portion. Five holes for bolts and operating stem must be drilled or punched through the panel. Three constructions are available: add the suffix listed below to the switch unit catalog number for the desired thickness.

Panel Thickness	Suffix
10 Ga (.135±.005)	10
14 Ga (.075±.005)	11
16 Ga (.060±.005)	12

S-Series Switch Options

Industrial Adjusting Nut Covers – Available in clear plastic or metal to prevent tampering with set point adjusting nuts.
Clear plastic cover: To order, add suffix "1" to the switch unit catalog number, or order separately as SP01.
Metal cover: To order, add suffix "2" to the switch unit catalog number, or order separately as SP02.

JIC Construction – A switch unit having the electrical and adjusting nut covers attached to the switch body by a chain. Also designed to Type 13 specifications. To order, add suffix "3" to the switch unit catalog number, or order separately as SP03.

Terminal Block – Applicable to switch units with one single-poledouble-throw switch. The terminal strip is prewired to the snap-action switch. To order, add suffix "4" to the switch unit catalog number, or order separately as SP04.

Factory Sealed – Explosion-proof units may be ordered with a factory seal separating the electrical chamber from the conduit hubs and 24" long #14 AWG 105°C. rated lead wires. To order, change the fourth digit of the switch unit catalog number from "2" to "3", e.g., SA1[2]D becomes SA1[3]D.

Pressure Transducer Options

Special Wetted Materials – The following diaphragms may be substituted on transducer body materials of aluminum, brass, polyester and stainless steel. To order, substitute the material code below in the seventh digit of the transducer catalog number, e.g., a TF10A1[1] with optional viton diaphragm becomes a TF10A1[2].

Diaphragm	Material Code	Temperature Range
Buna "N"	1	-4°F (-20°C) to 180°F (82°C)
Ethylene Propylene	6	-4°F (-20°C) to 250°F (121°C)
Neoprene	3	-4°F (-20°C) to 180°F (82°C)
Fluorosilicone	7	-40°F (-40°C) to 250°F (121°C)
Viton	2	-4°F (-20°C) to 250°F (121°C)

Oxygen Cleaning – Pressure transducers for oxygen service should be specially cleaned. They are degreased and blacklight inspected, then assembled in a clean area and tested with oil-free air or nitrogen. Use metal body transducer with viton or neoprene diaphragm and add suffix "H" to transducer catalog number, e.g., TA40A13 becomes TA40A13[H].

Pressure Snubbers – A pressure snubber (1/4" NPTF by 1/4" NPTM) installed in the transducer pressure connection will dampen the pressure spikes to a value which will not cause damage. It consists of a body with a porous metal disc of stainless steel through which the fluid passes. To order, select a snubber compatible with the fluid. Available by seperate catalog number only (see table below).

Fluid	Brass Catalog No.	303 SS Catalog No.
Air, Non-Hazardous Gases	TP04G2	TP04G3
Water, Light Oil (under 225 SSU)	TP04E2	TP04E3
Oil (Heavy, (over 225 SSU)	TP04D2	TP04D3
Pressure Rating (psig)	2000	5000

Process Connection – A female process connection (1/4" NPT) is standard on all pressure transducers. A 1/2" NPT is available as an option on *gauge* pressure transducers. To order, add suffix "B" to transducer catalog number, e.g., RF10A21 becomes RF10A21[B].
Note: Not available on nylon transducers.

P-Series and S-Series Temperature Transducer Options

Armored Capillaries – Double braided copper armor is standard for copper capillary units. Stainless steel spiral interlocked armor is available for stainless steel capillary units. Add suffix "C" to transducer catalog number.

Thermal Well

Thermal Well① – Use with direct or remote sensors for protecting sensing bulb. This allows removal of bulb while maintaining a pressure-tight vessel. Available in 1/2" NPT or 3/4" NPT process connection in brass or 316 SS. Dimensions are in accordance with SAMA Std. RC17-9. Standard "U" dimension (insertion length) is 2-1/2" for direct mount and 6' capillary units and is 4-1/2" for 12' capillary units.

Material	Pressure Rating (psig)	"U" Dimensions (Inches)	Process Connection 1/2" NPT Catalog No.	Process Connection 3/4" NPT Catalog No.
Brass	1000	2-1/2	QP03	QP04
		4-1/2	QP13	QP14
		7-1/2	QP23	QP24
		10-1/2	QP33	QP34
316 SS	6000	2-1/2	QP07	QP08
		4-1/2	QP17	QP18
		7-1/2	QP27	QP28
		10-1/2	QP37	QP38

① Jam nuts provided with thermal wells.

Longer Capillaries – Standard copper and stainless steel capillary units can be furnished in 12' lengths. To order, add suffix "D" to transducer catalog number.
Consult ASCO for longer length capillaries.

Capillary Length (Feet)	Transducer Suffix	Bulb Length (Inches)	"U" Dimension Required (Inches)
6	—	3-1/2	2-1/2
12	D	5-1/2	4-1/2
13 - 20	E	5-1/2	4-1/2
21 - 50	F	8-1/2	7-1/2
51 - 80	G	11-1/2	10-1/2

Union Connector – For use with remote units for mounting of bulb in fluid being controlled. Available in 1/2" NPT and 3/4" NPT process connections in brass or 316 SS.

Material	Pressure Rating (psig)	Process Connection 1/2" NPT Catalog No.	Process Connection 3/4" NPT Catalog No.
Brass	500	QP01	QP02
316 SS	1500	QP05	---

Definitions

Accuracy – The maximum deviation from the set point under specified operating condition (ambient temperature, barometric pressure, etc.).

Adjustable Deadband – Refers to the capability of a pressure or temperature switch to allow the deadband to be adjusted over a given range. Certain ASCO TRI-POINT switches have an adjustable deadband which can be adjusted over the total operating range of the switch.

Adjustable Operating Range – The pressure or temperature range of the switch within which the set point may be adjusted.

Differential Pressure – The difference between two pressures. A differential pressure switch senses two pressure sources and can be adjusted to actuate on a desired difference between them.

Guage Pressure – The actual reading of a typical pressure guage and is the difference between the pressure within a vessel and the atmospheric pressure surrounding it. It is normally measured in pounds per square inch (psig).

Manual Reset – The switch is a semi-automatic device which operates automatically with a signal change in one direction but must be manually reset once the signal returns to its original position.

Proof Pressure – A pressure which a device can be subjected to for extended periods of time without changes in its operating characteristics.

Rated Overrange Temperature – A temperature which a device can be subjected to for extended periods of time without changes in its operating characteristics.

Repeatability – The closeness of agreement among a number of consecutive measurements of the output for the same value of input under the same operating conditions approaching from the same direction. Repeatability is normally specified as a percentage of the upper limit of the operating range.

> Example: Operating range 5-100 psig with ±1% repeatability; equals ±1% of 100 psig or ±1 psig.

Reset Point – After a pressure or temperature switch has reached its set point and operated the electrical switch, it must return to a point called the reset point before the electrical switch can return to its original position.

Set Point – The pressure reading at which the electrical switch element changes contact position (it can be specified either increasing or decreasing).

Switch Unit – ASCO uses the term "switch unit" to describe the electromechanical portion of a pressure or temperature switch. This is used in conjunction with a transducer unit to form a complete pressure or temperature switch.

Transducer Unit – ASCO uses the term "transducer unit" to describe that portion of a pressure or temperature switch to which a pressure or temperature is applied which converts the input signal to another form of energy to operate the switch unit.

Two-Stage (Dual) – ASCO uses the term "two stage" to describe a pressure or temperature switch which is equivalent to two pressure or temperature switches which are independently adjustable. This switch is equivalent to two fixed deadband switches.

Deadbands – The deadband is the difference between the set point and reset point readings. Deadbands are listed in the specification tables at nominal values. They are representative of the deadbands of the units at the middle of the range.

The deadband values for the full range adjustable deadband switches and limited adjustable deadband switches indicate the values through which the deadband may be adjusted.

Generally, as the set point is adjusted through the operating range, the deadband will vary. Normally, it will become narrower as the set point is towards the bottom of the range, and will become wider when the set point is towards the top of the range. The graph shown below indicates representative trends of this type of deadband variation.

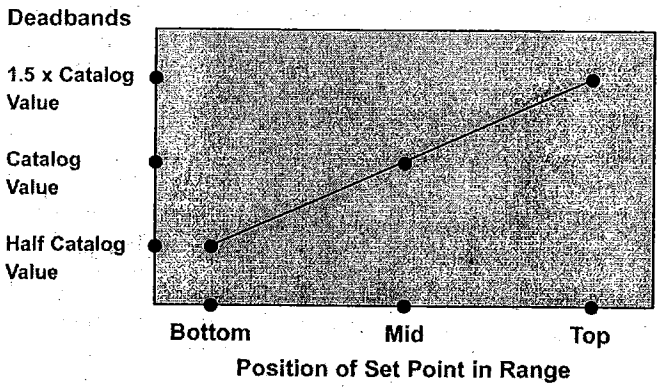

Temperature switch deadbands are a result of the characteristics of the vapor pressure curve as well as other factors. Normally, this results in a deadband which is narrower in the top third of the range than in the bottom third of the range. The values published are nominal and representative of mid-range set points.

Fluid Compatibility Guide

These recommendations are to be used as a guide only, as service life of material is dependent on temperature, concentrations, or catalysts that may be added and other conditions which are beyond our control.
Consult ASCO for specific service applications.

Note: Items in black circles are standard catalog units.
All others available on factory order.
P - Indicates preferred construction. S - Indicates satisfactory construction.

Transducer Material Code of Two Digits represents process connection material and diaphragm material, respectively; these are the sixth and seventh positions of the pressure transducer catalog number.

Process Connection: 6th Position

1 Aluminum
2 Brass
3 303 S.S.
4 316 S.S.
7 Nylon/Brass

Diaphragm: 7th Position

1 Buna "N"
2 Viton
3 Neoprene
4 316 S.S.
6 Ethylene Propylene
7 Fluorosilicone

Material Code	11	12	13	16	17	21	22	23	26	27	31	32	33	36	37	42	44	71
Ranges Available: Vacuum	Yes	Yes	Yes	Yes	Yes	Yes	Yes	Yes	Yes	Yes	Yes	Yes	Yes	Yes	Yes	Yes	No	No
Ranges Available: Inches of Water	Yes	Yes	Yes	Yes	Yes	No	No	No	No	No	Yes	Yes	Yes	Yes	Yes	Yes	No	No
Ranges Available: P.S.I.G. ⑤ to	400	400	400	400	400	3500	3500	3500	3500	3500	8000	8000	8000	8000	8000	8000	400	200
Acetic Acid													S	S			P	
Acetylene	P	S		S							S	S		S		S	S	
Air	P	S	S	S	S	S	S	S	S	S	S	S	S	S	S	S	S	P
Ammonia																	P	
Argon-Welding ①	P	S	S	S	S	S	S	S	S	S	S	S	S	S	S	S	S	P
Benzene-Benzol		P					S					S				S	S	
Butane	P	S				S	S				S	S				S	S	
Carbon Tetrachloride												P				P	S	
Cellulube		P		S			S		S			S		S		S	S	
Coke Oven Gas												P				P	S	
Ethyl Alcohol (denatured)	P	S	S	S	S	S	S	S	S	S	S	S	S	S	S	S	S	
Ethylene Glycol	P	S	S	S		S	S	S	S		S	S	S	S		S	S	
Freon Refrigerants																	P	
Freon Solvents ("MF", "TF", "BF")						P	S				S	S				S	S	
Fuel Oils and Diesel ④	P	S				S	S				S	S				S	S	
Gasoline																	P	
Gas, Inert	P	S	S	S	S	S	S	S	S	S	S	S	S	S	S	S	S	P
Gas (natural and manufactured) ④	P	S	S		S	S	S	S		S	S	S	S		S	S	S	
Helium	P	S	S	S	S	S	S	S	S	S	S	S	S	S	S	S	S	P
Hydrogen	P	S	S	S		S	S	S	S		S	S	S	S		S	S	
Jet Fuel (JP1 to JP6)		P			S		S			S		S			S	S	S	
Kerosene	P	S				S	S				S	S					S	
Methyl Alcohol (Methanol)	P		S	S	S	S		S	S	S	S		S	S	S	S	S	
Naphtha	P	S				S	S				S	S				S	S	
Nitrogen	P	S	S	S	S	S	S	S	S	S	S	S	S	S	S	S	S	P
Oils (coolant, hydraulic, lubricating and motor)	P	S				S	S				S	S				S	S	P
Oxygen, Gaseous ②		S	P		S		S	S		S		S	S		S	S	S	
Potassium Sulfate	P	S	S	S	S	S	S	S	S	S	S	S	S	S	S	S	S	
Propane Gas and Liquid	P	S	S			S	S	S			S	S	S			S	S	
"Pydraul" ("Monsanto")		P			S		S			S		S			S	S	S	
Steam ③						P	S		S	S	S	S		S	S	S	S	
Steam Condensate						P	S		S	S	S	S		S	S	S	S	P
Stoddard Solvent	P	S				S	S				S	S				S	S	
Toluene (Tolulo)		P					S					S				S	S	
Vacuum	P	S	S	S	S	S	S	S	S	S	S	S	S	S	S	S		
Vegetable Oil	P	S	S		S						S	S	S		S	S	S	
Vinegar												S		S	S	S	P	
Water, Fresh, Boiler Feed						P	S		S	S	S	S		S	S	S	S	P
Water (Distilled, Deionized, Demineralized)											P	S	S	S	S	S	S	
Water, Sea																	S	

Notes: ① For high purity applications use stainless steel transducers. ② Oxygen service requires special cleaning, specify suffix "H". ③ For steam service a condensate loop (pigtail) is required. ④ For pressure transducers for combustion service see pages 20-23. ⑤ Material availability refers to standard gauge pressure constructions only.

ASHCROFT®

Duralife® Pressure Gauge
Type 1009, Grade 1A (1.0% F.S.)

DESIGNED FOR SAFETY AND LONGER LIFE

- *5-year limited warranty*
- *Patented PowerFlex™ movement isolates movement from shock and vibration for longer life*
- *All stainless, all-welded construction for long life*
- *ASME Grade 1A, 1% accuracy full scale*
- *New **PLUS!™** Performance Option:*
  - *Liquid-filled performance in a dry gauge*
  - *Fights vibration and pulsations without liquid-fill headaches*
  - *See page 166 for details*
  - *Order as option XLL*
- *True Zero™ pointer indication – no stop pin to mask false zero reading – ensures safety and process control*

OTHER FEATURES:

Available in 2½" and 3½" dial sizes, Duralife® pressure gauges are liquid fillable and field convertible for panel mounting. Both zero and span adjustments are standard.

The gauge is available dry, liquid-filled weatherproof or hermetically sealed and *now* with ***PLUS!™*** performance option. A five year limited warranty is standard with the Duralife® 1009.

The following Table is *not* for conversion purposes.

STANDARD RANGES (4)(5)(6)

Pressure psi	kg/cm² - bar	kPa
0/15	0/1	0/100
0/30	0/1.6	0/160
0/60	0/2.5	0/250
0/100	0/4	0/400
0/160	0/6	0/600
0/200	0/10	0/1000
0/300	0/16	0/1600
0/400	0/25	0/2500
0/600	0/40	0/4000
0/800	0/60	0/6000
0/1000	0/100	0/10,000
0/1500	0/160	0/16,000
0/2000	0/250	0/25,000
0/3000	0/400	0/40,000
0/4000	0/600	0/60,000
0/5000	0/1000	0/100,000
0/6000		
0/7500		
0/10,000		
0/15,000		
Vacuum		
30"0 Hg	–1/0	–100/0
Compound		
30"Hg/15 psi	–1/0/1.5	–100/0/150
30"Hg /30 psi	–1/0/3	–100/0/300
30"Hg /60 psi	–1/0/5	–100/0/500
30"Hg /100 psi	–1/0/9	–100/0/900
30"Hg /150 psi	–1/0/15	–100/0/1500
30"Hg /300 psi	–1/0/24	–100/0/2400

BOURDON SYSTEM SELECTION

Ordering Code	Bourdon Tube & Tip Material(1)	Socket Material	Tube Type	Range Selection Limits (psi)	NPT Conn.(7)
AW	316 stainless steel	Bronze	C-Tube	Vac/800	¼
AW	316 stainless steel	Bronze	Helical	1000	¼
SW	316 stainless steel	316 stainless steel	C-Tube	Vac/800	¼ & ½(2)
SW	316 stainless steel	316 stainless steel	Helical	1000/15,000	¼ & ½(2)

(1) For selection of the correct bourdon system material, see the media application table on page 178.
(2) ½ NPT available 3½" lower SW system only.
(3) Type 1009 gauges may be ordered with metric single-scale dial: kPa,bar or kg/cm².
(4) Dual-scale dials will be supplied with standard metric inner scale and equivalent psi outer scale or with standard psi inner scale and equivalent metric outer scale–please specify.
(5) Special logos and scales available upon request.
(6) ¼" JIS, BSP or DIN threads available on SW systems. See Bulletin GS-4.

TO ORDER THIS 1009 DURALIFE PRESSURE GAUGE:

Select: 35 1009 SW 02L XXX 1000 psi

1. Dial size–2½", 3½"
2. Case type–1009
3. Tube and socket material
4. Connection size–⅛ (01), ¼ (02) ½ (04)
5. Connection location–Lower (L), Back (B)
6. Optional Features–see page 108
7. Standard pressure range–1000 psi

Reference Bulletin SS-1

Consult factory for guidance in product selection
Phone (203) 378-8281, FAX (203) 385-0499 or
visit our web site at www.ashcroft.com

DRESSER INSTRUMENT
a Halliburton company

ASHCROFT®

Low Pressure Diaphragm Gauge Series 1490, Grade A (2-1-2%)

- *2½" and 3½" dial size*
- *Glass-filled polysulfone case material, won't rust or dent*
- *Beryllium copper diaphragm*
- *Brass socket*
- *Wetted materials of beryllium copper, brass, polysulfone and RTV silicone*
- *Exclusive autoclavable feature*

The Ashcroft® Type 1490 low pressure diaphragm gauge is designed to measure pressure from 10 in.H_2O to 15 psi, both positive and negative pressures. This gauge uses a very sensitive diaphragm capsule to measure low pressure and vacuum. The gauge is specifically designed for use whenever the pressure medium is a gas that is not corrosive to beryllium copper, brass, polysulfone and RTV silicone. The polysufone case is suitable for intermittent or continuous service on natural gas provided a .013" throttle plug is installed in the socket. Typical applications are, but not limited to, vacuum pumps, gas leak detectors, air compressors, air filters, gas burners, gas measurement, vacuum ovens, suction regulators and respirators.

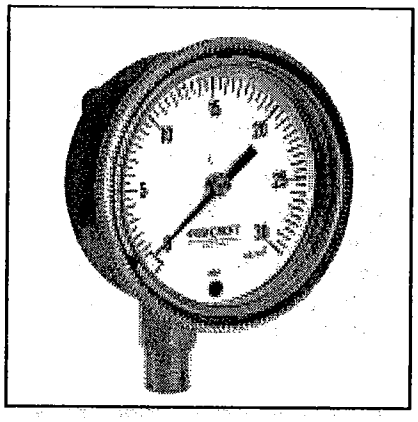

SELECTION TABLE

DIAL SIZE		TYPE		WETTED MATERIAL		CONN. SIZE & TYPE		CONNECTION LOCATION		RANGES		OPTIONAL FEATURES	
Code	Desc.	Code	Description	Code	Description	Code	Description	Code	Description	Code	Description	Code	Description
25	2½"	1490	Low Pressure Diaphragm Gauge	A	Beryllium Copper Brass Socket Polysulfone RTV Silicone	01	⅛ NPT	L	Lower	10 IW	0 to 10"H_2O	XAK	Autoclavable
35	3½"					02	¼ NPT	B	Center Back			XAN	1% Opt. Accuracy
						HD	⅛" I.D.Tubing Hose Barb(2,3)	T	Top		See Chart for Entire List of Ranges	XDA	Dial Marking
						HE	3/16" I.D.Tubing Hose Barb(2,3)	D	3 O'Clock			XNH	Stain. Steel Tag
						HF	¼" I.D.Tubing Hose Barb(2,3)	E	9 O'Clock			XNN	Paper Tag
						HG	¼" O.D. Polytube Hose Barb(2,3)					XTU(1,3)	Throttle Plug
						HH	10-32-2B Female Thread(2,3)					XUC(2)	U-clamp
												XZY	FlutterGuard™

(1) A throttle plug must be installed in the socket whenever the gauge is used for intermittent or continuous service on natural gas.
(2) U-clamp furnished when hose barb or female thread is specified. **EXAMPLES: 25 1490A 02L 10 IW XNH**
(3) Throttle plug not available with hose barb or female thread connections.

STANDARD RANGES

Pressure	Figure Intervals	Minor Graduation
0/10 in. H_2O	1	0.1
0/15 in. H_2O	5	0.2
0/30 in. H_2O	5	0.5
0/60 in. H_2O	10	1
0/100 in. H_2O	10	1
0/160 in. H_2O	20	2
0/200 in. H_2O	20	2
0/300 in. H_2O	50	5
0/10 oz./in.²	1	0.1
0/15 oz./in.²	5	0.2
0/30 oz./in.²	5	0.5
0/60 oz./in.²	10	1
0/100 oz./in.²	10	1
0/160 oz./in.²	20	2
0/250 oz./in.²	50	5
0/3 psi	0.5	0.05
0/5 psi	1	0.1
0/10 psi	1	0.1
0/15 psi	5	0.2

STANDARD RANGES (Cont.)

Vacuum	Figure Intervals	Minor Graduation
15/0 in.H_2O	5	0.2
30/0 in.H_2O	5	0.5
60/0 in.H_2O	10	1
100/0 in.H_2O	10	1
200/0 in.H_2O	20	2
15/0 oz./in.²	5	0.2
30/0 oz./in.²	5	0.5
60/0 oz./in.²	10	1
100/0 oz./in.²	10	1
Compound		
–30/30 in.H_2O	10	1
–30/30 in.oz./in.²	10	1
–10/10 in.H_2O	2	0.2

Dual Scale

Range		Graduations			
		Inner Scale		Outer Scale	
Inner Scale	Outer Scale	Figure Intervals	Minor Grad.	Figure Intervals	Minor Grad.
0/9 oz./in.²	0/15 in.H_2O	1	0.2	5	0.2
0/20 oz./in.²	0/35 in.H_2O	5	0.5	5	0.5
0/35 oz./in.²	0/60 in.H_2O	5	0.5	10	1
0/60 oz./in.²	0/100 in.H_2O	10	1	10	1

Other ranges available on request. Consult factory.

STANDARD METRIC RANGES

Pressure	Figure Intervals	Minor Graduation
0/60 cm. H_2O	10	1
0/2.5 kPa	0.5	0.05
0/4 kPa	1	0.1
0/10 kPa	1	0.1
0/16 kPa	2	0.2
0/25 kPa	5	0.5
0/40 kPa	10	1
0/100 kPa	10	1
Vacuum		
2.5/0 kPa	0.5	0.05
4/0 kPa	1	0.1
10/0 kPa	1	0.1
16/0 kPa	2	0.2
25/0 kPa	5	0.5
40/0 kPa	10	1
100/0 kPa	10	1
Compound		
–10/60 cm H_2O	10	1
–10/80 cm H_2O	10	1
–20/40 cm H_2O	10	1
–10/100 cm H_2O	10	1
–10/120 cm H_2O	20	2

TO ORDER THESE LOW PRESSURE DIAPHRAGM GAUGES:

Select: 25 1490 A 02L XXX 10"H_2O

1. Dial size – 2½ (25), 3½ (35) — 25
2. Case type — 1490
3. Wetted material — A
4. Connection size – ¼ (02), ⅛ (01) — 02L
5. Connection location – Lower (L), Back (B) — 02L
6. Optional features – see page 108 — XXX
7. Standard pressure range – 10"H_2O — 10"H_2O

Reference Bulletin DG-2

Consult factory for guidance in product selection
Phone (203) 378-8281, FAX (203) 385-0499 or
visit our web site at www.ashcroft.com

DRESSER INSTRUMENT
a Halliburton company

ASHCROFT®

Low Pressure Bellows Gauge Type 1187, 1188 & 1189 Grade A (2-1-2%)

- *Available in 4½", 6" and 8½" dial sizes*
- *Bellows-actuated mechanism*
- *Three bellows materials*
- *Easily adjustable micrometer pointer*
- *Phenolic (1188) or aluminum (1187, 1189) cases*
- *All-stainless steel movements*

Ashcroft® bellows gauges are used for measuring low pressures from 10" H_2O to 10 psi pressure as well as vacuum and compound ranges. Coupled with their sensitivity, these gauges have a rugged design for process and industrial applications.

PRESSURE RANGES[5]

STANDARD			METRIC	
Single Scale Dial Compound	Dual Scale Dial Pressure		Single Scale Dial Pressure	Dual Scale Dial Pressure
(Vac/Press) inH_2O	Inner inH_2O	Outer oz/in^2	mmH_2O	Outer Scale inH_2O
–5/5	0/10	0/6	0/250	0/10
–10/10	0/15	0/9	0/400	0/16
–30/10	0/20	0/12	0/600	0/24
–20/20	0/30	0/18	0/1000	0/40
–40/20	0/40	0/24	0/1600	0/60
–10/30	0/60	0/35	0/2500	0/100
–30/30	0/80	0/45	0/4000	0/160
–70/30	0/100	0/57	0/6000	0/240
–20/40	0/150	0/90	**Vacuum**	**Vacuum**
–50/50			–250/0	–10/0
inHg/psi	**psi**	**inHg**	–400/0	–16/0
–5/3	0/5	0/10	–600/0	–24/0
–2/5	0/8	0/16	–1000/0	–40/0
–5/5	0/10	0/20	–1600/0	–60/0
–10/5	**Vacuum**		–2500/0	–100/0
	inH_2O	**mmHg**	–4000/0	–160/0
			–6000/0	–240/0
	10/0	18/0	**Compound**	**Compound**
	15/0	28/0	–125/125	–5/5
	20/0	37/0	–200/200	–8/8
	30/0	56/0	–300/300	–12/12
	40/0	75/0	–500/500	–20/20
	60/0	110/0	–800/800	–30/30
	80/0	150/0	–1250/1250	–50/50
	100/0	180/0	–2000/2000	–80/80
	150/0	270/0	–3000/3000	–120/120
	inHg	**ftH_2O**		
	10/0	11/0		
	15/0	17/0		
	20/0	23/0		

CASE SELECTION

Dial Size[1]	Case Type	Case Material	Ring Style	Mounting
4½", 6", 8½"	1187	Aluminum, black epoxy coated	Hinged steel, black crinkle enamel	Flush — back only
4½"	1188	Phenolic, black	Threaded polypropylene ring	Stem — lower or back Surface — lower or back Flush— back, order 1278M mounting ring, specify X56
4½", 6", 8½"	1189	Aluminum, black epoxy coated	Threaded polypropylene ring	Stem — lower or back[2] Surface — lower or back[2] Flush — back, specify X56[2]

(1) 8½"cases have hinged rings. (2) 8½"only available in lower connection.

BELLOWS SYSTEM/RANGE SELECTION[3]

Order Code	Bellows & Socket Material	Pressure Range	Vacuum Range	Compound Range	NPT Conn.[4]	Available Case Size and Type
A	Brass	10"H_2O to 10 psi	10"H_2O to 20" mercury	5"H_2O vac. & 5" H_2O press. to 10" mercury vac. & 5 psi	¼	4½", 6", 8½"–1187 4½"–1188 4½", 6", 8½"–1189
S	316 SS	10"H_2O to 10 psi	10"H_2O to 20" mercury	5"H_2O vac. & 5" H_2O press. to 10" mercury vac. & 5 psi	¼	4½", 6", 8½"–1187 4½"–1188 4½", 6", 8½"–1189
P	Monel	10"H_2O to 10 psi	10"H_2O to 20" mercury	5"H_2O vac. & 5" H_2O press. to 10" mercury vac. & 5 psi	¼	4½", 6", 8½"–1187 4½"–1188 4½", 6", 8½"–1189

(3) For selection of the correct bellows system material, see the media application table on page 178.
(4) Optional connection ½ NPT.
(5) Others ranges available: Consult factory

TO ORDER THIS 1188, 1187 OR 1189 PRESSURE GAUGE:

Select: 45 1188 AS* 02L XXX 10"H_2O

1. Dial size–4½", 6" & 8½"
2. Case type–1188,1187, 1189
3. Bellows and socket material
4. Connection size–¼" (02), ½" (04)
5. Connection location–Lower (L), Back (B) only
6. Optional features–see page 108
7. Standard pressure range–10"H_2O

Accessories–see pages 166-173

(*) Denotes solid-front case design.

Reference Bulletin IG-1

Consult factory for guidance in product selection
Phone (203) 378-8281, FAX (203) 385-0499 or
visit our web site at www.ashcroft.com

DRESSER INSTRUMENT
a Halliburton company

F-300 SERIES FLOWMETER

F-300 FEATURES:

- Well suited for closed pipe installation
- Easy to read dual scale (GPM/LPM), screen printed on both sides of the meter body
- Horizontal or Vertical pipe installation
- One piece machined acrylic meter body
- Corrosion resistant internal parts

F-300 SPECIFICATIONS:

Temperature .....190°F/88°C @ 0 pressure
Pressure .....150 psig/10.3 Bar @ 70°F/21°C
Full scale accuracy ...± 10%
Meter Body material ..Acrylic
Connection type: ....Saddle
Float material .....#316 SS, Hastelloy or Teflon (low flow units)
Max. pressure drop ...0 psi

See instruction manual at www.blue-white.com for detailed installation and operating requirements.

PIPE SIZE:
1", 1 1/4", 1 1/2", 2", 2 1/2", 3", 4", 6", 8"

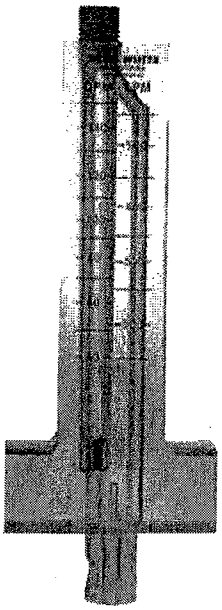

F-300 Series

ORDERING INFORMATION

FOR HORIZONTAL PIPE INSTALLATION

PVC PIPE SCHEDULE 40 (IPS Pipe ASTM - D-1785) or COPPER TUBE Type "K" or "L"

Model Number	Gallons Per Minute (GPM) Std. Flow(*)	Gallons Per Minute (GPM) Low Flow(*)	Liters Per Minute (LPM) Std. Flow(*)	Liters Per Minute (LPM) Low Flow(*)	PVC Pipe(*) or COPPER(*) Tube Size	List Price
F-30100*	5 to 35	2 to 10	20 to 160	8 to 38	1" Pipe	**65.21**
F-30125*	15 to 75	5 to35	60 to 280	30 to 130	1 1/4" Pipe	**65.21**
F-30150*	20 to 100	8 to 30	75 to 375	30 to 110	1 1/2" Pipe	**65.21**
F-30200*	40 to 150	15 to 70	150 to 550	60 to 260	2" Pipe	**70.09**
F-30250*	60 to 240	—	225 to 900	—	2 1/2" Pipe	**79.98**
F-30300*	80 to 300	40 to 140	300 to 1125	160 to 520	3" Pipe	**90.14**
F-30400*	125 to 500	—	550 to 2000	—	4" Pipe	**98.33**
F-30600*	250 to 1050	—	900 to 3900	—	6" Pipe	**159.01**
F-30800*	500 to 1900	—	2000 to 7200	—	8" Pipe	**176.75**

(*) **PVC PIPE:** add letter **"P"** for *Std. Flow* and **"PR"** for *Low Flow.*
(*) **COPPER TUBE:** add letter **"T"** for *Std. Flow* and **"TR"** for *Low Flow.*

Note: if used on SCHEDULE 80 PVC pipe will read 12% higher than actual.

FOR VERTICAL PIPE INSTALLATION

PVC PIPE SCHEDULE 40 (IPS Pipe ASTM - D-1785) or COPPER TUBE Type "K" or "L"

Model Number	Gallons Per Minute (GPM) Std. Flow	Liters Per Minute (LPM) Std. Flow	PVC Pipe or COPPER Tube Size	List Price
D-30150*	20 to 100	75 to 375	1 1/2" Pipe	**79.51**
D-30200*	40 to 150	150 to 550	2" Pipe	**85.69**
U-30150*	20 to 100	75 to 375	1 1/2" Pipe	**79.51**
U-30200*	40 to 150	150 to 550	2" Pipe	**85.69**

(*) **PVC PIPE:** add letter **"P"** for *Std. Flow*
(*) **COPPER TUBE:** add letter **"T"** for *Std. Flow*

Note: if used on SCHEDULE 80 PVC pipe will read 12% higher than actual.

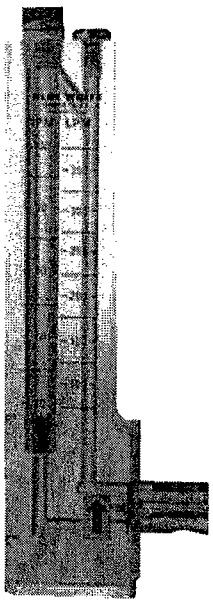

D-300 U-300 Series

F-300 and D&U-300 PARTS

Part Number	Description	List Price
F-3005	Cap Plug for all F-300, D-300 & U-300	1.07
F-3028	Mounting Clamp, F-30100P, F-30100T, F-30125P & F-30125T	4.08
F-3040	Mounting Clamp, F-30200P, F-30200T, F-30150P, F-30150T,	4.08
F-3044	Mounting Clamp, D-30150P, D-30150T, D-30200T, F-30250T	4.84
F-3048	Mounting Clamp, F-30250P	4.84
F-3052	Mounting Clamp, F-30300T, D-30200P, U-30200P	5.04
F-3056	Mounting Clamp, F-30300P	5.04
F-3064	Mounting Clamp, F-30400T	5.43
F-3072	Mounting Clamp, F-30400P	5.43
F-3116	Mounting Clamp, F-30600P, F-30600T	9.22
F-3152	Mounting Clamp, F-30800P, F-30800T	9.35
F-3003	Gasket Seal, for all pipe & tubing units through 4" O.D	1.48
F-3004	Gasket Seal, for all pipe & tubing units 6" through 8" O.D	1.54
F-3001	Float, F-300 standard range units, stainless steel	15.80

Dimensions

Model #	A	B	C
F-30100	6"	2 7/16"	1"
F-30125	6"	2 7/16"	1"
F-30150	6"	2 7/16"	1"
F-30200	6"	2 7/16"	1"
F-30250	6"	2 7/16"	1"
F-30300	6"	2 7/16"	1"
F-30400	6"	2 7/16"	1"
F-30600	7 1/2"	2 7/16"	1 1/4"
F-30800	7 1/2"	2 7/16"	1 1/4"

Model #	A	B	C	D
U-30150	6 7/8"	2 1/2"	1"	1 9/16"
D-30150	6 7/8"	2 1/2"	1"	1 9/16"
U-30200	6 7/8"	2 1/2"	1"	1 9/16"
D-30200	6 7/8"	2 1/2"	1"	1 9/16"

F-300 SERIES

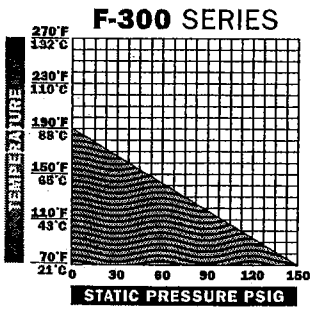

Minimum Pipe Length

Minimum Inlet Pipe Length = 10 X Pipe I.D.

Minimum Outlet Pipe Length = 4 X Pipe I.D.

APPROXIMATE SHIPPING WEIGHT
Units for 1" to 4" pipe
1 lb.\ .454 kg.
Units for 6" or 8" pipe
2 lbs.\ .907 kg.

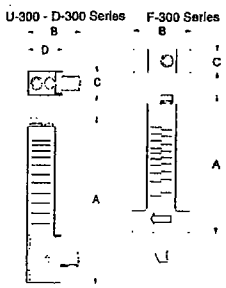

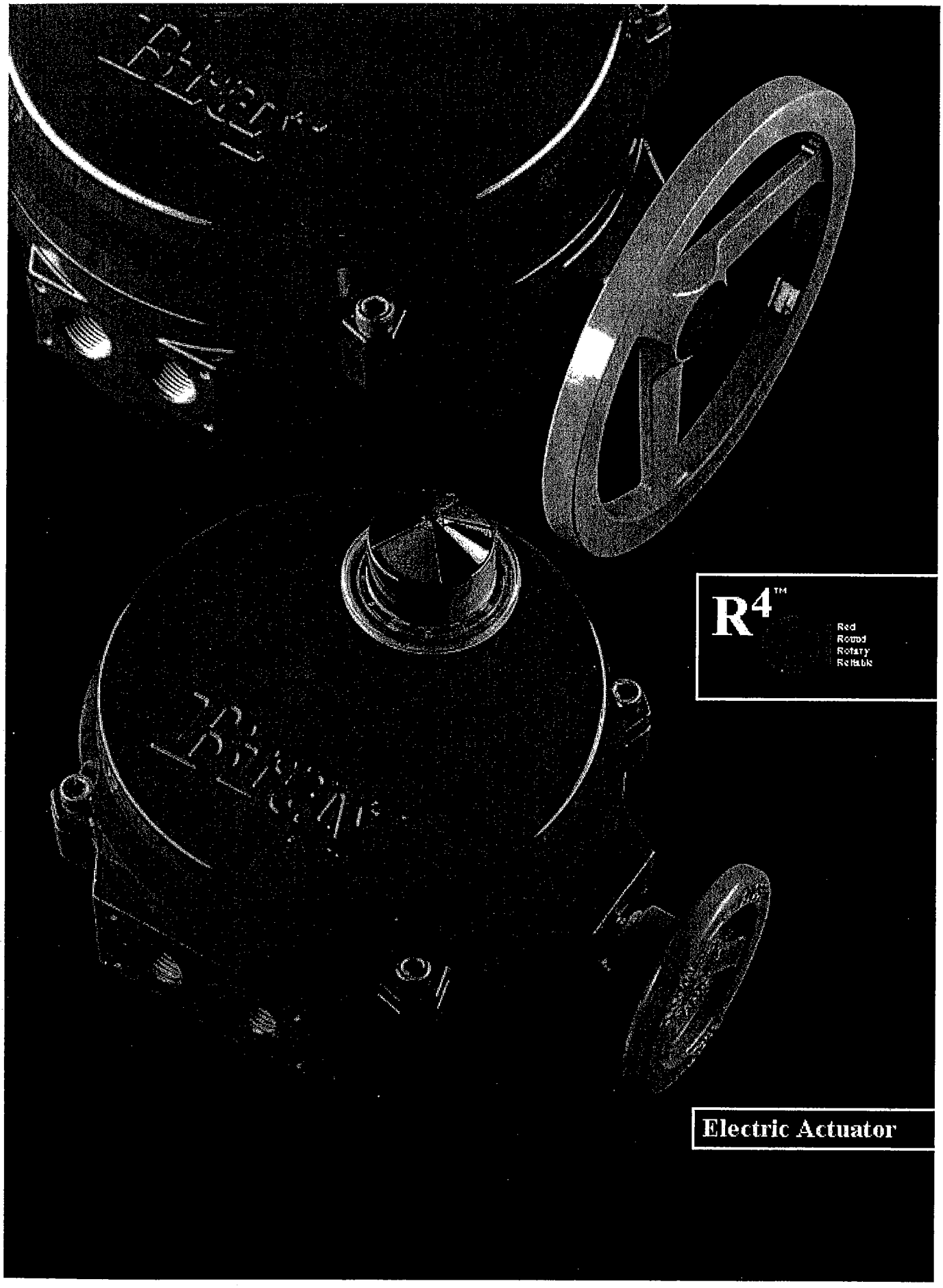

R4™

Red
Round
Rotary
Reliable

Electric Actuator

SERIES 70

RUGGED ELECTRIC ACTUATOR FOR ROTARY VALVES

300 TO 6,500 LB-IN OUTPUT TORQUE

Bray Controls' years of proven success in electric actuation, combined with innovative engineering, has produced the R^4. The R^4 features on-off or modulating control. This red, round electric actuator for rotary valves delivers highly reliable service.

R^4 Red Round Rotary Reliable

Bray's unique, customer-friendly designed Control Center has many advantages over present industry standards including:

- Ease of customer field wiring directly to the terminal strip without interference from other components.
- Simple and unique manual override handwheel system
- Lowest profile and lightest weight actuator on the market.
- Simple finger or screw driver adjustment of travel limit cams without interference from other components.
- Highly visible valve status display.
- Externally adjustable travel stops.
- Captive housing screws.
- Special features: SPDT-DB travel switches.

Additionally, components not requiring customer access are protected underneath the Power Center cover plate.

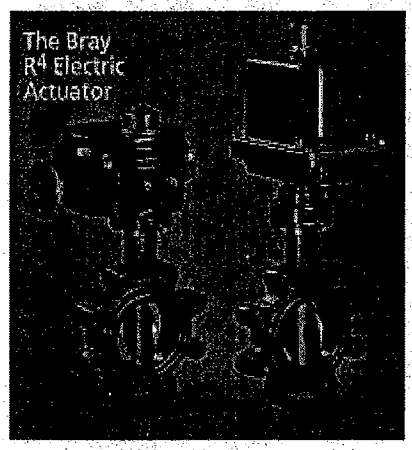

The R4 compared to a typical actuator, both mounted to 4" Bray valves.

LOW PROFILE, COMPACT, HIGH TORQUE DESIGN

The R^4 is by far the most compact, lowest profile design of any electric actuator delivering comparable torque output. Through research and many years of field experience have gone into the development of this state-of-the-art actuator - *the product of the future.* This design offers the advantages of greatly reduced space requirements, lighter weight and ease of installation and maintenance when compared to other electric actuators. When mounted directly to Bray valves, the R4 is especially compact.

DIRECT MOUNTING OF THE R^4 ON BRAY VALVES

Bray actuators mount directly on to Bray valves without using any external linkage. Field installation is simple and misalignment is minimized. For sanitary processing and outdoor applications, the Bray direct mounting system reduces the possibility of contamination buildup or corrosion between the valve and actuator. The mounting pattern complies with ISO 5211 and VDI/VDE 3845 (NAMUR recommendations). The R4 can be mounted and operated in any position. Standard rotation is 90 degrees reversible. Extended rotation units such as 180, 270 degrees or beyond are optional. Bray can provide linkages for mounting the R4 to other devices requiring 90 degrees rotation. Please consult the Bray factory for further information.

EXTERIOR FEATURES

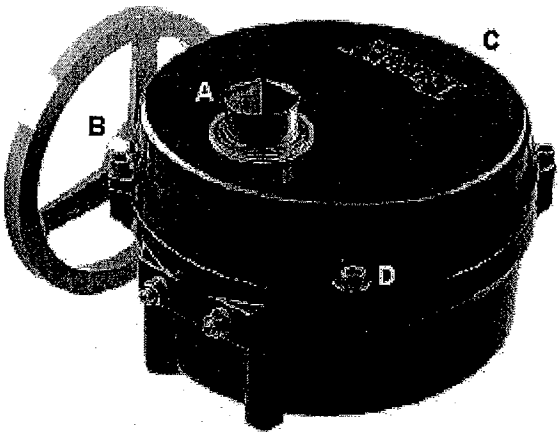

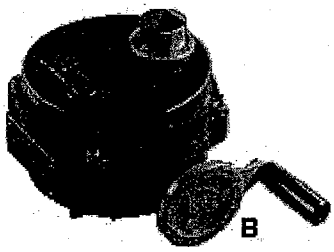

VALVE STATUS DISPLAY (A)
The R4 features a highly visible valve status display. Prominently labeled and color coded - green for open, red for closed - the display indicates valve position through the full range of travel. The display can be locally seen from almost any angle. Made of high impact, heat and chemical resistant clear polycarbonate, this display withstands caustic washdown and offers excellent corrosion protection.

MANUAL OVERRIDE (B)
A manual override handwheel is standard on all models to rotate the valve without electrical power. A yellow caution stripe around the handwheel hub indicates the handwheel is engaged for manual operation.

ENCLOSURE (C)
Die-cast aluminum cover and base are waterproof (NEMA-4, 4X, IP 65) and high-quality polyester powder coated for exceptional corrosion, wear, impact and ultra-violet resistance. Potential leak paths are eliminated since the indicator shaft does not protrude through the enclosure.

CAPTIVE COVER BOLTS (D)
The cover is attached to the base by stainless steel bolts. When the cover is removed the bolts are held captive in the cover. This prevents time consuming problems caused from lost or misplaced bolts.

CONDUIT ENTRIES (E)
For ease of field wiring, the R4 features two conduit connections in either NPT or metric threads. One entry is for power wiring, one for control wiring.

ELECTRICAL CABLE CONNECTIONS (F) (Optional)
A multi-pin, watertight electrical cable connector is designed for full compatibility with today's industrial wiring requirements. Standardized factory pre-wiring prevents wiring errors and provides quick-connect field installation. We offer two types of connections for wiring to the power supply: a Cordset with cable connection to match the pins of the R4 and flying leads to the power supply, and an Extension Cord/ Receptacle with connections on both ends with receptacle at power supply.

TAPPED HOLES FOR LOCAL CONTROL STATION MOUNTING (G)
The conduit entry panel has four tapped holes for ease of installation of an optional local Control Station.

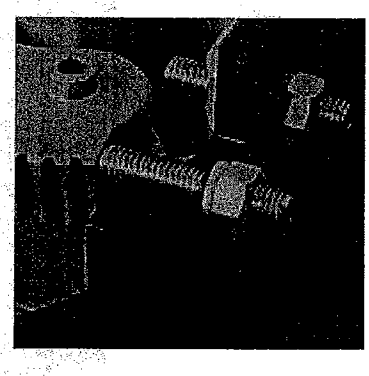

MECHANICAL TRAVEL STOPS
Stainless steel mechanical travel stops permit precise field adjustment of actuator movement to specific degrees of rotation. The travel stops are located outside the base for easy readjustment without removing the cover. When adjustment has beed made, stainless steel lock nuts with O-ring seals hold the travel stops securely in place. The travel stops are normally set at the factory for 0° and 90° of travel, however additional fine adjustment may be made in the field.

R4

Red
Round
Rotary
Reliable

CONTROL CENTER

CLEAN AND EASY ACCESS TO ALL FIELD WIRING AND ADJUSTMENTS

Bray has specifically engineered the R4 Control Center for customer-friendly convenience. Designed like a junction box, the R4 offers by far the easiest access to terminal block wiring, cam adjustments and switch installation. Accessories are easily added, either before installation or after installation. Therefore, the time required for field start-up and adjustment is greatly reduced, and maintenance can be performed with assured ease and safety.

Bray's unique design, modular system of components and accessories, and innovative features combine to best meet today's industrial requirements.

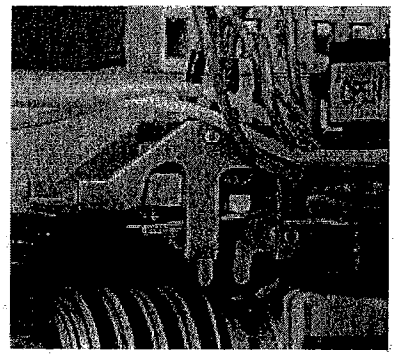

TORQUE LIMITING SWITCHING SYSTEM (Optional)

The torque limiting switching system consists of two SPDT-DB mechanical switches and two factory calibrated adjusting screws. The green screw adjusts the torque limit in the open direction, and the red screw adjusts the torque limit in the closed direction. The switches independently respond to predetermined loads in both the open and closed travel directions by sensing the movement of the worm shaft, and interrupting the electrical power to the motor. The switches can operate at any point of actuator travel.

R4 APPLICATIONS

The R4 is the ideal choice for process control applications involving:

- Automation and computer systems.
- Butterfly, ball, plug and other rotary valves.
- Dampers, switches, safety and flow-control devices.
- Machine and fixture indexing.
- Hostile environments demanding excellent moisture, chemical and corrosion resistance.
- Long service life and rugged reliability.

INDUSTRIES

Bray's R4 Electric Actuators are used in a wide range of industries world wide, including: Chemical, Pharmaceutical, Petroleum Refining and Oilfield, Microelectronics, Pulp and Paper, Water and Waste Water Treatment, Brewing, Food Processing, Beverages, Power, Marine,

CONTROL CENTER FEATURES

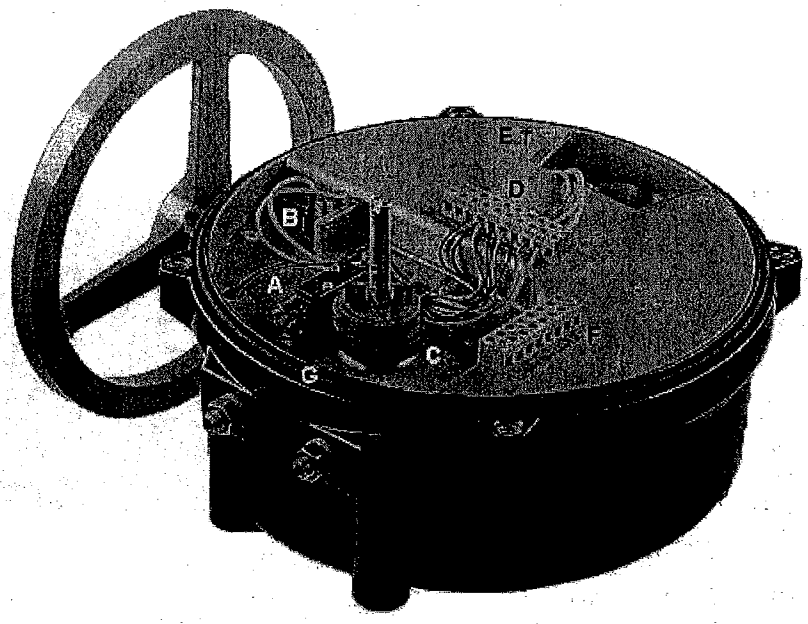

TERMINAL BLOCK (D)

The actuator switches are pre-wired to a terminal block. The block has been designed for ease of customer wiring without interference from other components and features clearly marked wire numbers. The block has been placed near the two conduit entries with ample room for running wire leads. A wiring diagram is included inside the cover for easy reference. The **ground wire screw (E)** is painted green and positioned for visibility. The **terminal block (F)** is for Bray factory wiring and limit switch field wiring.

O-RING SEAL FOR WATERTIGHT ENCLOSURE (G)

The large seal between the cover and base provides a waterproof enclosure and prevents internal corrosion. The Bray R4 O-ring seal is the best design for watertight enclosures and is far superior to commonly used gaskets.

HEATER (Optional)

Pre-wired to the terminal block, a thermostatically controlled heater prevents condensation from collecting inside the actuator, which could cause damage to the electrical components. The heater is mounted below the switch plate. Heaters are ideal for use in applications with extremely wide temperature or humidity ranges.

TRAVEL LIMIT SPDT-DB SWITCHES (A)

Bray has provided two SPDT-DB switches as standard. One SPDT-DB (double break) switch provides two independent electrical circuits, similar to two SPDT switches. This feature allows one side of the switch to be used for AC motor control, and the other side of the switch to be used for a completely independent purpose, i.e. to switch a low voltage AC lamp or a DC computer input. This switch combination is used for both open and closed positions of the valve and requires only one cam for each direction of valve travel. Bray's design eliminates the need for 4 SPDT switches and 4 cams commonly used in these applications, and provides synchronicity between motor control and position display. Switches are easily accessible without interference from other components. Each switch is marked with open or closed labels and the cams are color coded, eliminating the possibility of making wrong adjustments of travel limits or field wiring errors.

AUTOMATIC POWER CUTOUT SWITCH (B)

The R4 is supplied with a SPDT-DB mechanical switch which cuts power to the motor when the handwheel is engaged for manual operation. This switch also functions as a safety emergency shutdown device that immediately stops the actuator even if electrical power is still being applied to the unit.

CAMS / CAM ADJUSTMENT (C)

Bray's patented cam design is an outstanding feature of the R4. Cams for each switch are *infinitely* adjustable by finger touch or screwdriver with no special tools needed. The adjustment knobs rotate the specifically formed cams. Each cam is color coded - the red adjustment knob drives the red cam (which closes valve,) and the green knob drives the green cam (which opens valve.) Standard factory setting allows 90 degrees of travel between open and closed positions.

POWER CENTER

Bray designed the R4 to completely separate the Control Center from the Power Center. The Power Center, located in the actuator base, consists of motor, gear train, capacitor, output drive and heater. This design protects the power drive system as each component has been engineered to require no customer servicing. The Power Center components have been uniquely configured to maintain the extremely low profile of the R4.

MOTOR (A), CAPACITOR (B) AND SPUR GEAR (C) SYSTEM

The R4 has a 120 or 220 VAC single phase permanent split-capacitor reversible induction motor. The motor features a built-in thermal overload protector of a bi-metallic strip in windings set at 338 degrees F (170 C) with automatic reset. The heavy-duty spur gear train is composed of precision cut, multi-staged gears and shafts. The gears and shafts are heat treated high alloy steel and will withstand locked rotor conditions. The spur gear train is permanently lubricated at the factory. This gear train drives the worm shaft which in turn drives the segmented worm gear output shaft.

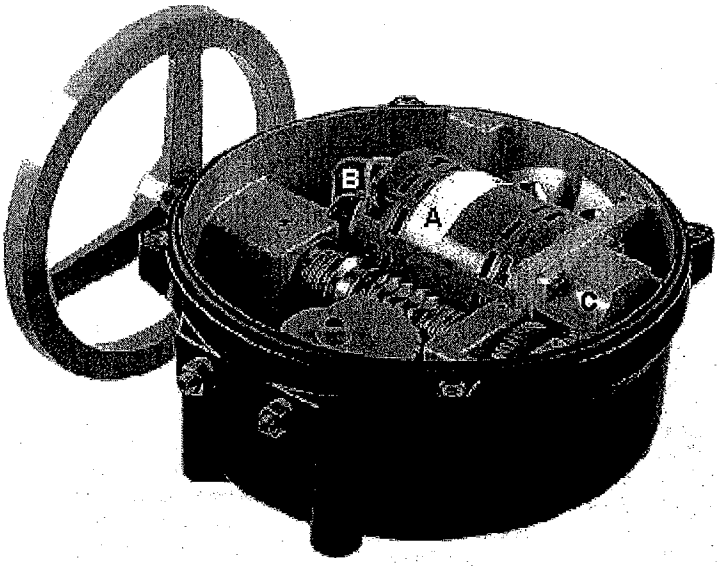

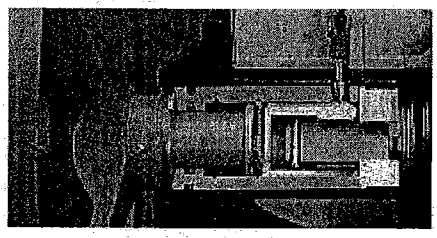

Left photograph is sectional view of the manual override assembly with override disengaged.

Photograph to right shows manual override engaged.

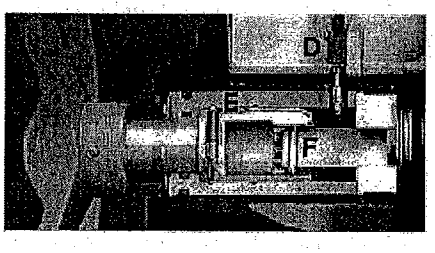

MANUAL OVERRIDE HANDWHEEL ASSEMBLY

- Pull to engage for manual operation.
- Rotate handwheel to position valve.
- Push to disengage for power operation.

A simple pull engages the handwheel for manual operation. The Bray manual override system ensures positive and fast manual operation without the use of extra tools or levers. When the handwheel is engaged, the electrical power to the motor is cut off by means of the Automatic Power Cutout Switch **(D)**. When engaged, the manual override shaft is held in position by a Ball Detent **(E)**. The Ball Detent also holds the shaft in position when the handwheel is pushed in to disengage the override. The Drive Pin **(F)** engages and disengages the manual override shaft from the worm and segmented worm gear output shaft. When the handwheel is pushed or pulled, the drive pin smoothly engages the worm shaft.

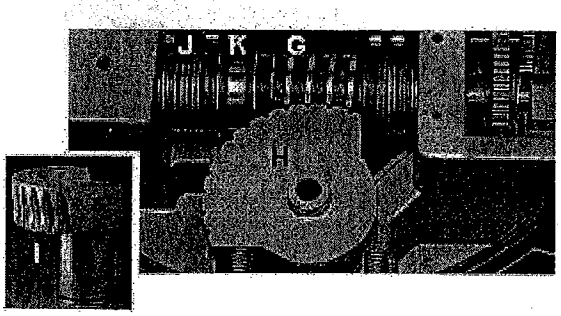

SELF-LOCKING OUTPUT DRIVE ASSEMBLY

The output drive assembly features a self-locking worm and worm gear drive which holds the valve in the desired position without the need for electromechanical braking systems. The worm shaft directly drives the worm gear. The Worm **(G)** is made of chrome-moly steel and the segmented Worm Gear **(H)** is a precision machined aluminum bronze casting. The worm gear is cast around the stainless steel Output Shaft **(I)** to become one part. The output shaft is the driving member that positions the valve. The worm gear drives the valve status display shaft which operates the infinitely adjustable cams to limit the electrical travel of the actuator.

MECHANICAL TORQUE LIMITING SYSTEM (Optional)

The mechanical torque limiting system consists of a Worm Shaft, A Worm **(G)**, a set of Torque Disc Springs **(J)** and a Shaft Groove **(K)** for torque limiting switches. The torque disc springs, located on each side of the worm, resist the linear movement of the worm shaft. The worm shaft is driven against the torque disc springs in response to output torque. The shaft groove actuates the torque limiting switches, located above in the Control Center, to start and stop the motor. (Please refer to the Control Center section for description of the Torque Limiting Switching System.) The precisely controlled movement of this system is the main torque limiting element of the R4.

COMMAND CENTER

MODULATING ACTUATOR FOR PRECISION CONTROL OF VALVE POSITION

The R4 Electric Actuator can be equipped with a Servo for precise control of valve position. The Servo consists of a circuit board and a feedback potentiometer assembly, which both fit entirely within the standard R4 actuator housing. The circuit board has a single terminal block for customer field wiring, and other terminals for internal connections to the actuator components. The feedback potentiometer is driven by a gearset connected to the actuator output drive.

SERVO OPERATION

The Servo can be easily configured by the factory or the customer to accept several types of input signals, such as 4-20 mADC, 0-10 VDC, 2-10 VDC or potentiometer control. The input signal electronically represents the *desired* actuator position, and the feedback potentiometer signal electronically represents the *actual* actuator position. The circuit board constantly compares the two signals, and if a difference is detected, drives the actuator in the proper direction until the signals are equal. When a balance is reached, the circuit board turns off the actuator motor. The worm gear then mechanically holds the valve in the desired position until the input signal is changed again.

SPEED CONTROL

Adjustments are provided for both open and closed speed control of the actuator motor. In addition, an approach control circuit senses when the actuator is about to reach the desired valve position, and pulses the motor to avoid overshooting the setpoint.

SERVO VOLTAGE SPIKE PROTECTION

Voltage spikes that can damage electrical equipment are very common in industrial locations. Large voltage spikes can be caused by interrupting the current to the actuator motor when the travel limit is reached. The output stage TRIACs of the Servo are protected against damage from voltage spikes by a special combination of:

- limit switch circuitry
- zero crossing detection
- metal oxide varistor (move) for transient voltage suppression.

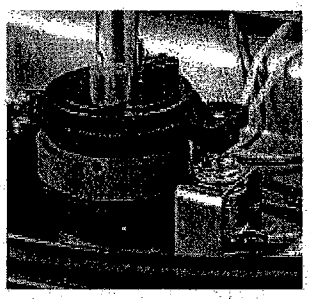

Feedback Potentiometer Gear

POTENTIOMETER CALIBRATION

Calibration of the feedback potentiometer is done through a unique gear arrangement that is easily accessible and eliminates the need of any special tools to make required adjustments. A simple adjustment of Bray's patented cam drive aligns the potentiometer as easily as a travel cam.

Also, the feedback potentiometer gear is specially shaped to disengage when the limits of the active region of the potentiometer are exceeded. This situation can occur when the manual override handwheel is turned past 90 degrees or below 0 degrees travel. The special gear prevents damage to the potentiometer from over rotation, and provides an easy reference for recalibration. Returning the actuator to the fully open or closed position and remeshing the potentiometer gears restores the proper alignment.

SERVO SPECIFICATIONS

NOTE: Servo is available for modulating service - continuous duty actuators only.
NOTE: "Standard" is the way the servo is set at the factory. "Configurable" means the customer, or the factory, can modify the Servo simply by moving switches, jumpers, etc.

Power Input:	115 VAC, 60 Hz (Standard) 230 VAC, 50 Hz (Configurable
Power Consumption:	2 Watts (not including actuator power)
Input Signal:	4-20 mADC into 250 Ohm (Standard) 0-10 VDC (Configurable) 2-10 VDC (Configurable) 135 Ohm or greater potentiometer (Configurable)
Calibration:	Circuit board: Zero, Span, Deadband, Open Speed, Close Speed Feedback: Potentiometer Drive Gear
Temperature Rating:	-40°F (-40°C) to 160°F (70°C)
Indicators:	Power (Yellow LED) Open Drive (Green LED) Close Drive (Red LED)
Control Characteristic:	Linear
Duty Cycle:	100%
Internal Feedback:	5 kOhm Potentiometer, gear driven

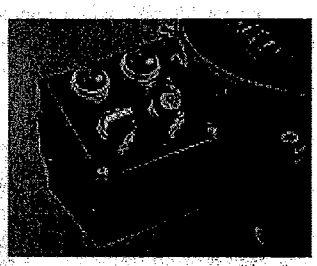

Control Station

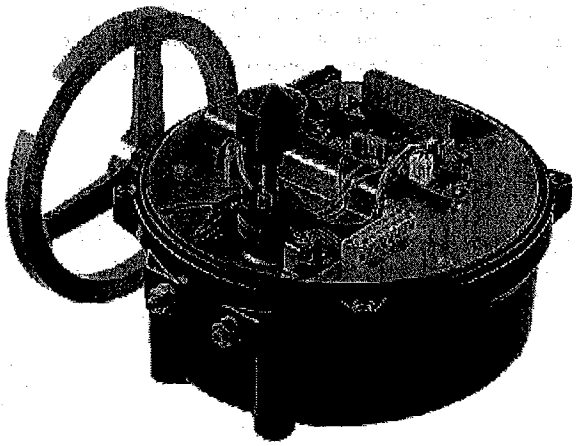

CONTROL STATION (Optional)

Bray has designed a manual local electrical control station that flush mounts directly to the R4.

The control station features:

- a local and remote control switch
- an open-stop-close switch
- two lights which locally indicate open and closed valve position.

The cover plate can be rotated in any 90 degree increment, allowing the customer to operate and view the station with ease. The enclosure is aluminum and weatherproof (NEMA 4, 4X, IP 65.) Additionally, the control station has captive cover bolts and two input connections available in the following thread connections: 3/4" NPT, M25 or PG16.

The control station is available with two different multi-pin, watertight electrical cable connections as previously stated.

DIMENSIONS

Actuator	A	B	C	D	E	F	G	H	J	K(UNC)	M(UNC)	N	P	Q
S70-003	7.5	5.6	3.0	5.1	1.9	1.94	.19	1/2	2.0	5/16-18	-	.75	.51	1.47
S70-008 S70-012	10.1 [257]	7.8 [198]	3.7 [94]	6.5 [165]	2.5 [64]	2.69 [68.3]	2.5 [64]	3/4 *	2.6 [66]	5/16-18 x Ø2.76	1/2-13 x Ø4.92	1.18 [30]	.87 [22]	1.82 [46]
S70-030 S70-050	12.1 [307]	9.5 [241]	5.6 [142]	7.2 [183]	2.9 [74]	3.19 [81]	.56 [14.2]	3/4 *	3.1 [79]	1/2-13 x Ø4.92	5/8-11 x Ø6.50	See Detail A		

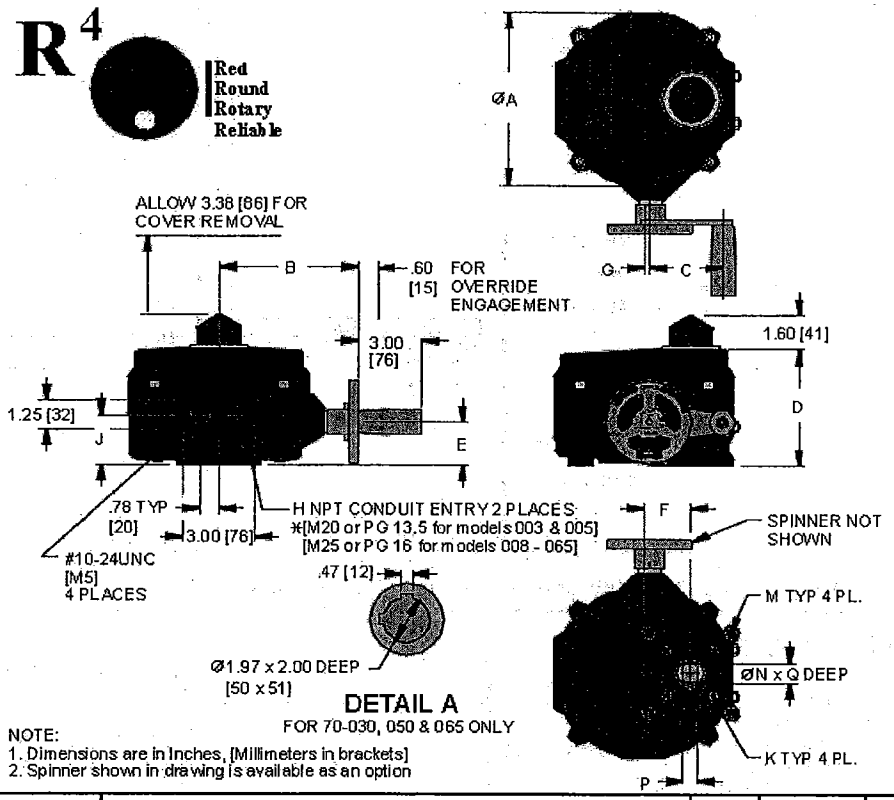

24 VDC available as an option, please consult your Bray representative or the factory.

** The duty cycle for intermittent on-off operation is 25%. The continuous duty actuator with Servo is rated for 100% modulating operation at an ambient temperature of 104°F (40°C.)

NOTE:
1. Dimensions are in Inches, [Millimeters in brackets]
2. Spinner shown in drawing is available as an option

Actuator Series	Torque Output Lb/in [Nm]	Single Phase Motors Current Rating (Amps At all Speeds (locked rotor)			Speed For 90° Operation In Seconds/Total Gear Ratio						Rim Pull lbs [kgs]	Bray Valve Sizes For Direct Mounting	Weight lbs [kgs]
					On-Off			Modulating Con-		Manual Override			
		VAC	Hz	Amps	Optional Speeds		Standard	Optional Speeds					
S70-003	300 [34]	120	50/60	1.4		8 sec. 1,392:1	15 sec. 2,413:1	30 sec. 5,070:1	60 sec. 11,200:1	30:1	11.4 [5]	2" thru 6"	12 [6]
		220	50/60	0.6									
S70-005	500 [57]	120	50/60	0.8			15 sec. 2,413:1	30 sec. 5,070:1	60 sec. 11,200:1	30:1	19.0 [9]	2" thru 6"	12 [6]
		220	50/60	0.5									
S70-008	800 [90]	120	50/60	2.1	6 sec. 681:1	10 sec. 1,080:1	15 sec. 1,640:1	30 sec. 3,340:1		30:1	13.0 [6]	2" thru 12"	28 [13]
		220	50/60	0.9									
S70-012	1200 [136]	120	50/60	2.1		10 sec. 1,080:1	15 sec. 1,640:1	30 sec. 3,340:1		30:1	20.0 [9]	2" thru 12"	28 [13]
		220	50/60	0.9									
S70-020	2000 [226]	120	50/60	2.1			15 sec. 1,640:1	30 sec. 3,340:1		30:1	33.0 [15]	2" thru 12"	28 [13]
		220	50/60	0.9									
S70-030	3000 [339]	120	50/60	3.0			18 sec. 2,080:1	30 sec. 3,340:1		30:1	33.0 [15]	8" thru 20"	48 [22]
		220	50/60	1.4									
S70-050	5000 [565]	120	50/60	3.0			18 sec. 2,080:1	30 sec. 3,340:1		30:1	55.0 [25]	8" thru 20"	48 [22]
		220	50/60	1.4									
S70-065	6500 [734]	120	50/60	3.0				30 sec. 3,340:1		30:1	72.0 [33]	8" thru 20"	48 [22]
		220	50/60	1.4									

TYPICAL WIRING DIAGRAMS

Wiring Diagrams are for REFERENCE ONLY. Do NOT use for field wiring.

ON – OFF With Optional Torque Limit Switches, Heater and Auxiliary Switches

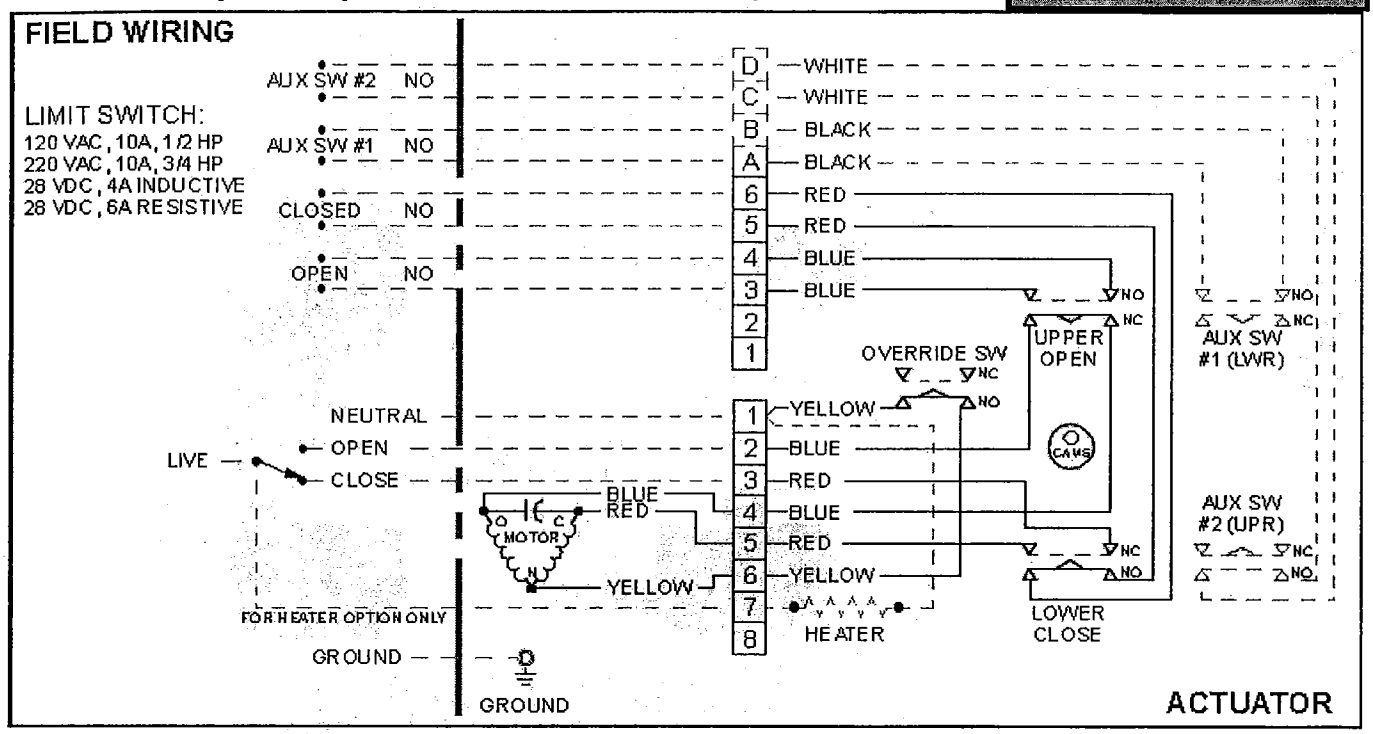

MODULATING – SERVO With Optional Torque Limit Switches and Heater

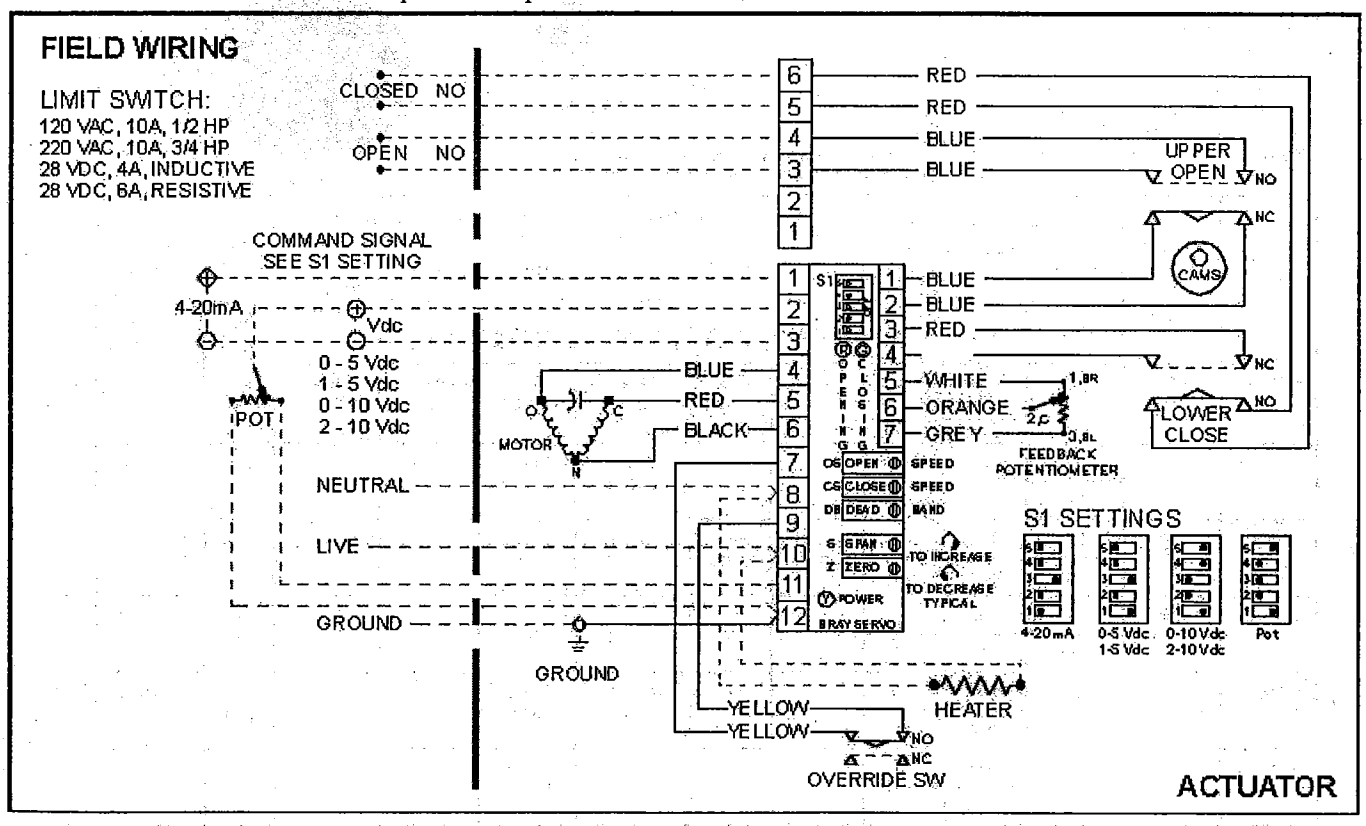

NOTES:

1) Actuators are shown in closed position.
2) Manual Override is not engaged.
3) Heater is optional
4) All switches are Single Pole, Double Throw, Double Break.
5) Terminal block accepts field wiring from 10-22 AWG. 12-22 AWG for Servo.

SPECIFICATIONS

The electric actuator shall be compact and low-profile to greatly reduce space requirements. The actuator shall feature ease of access to field wiring and adjustment. The actuator shall be built to withstand line vibration and shock without failure and shall bolt directly to Bray valve mounting flanges without using brackets.

MOTOR
A single phase permanent split-capacitor reversible motor with voltages of 120 and 220 VAC 50/60 Hz shall be standard. Motor insulation shall be Class F or better. The motor shall contain a built-in thermal overload protector of a bi-metallic strip in windings set a 338°F (170°C) with automatic reset. DC motors shall be available upon request.

DUTY CYCLE
The duty cycle for intermittent on-off operation shall be 25%. The continuous duty actuator with Servo shall be rated for 100% modulating operation at an ambient temperature of 104°F (40°C).

SPUR GEAR TRAIN SYSTEM
The actuator shall have a self-locking gear output drive mechanism. The spur gear train shall have precision cut multi-staged gears which will withstand locked rotor conditions. The spur gear train shall be permanently lubricated at the factory. The gear train shall drive a chrome-moly steel worm which drives the composite aluminum bronze segment gear / stainless steel output shaft.

WIRING
Actuator switches shall be pre-wired to a terminal block for ease of access and all internal wiring shall range from 10-22 AWG.

SWITCHES
All travel switches shall be Single Pole, Double Throw, Double Break Form Z type 10A at 125/250 VAC, 4A at 28 VDC inductive load, 6A at 28 VDC resistive load, UL and CSA approved. Travel Limit switches shall limit actuator in both the open and closed position of valve travel.

CAMS
Cams for each travel limit switch shall be infinitely adjustable by finger touch or screw driver, as provided by Bray's patented design.

CONDUIT ENTRIES
All units shall have 2 conduit entries. Conduit entries for models 003 and 005 shall be either 1/2"NPT, M20 or PG13.5. Conduit entries for models 008-065 shall be either 3/4"NPT, M25 or PG16.

MECHANICAL TRAVEL STOPS
Mechanical stainless steel travel stops shall be located outside the actuator for ease of adjustment and contain stainless steel lock nuts with O-ring seals to hold the travel stops in place. The travel stops shall limit the actuator movement to specific degrees of rotation.

MANUAL OVERRIDE
All units shall be equipped with an aluminum manual override handwheel to rotate the valve without electrical power. The override assembly shall ensure positive and fast manual operation without the use of extra tools or levers.

EMERGENCY SHUT-OFF
An automatic power cutout switch shall be provided to cut power to the motor when actuator handwheel is engaged for manual operation. This switch shall function as a safety emergency shutdown device.

ENCLOSURE
The die-cast aluminum enclosure shall be waterproof (NEMA 4, 4X, IP65) rated and high-quality polyester powder coated for exceptional corrosion, wear, impact and UV resistance. The enclosure cover shall have captive cover bolts therefore preventing time consuming problems due to lost or misplaced bolts.

VALVE STATUS DISPLAY
The actuator shall have a highly visible clear polycarbonate display prominently labeled and color coded to indicate valve position throughout the full range of travel.

TEMPERATURE RATING
Actuators shall be designed for temperature ranges of -40°F (-40°C) to +150°F (65°C).

OPTIONAL EQUIPMENT
The actuator shall be designed to include any of the following accessories as an option.

TORQUE LIMITING SYSTEM
with 2 SPDT-DB mechanical switches and 2 factory calibrated adjusting screws - the green adjusts the limit in the open direction, the red adjusts the limit in the closed direction. The worm shaft is driven against the torque disc springs in response to the output torque. the switches contact the worm shaft groove in response to predetermined loads and interrupt the electrical power to the motor. The switches can operate at any point of actuator travel.

HEATER
With the thermostat control to prevent condensation buildup. The heater is pre-wired to the terminal block. Rated output is 15 W at 110 or 240 VAC.

SERVO
For precise modulating control of valve position. A solid state circuit board compares the input signal with the feedback potentiometer signal and drives the actuator until a balance is reached. The Servo has a specially shaped potentiometer gear which prevents damage due to over rotation and features voltage spike protection. Adjustments are provided for both open and closed Speed Control of the actuator. Input Signals: 4-20mADC into 250 Ohm, 0-10 VDC, 2-10 VDC and 135 Ohm or greater potentiometer Adjustments: Zero, Span, Deadband, Open & Close Speed Internal feedback: 5 kOhm Potentiometer.

CONTROL STATION
For manual local electrical operation of the actuator. The Control Station flush mounts to the actuator and features a local and remote control switch, an open-stop-close switch, and two lights which locally indicate open and closed valve position. The enclosure is aluminum and weatherproof (NEMA 4, 4x, IP65.)

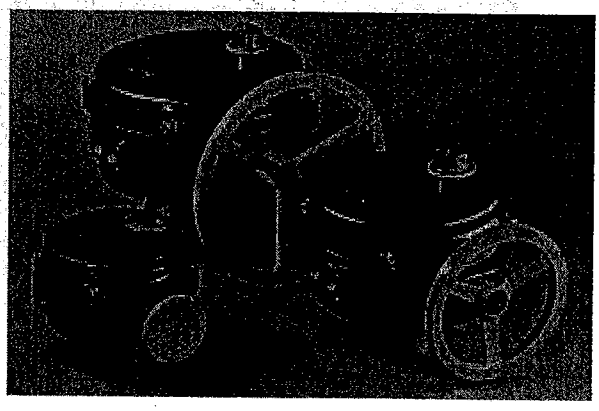

The Bray R4™ Electric Actuator – Series 70-005, 065, and 020

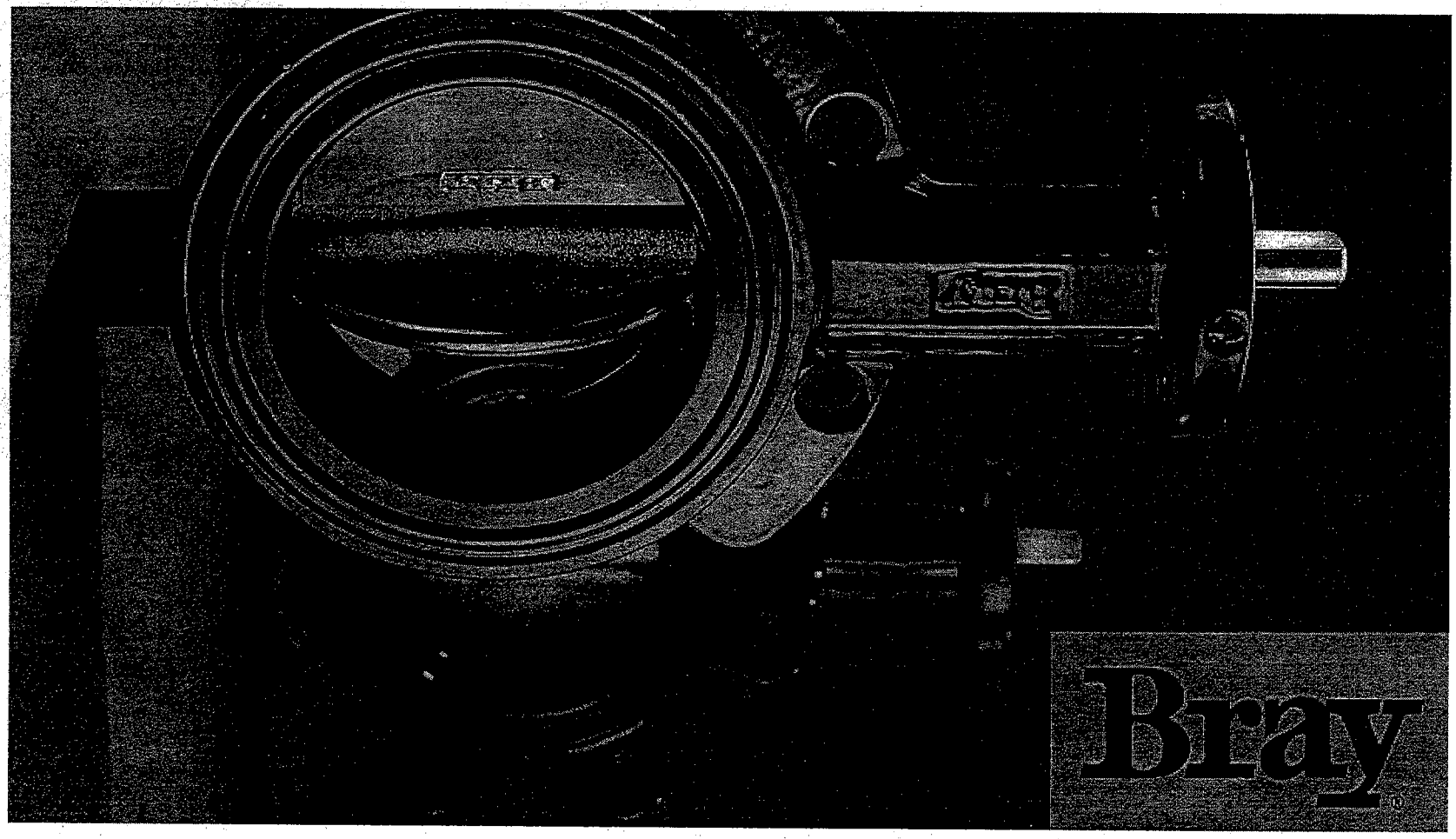

The
High
Performance
Company

BUTTERFLY VALVES
RESILIENT SEATED

SERIES 30/31 Wafer/Lug
2”-20” (50mm-500mm)

SERIES 30/31

2"-20" (50mm-500mm)
Bray® Controls is proud to offer a high quality line of butterfly valves to meet the requirements of today's market. Combining years of field experience, research and development, Bray has designed many unique features in the Series 30/31 not previously available. The results are longer service life, greater reliability, ease of parts replacement and interchangeability of components.

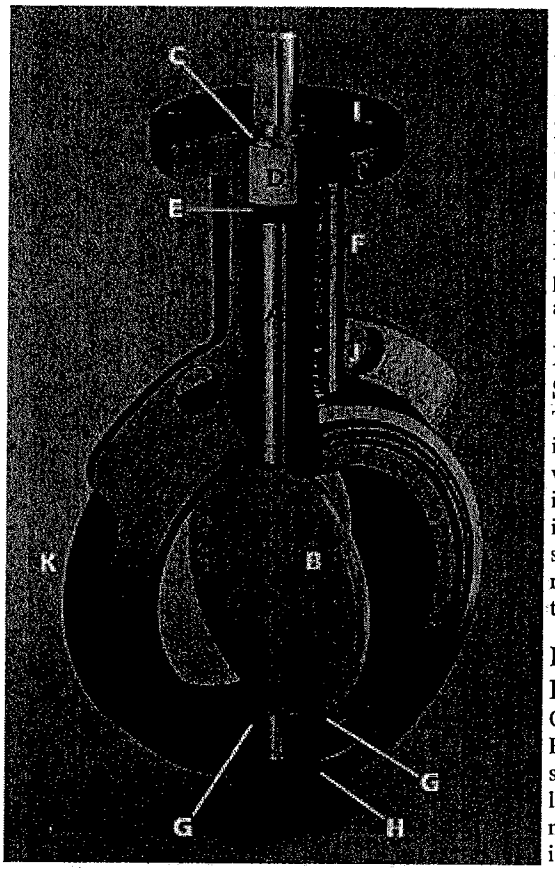

DISC AND STEM CONNECTION (A)

Features a high-strength through stem design. The close tolerance, double "D" connection that drives the valve disc is an exclusive feature of the Bray valve. It eliminates stem retention components being exposed to the line media, such as disc screws

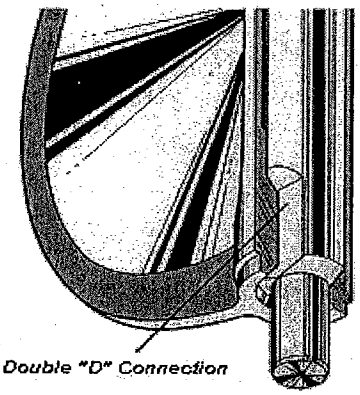

Double "D" Connection

and taper pins, which commonly result in leak paths, corrosion, and vibration failures. Disc screws or taper pins, due to wear and corrosion, often require difficult machining for disassembly. Disassembly of the Bray stem is just a matter of pulling the stem out of the disc. Without fasteners obstructing the line flow, the Series 30/31 Cv values are higher than many other valves, turbulence is reduced, and pressure recovery is increased. The stem ends and top mounting flange are standardized for interchangeability with Bray actuators.

DISC (B)

Casting is spherically machined, hand polished to provide a bubble-tight shut off, minimum torque, and longer seat life. The disc O.D. clearance is designed to work with all standard piping.

"SPIROLOX*" RETAINING RING (C)

The stem is retained in the body by means of a unique Stainless Steel "Spirolox®" retaining ring, a thrust washer and two C-rings, manufactured from brass as standard, stainless steel upon request. The retaining ring may be easily removed with a standard hand tool. The stem retaining assembly prevents unintentional removal of the stem during field service.

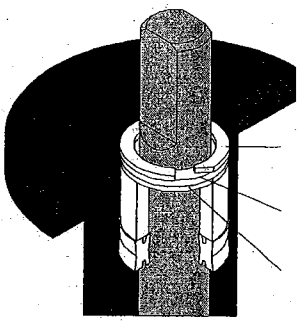

*"Spirolox®" designation is a registered trademark of TRW, Inc.

STEM BUSHING (D)

Non-Corrosive, heavy duty acetal bushing absorbs actuator side thrusts.

STEM SEAL (E)

Double "U" cup seal design is self-adjusting and gives positive sealing in both directions. Prevents external substances from entering stem bore.

NECK (F)

Extended neck length allows for 2" of piping insulation and is easily accessible for mounting actuators.

PRIMARY AND SECONDARY SEALS (G)

The Primary Seal is achieved by an interference fit of the molded seat flat with the disc hub. The Secondary Seal is created because the stem diameter is greater than the diameter of the seat stem hole. These seals prevent line media from coming in contact with the stem or body.

BRAY UNIQUE SEAT DESIGN (H)

One of the valve's key elements is Bray's unique "*Tongue-and-Groove*" seat design. This resilient seat features lower torque than many valves on the market today and provides complete isolation of flowing media from the body. The tongue-and-groove seat to body retention method is superior to traditional designs, making field replacement simple and fast. The seat is specifically designed to seal with slip-on or weld-neck flanges. The seat features a molded O-ring which eliminates the use of flange gaskets. An important maintenance feature is that all resilient seats for Bray butterfly valves Series 20, 21, 30, 31, 34 are completely interchangeable.

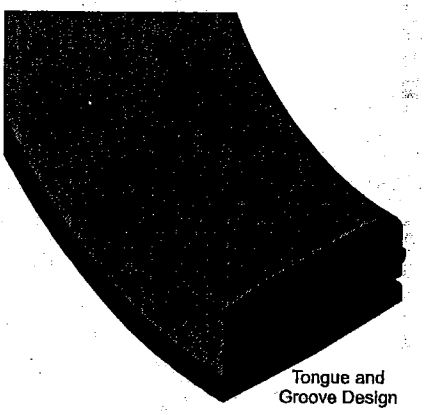

Tongue and Groove Design

SERIES 30/31

ACTUATOR MOUNTING FLANGE AND STEM CONNECTION (I)

Universally designed to ISO 5211 for direct mounting of Bray® power actuators and manual operators.

FLANGE LOCATING HOLES (J)

Provides quick and proper alignment during installation.

BODY (K)

One-piece wafer or lug style. Epoxy coating for excellent corrosion resistance. Bray valve bodies meet ANSI 150 pressure ratings for hydrostatic shell test requirements.

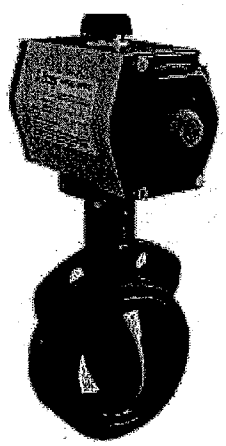

DESIGN FEATURES

Bray's Series 30 valve is a wafer version with flange locating holes, and the Series 31 is the companion lug version for dead-end service and other flange requirements. All Bray valves are tested to 110% of full pressure rating before shipment.

A major design advantage of Bray valve product lines is international compatibility. The same valve is compatible with most world flange standards - ANSI Class 125/150, BS 10 Tables D&E, BS4504 NP 10/16, DIN ND10/16, AS 2129 and JIS 10. In addition, the valves are designed to comply with ISO 5752 face-to-face and ISO 5211 actuator mounting flanges. Therefore, one valve design can be used in many different world markets. Due to a modular concept of design, all Bray® handles, manual gear operators and pneumatic and electric actuators mount directly to Bray valves. No brackets or adapters are required. Bray interchangeability and compatibility offers you the best in uniformity of product line and low-cost performance in the industry today.

EPOXY COATING CORROSION PROTECTION

Bray's standard product offers valve bodies with an epoxy coating, providing excellent corrosion and wear resistance to the valve's surface. The Bray epoxy coating is a hard, high gloss red finish.

- Chemical Resistance - resists a broad range of chemicals including: dilute aqueous acids and alkalies, petroleum solvents, alcohols, greases and oils. Offers outstanding resistance to humidity and water.
- Weatherability - outdoor tested resistant to ultra-violet radiation.
- Abrasion Resistance - excellent resistance to abrasion.
- Impact Resistance - withstands impact without chipping or cracking.

NYLON 11 COATING

Optionally available for valve bodies where outstanding protection and performance is needed. A thermoplastic produced from a vegetable base, this coating is inert to fungus growth and molds. Nylon 11 is *USDA Approved*, as well as certified to ANSI/NSF 61 for water service.

- Corrosion Resistance - superior resistance to a broad range of chemical environments. Salt spray tested in excess of 2,000 hours and seawater immersion tested for over 10 years without corrosion to metal substrates. Nylon 11 features a very low coefficient of friction and excellent resistance to impact and ultra-violet radiation.

DIMENSIONS SERIES 30 WAFER

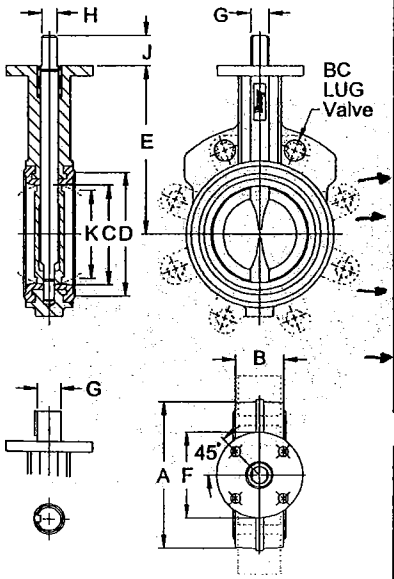

Valve Size								Mtg Flange Drilling						
ins	mm	A	B	C	D	E	F	BC	No. Holes	Hole Dia.	G	H	J	K
2	50	3.69	1.62	2.00	2.84	5.50	3.54	2.76	4	.39	.55	.39	1.25	1.32
2 1/2	65	4.19	1.75	2.50	3.34	6.00	3.54	2.76	4	.39	.55	.39	1.25	1.91
3	80	4.88	1.75	3.00	4.03	6.25	3.54	2.76	4	.39	.55	.39	1.25	2.55
4	100	6.06	2.00	4.00	5.16	7.00	3.54	2.76	4	.39	.63	.43	1.25	3.57
5	125	7.12	2.12	5.00	6.16	7.50	3.54	2.76	4	.39	.75	.51	1.25	4.63
6	150	8.12	2.12	5.75	7.02	8.00	3.54	2.76	4	.39	.75	.51	1.25	5.45
8	200	10.50	2.50	7.75	9.47	9.50	5.91	4.92	4	.57	.87	.87	1.25	7.45
10	250	12.75	2.50	9.75	11.47	10.75	5.91	4.92	4	.57	1.18	.87	2.00	9.53
12	300	14.88	3.00	11.75	13.47	12.25	5.91	4.92	4	.57	1.18	.87	2.00	11.47

SERIES 31 LUG

Lug Bolting Data		
BC	No. Holes	Thrds UNC-2B
4.75	4	5/8-11
5.50	4	5/8-11
6.00	4	5/8-11
7.50	8	5/8-11
8.50	8	3/4-10
9.50	8	3/4-10
11.75	8	3/4-10
14.25	12	7/8-9
17.00	12	7/8-9

Valve Size								Mtg Flange Drilling						
ins	mm	A	B	C	D	E	F	BC	No. Holes	Hole Dia.	G	H	KEY SIZE	K
14	350	17.05	3.00	13.25	15.28	13.62	5.91	4.92	4	.57	1.38	2.00	.39x.39	13.04
16	400	19.21	4.00	15.25	17.41	14.75	5.91	4.92	4	.57	1.38	2.00	.39x.39	14.85
18	450	21.12	4.25	17.25	19.47	16.00	8.27	6.50	4	.81	1.97	2.50	.39x.47	16.85
20	500	23.25	5.00	19.25	21.59	17.25	8.27	6.50	4	.81	1.97	2.50	.39x.47	18.73

Lug Bolting Data		
BC	No. Holes	Thrds UNC-2B
18.75	12	1-8
21.25	16	1-8
22.75	16	11/8-7
25.00	20	11/8-7

SELECTION DATA

FLANGE REQUIREMENTS

Bray valves are designed for installation between ANSI Class 125/150 lb. weld-neck or slip-on flanges, BS 10 Tables D&E, BS 4504 NP 10/16, DIN ND 10/16, AS 2129 and JIS 10, either flat faced or raised faced. While weld-neck flanges are recommended, Bray has specifically designed its valve seat to work with slip-on flanges, thus eliminating common failures of other butterfly valve designs. When using raised face flanges be sure to properly align valve and flange. Type C stub-end flanges are not recommended.

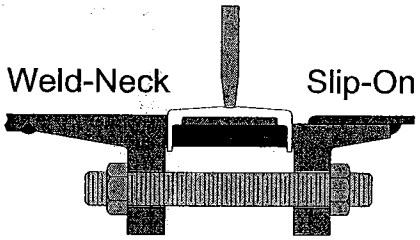

Note: Flanges on both sides of installed valve must be the same type

PRESSURE RATINGS*

For bi-directional bubble-tight shut off, disc in closed position:

Inches	mm	psig	bar
2-12	50-300	175	12
14-20	350-500	150	10

For Dead-end Service Applications:
With *downstream flanges installed* or with *vulcanized seats,* the dead-end pressure ratings are equal to valve bi-directional ratings as stated above. With no downstream flanges or with seats that are not vulcanized, the dead-end pressure rating for 2"-12" valves is 75 psi (5 bar) for 14"-20" valves, 50 psi (3.5 bar.)

* Pressure Ratings are based on standard disc diameters. For low pressure application, Bray offers a standard reduced disc diameter to decrease seating torques and to extend seat life, thus increasing the valve's performance and reducing actuator costs for the customer.

VELOCITY LIMITS

For On/Off Services
Fluids - 30 ft/sec (9m/s)
Gases - 175 ft/sec (54m/s)

Cv VALUES-VALVE SIZING COEFFICIENT

Valve Size		Disc Position (degrees)								
ins	mm	90°	80°	70°	60°	50°	40°	30°	20°	10°
2	50	144	114	84	61	43	27	16	7	1
21/2	65	282	223	163	107	67	43	24	11	1.5
3	80	461	364	267	154	96	61	35	15	2
4	100	841	701	496	274	171	109	62	27	3
5	125	1376	1146	775	428	268	170	98	43	5
6	150	1850	1542	1025	567	354	225	129	56	6
8	200	3316	2842	1862	1081	680	421	241	102	12
10	250	5430	4525	2948	1710	1076	667	382	162	19
12	300	8077	6731	4393	2563	1594	1005	555	235	27
14	350	10538	8874	5939	3384	2149	1320	756	299	34
16	400	13966	11761	7867	4483	2847	1749	1001	397	45
18	450	17214	14496	10065	5736	3643	2237	1281	507	58
20	500	22339	18812	12535	7144	4536	2786	1595	632	72

Cv is defined as the volume of water in U.S.G.P.M. that will flow through a given restriction or valve opening with a pressure drop of one (1) p.s.i. at room temperature. Recommended control angles are between 25°-70° open. Preferred

EXPECTED SEATING/UNSEATING TORQUES (Lb.-Ins.)

		Full-Rated Pressure Valve				Reduced Disc
Valve Size		rP (PSI)				rP (PSI)
ins	mm	50	100	150	175	50
2	50	125	130	135	140	125
21/2	65	195	205	215	220	195
3	80	260	275	290	297	260
4	100	400	425	450	462	267
5	125	615	670	725	755	410
6	150	783	871	953	1003	537
8	200	1475	1650	1825	1915	983
10	250	2240	2520	2800	2940	1493
12	300	3420	3870	4320	4545	2280
14	350	4950	5700	6450	-	3300
16	400	6400	7700	9000		4267
18	450	7850	9850	11850	-	5267
20	500	10300	12900	15500		6867

Valve Torque Rating - Bray has classified valve torque ratings according to 3 types: non-corrosive lubricating service, general service, and severe service. Torques listed above are for general services.Consult Bray for torque information corresponding to specific application.

TO USE TORQUE CHART, NOTE THE FOLLOWING:
1) For Bray valves, Series 20, 21, 30, 31 and 34.
2) Review Technical Bulletin No. 1001, Expected Seating/Unseating Torque's, for explanation of the 3 service classes and their related seating/unseating torque values for given pressure differentials of Full-Rated and Reduced Disc Diameter valves.
3) Dynamic Torque values are not considered. See Technical Bulletin No. 1002 for evaluation of Dynamic Torque values vs. Seating/Unseating Torque values.
4) Do not apply a safety factor to above torque values when determining actuator output torque requirement.
5) For 3 way assemblies where on valve is opening and other is closing, multiply torque by 1.5 factor.

SELECTION DATA

RECOMMENDED SPECIFICATIONS FOR BRAY SERIES 30/31 SHALL BE:

- Epoxy coated, cast iron, wafer or lug bodies.
- With flange locating holes that meet ANSI 125/150 (or BS 10 tables D&E, BS 4504 NP 10/16, DIN ND 10/16, AS 2129 and JIS 10) drillings.
- Through-stem direct drive double "D" design requiring no disc screws or pins to connect stem to disc with no possible leak paths in disc/stem connection.
- Stem mechanically retained in body neck and no part of stem or body exposed to line media.
- Tongue-and-groove seat design with primary hub seal and a molded o-ring suitable for weld-neck and slip-on flanges. Seat totally encapsulates the body with no flange gaskets required.
- Spherically machined, hand polished disc edge and hub for minimum torque and maximum sealing capability.
- Equipped with non-corrosive bushing and self-adjusting stem seal.
- Bi-directional and tested to 110% of full rating.
- Bi-directional pressure ratings:
  2"-12" valves: 175 PSI
  14"-20" valves: 150 PSI
  Lug bodies for dead end service
  With downstream flanges or vulcanized seats, pressure ratings are equal to bi-directional ratings as stated above.
  With no downstream flanges or non-vulcanized seats:
  2"-12" valves: 75 psi.
  14"-20" valves: 50 psi.
- No field adjustment necessary to maintain optimum field performance
- The valve shall be Bray Series 30 wafer / 31 lug or equal.

TEMP. RANGE OF SEATS

Type	Maximum	Minimum
EPDM	+250°F(121°C)	-40°F(-40°C)
Buna-N	+212°F(100°C)	0°F(-18°C)
FKM*	+400°F(204°C)	0°F(-18°C)

MATERIALS SELECTION

2"-20" (50mm-500mm)

BODY:

- Cast Iron ASTM A126 Class B
- Ductile Iron ASTM A536
- Cast Steel ASTM A216 WCB
- Aluminum ASTM B26

SEAT:

- Buna-N - Food Grade
- EPDM - Food Grade
- FKM*
- White Buna-N - Food Grade

STEM:

- Coated Carbon Steel
- 416 SS ASTM A582 Type 416
- 304 SS ASTM A276 Type 304
- 316 SS ASTM A276 Type 316
- Monel

DISC:

- Aluminum Bronze ASTM B148-954
- Coated Ductile Iron ASTM A536 Gr. 65-45-12
- Ductile Iron,Nylon 11 Coated, ASTM A536 Gr. 65-45-12
- Ductile Iron, Halar® Coated, ASTM A536 Gr. 65-45-12
- 316 SS ASTM A351 CF8M
- Hastelloy® C-276 ASTM B575 Alloy N10276

WEIGHTS

Valve Size		Series	Series
ins	mm	30	31
2	50	5.5	7.0
2 1/2	65	7.0	8.0
3	80	7.5	9.0
4	100	11.5	15.0
5	125	14.0	20.0
6	150	17.0	23.0
8	200	34.0	42.0
10	250	49.0	66.0
12	300	67.0	88.0
14	350	95.0	114.0
16	400	135.0	166.0
18	450	200.0	226.0
20	500	260.0	305.0

Weights are in lbs.

COMPONENTS

No.	Qty.	Description
1	1	Body
2	1	Seat
3	1	Disc
4	1	Stem
5	1	Stem Seal
6	1	Stem Bushing
7	2	Stem Retainer
8	1	Thrust Washer
9	1	Retaining Ring

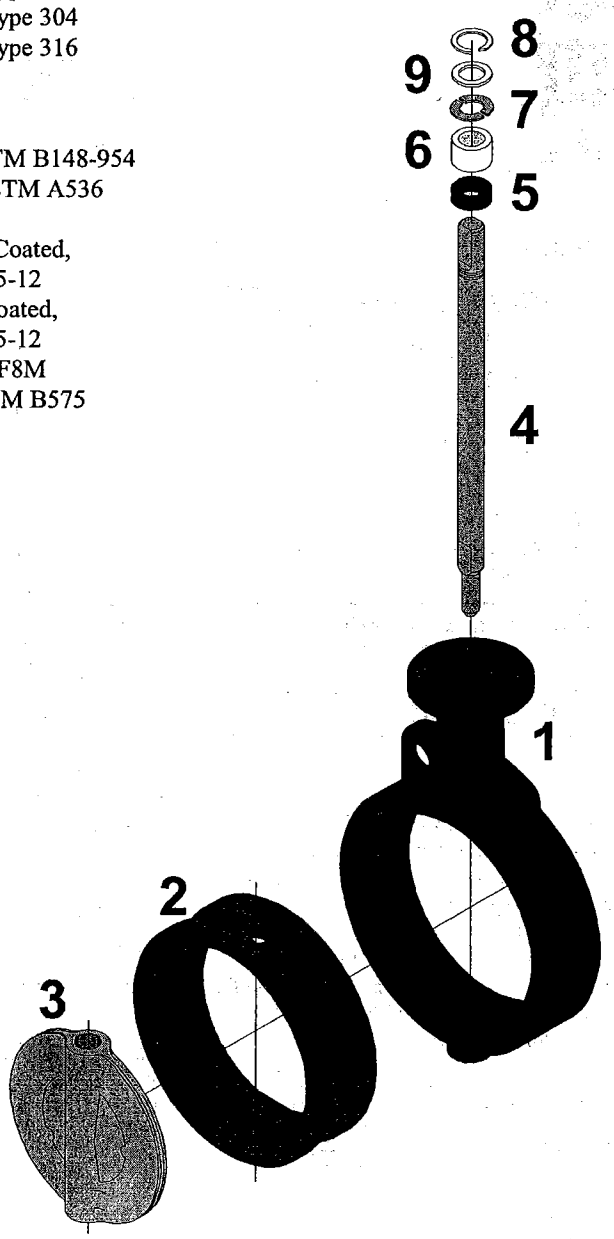

*FKM is the ASTM D1418 designation for Fluorinated Hydrocarbon Elastomers (also called Fluoroelastomers.)
Hastelloy® is a registered trademark of Haynes International, Inc.
Halar® is a registered trademark of Ausimont U.S.A., Inc.

INSTALLATION

Position the disc in the partially open position, maintaining the disc within body face-to-face. Place the body between flanges and install flange bolts. *Do not use flange gaskets.*

Before tightening flange bolts, carefully open the disc to the full open position to ensure proper alignment and clearance of the disc O.D. with the adjacent pipe I.D. Leave disc in the full open position and tighten flange bolts per required specification. Once bolts are tightened, carefully rotate disc to closed position to ensure disc O.D. clearance.

MAINTENANCE AND REPAIR

The many Bray features minimize wear and maintenance requirements. No routine lubrication is required. All components-stem, disc, seat, bushing, stem seal, etc., are field replaceable, no adjustment is needed. If components require replacement, remove the valve from the line by placing the disc near the closed position, spread the flanges, support the valve, then remove the flange bolts. No valve maintenance, including removal of manual or power actuators, should be performed until the piping system is completely depressurized.

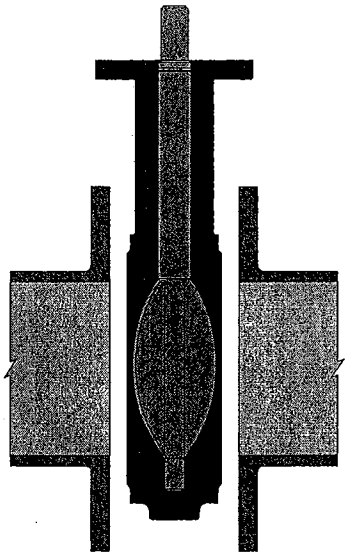

Disc in the Near Closed Position

DISASSEMBLY

Remove handle, gear operator , or actuator from actuator mounting flange. Remove "Spirolox®" retaining ring. Remove stem with its thrust washer and two C-ring stem retainers. Remove bushing and seal. Remove the disc from the seat, protecting disc edge at all times. Push the seat into an oval shape, then remove the seat from the body.

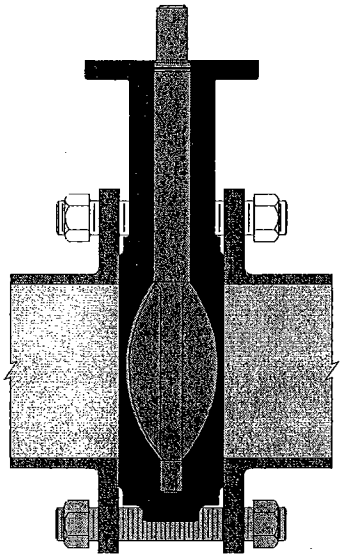

Disc in the Partially Open Position

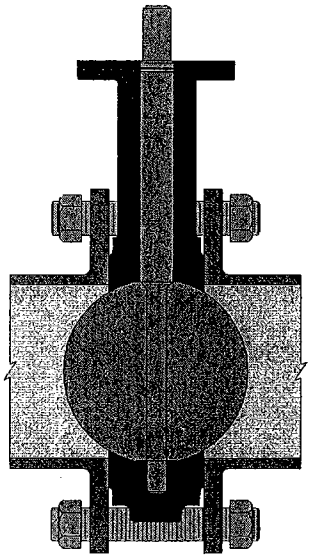

Disc in the Full Open Position

Assembly

Push the valve seat into an oval and push it into the body with seat stem holes aligned to body stem holes. Push stem into the stem hole of body. For aid in inserting disc, slightly protrude stem beyond the I.D. of the top of the seat. Install a light coating of food grade silicone oil (for silicone free applications use soap and water) on the I.D. of seat. Insert the disc into the seat by lining up the disc hole with the stem hole of the seat. Note: the broached double "D" flats in the disc must be toward the bottom of valve body. (Take special care when lining disc up with stem.) With a downward pressure and rotating the stem back and forth, push the stem until the stem touches the bottom of the body stem hole. Make certain that when pushing the stem through disc bottom, the broached flats of stem and disc are aligned. After the stem has engaged the disc, but before the stem is firmly seated in the body, replace the stem seal and bushing. Install the two C-ring stem retainers in the groove in the stem and thrust washer on top of the C-ring. Seat the stem firmly in the body and install the "Spirolox®" retaining ring back into position.

Bray® CONTROLS

All statements, technical information, and recommendations in this bulletin are for general use only. Consult Bray representatives or factory for the specific requirements and material selection for your intended application. The right to change or modify product design or product without prior notice is reserved. Patents applied for in u.S. and foreign countries.
Bray® is a registered trademark of BRAY INTERNATIONAL., Inc.

A Subsidiary of BRAY INTERNATIONAL, INC.
13333 Westland East Blvd., Houston, Texas 77041
Phone: 281. 894.5454 Fax: 281.894.9499
©1995 Bray International. All rights reserved

FPZ, Inc.

REGENERATIVE BLOWERS

SCL 50 SH

Standard features

- Low weight cast aluminum construction.
- Quiet operation with integral inlet and outlet muffling.
- Recognized TEFC motor.
- High efficiency / low noise impeller design.
- No lubrication / maintenance required.
- Allowed ambient: +5 °F to +105 °F.
- Mountable in any plane.

Max. continuous operating Pressure	**6.5 psig / 181.0 In. WG**
Vacuum	**11.1 In. Hg / 150.9 In. WG**

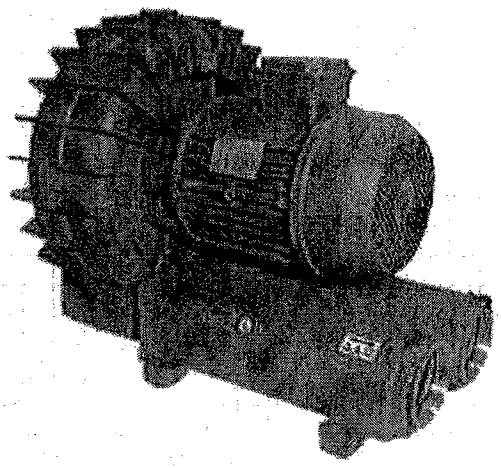

Options

- Remote drive models (belt or coupling).
- Special voltages.
- Surface treatment or plating.
- Gas tight sealing.
- Special designs available.

Accessories

- Inlet and/or inline filters.
- Additional inlet/outlet silencers.
- Safety valves.
- Flow converting devices.
- Optional connectors.

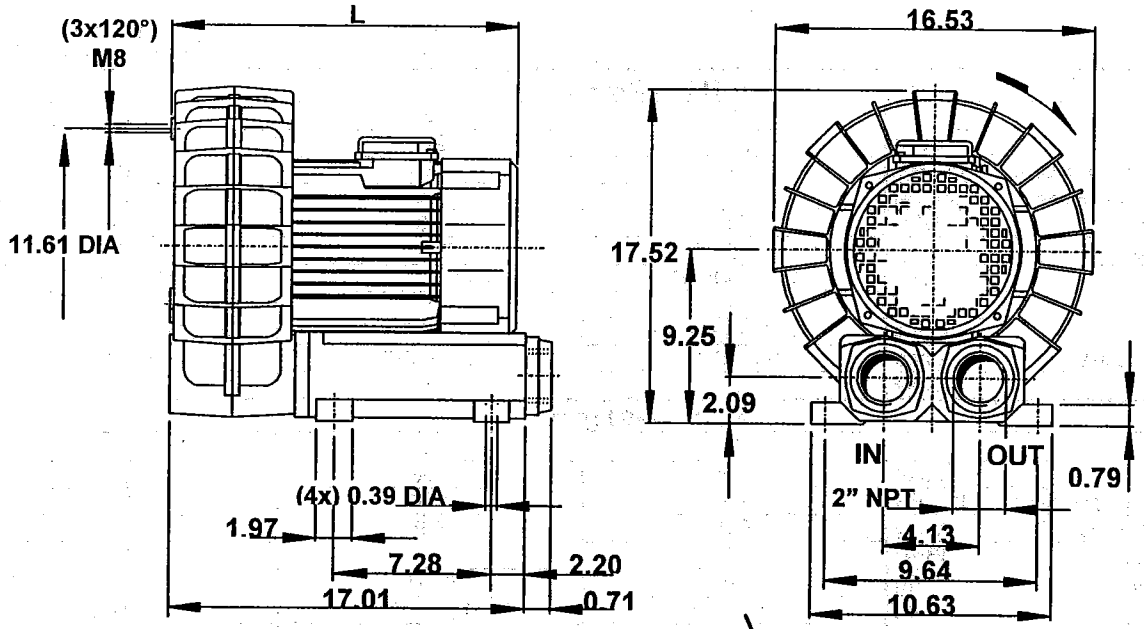

Dimensions in inches

Motor power Hp 60 Hz	5	7 1/2	10
Hp 50 Hz	4 1/6	6 1/4	8 1/3
L	18.11	19.88	19.88
Weight Lbs.	92.40	114.40	128.70

FPZ, Inc.

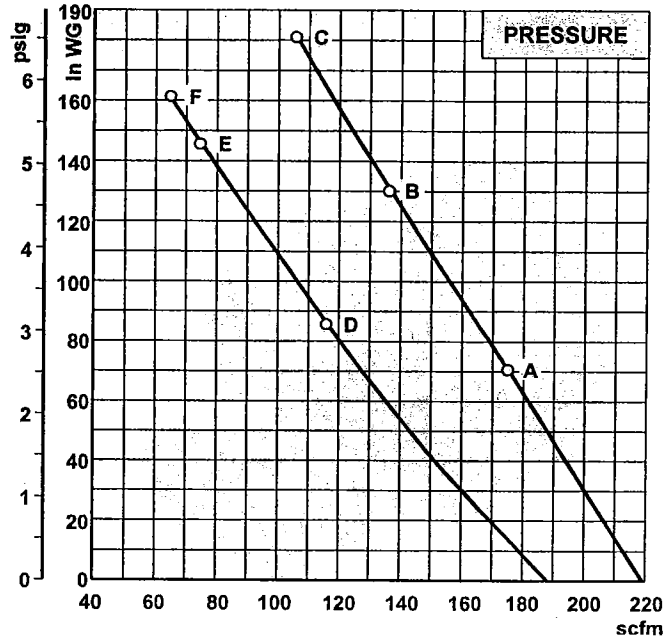

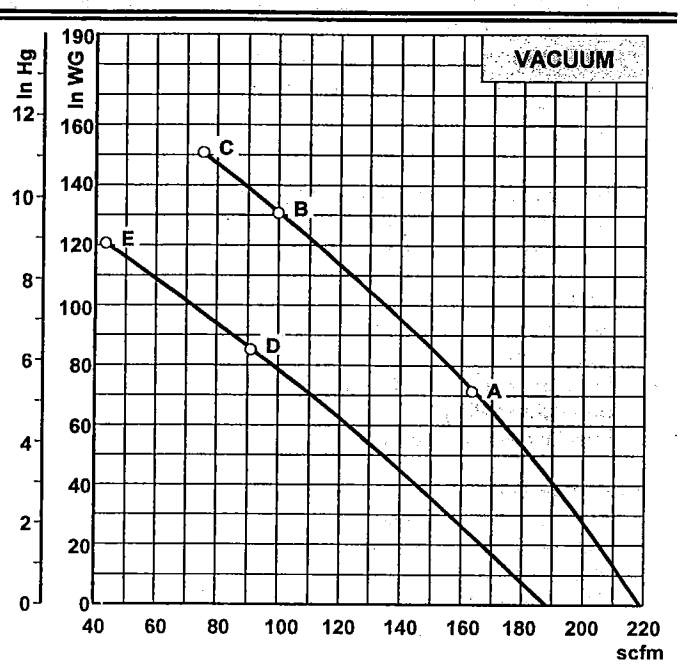

Notes:

- **Curves indicate performance rated for continuous operation.**
- Performance data based on ambient / inlet air temperature of 68 °F and barometric pressure of 29,92 In. Hg
- Performance values may vary by ±10%
- Sound level measured at 1 m distance with inlet and outlet piped.
- Specifications are subject to change without notice.

SCL 50 SH

60 Hz – 3500 rpm				
Reference		**A**	**B**	**C**
Maximum airflow	scfm	219	219	219
Maximum continuous pressure	In. WG	70	130	181
Maximum continuous vacuum	In. Hg	5.2	9.6	11.1
Maximum sound level	dB(A)	78	78	78
Motor horsepower	**Hp**	**5**	**7 1/2**	**10**
Standard voltage	Volt	208-230/460	208-230/460	208-230/460
Phase		3	3	3
Rated F.L. current	Amps	15,5-14,0/7,0	20,8-18,8/9,4	27,6-25,0/12,5
Rated locked rotor current	Amps	109-98/49	125-113/57	193-175/88
Insulation	Class	F	F	F
50 Hz – 2900 rpm				
Reference		**D**	**E**	**F**
Maximum airflow	scfm	188	188	188
Maximum continuous pressure	In. WG	86	146	161
Maximum continuous vacuum	In. Hg	6.3	8.9	-
Maximum sound level	dB(A)	75	75	75
Motor horsepower	**Hp**	**4 1/6**	**6 1/4**	**8 1/3**
Standard voltage	Volt	200/400	200/400	200/400
Phase		3	3	3
Rated F.L. current	Amps	15,5/7,0	20,8/9,4	27,6/12,5
Rated locked rotor current	Amps	109/49	125/57	193/88
Insulation	Class	F	F	F

FPZ, Inc. Inlet Filters

FPZ inlet filters are used for pressure applications. The inlet filters combine filtration and sound attenuation into a compact package. Inlet filters consist of a filter cartridge enclosed by a carbon steel weather hood. Elements are easily serviceable by simply removing the weather hood.

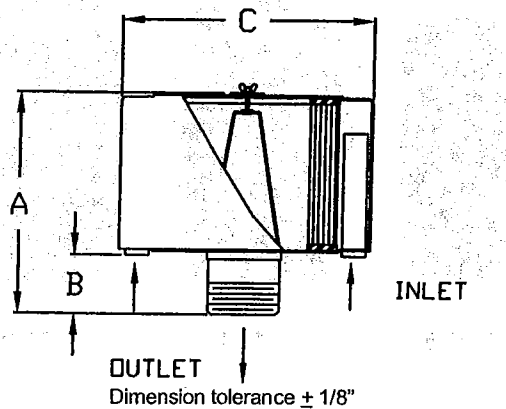

Dimension tolerance ± 1/8"

TYPICAL NOISE ATTENUATION – FS SERIES

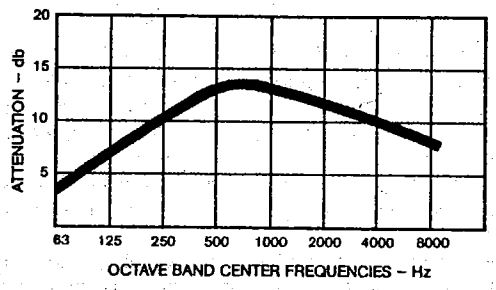

- Noise attenuation may vary due to the wide range of applications and machines

FEATURES & SPECIFICATIONS

- Polyester: 99%+ removal efficiency standard to 5 micron
- Paper: 99%+ removal efficiency standard to 2 micron
- Fully drawn weatherhood - no welds to rust or vibrate apart
- Tubular silencing design - tube is positioned to maximize attenuation and air flow while minimizing pressure drop
- Durable carbon steel construction with baked enamel finish and powder coated weatherhood
- Interchangeable elements: Polyester, Paper
- Low pressure drop center bracket and outlet pipe design
- Temp (continuous): min -15°F (-26°C) max 220°F (104°C)
- Filter change out differential: 10"-15" H_2O Over Initial Delta P

OPTIONS (Inquiries Encouraged)

- Various media available
- 1/8" & 1/4" tap holes
- Pressure Drop Indicator
- Available in ***Stainless Steel***
- Epoxy coated housings
- Hot dipped galvanized housings
- Special connections, NPT

Polyester Element	Paper Element	MPT Outlet	DIMENSIONS - inches A	B	C	Used on models	No. of Tubes	Approx. Wt. lbs
FS-15-050	FS-14-050	1/2"	4	1 1/2	6	10DL	1	2
FS-15-075	FS-14-075	3/4"	4	1 1/2	6	15DH	2	2
FS-15-100	FS-14-100	1"	4	1 1/2	6	O6	3	2
FS-19P-125	FS-18P-125	1 1/4"	6 5/8	1 5/8	6	V3,20DH	5	3
FS-19P-150	FS-18P-150	1 1/2"	6 5/8	1 5/8	6	V4,30SH,30DH,40DH	5	4
FS-31P-200	FS-30P-200	2"	7 1/4	2 1/4	10	V5,40SH,50DH	5	8
FS-231P-200	FS-230P-200	2"	12 1/4	2 1/4	10	V6,45SH,50SH,50DH	7	14
FS-231P-300	FS-230P-300	3"	13	3	10	60SH,65SH,70SH,65DH,70DH	9	15
FS-235P-400	FS-234P-400	4"	14	4	16	80SH,80DH,90DH	9	30
FS-245P-400	FS-244P-400	4"	14	4	16	90SH	9	31

FPZ, Inc. • 2091 N. Port Washington Dr. • Grafton, WI • 262-375-7360 ph • 262-375-7361 fax • email: usa@fpz.com
www.fpz.com

FPZ, Inc.
2091 N. PORT WASHINGTON Rd
GRAFTON, WI, 53024-9747
Tel. (262) 375-7360
Fax (262) 375-7361
E-mail usa@fpz.com

SAFETY VALVES

VRL

The VRL valves are designed to protect blowers and / or motors from over pressurization or excess vacuum. When there is over pressurization, the valve opens and discharges to the outside. When there is excess vacuum, the valve opens and takes flow from outside.
The valves have been designed for low pressure / low vacuum, with minimal difference between the initial value at which the valve begins to open and its fully-opened position. The valves are supplied with 2 different springs to maximize their efficiency.
These compact valves, made of aluminum alloy, are both easy to install and calibrate. The valves are designed to operate in a wide range of capacities. The VRL can be plumbed to divert excess primary flow through a secondary external outlet when working in pressure conditions or to pipe-in a secondary flow when working in vacuum.
Maximum efficiency is achieved by keeping operating values (flow versus pressure or vacuum) within the **operating range** (shaded area on graph). Capacity refers to air having a density equal to 0.075 lbs./cu.ft .

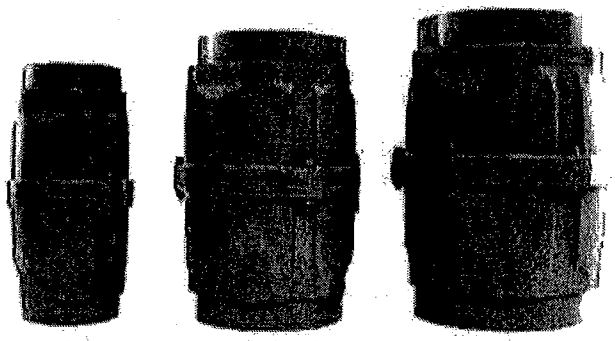

VRL6 VRL8 VRL9

OPERATING RANGE

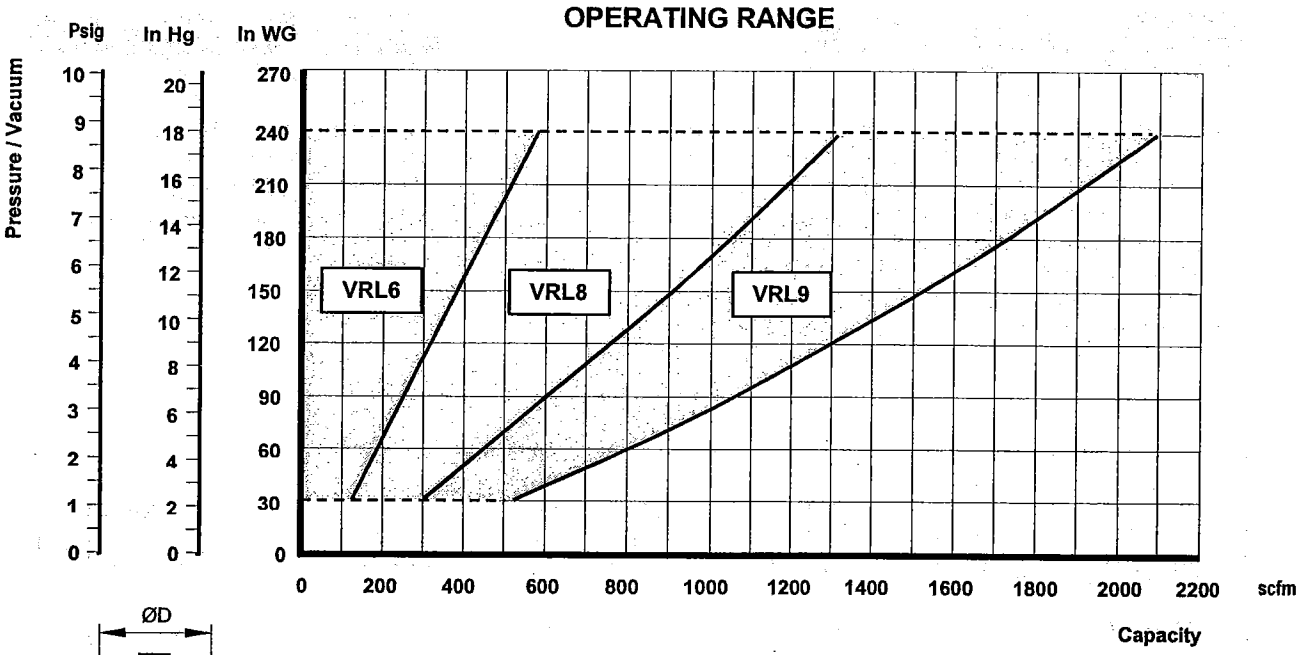

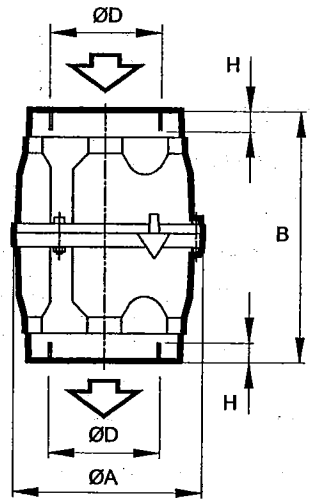

OVERALL DIMENSIONS

TYPE	ND	D	A	B	H	WEIGHT (Lbs)
VRL6	2"	2" NPT	3.94	6.57	0.47	2.1
VRL8	3"	3" NPT	5.31	7.48	0.59	4.2
VRL9	4"	4" NPT	6.30	8.11	0.71	5.7

- Dimensions in inches.
- Specifications subject to change without prior notice.

GOULDS PUMPS

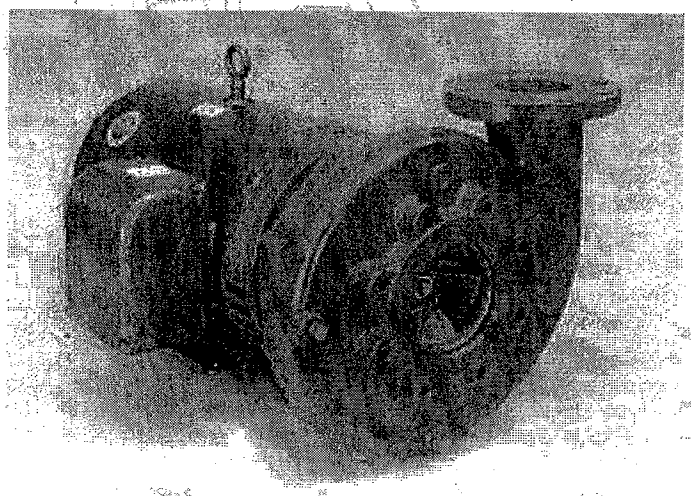

3656/ 3756 M & L-Group

Cast Iron Bronze Fitted End-Suction Flanged Pumps

Bombas horizontales con brida en hierro fundido o hierro fundido y bronce

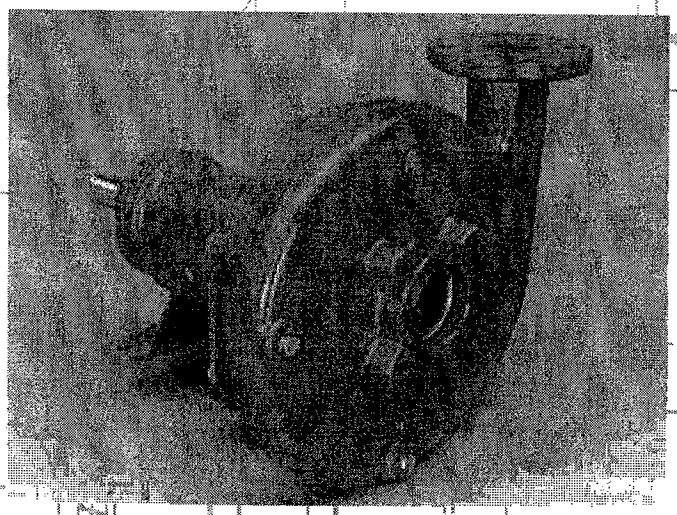

A Full Range of Product Features

The 3656 and 3756 M & L-Group pumps from Goulds have been designed with technical benefits to meet the needs of users in a variety of water supply, recirculation, and cooling applications.

- The model 3656 offers close coupled design for space saving and simplified maintenance.
- The model 3756 offers a bearing frame mounted design for flexibility of installation and drive arrangements.
- SAE drive sizes 1 through 5 available on all pumps.
- Back pull-out to reduce maintenance down time.
- Standard Type 21 mechanical seal for both reliability and availability. Carbon/ceramic/BUNA standard, with other faces and elastomers available.
- Available in packed stuffing box design with Teflon™ impregnated packing, split Teflon lantern ring, tapped flush connection and 2 piece investment cast interlocking gland, all standard.
- Available in all iron or bronze fitted construction for application versatility.
- Replaceable wearing components include stainless steel shaft sleeve and casing and hub wear rings to maintain peak efficiency.
- Enclosed impeller design, dynamic balancing and renewable wear rings reduce losses affecting performance and pump life.
- 125 lb. ANSI flange suction/ discharge connections and casing rotation for piping connection versatility.
- NPT threaded connections are supplied on 1½ x 2 – 10 and 2½ x 3 – 8 models.
- Optional rigid carbon steel bedplate, sheet metal coupling guard and T. B. Woods spacer coupling for 3756 models.
- Standard NEMA motor frame, JM shaft extension (mechanical seal) JP shaft extension (packed box), C face mounting, single phase or three phase, 3500 or 1750 RPM for 60 Hz, 2900 or 1450 RPM for 50 Hz. Open drip-proof and totally enclosed fan cooled.
- Optional explosion proof and high efficiency motors are available.

Goulds Pumps is ISO 9001 Registered.

Una amplia gama de variadas características

Las bombas 3656 y 3756 del Grupo M y L de Goulds han sido diseñadas con beneficios técnicos para satisfacer las necesidades de los usuarios en variadas aplicaciones de suministro y recirculación de agua y aplicaciones de refrigeración.

- *El modelo 3656 cuenta con diseño de acoplamiento corto para ahorrar espacio y simplificar el mantenimiento.*
- *El modelo 3756 cuenta con diseño de montaje sobre bastidor que ofrece gran flexibilidad en los arreglos de instalación y accionamiento.*
- *Desmontaje posterior que reduce el tiempo de inactividad por mantenimiento.*
- *Sello mecánico estándar Tipo 21 brinda gran confiabilidad y asegura la disponibilidad. Estándar de carbono/cerámica/ BUNA, también se encuentran disponibles con otras caras y elastómeros.*
- *Disponibles en diseño con caja prensaestopas con empaque de Teflon TM impregnado, aro de linterna de Teflon dividido, conexión de lavado con derivación y glándula fundida de conexión de inversión de 2 piezas, todo estándar.*
- *Fabricadas en todo hierro o con accesorios de bronce para una mayor versatilidad de aplicación.*
- *Los componentes de desgaste reemplazables incluyen los anillos de desgaste de la carcasa y del rodete y la camisa del eje, de acero inoxidable, para mantener la eficiencia pico.*
- *El diseño de impulsor encerrado, balanceo dinámico y anillos de desgaste reemplazables reducen las pérdidas que afectan el desempeño y la vida de la bomba.*
- *Conexiones de succión y descarga con brida ANSI de 125 lbs. y carcasa rotativa para mayor versatilidad de conexión.*
- *Los modelos 1½ x 2 – 10 y 2½ x 3 – 8 cuentan con conexiones NPT.*
- *Placa de asiento rígida de acero al carbono, protector de acoplamiento de chapa metálica y acoplamiento espaciador T. B. Woods disponibles como opción en los modelos 3756.*
- *Bastidor de motor NEMA estándar, extensión de eje JM (sello mecánico), extensión JP (caja prensaestopas), montaje en cara C, monofásico o trifásico, 3500 ó 1750 RPM para 60 Hz, 2900 ó 1450 para 50 Hz. Abierto a prueba de filtraciones o totalmente encerrado enfriado por ventilador.*
- *Motores a prueba de explosiones y de alta eficiencia disponibles como opción.*

Performance Coverage
Campo de desempeño

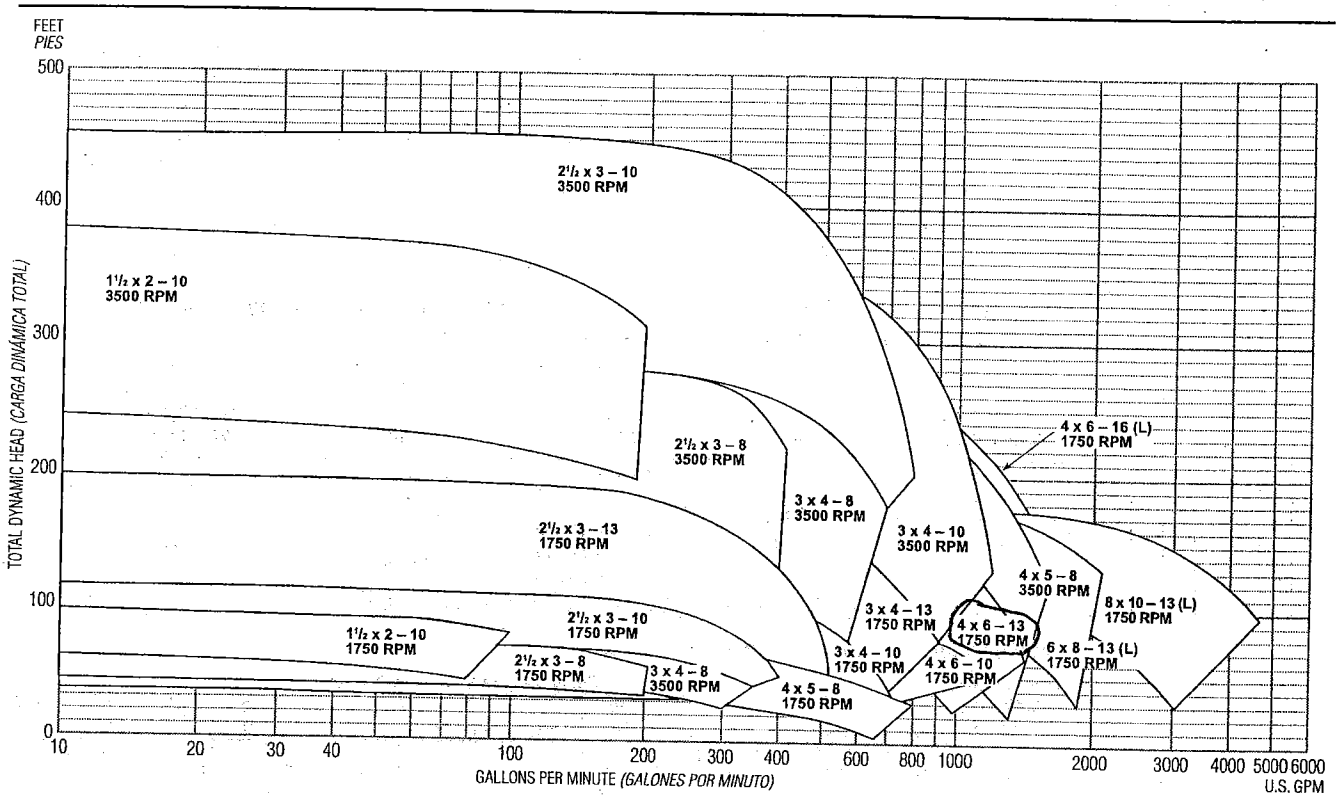

3656/3756 M & L-Group Numbering System
Sistema de numeración del Grupo M y L, modelos 3656/3756

The various versions of the 3656 and 3756 M & L-Group are identified by a product code number on the pump label. This number is also the catalog number for the pump. The meaning of each digit in the product code number is shown below. Not all combinations are possible; consult your G&L distributor for specific requirements.

Las diferentes versiones de los modelos 3656 y 3756 del Grupo M Y L se identifican con un número de código de producto en la etiqueta de la bomba. Este número es también el número de catálogo de la bomba. A continuación se ilustra el significado de cada dígito en el código del producto. No todas las combinaciones son posibles, consulte a su distribuidor G&L para requisitos específicos.

Example Product Code, *Ejemplo del código de producto*

11 BF 2 L 5 A 0

Mechanical Seal/Packed Box and O-ring Material, *Materiales del sello mecánico/empaque y anillo en O*

For Optional Mechanical Seal modify catalog order no. with Seal code listed below.

Para sellos mecánicos optativos, modificar el número de pedido del catálogo con los códigos de sello que se indican a continuación.

Seal Code *Código del sello*	Rotary *Rotativo*	Stationary *Estacionario*	Elastomers *Elastómeros*	Metal Parts *Partes metálicas*
0	Carbon *Carbono*	Ceramic, *Cerámica*	BUNA-N	Type 316 SS *Acero inoxidable tipo 316*
2		Ni-Resist	EPR	
3		Ceramic, *Cerámica*	Viton, *Vitón*	
4		Silicon Carbide *Carburo de silicio*	Viton, *Vitón*	
9	Packed Box Design with BUNA O-ring, *Diseño con empaque y anillo en O BUNA*			

Impeller Option Code, *Código de opción de impulsor*

Impeller Code *Código del impulsor*	Pump Size, *Tamaño de la bomba*												
	8 Dia.	7 Dia.	11 Dia.	13 Dia.	16 Dia.	12 Dia.	14 Dia.	10 Dia.	17 Dia.	15 Dia.	18 Dia.	■ 19 Dia.	■ 20 Dia.
A	10 1/16"	7 15/16"	10 1/16"	13 1/16"	8 1/16"	10 1/16"	13 1/16"	7 7/8"	10 1/16"	12 7/8"	■ 13"	13"	16"
B	9 3/16	7 7/16	9 7/8	12 3/4	7 7/16	9 3/4	12 9/16	7 3/4	9 9/16	12 1/2	■ 12 1/2	12 3/4	
C	8 3/8	7 3/16	9 5/8	11 7/8	7 7/16	9	12 5/16	7 1/2	9 1/8	12 1/4	■ 12 5/16	12 3/8	
D	7 3/4	6 13/16	9	11 3/8	6 3/4	8 5/8	12	7 1/4	8 11/16	11 7/8	■ 11 7/8	11 15/16	
E	7 1/4	6 3/8	8 5/8	9 7/8	6 3/8	8 1/8	11 3/4	7	8 1/8	11 3/8	11 5/8	11 11/16	
F	7	6 3/16	8 1/4	9 3/8	5 15/16	7 5/8	11 5/16	6 3/4	7 3/4	11 1/16	11 1/8	11 1/4	
G			8		5 1/2	*9 1/8	10 3/4	6 1/2		10 7/8	10 7/8	10 7/8	
H			7 5/8		5 1/8	*8 3/4	10 1/8	6 1/16		10 1/2	10 1/2	9 13/16	
J			7 1/8		4 5/8	*8 9/16	9 1/8	5 3/4		10 1/4	10		
K						*8 1/2	8 11/16			9 7/8	9 1/2		
L						*7 3/4	8			9 3/8			
M						*7 5/8	7 9/16						
N						*7 1/4							
P						*7 1/16							
R						*6 3/4							

Driver, *Elemento motor*

1 = 1 PH, ODP 3 = 575 V, ODP 5 = 3 PH, TEFC 7 = 3 PH, XP 9 = 3 PH, TEFC, Premium efficiency

2 = 3 PH, ODP 4 = 1PH, TEFC 6 = 575 V, TEFC 8 = 575 V, XP 0 = 1 PH, XP *Eficiencia superior*

1PH = monofásico, 3PH = trifásico

HP Rating, *Potencia nominal, HP*

G = 2 J = 5 L = 10 N = 20 Q = 30 S = 50 U = 75 W = 125

H = 3 K = 7½ M = 15 P = 25 R = 40 T = 60 V = 100 X = 150

Driver: Hertz/Pole/RPM, *Elemento motor: Hertz/Polos/RPM*

1 = 60 Hz, 2 pole, 3500 RPM 3 = 60 Hz, 6 pole, 1180 RPM 5 = 50 Hz, 4 pole, 1450 RPM

2 = 60 Hz, 4 pole, 1750 RPM 4 = 50 Hz, 2 pole, 2900 RPM

Material (Packed Box in AI or BF), ***Material*** *(Caja prensaestopas en AI o BF)*

AI = All iron BF = Bronze fitted *AI = Todo hierro BF = con accesorios de bronce*

Pump Size, *Tamaño de bomba*

8 = 1½ x 2 – 10 11 = 2½ x 3 – 10 12 = 3 x 4 – 10 10 = 4 x 5 – 8 16 = 3 x 4 – 8 **18 = 6 x 8 – 13 19 = 8 x 10 – 13 20 = 4 x 6 – 16**

7 = 2½ x 3 – 8 13 = 2½ x 3 – 13 14 = 3 x 4 – 13 15 = 4 x 6 – 13 **17 = 4 x 6 – 10 (BF Only)** ***(Accesorios de bronce únicamente)***

* Indicates 3500 RPM impeller for the 3 x 4 – 10, all others are 1750 RPM.

** Indica un impulsor de 3500 RPM para el 3 x 4 – 10, todos los demás son de 1750 RPM.*

■ Indicates "L" Group pump (1780 RPM, 60 to 150 HP)

■ *Indica una bomba Grupo "L". (1780 RPM, de 60 a 150 HP)*

Drive Options, *Opciones de mando*

Substitute, *Substituto*	Description, *Descripción*
FRM	Bearing frame mount, *Montaje del bastidor del cojinete*
SAE1	SAE #1 mount, *Montura SAE #1*
SAE2	SAE #2 mount, *Montura SAE #2*
	SAE #3 mount, *Montura SAE #3*
SAE4	SAE #4 mount, *Montura SAE #4*
	SAE #5 mount, *Montura SAE #5*

SAE drive number is determined by the engine flywheel housing size.

El número del mando SAE se determina por el tamaño de la caja del volante del motor.

Performance Curves – 60 Hz, 1750 RPM
Curvas de desempeño – 60 Hz, 1750 RPM

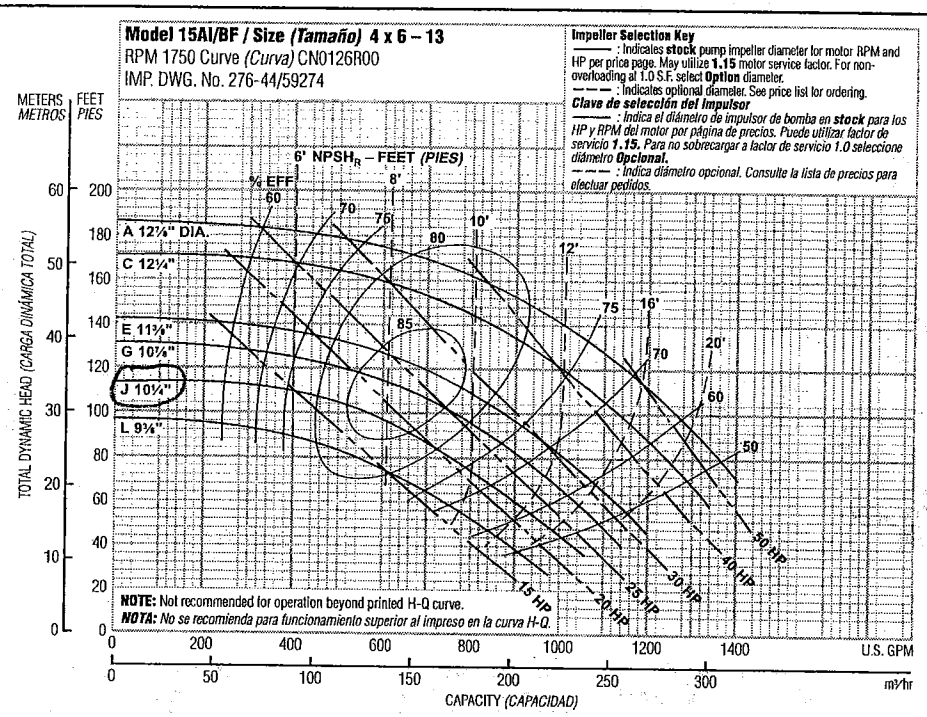

Optional Impeller *Impulsor optativo*	
Ordering Code ***Código de pedido***	**Dia.** ***Diá.***
A	12⅞"
C	12¼
E	11⅜
G	10⅞
J	10¼
L	9⅜

NOTE: Pump will pass a sphere to 7/16" diameter.

NOTA: *La bomba dejará pasar una esfera de hasta 7/16 de pulgada de diámetro.*

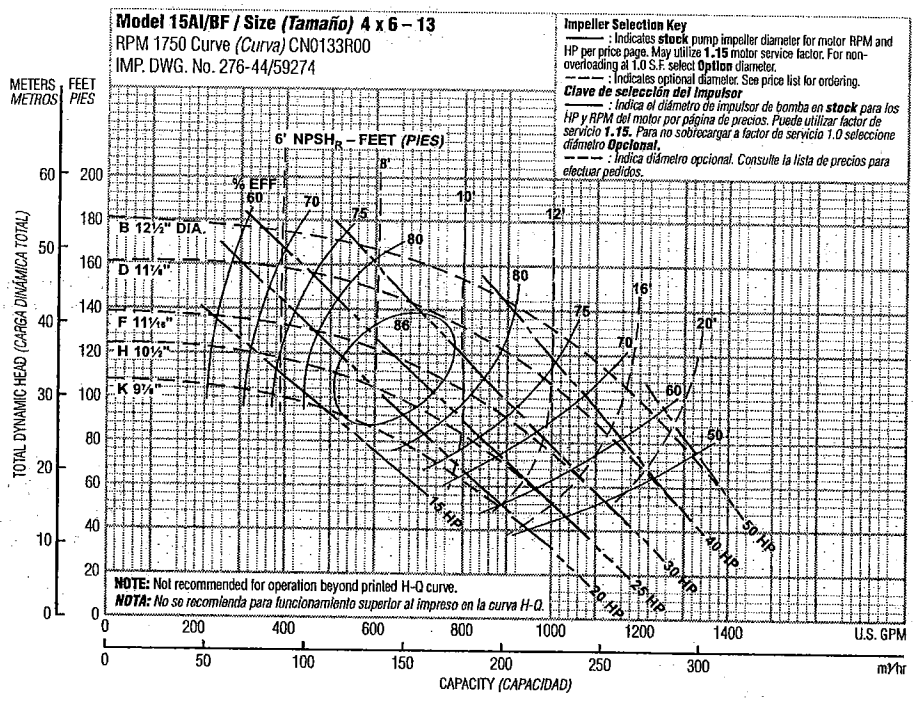

Optional Impeller *Impulsor optativo*	
Ordering Code ***Código de pedido***	**Dia.** ***Diá.***
B	12½"
D	11⅞
F	11 1/16
H	10½
K	9⅞

NOTE: Pump will pass a sphere to 7/16" diameter.

NOTA: *La bomba dejará pasar una esfera de hasta 7/16 de pulgada de diámetro.*

3656 M & L-Group Materials of Construction
Materiales de construcción - Grupo M y L, modelo 3656

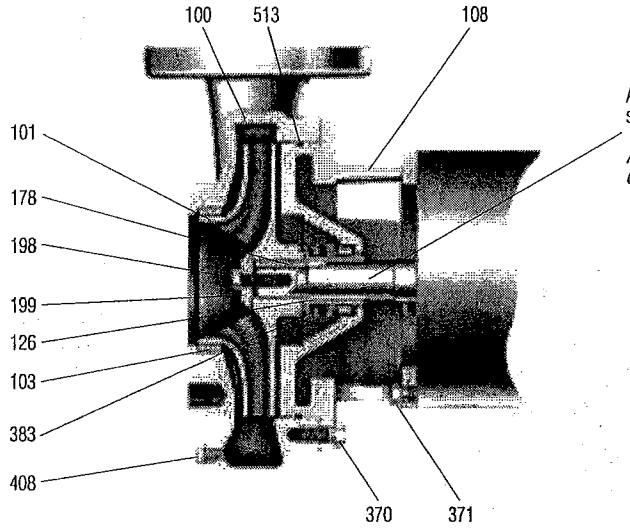

ANSI 1045 steel motor shaft extension (typical),

ANSI 1045 Extensión del eje del motor de acero (típica)

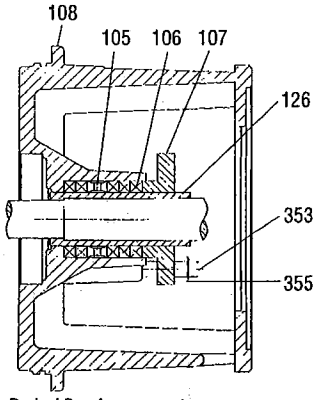

Packed Box Arrangement
Caja prensaestopas

Item No. *No. Ítem*	Description *Descripción*	Materials, *Materiales* All Iron *Todo hierro*	Bronze Fitted *Accesorios de bronce*
100	Casing, *Carcasa*	1001	1001
101	Impeller, *Impulsor*	1001	1102
103	Casing wear ring, *Anillo de desgaste de la carcasa*	1001	1102
108	Adapter/seal housing, *Adaptador/ Cubierta del sello*	1001	1101
126	Shaft sleeve, *Camisa del eje*	AISI Type 300 Series SS *Acero inoxidable serie AISI tipo 300*	
178	Impeller key, *Chaveta del impulsor*	AISI Type 300 Series SS *Acero inoxidable serie AISI tipo 300*	
198	Impeller bolt, *Tornillo del impulsor*	AISI Type 300 Series SS *Acero inoxidable serie AISI tipo 300*	
199	Impeller washer, *Arandela del impulsor*	AISI Type 300 Series SS *Acero inoxidable serie AISI tipo 300*	
370	Hex head cap screw (adapter to case), *Tornillo de cabeza hexagonal (del adaptador a la cubierta)*	Steel SAE 1200 Grade 5 *Acero SAE 1200 grado 5*	
371	Hex head cap screw (adapter to motor), *Tornillo de cabeza hexagonal (del adaptador al motor)*	Steel SAE 1200 Grade 5 *Acero SAE 1200 grado 5*	

	Seal Code *Código del sello*	Rotary *Rotativo*	Stationary *Estacionario*	Elastomers *Elastómeros*	Metal Parts *Partes metálicas*
383	0	Carbon *Carbono*	Ceramic *Cerámica*	BUNA-N	Type 316 SS *Acero inoxidable tipo 316*
383	1	Carbon *Carbono*	Ni-Resist	EPR	Type 316 SS *Acero inoxidable tipo 316*
383	2	Carbon *Carbono*	Ceramic *Cerámica*	Viton *Vitón*	Type 316 SS *Acero inoxidable tipo 316*
383	3	Carbon *Carbono*	Silicon Carbide *Carburo de silicio*	Viton *Vitón*	Type 316 SS *Acero inoxidable tipo 316*
383	9	Packed box design with BUNA O-ring, *Diseño con empaque y anillo en O BUNA*			Type 316 SS *Acero inoxidable tipo 316*

408	Pipe plug ¼" or ⅜", *Tapón de tubos de ¼ de pulgada ó ⅜ de pulgada*	Steel *Acero*	Bronze *Bronce*
513	O-ring, *Anillo en O*	BUNA-N	

Material Code *Código de material*	Engineering Standard *Norma de ingeniería*
1001	Cast iron ASTM A48 CL20 *Hierro fundido ASTM A48 CL20*
1102	Bronze ASTM B584, C87500 *De bronce ASTM B584, C87500*

Packed Box Arrangement, *Caja prensaestopas*

Item No. *No. Ítem*	Description *Descripción*	Materials *Materiales*
105	Lantern ring *Aro de linterna*	Teflon™
106	Packing, 5 rings *Empaquetadura, 5 aros*	Teflon Impregnated *Impregnado de Teflon*
107	Gland, *Casquillo*	AISI 316SS
126	Shaft sleeve *Camisa del eje*	AISI Type 300 Series Stainless Steel *Acero inoxidable serie AISI tipo 300*
353	Gland stud *Perno del casquillo*	AISI Type 300 Series Stainless Steel *Acero inoxidable serie AISI tipo 300*
355	Gland nut *Tuerca del casquillo*	AISI Type 300 Series Stainless Steel *Acero inoxidable serie AISI tipo 300*

NOTE:
Seal housing wear ring (item number 203) not shown. See repair parts page for detail. (Required for all models except 3 x 4 – 10.)

NOTA:
El anillo de desgaste del compartimiento de sello (ítem número 203) no se muestra. Consulte la página de piezas de repuesto para mayor detalle. (Se requiere para todos los modelos con excepción del 3 x 4 – 10).

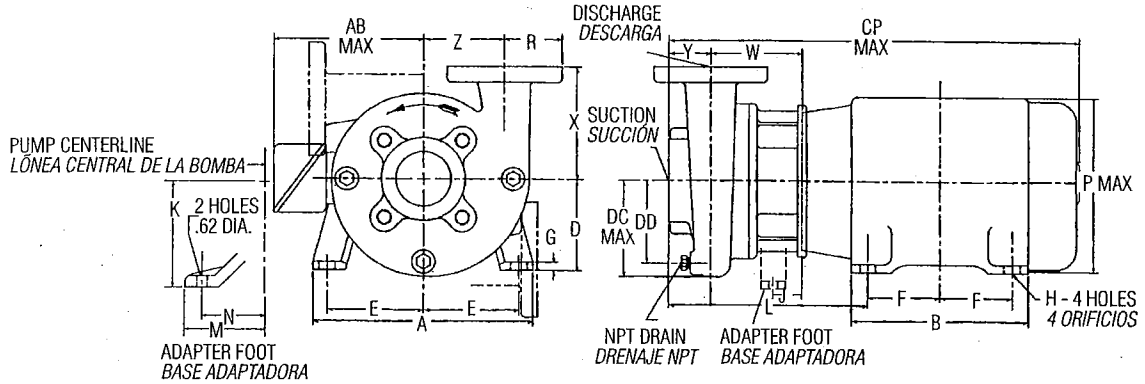

Pump Dimensions and Weights, ***Peso y dimensiones de la bomba***

Pump *Bomba*	Suction *Succión*	Discharge *Descarga*	CP Max.	DC Max.	DD	J	K	M	N	R	NPT Drain *Drenaje NPT*	W	X	Y	Z	Wt. (lbs.) *Pesos (libras)*	Motor Frame, *Bastidor del motor* L 210	250/280	320	360	400	440
1½ x 2 – 10	2*	1½*	34⅛	6¾	5⅞	—	—	—	—	1¼	¼	7⅞	6	3	5½	105	16⅜	12¾	—	—	—	—
2½ x 3 – 8	3*	2½*	34⅝	6¼	5¼	—	—	—	—	1 13/16		8		3⅜	5	90	16⅞	13¼	—	—	—	—
2½ x 3 – 10	3	2½	37⅜	7⅛	6	—	—	—	—	3½	⅜	7⅞	7½	2¾	5½	95	16⅛	12½	15⅛	16½	—	—
2½ x 3 – 13			34⅛	8⅞	7⅝	—	—	—	—				9	3	7½	155	16⅜	12¾	—	—	—	—
3 x 4 – 8	4	3	34 7/16	6¼	5⅜	—	—	—	—	3¾	¼	8 3/16	7	3	5⅝	90	16 11/16	13 1/16	16½	—	—	—
3 x 4 – 10			34¼	7⅜	6½	—	—	—	—		⅜	8	7½		5½	110	16½	12⅞	—	—	—	—
3 x 4 – 13			37⅛	9½	8⅛	—	—	—	—			7⅞	9		7½	170	16⅜	12¾	—	—	—	—
4 x 5 – 8	5	4	38⅛	6⅞	5¾	—	—	—	—	4½		8⅜	8		5	110	16⅞	13¼	16⅝	17¼	—	—
4 x 6 – 10	6		34¾	8⅝	7½	—	—	—	—			8⅜	8½	3⅛	7	145	17	13⅜	—	—	—	—
4 x 6 – 13			35⅞	9¾	8⅛	—	—	—	—			8⅛	9	3	7½	185	16⅜	12¾	16⅛	—	—	—
■ 4 x 6 – 16			47⅛	12¾	11	1⅞	9¾	8	7			8⅝	12	4	10½	390	—	—	—	—	9¼	—
■ 6 x 8 – 13	8	6	45⅞	12¾	10½	2⅜	7½	6½	5½	5½		8⅜	11	3	8¾	290	—	—	—	—	18	—
■ 8 x 10 – 13	10	8	48⅛	14¾	13	2⅜	7½	6½	5½	6¾		8⅝	12¾	4	10	520	—	—	—	—	19¼	21⅛

*Denotes NPT connection. All other connections are for use with ANSI class 150 mating flanges.
** Indica conexión NPT Las demás conexiones deben usarse con bridas de contacto ANSI clase 150.*
■ Indicates "L" Group pump (dimensions valid for packed box or mechanical seal)., ■ *Indica una bomba Grupo "L" (dimensiones válidas para caja empacada o sella mecánico).*

Motor Dimensions and Weights (may vary with manufacturer)*, ***Peso y dimensiones del motor*** *(pueden variar de acuerdo al fabricante) **

Motor Frame *Bastidor del motor*	A	AB Max.	B	D	E	F	G	H	P Max.	Horsepower 3500 RPM 1 Phase ODP	1 Phase TEFC	3 Phase ODP	3 Phase TEFC	1750 RPM 1 Phase ODP	1 Phase TEFC	3 Phase ODP	3 Phase TEFC	Wt. Max.
213JP	9½	7⅜	8	5¼	4¼	2¾	¼	13/32	9⅝	7½	—	10	—	5	—	7½	7½	125
215JP						3½				10	—	15	10 & 15	7½ & 10	—	10	10	155
254JP	11¼	9	11¾	6¼	5	5	¼	17/32	11½	—	—	20	—	—	—	15	15	255
256JP										—	—	25	20	—	—	20	20	280
284JP	12¼	12¼	12¼	7	5½	5½			13¼	—	—	30	25	—	—	25	25	410
286JP										—	—	40	30	—	—	30	30	425
324JP	13¼	13¼	13½	8	6¼	6	5/16	21/32	15⅛	—	—	50	40	—	—	40	40	560
326JP										—	—	60	50	—	—	50	50	590
364TCZ	17½	14⅜	15⅛	9	7	5⅝	1		18⅜	—	—	75	60 & 75	—	—	60	60	775
365TCZ						6⅛				—	—	—	—	—	—	75	75	1005
404TCZ	19½	17½	16⅝	10	8	6⅛	1	13/16	20⅛	—	—	—	—	—	—	100	100	1110
405TCZ						6⅞				—	—	—	—	—	—	125	—	1163
444TCZ	21½	19⅛	19½	11	9	7¼	1		22½	—	—	—	—	—	—	150	125	1600
445TCZ						8¼				—	—	—	—	—	—	—	150	1708

NOTE:
1. All pumps shipped in vertical discharge position. For other orientations, remove casing bolts, rotate to desired position, and tighten ⅜- 16 casing bolts to 37 ft./lbs. torque., ½- 13 casing bolts to 90 ft./lbs. torque.
2. Dimensions in inches, weight in pounds.
3. Not to be used for construction purposes.

NOTA:
1. Todas las bombas se embarcan con la descarga en posición vertical. Para otras orientaciones, retire los pernos de la carcasa, haga rotar la descarga hasta la posición deseada y ajuste los 16 pernos de ⅜ de pulgada a una torsión de 37 pies/libra, y los 13 pernos de ½ pulgada a 90 pies/libra.
2. Dimensiones en pulgadas, peso en libras.
3. No utilizar con fines de construcción.

Specifications

Capacities to:
1600 GPM (363 m³/hr) at 3500 RPM
1400 GPM (318 m³/hr) at 1750 RPM

Heads to:
400 feet TDH (121 m) at 3500 RPM
185 feet TDH (56 m) at 1750 RPM

Working pressure to:
200 PSIG (14 bars)

Suction pressure to:
100 PSIG (7 bars)

Maximum temperature to:
212°F (100°C) with standard seal or 250°F (121°C) with optional seal.

Motor:
NEMA standard JM frame for 3656 or T-frame for 3756 mechanical seal, JP or T-frame for packed box. Open drip proof, totally enclosed fan cooled and explosion proof enclosures available. Single phase (115/230 V), 2-5 HP and three phase (208 – 230/460 V) 2 – 150 HP are available at 1750 or 3500 RPM.

Direction of Rotation:
Clockwise viewed from motor end.

Especificaciones

Capacidad hasta:
1600 GPM (363 m³/hr) a 3500 RPM
1400 GPM (318 m³/hr) a 1750 RPM

Cargas hasta:
400 pies (121 m) carga dinámica total a 3500 RPM
185 pies (56 m) carga dinámica total a 1750 RPM

Presión de operación hasta:
200 PSIG (14 bars)

Presión de succión hasta:
100 PSIG (7 bars)

Temperatura máxima:
212°F (100°C) con sello estándar o 250°F (121°C) con sello optativo.

Motor:
NEMA JM estándar en el modelo 3656 y bastidor NEMA T estándar en el modelo 3756 con sello mecánico, bastidor JP o T para caja prensaestopas. Las cubiertas disponibles son: abierta a prueba de filtración, totalmente encerrada con enfriamiento por ventilador y a prueba de explosiones. Motores monofásicos (115/230 V), 2-5 HP y trifásicos (208 – 230/460 V) 2 – 150 HP disponibles a 1750 ó 3500RPM.

Dirección de rotación:
Dextrorsa (sentido de las agujas del reloj) cuando se mira desde el extremo del motor.

Typical Applications

- Booster service
- Spraying systems
- Irrigation
- Water circulation
- Liquid transfer
- General purpose pumping

Aplicaciones típicas

- *Servicio de refuerzo*
- *Sistemas de rociado*
- *Sistemas de riego*
- *Circulación de agua*
- *Transferencia de líquidos*
- *Aplicaciones de bombeo en general*

© 1999 Goulds Pumps (March, 1999)
Printed in USA
36/3756M

Printed on recycled paper.

Goulds Pumps
1 Goulds Drive
Auburn, NY 13021

Goulds Pumps
ITT Industries

GOULDS PUMPS

3656/ 3756 S-Group

Cast Iron Bronze Fitted Centrifugal Pumps

Bombas centrífugas en hierro fundido con accesorios de bronce

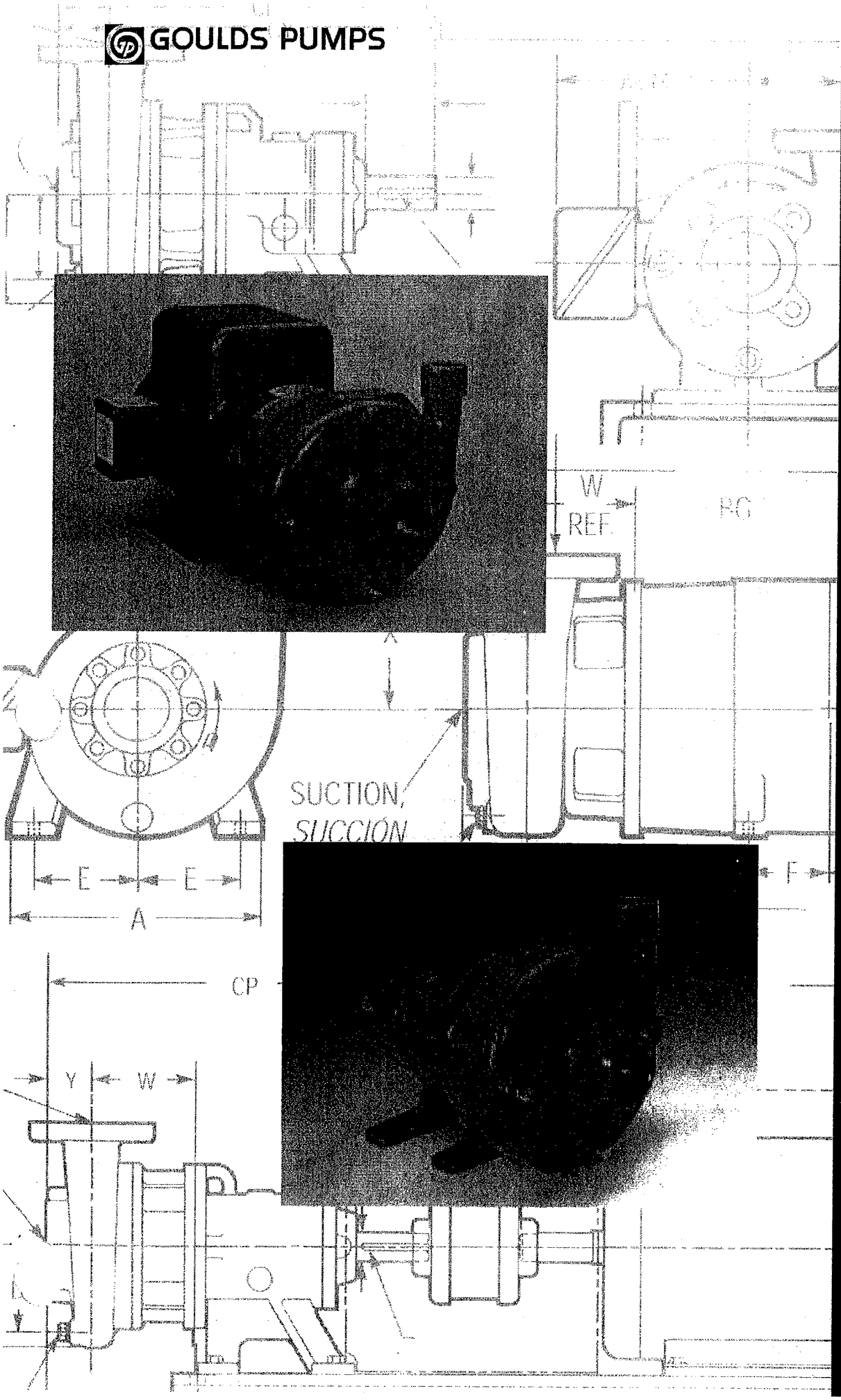

Goulds Pumps

ITT Industries

A Full Range of Product Features

The 3656 and 3756 S-Group pumps from Goulds have been designed with technical benefits to meet the needs of users in a variety of water supply, recirculation, and cooling applications.

- The model 3656 offers close coupled design for space saving and simplified maintenance.
- The model 3756 offers a bearing frame mounted design for flexibility of installation and drive arrangements.
- Back pull-out to reduce maintenance down time.
- Standard Type 21 mechanical seal for both reliability and availability. Carbon/ceramic/ BUNA standard, with other faces and elastomers available.
- 3656/3756 available in all iron, bronze fitted or all bronze construction for application versatility.
- Replaceable wearing components include stainless steel shaft sleeve and casing and hub wear rings to maintain peak efficiency.
- Packed box sealing is also available as an option.
- Enclosed impeller design, dynamic balancing and renewable wear rings reduce losses affecting performance and pump life.
- Suction and discharge pipe connections are NPT threaded, except 3 x 4 – 7 which has 125 lb. ANSI flat faced flanges.
- Rigid cast iron motor adapter provides support and registered fits maintain positive unit alignment.
- Standard NEMA motor frame, JM or JP shaft extension, C-face mounting, single phase or three phase, 3500 or 1750 RPM. Open drip proof and totally enclosed fan cooled.
- Optional explosion proof or high efficiency motors available.
- Optional rigid carbon steel bedplate, sheet metal coupling guard and T. B. Woods spacer coupling for 3756 models.

Una amplia gama de variadas características

Las bombas 3656 y 3756 del Grupo S de Goulds han sido diseñadas con beneficios técnicos para satisfacer las necesidades de los usuarios en variadas aplicaciones de suministro y recirculación de agua y aplicaciones de refrigeración.

- *El modelo 3656 cuenta con diseño de acoplamiento corto para ahorrar espacio y simplificar el mantenimiento.*
- *El modelo 3756 cuenta con diseño de montaje sobre bastidor que ofrece gran flexibilidad en los arreglos de instalación y accionamiento.*
- *Desmontaje posterior que reduce el tiempo de inactividad por mantenimiento.*
- *Sello mecánico estándar Tipo 21, brinda gran confiabilidad y asegura la disponibilidad. Estándar de carbono/cerámica/ BUNA, también se encuentran disponibles con otras caras y elastómeros.*
- *Los modelos 3656 y 3756 se fabrican en todo hierro, con accesorios de bronce o en todo bronce, para una mayor versatilidad de aplicación.*
- *Los componentes de desgaste reemplazables incluyen los anillos de desgaste de la carcasa y del rodete y la camisa del eje, de acero inoxidable, para mantener la eficiencia pico.*
- *El diseño de impulsor encerrado, balanceo dinámico y anillos de desgaste reemplazables reducen las pérdidas que afectan el desempeño y la vida de la bomba.*
- *Las conexiones de succión y descarga son roscadas NPT, con excepción de la bomba de 3 x 4 – 7, que cuenta con bridas de cara lisa ANSI de 125 lbs.*
- *El adaptador rígido del motor, de hierro fundido, ofrece soporte y los montajes registrados mantienen el alineamiento positivo de la unidad.*
- *Motor con bastidor NEMA estándar, extensión de eje JM, montaje en cara C, monofásico o trifásico, 3500 ó 1750 RPM. Abierto a prueba de filtraciones o totalmente encerrado enfriado por ventilador.*
- *Motores a prueba de explosiones y de alta eficiencia disponibles como opción.*
- *Placa de asiento rígida de acero al carbono, protector de acoplamiento de chapa metálica y acoplamiento espaciador T. B. Woods disponibles como opción en los modelos 3756.*

Goulds Pumps is ISO 9001 Registered.

3500 Coverage Curve, *Curva de alcance 3500*

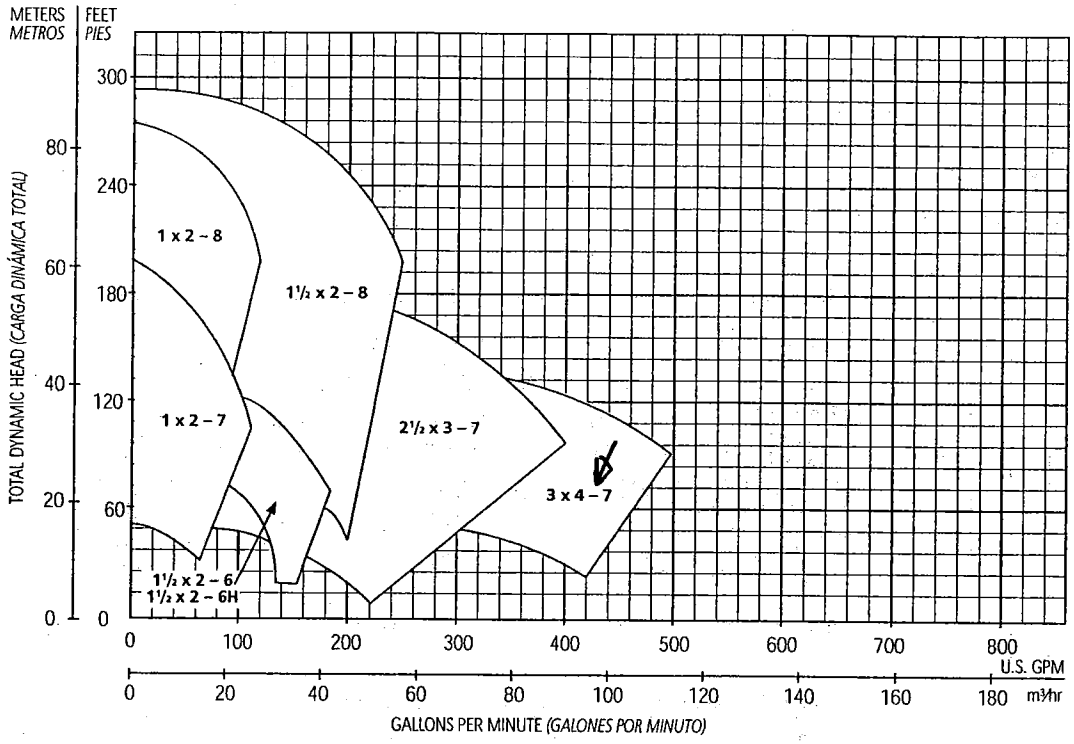

1750 Coverage Curve, *Curva de alcance 1750*

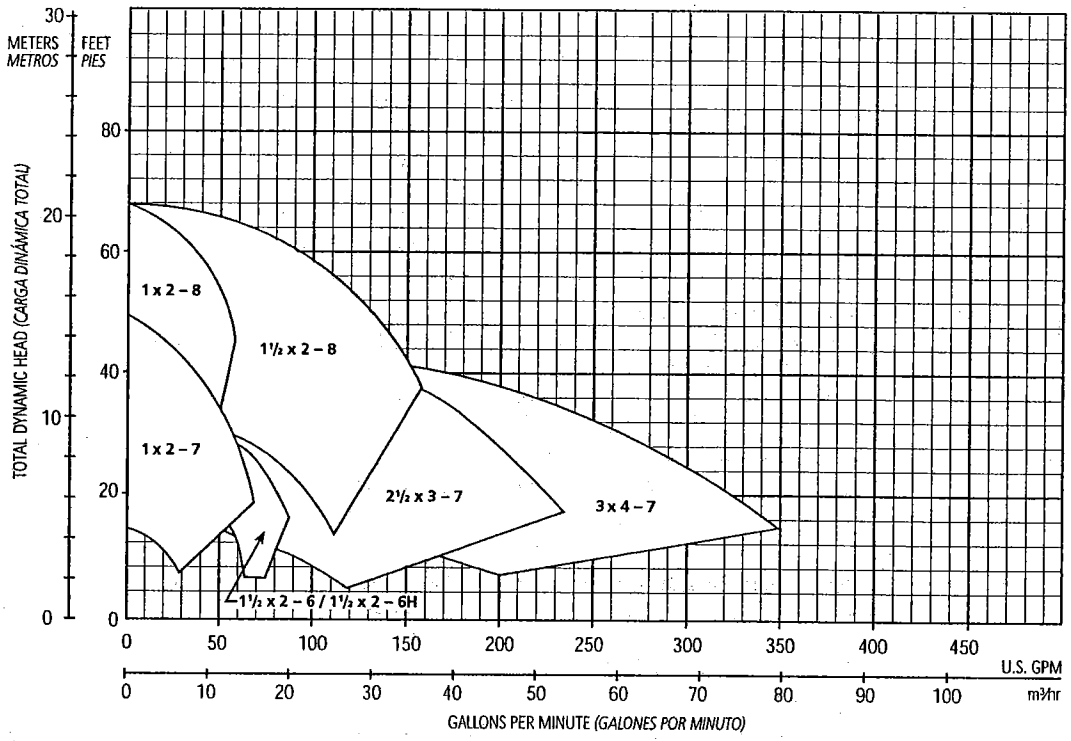

3656/3756 S-Group Numbering System For All Units Built After June 1, 1998

Sistema de numeración del Grupo S, modelos 3656/3756, para todas las unidades fabricadas luego del 1° de junio de 1998

The various versions of the 3656 and 3756 S-Group are identified by a product code number on the pump label. This number is also the catalog number for the pump. The meaning of each digit in the product code number is shown below.

Not all combinations of motor, impeller and seal options are available for every pump model. Please check with Goulds on non-cataloged numbers.

Not recommended for operation beyond printed H-Q curve. For critical application conditions consult factory.

Las diferentes versiones de los modelos 3656 y 3756 del Grupo S se identifican con un número de código de producto en la etiqueta de la bomba. Este número es también el número de catálogo de la bomba. A continuación se ilustra el significado de cada dígito en el código del producto.

No todas las combinaciones de motor, impulsor y sellos están disponibles para cada modelo. Consulte a Goulds sobre números que no aparecen en el catálogo.

No se recomienda la operación más allá de la curva impresa de H-Q (carga-capacidad). Para aplicaciones bajo condiciones críticas, consulte con la fábrica.

Example Product Code, *Ejemplo del código de producto*

9 BF 1 H 2 G 0 H

High Head Impeller (1½ x 2 – 6H Only), *Impulsor de carga alta (1½ x 2 – 6H únicamente)*

Mechanical Seal and O-ring, *Sello mecánico y anillo en O*

Type 21 Mechanical Seal, *Tipo 21 sello mecánico*					
Seal Code, *Código del Sello*	**Rotary, *Rotativo***	**Stationary, *Estacionario***	**Elastomers, *Elastómeros***	**Metal Parts, *Partes Metálicas***	**Part No., *Pieza Número***
0	Carbon, *Carbón*	Ceramic, *Cerámica*	BUNA-N	316 SS, *316 Acero inoxidable*	10K13
1		Sil-Carbide, *Carburo de silicona*	EPR		10K19
3			Viton		10K27
5	Sil-Carbide				10K64
9	Packed Box Design with BUNA O-Ring, *Diseño de prensaestopas empacado con anillo en O de BUNA*				15K16

Note: 10K27 replaces obsolete 10K25, ***Nota:** La 10K27 reemplace la obsoleta 10K25.*

Impeller Option Code, *Código de opción de impulsor*

Impeller Code, *Código del impulsor*	22BF	9BF	3BF		5BF	4BF	6BF
	1 x 2 – 7	1 x 2 – 8	1½ x 2 – 6	1½ x 2 – 6H	1½ x 2 – 8	2½ x 3 – 7	3 x 4 – 7
	Dia.	Dia.	Dia.	Dia.	Dia.	Dia.	Dia.
A	6¾"	8 1/16"	5 15/16"	5 15/16"	8 1/16"	7 1/16"	7 1/16"
B	6 7/16	7⅝	5⅝	5⅝	7⅝	6¾	6⅜
C	6	7 5/16	5⅛		6¾	6⅜	5½
D	5¾	7	4¾		5¾	5⅞	4 11/16
E	5½	6½			7¾	5⅝	5⅛
F	5 1/16	6 3/16			7	5 7/16	6
G	4 13/16	5⅜			6¼	5¼	
H	4 9/16	5⅛			6⅛	4 15/16	
J	4⅜					4¾	
K	4 1/16					4⅛	
L	3 13/16						

Driver, *Elemento motor*

1 = 1 PH, *fase*, ODP
2 = 3 PH, *fases*, ODP
3 = 575 V, ODP
4 = 1PH, *fase*, TEFC
5 = 3 PH, TEFC
6 = 575 V, TEFC
7 = 3 PH, *fases*, XP
8 = 575 V, XP
9 = 3 PH, *fases*, TEFC, PREFF
0 = 1 PH, *fase*, XP

1 PH, fase = Monofásiico; 3 PH, fases = Trifásico

HP Rating, *Potencia nominal, HP*

C = ½ HP
D = ¾ HP
E = 1 HP
F = 1½ HP
G = 2 HP
H = 3 HP
J = 5 HP
K = 7½ HP
L = 10 HP
M = 15 HP
N = 20 HP

Driver: Hertz/Pole/RPM, *Elemento motor: Hertz/Polos/RPM*

1 = 60 Hz, 2 pole, 3500 RPM
2 = 60 Hz, 4 pole, 1750 RPM
3 = 60 Hz, 6 pole, 1150 RPM
4 = 50 Hz, 2 pole, 2900 RPM
5 = 50 Hz, 4 pole, 1450 RPM

For frame mounted version, substitute the letters "FRM" in these positions.

Para las versiones de montaje en bastidor, reemplazar las letras en esta ubicación con "FRM".

Material, *Material*

BF = Bronze fitted, *Accesorios de bronce*
AI = All iron, *Todo hierro*
AB = All bronze, *Todo bronce*

Pump Size, *Tamaño de bomba*

3 = 1½ x 2 – 6(H)
4 = 2½ x 3 – 7
5 = 1½ x 2 – 8
6 = 3 x 4 – 7
9 = 1 x 2 – 8
22 = 1 x 2 – 7

The 1 x 2 – 8 and 1 x 2 – 7 are only available in Bronze Fitted.
Los tamaños 1 x 2 – 8 y 1 x 2 – 7 están disponibles con accesorios de bronce únicamente.

Performance Curves – 60 Hz, 3500 RPM
Curvas de desempeño – 60 Hz, 3500 RPM

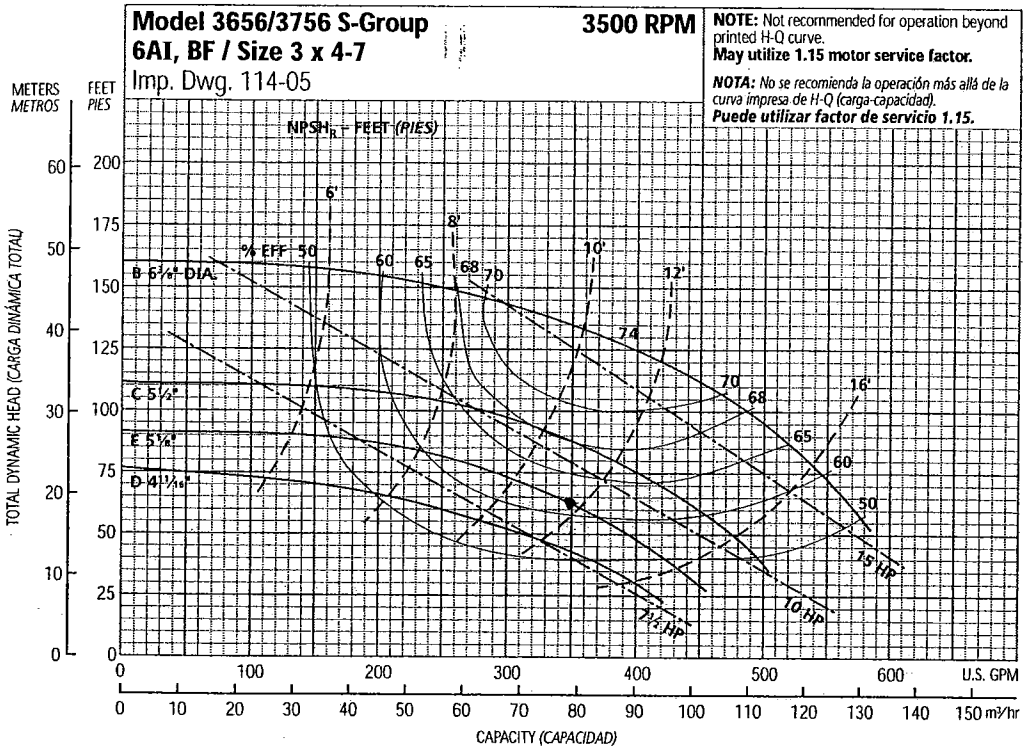

Optional Impeller *Impulsor optativo*	
Ordering Code ***Código de pedido***	**Dia.** ***Diá.***
B	6⅜"
C	5½
D	4¹¹⁄₁₆
E	5⅛
F	6

NOTE: Pump will pass a sphere to ½" diameter.

NOTA: *La bomba dejará pasar una esfera de hasta ½ de pulgada de diámetro.*

Performance Curves – 60 Hz, 1750 RPM
Curvas de desempeño – 60 Hz, 1750 RPM

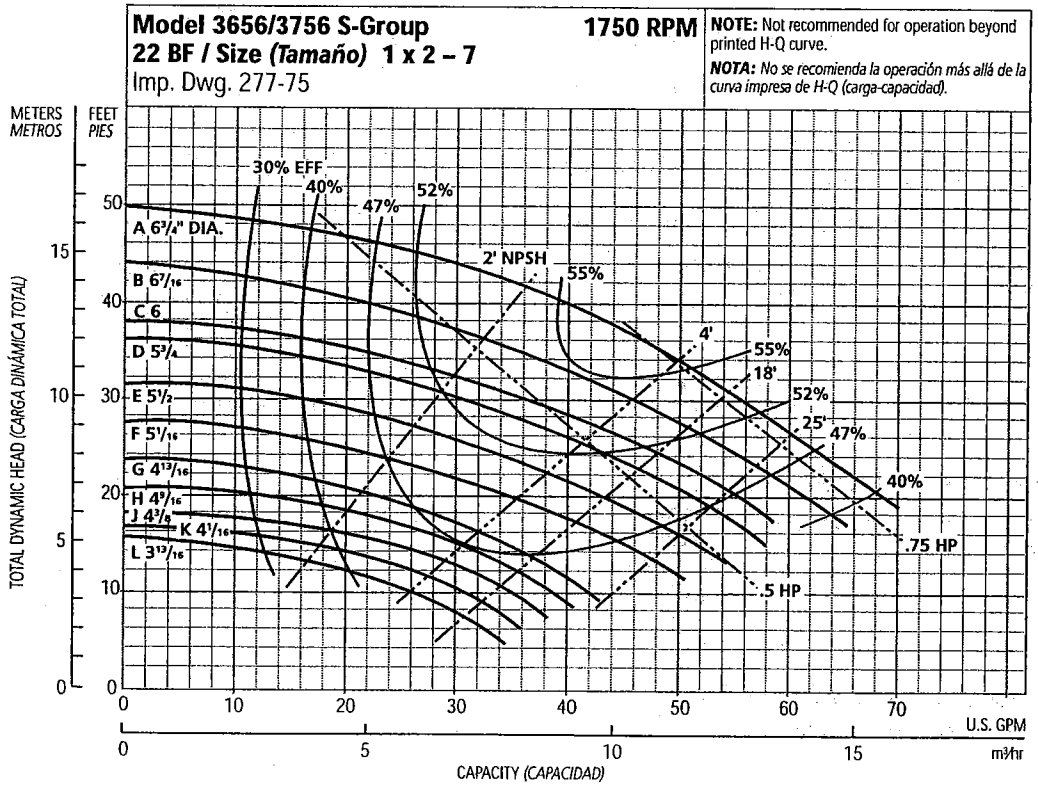

Optional Impeller *Impulsor optativo*	
Ordering Code ***Código de pedido***	**Dia.** ***Diá.***
A	6¾"
B	6⁷⁄₁₆
C	6
D	5¾
E	5½
F	5¹⁄₁₆
G	4¹³⁄₁₆
H	4⁹⁄₁₆
J	4⅜
K	4¹⁄₁₆
L	3¹³⁄₁₆

NOTE: Pump will pass a sphere to ³⁄₁₆" diameter.

NOTA: *La bomba dejará pasar una esfera de hasta ³⁄₁₆ de pulgada de diámetro.*

3656 S-Group Materials of Construction
Materiales de construcción - Grupo S, modelo 3756

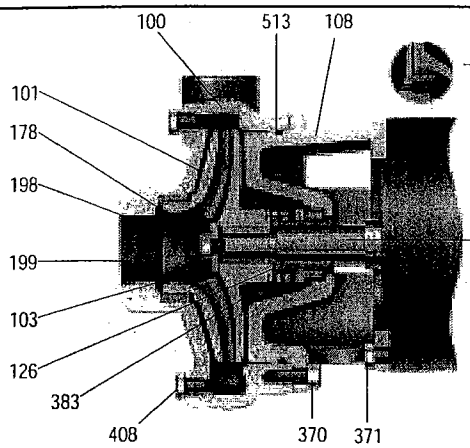

Back wearing ring on S-Group (2½ x 3 – 7) only
Anillo de desgaste posterior en el Grupo S (2½ x 3 – 7) únicamente.

AISI 1045 steel motor shaft extension (typical)
Extensión del eje del motor de acero AISI 1045 (típico)

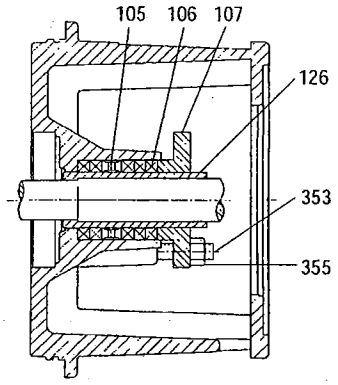

Packed Box Arrangement
Caja prensaestopas

Item No. *No. Ítem*	Description *Descripción*	Materials, *Materiales* All Iron *Todo hierro*	Bronze Fitted *Accesorios de bronce*	All Bronze *Todo bronce*
100	Casing, *Carcasa*	1001	1001	1101
101	Impeller, *Impulsor*		1101	
103	Casing wear ring, *Anillo de desgaste de la carcasa*		1618	1618
108	Adapter, *Adaptador*		1001	1001
184	Seal housing, *Cubierta del sello* ①	One piece with adapter, *Una pieza con adaptador*		1101
126	Shaft sleeve, *Camisa del eje*	AISI Type 300 series stainless steel *Acero inoxidable serie AISI tipo 300*		
178	Impeller key, *Chaveta del impulsor*			
198	Impeller bolt, *Perno del impulsor*			
199	Impeller washer, *Arandela del impulsor*			
370	Hex head cap screw (adapter to case), *Tornillo de cabeza hexagonal (del adaptador a la cubierta)*	Steel SAE 1200 Grade 5 *Acero SAE 1200 grado 5*		
371	Hex head cap screw (adapter to motor), *Tornillo de cabeza hexagonal (del adaptador al motor)*			
383	Mechanical seal, *Sello mecánico*	See seal chart, *Ver tabla del sello*		
408	Pipe plug ¼" or ⅜", *Tapón de tubos de ¼ de pulgada ó ⅜ de pulgada*	Steel, *Acero*		Bronze, *Bronce*
513	O-ring, *Anillo en O*	BUNA-N, *BUNA-N*		

Material Code, *Código de material*	Engineering Standard, *Norma de ingeniería*
1101	Cast iron ASTM A48 CL20, *Hierro fundido ASTM A48 CL20*
1101	Silicon bronze ASTM B584, C87500, *Siliciuro de bronce ASTM B584, C87500*
1618	Bizmuth brass, *Latón al bismuto*

Packed Box Arrangement, *Caja prensaestopas*

Item No., *No. Ítem*	Description, *Descripción*	Materials, *Materiales*
105	Lantern ring, *Aro de linterna*	Teflon™
106	Packing, 5 rings; *Empaquetadura, 5 aros*	Teflon Impregnated, *Impregnado de Teflon*
107	Gland, *Casquillo*	AISI 316SS
126	Shaft sleeve, *Camisa del eje*	AISI Type 300 Series Stainless Steel *Acero inoxidable serie AISI tipo 300*
353	Gland stud, *Perno del casquillo*	
355	Gland nut, *Tuerca del casquillo*	

① For separate seal housing and adapter construction, all bronze material only, see repair parts page.
Para la construcción separada del compartimiento del sello y el adaptador, materiales de bronce únicamente, consulte la página de piezas de repuesto.

NOTE:
Pumps will be shipped with top-vertical discharge position as standard. For other orientations, remove casing bolts – rotate discharge to desired position – replace and tighten bolts to 25 ft./lbs. Note that discharge may extend below motor mounting surface in bottom-horizontal position; adequate clearance must be provided.

NOTA:
Las bombas salen de la fábrica con la descarga orientada en posición vertical superior de manera estándar. Para modificar la orientación, retirar los pernos de la carcasa, hacer girar la descarga hasta la posición deseada y volver a colocar los pernos, ajustándolos a una torsión de 25 pies/libras. Se ha de notar que la descarga se puede extender por debajo de la superficie de montaje del motor en la posición horizontal inferior; por lo tanto, debe proveerse suficiente espacio.

Type 21 Mechanical Seal, *Tipo 21 sello mecánico*

Seal Code, *Código del Sello*	Rotary, *Rotativo*	Stationary, *Estacionario*	Elastomers, *Elastómeros*	Metal Parts, *Partes Metálicas*	Part No., *Pieza Número*
0	Carbon, *Carbón*	Ceramic, *Cerámica*	BUNA-N	316 SS, *316 Acero inoxidable*	10K13
1		Sil-Carbide, *Carburo de silicona*	EPR		10K19
3			Viton		10K27
5	Sil-Carbide				10K64
9	Packed Box Design with BUNA O-Ring, *Diseño de prensaestopas empacado con anillo en O de BUNA*				15K16

Note: 10K27 replaces obsolete 10K25, ***Nota:** La 10K27 reemplace la obsoleta 10K25.*

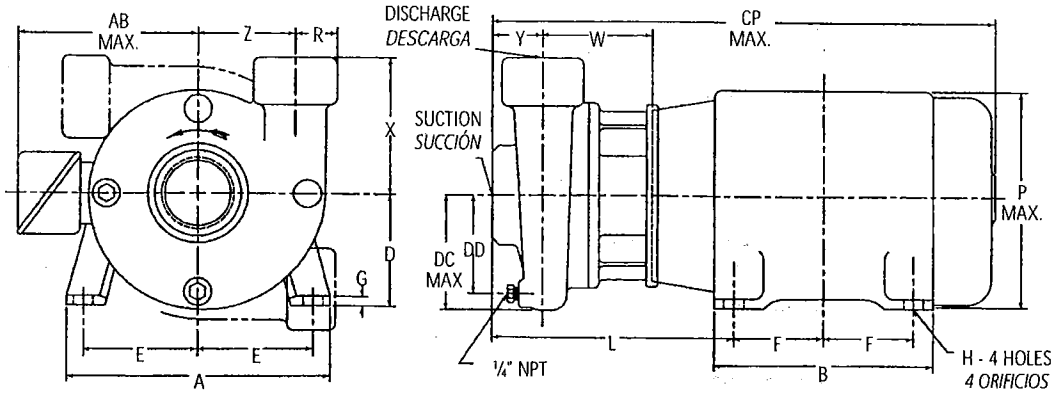

Pump Dimensions and Weights (Dimension "L" determined by Pump and Motor)
Peso y dimensiones de la bomba *(la dimensión "L" está determinada por la bomba y el motor)*

Pump Bomba	Suction Succión	Discharge Descarga	CP Max.	DC Max.	DD	R	W	X	Y	Z	Wt. (lbs.) Pesos (libras)	Motor Frame Size, Bastidor 140	180	210	250
												L			
1 x 2 – 7	2	1	30	4¼	3½	1 1/16	7 3/16	5½	3	4	52	13 1/16	13 13/16	—	—
1 x 2 – 8					4		7	5¾	3 3/16	4¼	52			—	—
1½ x 2 – 6		1½	26¾		3½	1¼	7 5/16	4½	2⅝	3½	34	12 13/16	13 9/16	—	—
1½ x 2 – 8			30⅛	5⅜	4⅝			5		4¼	54			14 7/16	11⅝
2½ x 3 – 7	3	2½	28⅝	5⅛	4½	1 13/16		6	3	4	49	13 3/16	13 13/16	14 13/16	—
3 x 4 – 7	4*	3*	28¼	5¾	5⅛	3¾	7 7/16		2½	4½	82	12 13/16	13 7/16	14 7/16	—

Motor Dimensions and Weights (may vary with manufacturer)*
Peso y dimensiones del motor *(pueden variar de acuerdo al fabricante)* *

Frame Size JP *Tamaño del bastidor JP*	A	AB (Max.)	B	D	E	F	G	H	P (Max.)	Weight (lbs.) *Pesos (libras)*
143	6½	5¼	6	3½	2¾	2	⅛	11/32	6⅝	41
145						2½				57
182	8½	5⅞	6½	4½	3¾	2¼	3/16	13/32	7⅞	77
184						2¾				88
213 TCZ	9½	7⅜	8	5¼	4¼	2¾	7/32	13/32	9⅝	122
215 TCZ						3½				155
213 TCZ	11¼	9	9½	6¼	5	2¾	¼	17/32	11½	265
215 TCZ			11¾			3½				320

TCZ indicates west coast fit.

NOTE:
All pumps shipped in vertical discharge position. May be rotated in 90° increments. Tighten casing bolts to 25 ft./lbs. torque.

NOTA:
Todas las bombas se embarcan con la descarga en posición vertical. Esta posición puede rotarse en incrementos de 90°. Ajustar los pernos de la carcasa a una torsión de 25 pies/libras.

Motor Frames and Horsepower
Bastidores del motor y potencia en HP

Motor Frame *Bastidor del motor*	3500 RPM 1 Phase ODP	3500 RPM 1 Phase TEFC	3500 RPM 3 Phase ODP	3500 RPM 3 Phase TEFC	1750 RPM 1 Phase ODP	1750 RPM 1 Phase TEFC	1750 RPM 3 Phase ODP	1750 RPM 3 Phase TEFC
143 JP	—	—	—	—	—	—	1	—
145 JP	—	—	3	2,3	—	—	1½,2	1½,2
182 JP	3	—	5	—	3	—	3	3
184 JP	5	—	7½	5	—	—	5	5
213 TCZ	7½	—	10	7½	5	—	—	—
215 TCZ	10	—	15	10,15	—	—	—	—
254 TCZ	—	—	20	—	—	—	—	—
256 TCZ	—	—	25	—	—	—	—	—

All dimensions in inches and weights in lbs. Do not use for construction purposes.
Todas las dimensiones están en pulgadas, el peso en libras. No utilizar para fines de construcción.
TCZ indicates west coast fit.

Specifications

Capacities to:
550 GPM (125 m³/hr) at 3500 RPM
350 GPM (79 m³/hr) at 1750 RPM

Heads to:
280 feet TDH (85 m) at 3500 RPM
67 feet TDH (20 m) at 1750 RPM

Working pressure to:
175 PSIG (12 bars)

Suction pressure to:
100 PSIG (7 bars)

Maximum temperature to:
212°F (100°C) with standard seal or 250°F (121°C) with optional seal.

Motor:
NEMA standard JM frame or JP frame for 3656 or T-frame for 3756. Open drip-proof, totally enclosed fan cooled and explosion proof enclosures available. Single phase (115/208 – 230 V), ½ to 3 HP (208 – 230 V) 5 HP and (230V only) on 7½, 10 HP. Three phase (208 – 230/460 V) standard note that 20 and 25 HP are (230/460 V).

Direction of Rotation:
Clockwise viewed from motor end.

Especificaciones

Capacidad hasta:
550 GPM (125 m³/hr) a 3500 RPM
350 GPM (79 m³/hr) a 1750 RPM

Cargas hasta:
280 pies (85 m) carga dinámica total a 3500 RPM
67 pies (20 m) carga dinámica total a 1750 RPM

Presión de operación hasta:
175 PSIG (12 bars)

Presión de succión hasta:
100 PSIG (7 bars)

Temperatura máxima:
212 °F (100 °C) con sello estándar o 250 °F (121 °C) con sello optativo.

Motor:
Bastidor NEMA JM estándar en el modelo 3656 y bastidor NEMA T estándar en el modelo 3756. Las cubiertas disponibles son: abierta a prueba de filtración, totalmente encerrada con enfriamiento por ventilador y a prueba de explosiones. Monofásico (115/208 – 230 V), ½ a 3 HP; (208 – 230 V) 5 HP y (230 V solamente) 7½ a 10 HP. Trifásico (208 – 230/460 V) estándar. Los motores de 20 a 25 HP son de 230/460 V.

Dirección de rotación:
Dextrorsa (sentido de las agujas del reloj) cuando se mira desde el extremo del motor.

Typical Applications

- Booster service
- Spraying systems
- Irrigation
- Water circulation
- Liquid transfer
- General purpose pumping

Aplicaciones típicas

- *Servicio de refuerzo*
- *Sistemas de rociado*
- *Sistemas de riego*
- *Circulación de agua*
- *Transferencia de líquidos*
- *Aplicaciones de bombeo en general*

© 2002 Goulds Pumps (January, 2002)
Printed in USA
36/3756S

Printed on recycled paper.

Goulds Pumps
1 Goulds Drive
Auburn, NY 13021

Goulds Pumps
ITT Industries

1720E Low Range Turbidimeter

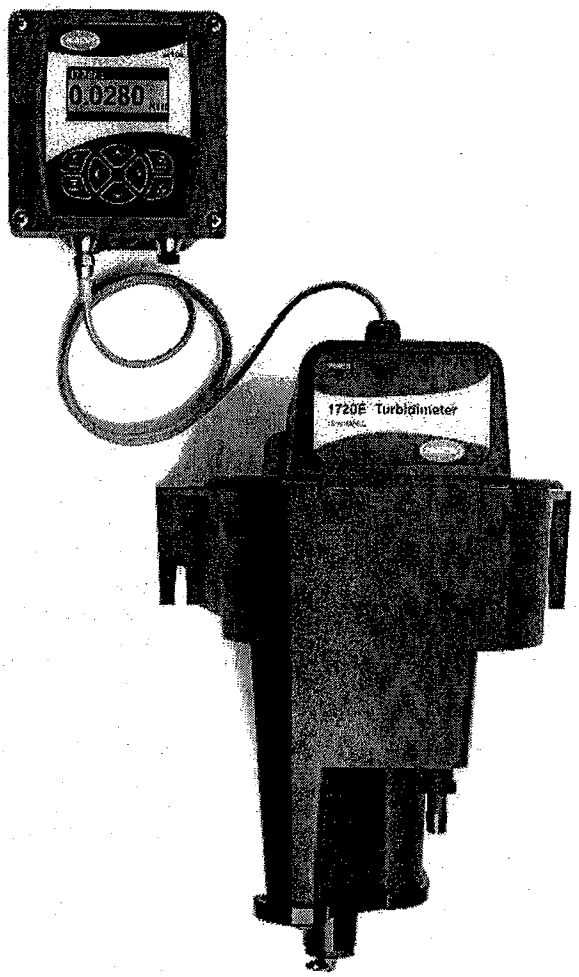

The Model 1720E Low Range Turbidimeter is the newest is a long line of successful Hach turbidimeters—from the unsurpassed world leader in turbidity measurement.

Features and Benefits

USEPA Reporting

The 1720E Low Range Turbidimeter applies the instrument design and meets performance criteria established by the U.S. Environmental Protection Agency (USEPA) in Method 180.1, making it suitable for regulatory reporting.

Accuracy

Continuously flowing sample flows through the patented* bubble removal system, which vents entrained air from the sample stream and eliminates the most significant interference in low level turbidity measurement. The 1720E Turbidimeter is not affected by variations in flow and pressure.

Nephelometric Measurement

Incandescent light directed from the sensor head assembly down into the turbidimeter body is scattered by suspended particles in the sample. The sensor's submerged photocell detects light scattered at 90° from the incident beam. Sample enters the center column of the turbidimeter, rises into the measuring chamber and spills over the weir into the drain port. This configuration results in an optical flat surface free of turbulence.

Simplicity

A simplified two-module design includes the sensor and the controller interface. The controller accepts two turbidity sensors—adding a second 1720E sensor makes a system with two complete turbidimeters. Connections are simple plug & play.

Data Collection and Display

The 1720E Turbidimeter uses the sc100 Controller to receive data from up to two sensors. A built-in data logger collects turbidity measurement at user selectable intervals (1-15 minutes), along with calibration and verification points, alarm history, and instrument setup changes for 6 months. Communications using MODBUS®/RS485, MODBUS®/RS232, LonWorks® protocols or the wireless IR port are available. The sc100 Controller is also compatible with AquaTrend® Networks. Local display, recall, graphing, and trending in CSV format make chart recorders redundant.

Experience

The 1720E Turbidimeter reflects 45 years of Hach leadership in turbidity measurement science. Hach has the largest turbidimeter installation base in the world. And, Hach offers a two-year warranty on the 1720E.

*U.S. patent 5,831,727

Fast Calibration and Verification

Calibration and verification can be performed without loss of sample flow using the ICE-PIC™ Calibration/Verification Module. One-point calibration with prepared StablCal™ Stabilized Formazin Solution eliminates the errors of user-prepared formazin suspension dilution. Features of the ICE-PIC Module include:

- *Calibrate or verify the performance of each sensor in less than one minute*
- *Factory calibrated and provided with a certificate of accuracy.*
- *Cost effective, one-time investment. No consumables are needed.*
- *Small, lightweight design can be used for spot verification in the facility.*
- *Available in 20 and 1.0 NTU.*

DW
PW
IW

DW = drinking water *WW = wastewater municipal* ***PW = pure water / power***
IW = industrial water ***E = environmental*** *C = collections* ***FB = food and beverage***

HACH®

Be Right™

Specifications*

Range
0.001-100 Nephelometric Turbidity Units (NTU)

Accuracy
(Defined according to ISO 15839.)
±2% of reading or ±0.015 NTU (whichever is greater) from 0 to 40 NTU; ±5% of reading from 40 to 100 NTU

Displayed Resolution
0.0001 NTU up to 9.9999 NTU; 0.001 NTU from 10.000 to 99.999 NTU

Repeatability
(Defined according to ISO 15839.)
Better than ±1.0% of reading or ±0.002 NTU, whichever is greater

Response Time
Initial response in 1 minute, 15 seconds for a full-scale step change

Signal Average Time
User selectable from 6, 30, 60, 90 seconds; default 30 seconds

Sample Temperature
0 to 50°C (32 to 122°F)

Sample Flow Required
200 to 750 mL/minute (3.1 to 11.9 gal/hour)

Operating Temperature
Single sensor system:
0 to 50°C (32 to 122°F)
Two sensor system:
0 to 40°C (32 to 104°F)

Operating Humidity
5 to 95% non-condensing

Storage Temperature
-20 to 60°C (-4 to 140°F)

Power Requirements
100-230 Vac, 50/60 Hz, auto selecting; 40 VA

Sample Inlet Fitting
1/4" NPT female, 1/4" compression fitting (provided)

Drain Fitting
1/2" NPT female, 1/2" hose barb (provided)

Recorder Outputs
Two selectable for 0-20 mA or 4-20 mA; output span programmable over any portion of the 0-100 NTU range; built into the sc100 Controller

Alarms
Three set-point alarms, each equipped with an SPDT relay with unpowered contacts rated 5A resistive load at 230 Vac; built into the sc100 Controller

Enclosure
NEMA-4X (indoor)/IP66 Controller

Digital Communication
Network card compatible; MODBUS®/RS485, MODBUS/RS232, LonWorks® protocol (optional)

Wireless Communication
IR Port on the sc100 Controller to download into a handheld Personal Digital Assistant (PDA), or laptop computer via MODBUS®

Compliance
Standard Methods 2130B, USEPA 180.1, Hach Method 8195

Certifications
Safety:
Listed by ETL to UL 61010A-1: Certified by ETL to CSA C22.2 No. 1010.1; CE certified by Hach Company to EN 61010-1

Immunity:
CE certified by Hach Company to EN61326 (industrial levels)

Emissions:
Class A: EN 61326, CISPR 11, FCC Part 15, Canadian Interference-Causing Equipment Regulation ICES-003

Mounting
Turbidimeter body and head assembly: wall and floor stand

sc100 Controller:
wall, pole, panel, and floor stand

Dimensions
Turbidimeter body and cap:
25.4 x 30.5 x 40.6 cm (10 x 12 x 16 in.)

sc100 Controller:
14.4 X 14.4 X 15.0 cm
(5.67 x 5.67 x 5.91 in.)

Shipping Weight
1720E Turbidimeter and sc100 Controller:
6.12 kg (13.5 lbs.)

1720E Turbidimeter:
4.54 kg (10 lbs.)

**Specifications subject to change without notice.*

Engineering Specifications

1. The turbidimeter shall be a microprocessor-based, continuous-reading, on-line nephelometric instrument
2. The turbidity monitoring system shall include one or two turbidimeter(s) and one interface unit.
3. The turbidimeter shall measure turbidity in the range of 0.001-100 NTU
4. Accuracy shall be ±2% of reading or ±0.015 NTU (whichever is greater) from 0 to 40 NTU; ±5% of reading from 40 to 100 NTU
5. Displayed resolution shall be 0.0001 NTU from 0 to 9.999 NTU and 0.001 NTU from 10.000 to 9.999 NTU.
6. Repeatability shall be better than ±1.0% of reading or ±0.002 NTU (whichever is greater).
7. The turbidimeter shall meet all design and performance criteria specified by USEPA method 180.1.
8. Light shall be directed through the surface of the sample and the detector shall be immersed in the sample, eliminating glass windows and flow cells.
9. Optical components shall be mounted in a sealed head assembly that can be removed for calibration/ service without disturbing sample flow.
10. The turbidimeter body shall be constructed of corrosion-resistant polystyrene.
11. An internal bubble removal system shall be included to vent entrained air from the sample stream.
12. Calibration of the turbidimeter shall be either formazin-based (20 or 1 NTU) or instrument comparison-based calibration method.
13. User selectable signal averaging, bubble removal, alarm and recorder output hold, and self-test diagnostics shall be provided.
14. Connections between the turbidimeter(s) and the controller shall be "plug and play."
15. All turbidimeters installed on a network shall have the option for MODBUS/RS232, MODBUS/RS485, LonWorks serial input/output capability for two-way communication to a computer or a have a wireless downloading capability through the IR Port located on the interface unit to download and print realtime turbidity data, calibration history, and current set points in a CSV format.
16. The Interface unit shall allow operators to control sensor and interface functions with menu-driven software and shall provide data logging of measurement data from up to two turbidimeters for 15 minutes, 1 hour, 24 hours, 30 days, or 180 days.
17. The interface unit shall be able to transfer data to a computer or printer via direct MODBUS communications or directly into a Personal Digital Assistant (PDA) via a wireless IR Port.
18. The interface unit shall have a built-in data logger with the capacity to store data on 15-minute intervals for up to 6 months with two sensors per controller.
19. The interface unit shall include two analog outputs and 3 unpowered SPDT alarm contacts.

Engineering Specifications *continued*

20. The interface unit shall be housed in a NEMA-4X (indoor) industrial metal/plastic enclosure.
21. The DC power supply shall be housed in the interface unit
22. The DC power supply shall automatically accept input in the range of 100 to 230 Vac, 50/60 Hz.
23. All system components shall be ETL listed to UL 61010A-1, certified to CSA C22.2 No. 1010.1, and CE certified by manufacturer to EN 61010-1.
24. All system components shall be CE certified by the manufacturer to EN 61326 (industrial levels) for immunity and emissions, Class A.
25. All system components shall meet FCC Part 15 for North America and Canadian Interference-Causing Equipment Regulation ICES-003, and CISPR 11 Class A levels for rest of the world.
26. The turbidimeter shall be Hach Company Model 1720E Low Range Turbidimeter with sc100 Controller.

Dimensions

The sc100 controller unit can be installed on a pole, wall, panel or a floor stand. The 1720E turbidimeter can be installed on a wall or a floor stand. No tools are needed to connect the controller unit to the turbidimeter. The distance between the two units can be a maximum of 9.62 m (31.6 ft) with the use of an extension cable.

sc100 Controller

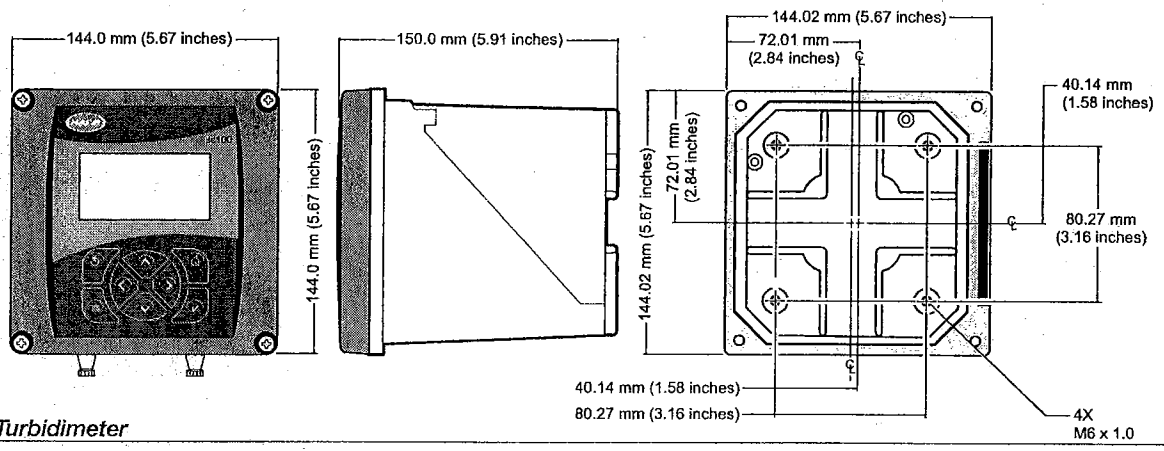

1720E Turbidimeter

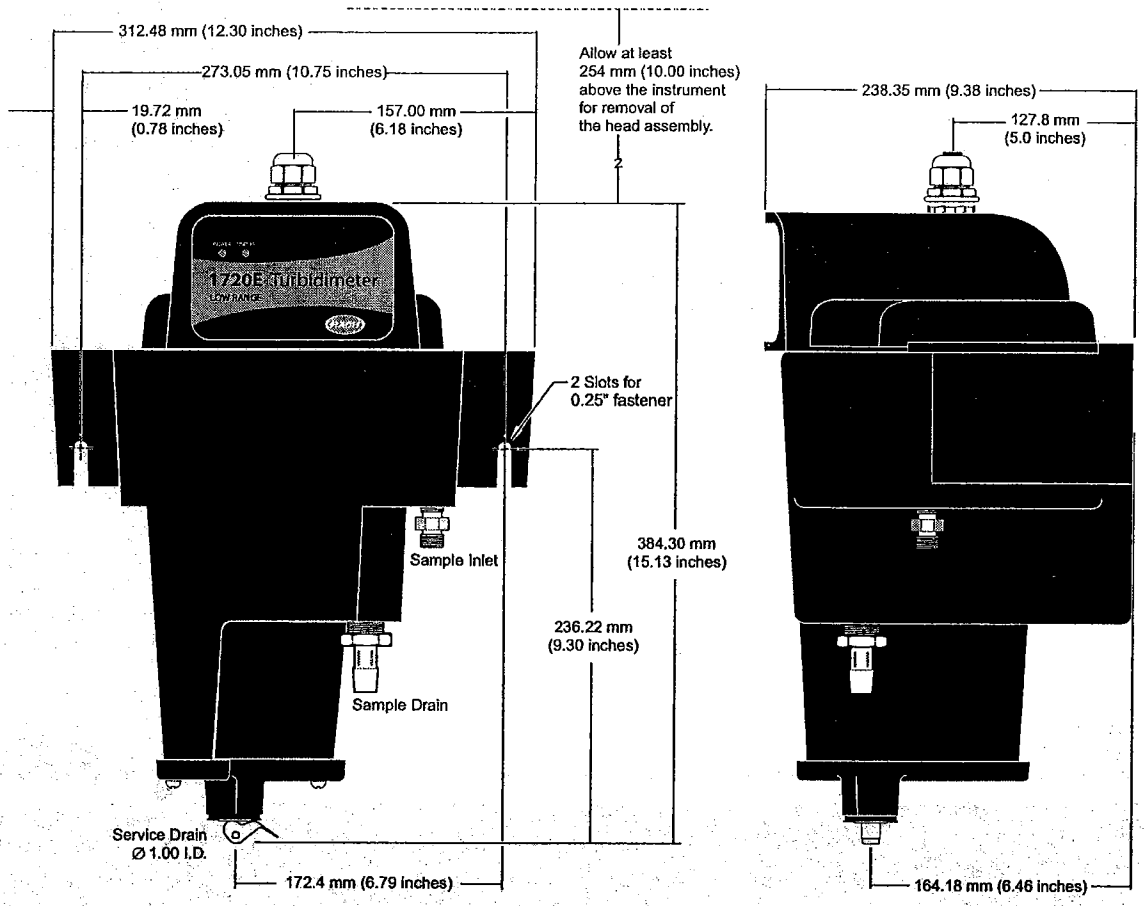

Ordering Information

1720E Turbidimeter

60101-00 1720E Turbidimeter with sc100 Controller

60101-01 1720E Turbidimeter, sensor only

1720E with DigitalDirect Communications

60101-02 1720E/sc100 with MODBUS/RS485 output

60101-03 1720E/sc100 with MODBUS/RS232 output

60101-04 1720E/sc100 with LonWorks output

Cables

57960-00 Extension Cable, 7.7 m (25 ft.)

46306-00 Power Cord w/ strain relief, 125 Vac

46308-00 Power Cord w/ strain relief, 230 Vac, European-style plug

Note: Power cables must be ordered separately.

Accessories

57432-00 Floor Stand

Calibration Supplies

ICE-PIC Calibration/Verification Module / 1720E:

52250-00 20 NTU Module

52215-00 1 NTU Module

StablCal Comparative Calibration Standards

26601-53 20.0 NTU, 1 L each
(Calibration Cylinder, P/N 44153-00, must be ordered separately.)

StablCal Verification Standards

26979-53 0.3 NTU, 1 L each

26980-53 0.5 NTU, 1 L each

27233-53 0.1 NTU, 1 L each

26598-53 1.0 NTU, 1 L each

27463-53 40.0 NTU, 1 L each

Formazin Calibration Standards

44156-00 Formazin Calibration Kit for user-prepared calibration (includes 500 mL of 4000 NTU Formazin, TenSette® Pipet, and calibration cylinder)

2461-49 Formazin Primary Standard, 4000 NTU, 500 mL
(replacement for P/N 44156-00)

44153-00 Calibration Cylinder, 1 L

Lit. No. 2457
XXXX Printed in U.S.A.
©Hach Company, 2003. All rights reserved.
In the interest of improving and updating its equipment, Hach Company reserves the right to alter specifications to equipment at any time.

At Hach, it's about learning from our customers and providing the right answers. It's more than ensuring the quality of water—it's about ensuring the quality of life. When it comes to the things that touch our lives...

Keep it pure.

Make it simple.

Be right.

For current price information, technical support, and ordering assistance, contact the Hach office or distributor serving your area.

In the United States, contact:

HACH COMPANY World Headquarters
P.O. Box 389
Loveland, Colorado 80539-0389
U.S.A.
Telephone: 800-227-4224
Fax: 970-669-2932
E-mail: orders@hach.com
www.hach.com

U.S. exporters and customers in Canada, Latin America, sub-Saharan Africa, Asia, and Australia/New Zealand, contact:

HACH COMPANY World Headquarters
P.O. Box 389
Loveland, Colorado 80539-0389
U.S.A.
Telephone: 970-669-3050
Fax: 970-461-3939
E-mail: intl@hach.com
www.hach.com

In Europe, the Middle East, and Mediterranean Africa, contact:

HACH + LANGE Europe
Dr. Bruno Lange GmbH & Co. KG
Willstätterstraße 11
D-40549 Düsseldorf
GERMANY
Tel: +49 (0) 211 5288-0
Fax: +49 (0) 211 5288-143
E-mail: kundenservice@drlange.de
www.drlange.com

HACH®

Be Right™

Hoffman®
A Pentair Company

Type 4 and Type 12 Enclosures for Flange-Mounted Disconnects

www.hoffmanonline.com

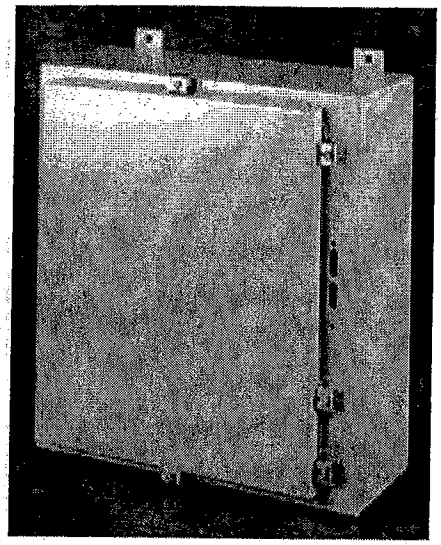

Application

Designed to house the following:

◆ **Allen-Bradley**

- Bulletin 1494V disconnect switches with flange-mounted variable depth operating mechanisms and Bulletin 1494V flange-mounted variable depth operating mechanisms for circuit breakers.
- Bulletin 140U flexible cable operating mechanisms for 140U molded case circuit breakers.

Allen-Bradley Bulletin 1494V-R1, -R2, and -W2 operating handles and Allen-Bradley Bulletin 1494F disconnect devices or Bulletin 1494D circuit breaker operators will not fit these enclosures.

◆ **ABB Controls** flange-mounted variable depth operating mechanisms for disconnect switches and circuit breakers. Also the cable version for circuit breakers.

◆ **Cutler-Hammer/Westinghouse** Type C361 flange-mounted variable depth operating mechanisms with disconnect switches and Type C371 flange-mounted variable depth operating mechanisms for circuit breakers.

◆ **General Electric** Type STDA flange handles and variable depth operating mechanisms for disconnect switches and circuit breakers. Also Spectra Flex™ cable operators for circuit breakers.

◆ **Siemens ITE** Max-Flex™ flange-mounted variable depth operating handles for circuit breakers.

◆ **Square D** Class 9422 disconnect switches with flange-mounted variable depth operating mechanisms or cable mechanisms and Class 9422 flange-mounted variable depth operating mechanisms or cable mechanisms for circuit breakers.

Bulletin A19 enclosures will not accept Square D Class 9422 bracket-mounted disconnect devices, 9422TG1, or TG2 devices.

Construction

- 14 gauge steel
- Seams continuously welded and ground smooth
- External mounting brackets
- Rolled flange around all sides of enclosure opening excludes liquids and contaminants
- All exterior hardware is stainless steel
- Stainless steel door clamps on three sides of door for watertight seal, additional door hardware not required
- Removable door with continuous hinge
- Data pocket is high impact thermoplastic
- Oil-resistant door gasket attached with oil-resistant adhesive
- Collar studs provided for mounting optional panels
- Holes provided in body for mounting disconnect operating handle and operating mechanism
- Bonding provision on door

Finish

ANSI 61 gray polyester powder coating inside and out over phosphatized surfaces. Optional panels are white.

Industry Standards

UL 508, File No. E61997: Type 4 and Type 12
NEMA/EEMAC Type 3, Type 4, Type 12, and Type 13
JIC standard EGP-1-1967
CSA File No. LR42186: Type 4 and Type 12
IEC 60529, IP66

Furnished with enclosures:

1. Bracket welded to door for attaching disconnect door catch (interlock)
2. Instructions to locate and install disconnect switches, circuit breakers, and operating mechanisms

Accessories

Blank Adapter Plate

See also General Accessories index

Corrosion Inhibitors
Electric Heater
Electrical Interlocks
Floor Stand Kit
Lighting Kit
Panels (See table)
Terminal Kit Assembly
Touch-Up Paint (ATPPY61)
Window Kit

Modification Services Program

You can customize this product to your unique requirements by specifying from these options:

- Enclosure height, width, depth
- Over 100 standard finish colors and textures
- Holes and cutouts in body, doors, subpanels
- Tapped holes, fasteners in enclosure or subpanel
- Mounting
- Doors
- Windows
- Standard accessories

For details, see Modification Services at hoffmanonline.com.
To order, contact your local Hoffman sales representative.

For information about modifications outside the scope of the Modification Services program, contact your Hoffman sales representative.

Ordering a Disconnect?

Disconnect switch (or circuit breakers), operating handle, and operating mechanism are not furnished with enclosure. Consult the Technical Information section of this catalog for wire bend information and hoffmanonline.com for disconnect manufacturer information. Consult drawings on following pages to match the disconnect device you are using with the correct enclosure size.

Standard Sizes Type 4 and Type 12 Enclosures for Flange-Mounted Disconnects

Enclosure Catalog Number	Enclosure Size A x B x C	* Panel Catalog Number	Panel Size D x E	Data Pocket Size in.	Data Pocket Size mm	No. of Clamps
A24HS2108LP	24.00 x 21.38 x 8.00 (610 x 543 x 203)	A24P20	21.00 x 17.00 (533 x 432)	6 x 6	152 x 152	5
A24HS2508LP	24.00 x 25.38 x 8.00 (610 x 645 x 203)	A24P24	21.00 x 21.00 (533 x 533)	6 x 6	152 x 152	5
A30HS2508LP	30.00 x 25.38 x 8.00 (762 x 645 x 203)	A30P24	27.00 x 21.00 (686 x 533)	12 x 12	305 x 305	5
A36HS2508LP	36.00 x 25.38 x 8.00 (914 x 645 x 203)	A36P24	33.00 x 21.00 (838 x 533)	12 x 12	305 x 305	5
A36HS3108LP	36.00 x 31.38 x 8.00 (914 x 797 x 203)	A36P30	33.00 x 27.00 (838 x 686)	12 x 12	305 x 305	7
A42HS3112LP	42.00 x 31.38 x 12.00 (1067 x 797 x 305)	A42P30	39.00 x 27.00 (991 x 686)	6 x 6	152 x 152	10
A42HS3712LP	42.00 x 37.38 x 12.00 (1067 x 949 x 305)	A42P36	39.00 x 33.00 (991 x 838)	12 x 12	305 x 305	10
A48HS3712LP	48.00 x 37.38 x 12.00 (1219 x 949 x 305)	A48P36	45.00 x 33.00 (1143 x 838)	12 x 12	305 x 305	10
A60HS3712LP	60.00 x 37.38 x 12.00 (1524 x 949 x 305)	A60P36	57.00 x 33.00 (1448 x 838)	12 x 12	305 x 305	11

Millimeter dimensions ( ) are for reference only; do not convert metric dimensions to inch.

* Panels must be ordered separately. Optional stainless steel or aluminum panels are available. See General Accessories.

©2003 Hoffman Enclosures Inc.

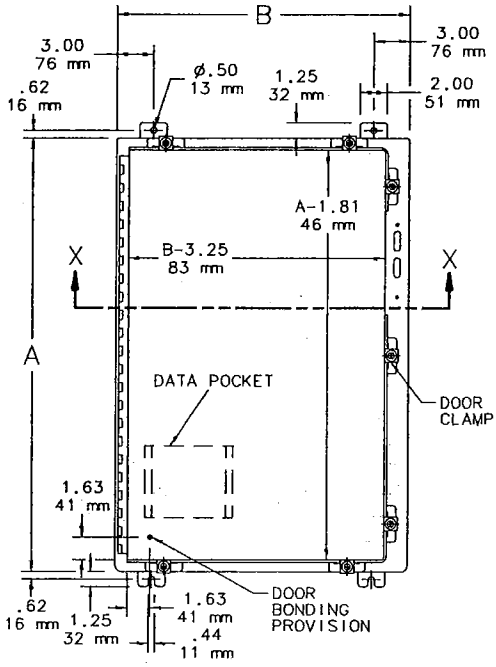

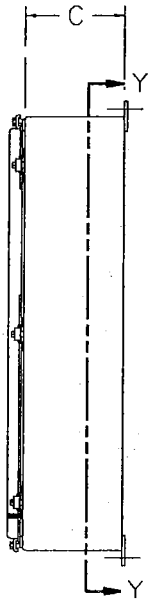

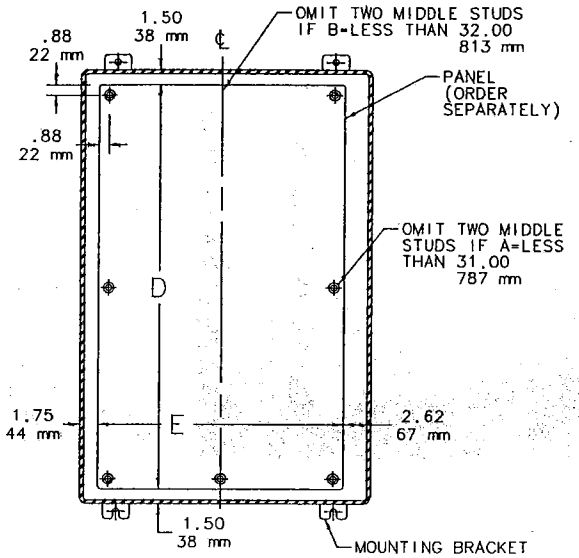

SECTION Y-Y

NOTE: 1. The number of door clamps is dependent on size of enclosure. Clamps are furnished along three sides of door (see table).
2. Panels have flanges along two sides when the side dimension is more than 21.00 inches (533mm). Panels A24P20 and A24P24 have flanges on all four sides.
3. Panels are 12 gauge steel.

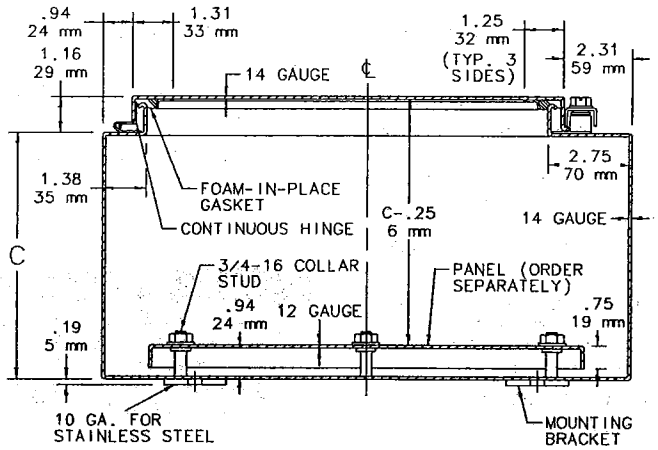

SECTION X-X

Disconnect Mounting Space

Disconnects will occupy space on panel shown by dimensions E1, F1, and G1. Wiring space W1 is available when disconnect is installed in the enclosure.

E1 = 8.62 (219) when C = 8.00 (203)
E1 = 11.62 (295) when C = 12.00 (305)
W1 = Wiring Space. See Appendix A, Technical Information, for wire bend space.

Refer to ***National Electrical Code® 2002*** article 430.10(B) for wiring space required for line side conductors to be connected to disconnect. **Verify your application to determine if wiring space is adequate.**

NOTE:
Be sure to match the disconnect device you are using with the correct enclosure size.

Consult disconnect manufacturer or see Disconnect Ordering Information at hoffmanonline.com for F1, G1, and W1 dimensions of various brands of disconnects.

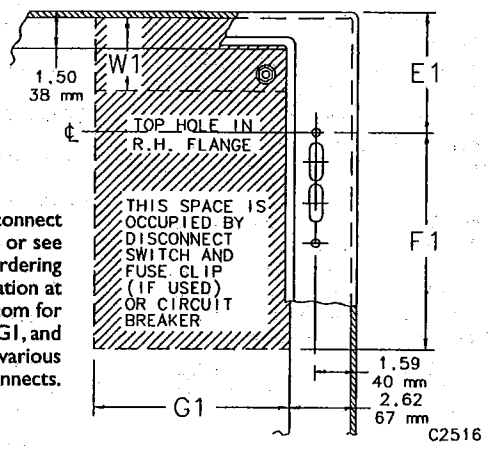

CONCEPT® Wall-Mount Enclosures

Standard Sizes CONCEPT® Single-Door Wall-Mount Enclosures

Enclosure Catalog Number ANSI 61 Gray	Enclosure Catalog Number RAL 7035 Lt. Gray	Door Ga.	Body Ga.	Enclosure Size A x B x C inch	(millimeter)	* CONCEPT® Panel Catalog Number	Panel Size D x E Inch	(mm)	Mounting G x H inch	(mm)	Latches qty	style	J inch	(mm)
CSD12126	CSD12126LG	16	16	12.00 x 12.00 x 6.00	(305 x 305 x 152)	CP1212	10.20 x 10.20	(259 x 259)	10.50 x 10.50	(267 x 267)	1	Qturn.	6.00	(152)
CSD16126	CSD16126LG	16	16	16.00 x 12.00 x 6.00	(406 x 305 x 152)	CP1612	14.20 x 10.20	(361 x 259)	14.50 x 10.50	(368 x 267)	1	Qturn.	8.00	(203)
CSD16166	CSD16166LG	16	16	16.00 x 16.00 x 6.00	(406 x 406 x 152)	CP1616	14.20 x 14.20	(361 x 361)	14.50 x 14.50	(368 x 368)	1	Qturn.	8.00	(203)
CSD16206	CSD16206LG	16	16	16.00 x 20.00 x 6.00	(406 x 508 x 152)	CP2016	18.20 x 14.20	(462 x 361)	14.50 x 18.50	(368 x 470)	1	Qturn.	8.00	(203)
CSD20166	CSD20166LG	16	16	20.00 x 16.00 x 6.00	(508 x 406 x 152)	CP2016	18.20 x 14.20	(462 x 361)	18.50 x 14.50	(470 x 368)	1	Qturn.	10.00	(254)
CSD20206	CSD20206LG	16	16	20.00 x 20.00 x 6.00	(508 x 508 x 152)	CP2020	18.20 x 18.20	(462 x 462)	18.50 x 18.50	(470 x 470)	1	Qturn.	10.00	(254)
CSD24166	CSD24166LG	16	16	24.00 x 16.00 x 6.00	(610 x 406 x 152)	CP2416	22.20 x 14.20	(564 x 361)	22.50 x 14.50	(572 x 368)	1	Qturn.	12.00	(305)
CSD24206	CSD24206LG	16	16	24.00 x 20.00 x 6.00	(610 x 508 x 152)	CP2420	22.20 x 18.20	(564 x 462)	22.50 x 18.50	(572 x 470)	1	Qturn.	12.00	(305)
CSD24246	CSD24246LG	14	16	24.00 x 24.00 x 6.00	(610 x 610 x 152)	CP2424	22.20 x 22.20	(564 x 564)	22.50 x 22.50	(572 x 572)	2	Qturn.	5.00	(127)
CSD16128	CSD16128LG	16	16	16.00 x 12.00 x 8.00	(406 x 305 x 203)	CP1612	14.20 x 10.20	(361 x 259)	14.50 x 10.50	(368 x 267)	1	Qturn.	8.00	(203)
CSD16168	CSD16168LG	16	16	16.00 x 16.00 x 8.00	(406 x 406 x 203)	CP1616	14.20 x 14.20	(361 x 361)	14.50 x 14.50	(368 x 368)	1	Qturn.	8.00	(203)
CSD16208	CSD16208LG	16	16	16.00 x 20.00 x 8.00	(406 x 508 x 203)	CP2016	18.20 x 14.20	(462 x 361)	14.50 x 18.50	(368 x 470)	1	Qturn.	8.00	(203)
CSD20168	CSD20168LG	16	16	20.00 x 16.00 x 8.00	(508 x 406 x 203)	CP2016	18.20 x 14.20	(462 x 361)	18.50 x 14.50	(470 x 368)	1	Qturn.	10.00	(254)
CSD20208	CSD20208LG	16	16	20.00 x 20.00 x 8.00	(508 x 508 x 203)	CP2020	18.20 x 18.20	(462 x 462)	18.50 x 18.50	(470 x 470)	1	Qturn.	10.00	(254)
CSD20248	CSD20248LG	16	16	20.00 x 24.00 x 8.00	(508 x 610 x 203)	CP2420	22.20 x 18.20	(564 x 462)	18.50 x 22.50	(470 x 572)	1	Qturn.	10.00	(254)
CSD24168	CSD24168LG	16	16	24.00 x 16.00 x 8.00	(610 x 406 x 203)	CP2416	22.20 x 14.20	(564 x 361)	22.50 x 14.50	(572 x 368)	1	Qturn.	12.00	(305)
CSD24208	CSD24208LG	16	16	24.00 x 20.00 x 8.00	(610 x 508 x 203)	CP2420	22.20 x 18.20	(564 x 462)	22.50 x 18.50	(572 x 470)	1	Qturn.	12.00	(305)
CSD24248	CSD24248LG	14	16	24.00 x 24.00 x 8.00	(610 x 610 x 203)	CP2424	22.20 x 22.20	(564 x 564)	22.50 x 22.50	(572 x 572)	2	Qturn.	5.00	(127)
CSD24308	CSD24308LG	14	16	24.00 x 30.00 x 8.00	(610 x 762 x 203)	CP3024	28.20 x 22.20	(716 x 564)	22.50 x 28.50	(572 x 724)	2	Qturn.	5.00	(127)
CSD30208	CSD30208LG	14	16	30.00 x 20.00 x 8.00	(762 x 508 x 203)	CP3020	28.20 x 18.20	(716 x 462)	28.50 x 18.50	(724 x 470)	2	Qturn.	5.00	(127)
CSD30248	CSD30248LG	14	16	30.00 x 24.00 x 8.00	(762 x 610 x 203)	CP3024	28.20 x 22.20	(716 x 564)	28.50 x 22.50	(724 x 572)	2	Qturn.	5.00	(127)
CSD30308	CSD30308LG	14	14	30.00 x 30.00 x 8.00	(762 x 762 x 203)	CP3030	28.20 x 28.20	(716 x 716)	28.50 x 28.50	(724 x 724)	2	Qturn.	5.00	(127)
CSD36248	CSD36248LG	14	16	36.00 x 24.00 x 8.00	(914 x 610 x 203)	CP3624	34.20 x 22.20	(869 x 564)	34.50 x 22.50	(876 x 572)	2	Qturn.	5.00	(127)
CSD36308	CSD36308LG	14	14	36.00 x 30.00 x 8.00	(914 x 762 x 203)	CP3630	34.20 x 28.20	(869 x 716)	34.50 x 28.50	(876 x 724)	2	Qturn.	5.00	(127)
CSD36368	CSD36368LG	14	14	36.00 x 36.00 x 8.00	(914 x 914 x 254)	CP3636	34.20 x 34.20	(869 x 869)	34.50 x 34.50	(876 x 876)	2	Qturn.	5.00	(127)
CSD161210	CSD161210LG	16	16	16.00 x 12.00 x 10.00	(406 x 305 x 254)	CP1612	14.20 x 10.20	(361 x 259)	14.50 x 10.50	(368 x 267)	1	Qturn.	8.00	(203)
CSD161610	CSD161610LG	16	16	16.00 x 16.00 x 10.00	(406 x 406 x 254)	CP1616	14.20 x 14.20	(361 x 361)	14.50 x 14.50	(368 x 368)	1	Qturn.	8.00	(203)
CSD162010	CSD162010LG	16	16	16.00 x 20.00 x 10.00	(406 x 508 x 254)	CP2016	18.20 x 14.20	(462 x 361)	14.50 x 18.50	(368 x 470)	1	Qturn.	8.00	(203)
CSD201610	CSD201610LG	16	16	20.00 x 16.00 x 10.00	(508 x 406 x 254)	CP2016	18.20 x 14.20	(462 x 361)	18.50 x 14.50	(470 x 368)	1	Qturn.	10.00	(254)
CSD202010	CSD202010LG	16	16	20.00 x 20.00 x 10.00	(508 x 508 x 254)	CP2020	18.20 x 18.20	(462 x 462)	18.50 x 18.50	(470 x 470)	1	Qturn.	10.00	(254)
CSD202410	CSD202410LG	16	16	20.00 x 24.00 x 10.00	(508 x 610 x 254)	CP2420	22.20 x 18.20	(564 x 462)	18.50 x 22.50	(470 x 572)	1	Qturn.	10.00	(254)
CSD241610	CSD241610LG	16	16	24.00 x 16.00 x 10.00	(610 x 406 x 254)	CP2416	22.20 x 14.20	(564 x 361)	22.50 x 14.50	(572 x 368)	1	Qturn.	12.00	(305)
CSD242010	CSD242010LG	16	16	24.00 x 20.00 x 10.00	(610 x 508 x 254)	CP2420	22.20 x 18.20	(564 x 462)	22.50 x 18.50	(572 x 470)	1	Qturn.	12.00	(305)
CSD242410	CSD242410LG	14	16	24.00 x 24.00 x 10.00	(610 x 610 x 254)	CP2424	22.20 x 22.20	(564 x 564)	22.50 x 22.50	(572 x 572)	2	Qturn.	5.00	(127)
CSD243010	CSD243010LG	14	16	24.00 x 30.00 x 10.00	(610 x 762 x 254)	CP3024	28.20 x 22.20	(716 x 564)	22.50 x 28.50	(572 x 724)	2	Qturn.	5.00	(127)
CSD302010	CSD302010LG	14	16	30.00 x 20.00 x 10.00	(762 x 508 x 254)	CP3020	28.20 x 18.20	(716 x 462)	28.50 x 18.50	(724 x 470)	2	Qturn.	5.00	(127)
CSD302410	CSD302410LG	14	16	30.00 x 24.00 x 10.00	(762 x 610 x 254)	CP3024	28.20 x 22.20	(716 x 564)	28.50 x 22.50	(724 x 572)	2	Qturn.	5.00	(127)
CSD303010	CSD303010LG	14	14	30.00 x 30.00 x 10.00	(762 x 762 x 254)	CP3030	28.20 x 28.20	(716 x 716)	28.50 x 28.50	(724 x 724)	2	Qturn.	5.00	(127)
CSD362410	CSD362410LG	14	16	36.00 x 24.00 x 10.00	(914 x 610 x 254)	CP3624	34.20 x 22.20	(869 x 564)	34.50 x 22.50	(876 x 572)	2	Qturn.	5.00	(127)
CSD363010	CSD363010LG	14	14	36.00 x 30.00 x 10.00	(914 x 762 x 254)	CP3630	34.20 x 28.20	(869 x 716)	34.50 x 28.50	(876 x 724)	2	Qturn.	5.00	(127)
CSD363610	CSD363610LG	14	14	36.00 x 36.00 x 10.00	(914 x 914 x 254)	CP3636	34.20 x 34.20	(869 x 869)	34.50 x 34.50	(876 x 876)	2	Qturn.	5.00	(127)
CSD423610	CSD423610LG	14	14	42.00 x 36.00 x 10.00	(1067 x 762 x 254)	CP4236	40.20 x 34.20	(1021 x 869)	40.50 x 34.50	(1029 x 876)	1	3 pt.	21.00	(533)
CSD482410	CSD482410LG	14	14	48.00 x 24.00 x 10.00	(1219 x 610 x 254)	CP4824	46.20 x 22.20	(1173 x 564)	46.50 x 22.50	(1181 x 572)	1	3 pt.	24.00	(610)
CSD483610	CSD483610LG	14	14	48.00 x 36.00 x 10.00	(1219 x 762 x 254)	CP4836	46.20 x 34.20	(1173 x 869)	46.50 x 34.50	(1181 x 876)	1	3 pt.	24.00	(610)

Millimeter dimensions ( ) are for reference only; do not convert metric dimensions to inch.

* Panels must be ordered separately. Optional zinc-plated CONCEPT® panels available for most sizes. Optional NEMA-size panels require conversion kit cat. number CCPM4 (see General Accessories).

NOTE: Panels have a formed flange along any side that is longer than 22.20 in. (564mm). Panels CP2420 and CP2424 have a flange on all four sides.

Data subject to change without notice

☎ 763 422 2211 FAX 763 422 2600

©2003 Hoffman Enclosures Inc.

■ CONCEPT® Single-Door Wall-Mount Enclosures

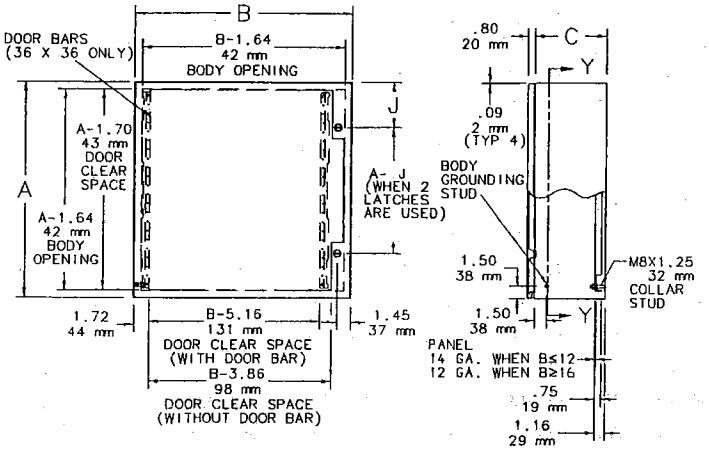

Single-Door Enclosure with Quarter-turn Latching

Data Pockets for Solid Door Enclosures		
Enclosure Size		
A	B	Pocket
Any	12.00 (305)	None
<30.00 (762)	<20.00 (508)	Small
>30.00 (762)	>20.00 (508)	Large

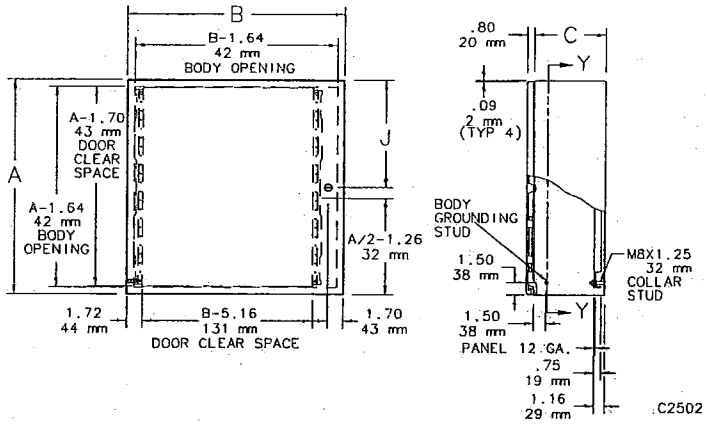

Single-Door Enclosure with 3-point Latching

For Section Y-Y see following page

CSD603610	CSD603610LG	14	14	60.00 x 36.00 x 10.00	(1524 x 914 x 254)	CP6036	58.20 x 34.20	(1478 x 869)	58.50 x 34.50	(1486 x 876)	1	3-pt.	30.00	(762)
CSD202012	CSD202012LG	16	16	20.00 x 20.00 x 12.00	(508 x 508 x 305)	CP2020	18.20 x 18.20	(462 x 462)	18.50 x 18.50	(470 x 470)	1	Qtum.	10.00	(254)
CSD242012	CSD242012LG	16	16	24.00 x 20.00 x 12.00	(610 x 508 x 305)	CP2420	22.20 x 18.20	(564 x 462)	22.50 x 18.50	(572 x 470)	1	Qtum.	12.00	(305)
CSD242412	CSD242412LG	14	16	24.00 x 24.00 x 12.00	(610 x 610 x 305)	CP2424	22.20 x 22.20	(564 x 564)	22.50 x 22.50	(572 x 572)	2	Qtum.	5.00	(127)
CSD302412	CSD302412LG	14	16	30.00 x 24.00 x 12.00	(762 x 610 x 305)	CP3024	28.20 x 22.20	(716 x 564)	28.50 x 22.50	(724 x 572)	2	Qtum.	5.00	(127)
CSD303012	CSD303012LG	14	14	30.00 x 30.00 x 12.00	(762 x 762 x 305)	CP3030	28.20 x 28.20	(716 x 716)	28.50 x 28.50	(724 x 724)	2	Qtum.	5.00	(127)
CSD362412	CSD362412LG	14	16	36.00 x 24.00 x 12.00	(914 x 610 x 305)	CP3624	34.20 x 22.20	(869 x 564)	34.50 x 22.50	(876 x 572)	2	Qtum.	5.00	(127)
CSD363012	CSD363012LG	14	14	36.00 x 30.00 x 12.00	(914 x 762 x 305)	CP3630	34.20 x 28.20	(869 x 716)	34.50 x 28.50	(876 x 724)	2	Qtum.	5.00	(127)
CSD363612	CSD363612LG	14	14	36.00 x 36.00 x 12.00	(914 x 914 x 305)	CP3636	34.20 x 34.20	(869 x 869)	34.50 x 34.50	(876 x 876)	2	Qtum.	5.00	(127)
CSD423612	CSD423612LG	14	14	42.00 x 36.00 x 12.00	(1067 x 914 x 305)	CP4236	40.20 x 34.20	(1021 x 869)	40.50 x 34.50	(1029 x 876)	1	3-point	21.00	(533)
CSD482412	CSD482412LG	14	14	48.00 x 24.00 x 12.00	(1219 x 610 x 305)	CP4824	46.20 x 22.20	(1173 x 564)	46.50 x 22.50	(1181 x 572)	1	3-point	24.00	(610)
CSD483612	CSD483612LG	14	14	48.00 x 36.00 x 12.00	(1219 x 914 x 305)	CP4836	46.20 x 34.20	(1173 x 869)	46.50 x 34.50	(1181 x 876)	1	3-point	24.00	(610)
CSD603612	CSD603612LG	14	14	60.00 x 36.00 x 12.00	(1524 x 914 x 305)	CP6036	58.20 x 34.20	(1478 x 869)	58.50 x 34.50	(1486 x 876)	1	3-point	30.00	(762)
CSD242416	CSD242416LG	14	14	24.00 x 24.00 x 16.00	(610 x 610 x 406)	CP2424	22.20 x 22.20	(564 x 564)	22.50 x 22.50	(572 x 572)	2	Qtum.	5.00	(127)
CSD363016	CSD363016LG	14	14	36.00 x 30.00 x 16.00	(914 x 762 x 406)	CP3630	34.20 x 28.20	(869 x 716)	34.50 x 28.50	(876 x 724)	2	Qtum.	5.00	(127)
CSD483616	CSD483616LG	14	14	48.00 x 36.00 x 16.00	(1219 x 914 x 406)	CP4836	46.20 x 34.20	(1173 x 869)	46.50 x 34.50	(1181 x 876)	1	3-point	24.00	(610)
CSD242420	CSD242420LG	14	14	24.00 x 24.00 x 20.00	(610 x 610 x 508)	CP2424	22.20 x 22.20	(564 x 564)	22.50 x 22.50	(572 x 572)	2	Qtum.	5.00	(127)
CSD302420	CSD302420LG	14	14	30.00 x 24.00 x 20.00	(762 x 610 x 508)	CP3024	28.20 x 22.20	(716 x 564)	28.50 x 22.50	(724 x 572)	2	Qtum.	5.00	(127)
CSD363020	CSD363020LG	14	14	36.00 x 30.00 x 20.00	(914 x 762 x 508)	CP3630	34.20 x 28.20	(869 x 716)	34.50 x 28.50	(876 x 724)	2	Qtum.	5.00	(127)

NOTE: Panels have a formed flange along any side that is longer than 22.20 in. (564mm). Panels CP2420 and CP2424 have a flange on all four sides.

 ©2003 Hoffman Enclosures Inc.

Hoffman®
A Pentair Company

CONCEPT® Wall-Mount Enclosures with Windows

Rev. A June 2003

Standard Sizes CONCEPT® Single-Door Wall-Mount Enclosures with Windows

Enclosure Catalog Number ANSI 61 Gray	Enclosure Catalog Number RAL 7035 Lt. Gray	Door Gauge	Body Gauge	Enclosure Size A x B x C	* CONCEPT® Panel Catalog Number	Panel Size D x E	Mounting G x H	Window Size M x N	Latches qty	Latches style	J
CSD12126W	CSD12126WLG	14	16	12.00 x 12.00 x 6.00 (305 x 305 x 152)	CP1212	10.20 x 10.20 (259 x 259)	10.50 x 10.50 (267 x 267)	8.74 x 7.10 (222 x 180)	1	Quarter-turn	6.00 (152)
CSD16126W	CSD16126WLG	14	16	16.00 x 12.00 x 6.00 (406 x 305 x 152)	CP1612	14.20 x 10.20 (361 x 259)	14.50 x 10.50 (368 x 267)	12.74 x 7.10 (324 x 180)	1	Quarter-turn	8.00 (203)
CSD20166W	CSD20166WLG	14	16	20.00 x 16.00 x 6.00 (508 x 406 x 152)	CP2016	18.20 x 14.20 (462 x 361)	18.50 x 14.50 (470 x 368)	16.74 x 11.10 (425 x 282)	1	Quarter-turn	10.00 (254)
CSD20206W	CSD20206WLG	14	16	20.00 x 20.00 x 6.00 (508 x 508 x 152)	CP2020	18.20 x 18.20 (462 x 462)	18.50 x 18.50 (470 x 470)	16.74 x 15.10 (425 x 384)	1	Quarter-turn	10.00 (254)
CSD24206W	CSD24206WLG	14	16	24.00 x 20.00 x 6.00 (610 x 508 x 152)	CP2420	22.20 x 18.20 (564 x 462)	22.50 x 18.50 (572 x 470)	20.74 x 15.10 (527 x 384)	1	Quarter-turn	12.00 (305)
CSD24246W	CSD24246WLG	14	16	24.00 x 24.00 x 6.00 (610 x 610 x 152)	CP2424	22.20 x 22.20 (564 x 564)	22.50 x 22.50 (572 x 572)	20.74 x 17.68 (527 x 449)	2	Quarter-turn	5.00 (127)
CSD16128W	CSD16128WLG	14	16	16.00 x 12.00 x 8.00 (406 x 305 x 203)	CP1612	14.20 x 10.20 (361 x 259)	14.50 x 10.50 (368 x 267)	12.74 x 7.10 (324 x 180)	1	Quarter-turn	8.00 (203)
CSD20168W	CSD20168WLG	14	16	20.00 x 16.00 x 8.00 (508 x 406 x 203)	CP2016	18.20 x 14.20 (462 x 361)	18.50 x 14.50 (470 x 368)	16.74 x 11.10 (425 x 282)	1	Quarter-turn	10.00 (254)
CSD20208W	CSD20208WLG	14	16	20.00 x 20.00 x 8.00 (508 x 508 x 203)	CP2020	18.20 x 18.20 (462 x 462)	18.50 x 18.50 (470 x 470)	16.74 x 15.10 (425 x 384)	1	Quarter-turn	10.00 (254)
CSD24208W	CSD24208WLG	14	16	24.00 x 20.00 x 8.00 (610 x 508 x 203)	CP2420	22.20 x 18.20 (564 x 462)	22.50 x 18.50 (572 x 470)	20.74 x 15.10 (527 x 384)	1	Quarter-turn	12.00 (305)
CSD24248W	† CSD24248WLG	14	16	24.00 x 24.00 x 8.00 (610 x 610 x 203)	CP2424	22.20 x 22.20 (564 x 564)	22.50 x 22.50 (572 x 572)	20.74 x 17.68 (527 x 449)	2	Quarter-turn	5.00 (127)
CSD30248W	CSD30248WLG	14	16	30.00 x 24.00 x 8.00 (762 x 610 x 203)	CP3024	28.20 x 22.20 (716 x 564)	28.50 x 22.50 (724 x 572)	26.74 x 17.68 (679 x 449)	2	Quarter-turn	5.00 (127)
CSD161210W	CSD161210WLG	14	16	16.00 x 12.00 x 10.00 (406 x 305 x 203)	CP1612	14.20 x 10.20 (361 x 259)	14.50 x 10.50 (368 x 267)	12.74 x 7.10 (324 x 180)	1	Quarter-turn	8.00 (203)
CSD201610W	CSD201610WLG	14	16	20.00 x 16.00 x 10.00 (508 x 406 x 203)	CP2016	18.20 x 14.20 (462 x 361)	18.50 x 14.50 (470 x 368)	16.74 x 11.10 (425 x 282)	1	Quarter-turn	10.00 (254)
CSD202010W	CSD202010WLG	14	16	20.00 x 20.00 x 10.00 (508 x 508 x 203)	CP2020	18.20 x 18.20 (462 x 462)	18.50 x 18.50 (470 x 470)	16.74 x 15.10 (425 x 384)	1	Quarter-turn	10.00 (254)
CSD242010W	CSD242010WLG	14	16	24.00 x 20.00 x 10.00 (610 x 508 x 203)	CP2420	22.20 x 18.20 (564 x 462)	22.50 x 18.50 (572 x 470)	20.74 x 15.10 (527 x 384)	1	Quarter-turn	12.00 (305)
CSD242410W	CSD242410WLG	14	16	24.00 x 24.00 x 10.00 (610 x 610 x 203)	CP2424	22.20 x 22.20 (564 x 564)	22.50 x 22.50 (572 x 572)	20.74 x 17.68 (527 x 449)	2	Quarter-turn	5.00 (127)
CSD302410W	CSD302410WLG	14	16	30.00 x 24.00 x 10.00 (762 x 610 x 203)	CP3024	28.20 x 22.20 (716 x 564)	28.50 x 22.50 (724 x 572)	26.74 x 17.68 (679 x 449)	2	Quarter-turn	5.00 (127)
CSD202012W	CSD202012WLG	14	16	20.00 x 20.00 x 12.00 (508 x 508 x 305)	CP2020	18.20 x 18.20 (462 x 462)	18.50 x 18.50 (470 x 470)	16.74 x 15.10 (425 x 384)	1	Quarter-turn	10.00 (254)
CSD242012W	CSD242012WLG	14	16	24.00 x 20.00 x 12.00 (610 x 508 x 305)	CP2420	22.20 x 18.20 (564 x 462)	22.50 x 18.50 (572 x 470)	20.74 x 15.10 (527 x 384)	1	Quarter-turn	12.00 (305)
CSD242412W	CSD242412WLG	14	16	24.00 x 24.00 x 12.00 (610 x 610 x 305)	CP2424	22.20 x 22.20 (564 x 564)	22.50 x 22.50 (572 x 572)	20.74 x 17.68 (527 x 449)	2	Quarter-turn	5.00 (127)
CSD302412W	CSD302412WLG	14	16	30.00 x 24.00 x 12.00 (762 x 610 x 305)	CP3024	28.20 x 22.20 (716 x 564)	28.50 x 22.50 (724 x 572)	26.74 x 17.68 (679 x 449)	2	Quarter-turn	5.00 (127)
CSD242416W	CSD242416WLG	14	14	24.00 x 24.00 x 16.00 (610 x 610 x 406)	CP2424	22.20 x 22.20 (564 x 564)	22.50 x 22.50 (572 x 572)	20.74 x 17.68 (527 x 449)	2	Quarter-turn	5.00 (127)
CSD242420W	CSD242420WLG	14	14	24.00 x 24.00 x 20.00 (610 x 610 x 508)	CP2424	22.20 x 22.20 (564 x 564)	22.50 x 22.50 (572 x 572)	20.74 x 17.68 (527 x 449)	2	Quarter-turn	5.00 (127)
CSD302420W	CSD302420WLG	14	14	30.00 x 24.00 x 20.00 (762 x 610 x 508)	CP3024	28.20 x 22.20 (716 x 564)	28.50 x 22.50 (724 x 572)	26.74 x 17.68 (679 x 449)	2	Quarter-turn	5.00 (127)

Millimeter dimensions ( ) are for reference only; do not convert metric to inch.

* Panels must be ordered separately. Optional zinc-plated CONCEPT® panels available for most sizes. Optional NEMA-size panels require conversion kit cat. number CCPM4 (see General Accessories).

NOTE: Panels have a formed flange along any side that is longer than 22.20 in. (564mm).

Data subject to change without notice

☎ 763 422 2211 FAX 763 422 2600

©2003 Hoffman Enclosures Inc.

■ CONCEPT® Single-Door Wall-Mount Enclosures with Windows

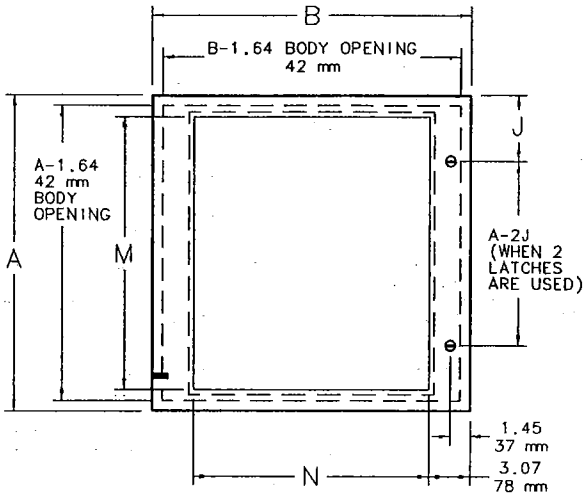

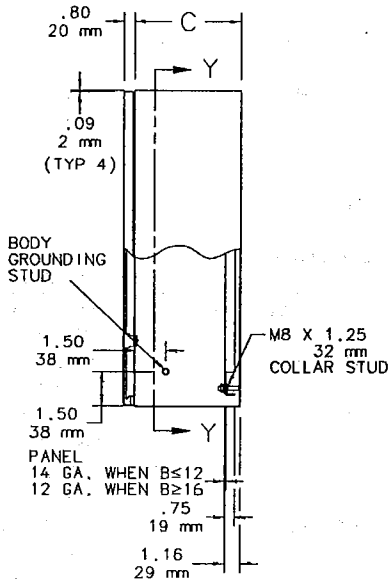

Window-Door Enclosure with Quarter-turn Latching

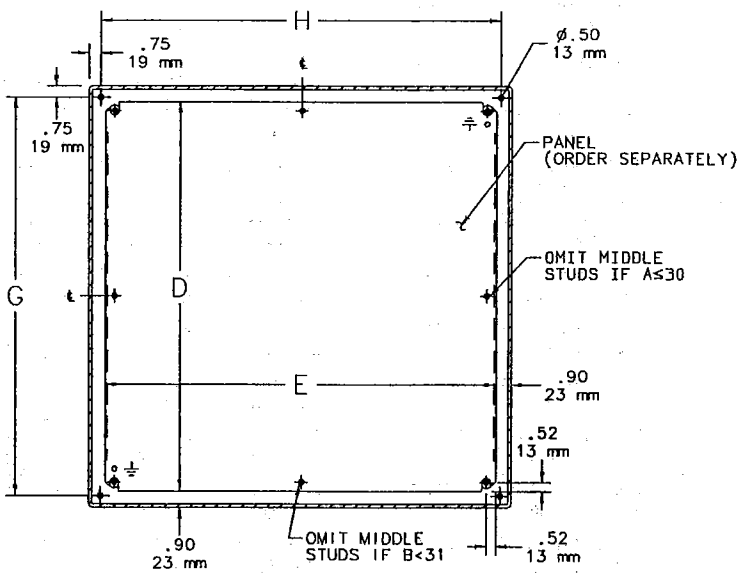

SECTION Y-Y
(WITH CONCEPT® PANEL INSTALLED)

C2503

Cooling Fan and Exhaust Packages

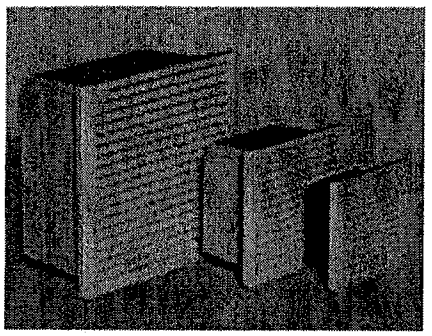

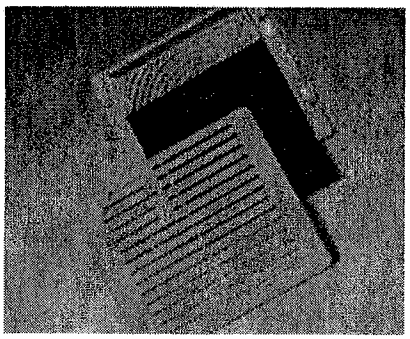

Application

Designed for use in enclosures where space is limited and reliable filtered airflow is required. The Cooling Fan Package is the air inlet of a cooling system. It requires at least one Exhaust Package of the same size and type rating to provide the outlet. Where positive air flow through the enclosure is not required, Exhaust Packages can be used on both the inlet and outlet.

Note: Fan and Exhaust Packages must be ordered separately.

The Cooling Fan Package is available for both Type 1 and Type 12 enclosures. Type 1 is recommended in UL Type 1 environments where the ambient air is cool and clean. Type 12 is recommended in UL Type 12 environments where the ambient air is cool and may contain small amounts of dust, foreign bodies, and splashing water. For both Type 1 and Type 12 systems a monthly maintenance schedule is recommended to ensure optimal cooling performance.

The cooling fan and exhaust packages come with RAL 7035 composite or brushed stainless steel grilles; replacement black ABS composite and brushed stainless steel grilles are available separately.

The optional EMC Upgrade Kit prepares the fan and exhaust packages for use where EMC protection is required.

Construction

- Cooling Fan Package includes fan, air filter, composite air plenum, finger guard, and grille
- Exhaust Package includes air filter, filter retainer with integral finger guard, and grille
- EMC Upgrade Kit includes a grille standoff collar and a special EMC shielding grille. It can be used with either the Fan or the Exhaust Package
- Optional grille, available in both brushed stainless steel and black ABS plastic, can be used with either the fan or exhaust package
- Washable foam filter in both fan and exhaust packages provides good arrestment of airborne dirt with minimal pressure drop. Optional aluminum air filter is also available.
- Durable composite air plenum and grille take up minimal enclosure space. Plenum permits even airflow through the filter for maximum filtering efficiency. An integral and removable finger guard on either side of the plenum adds safety and convenience.
- Air filters can be accessed for cleaning from outside the enclosure
- Rigid fan housing eliminates breakage and grounding problems
- Dynamically balanced fan impellers molded from polycarbonate material
- 4 inch fan is thermally protected and uses permanently lubricated ball bearings
- 6 and 10 inch fans have ball bearing construction and split capacitor motors that are thermally protected to avoid premature failure
- Engineered for 50,000 hours of continuous operation without lubrication or service
- Fans have leadwires for power connection with ends stripped 1/2 inch (12 millimeters)
- All mounting hardware and installation instructions are furnished

Finish

Fan housing, composite plenum, and grille are RAL 7035 light gray. Stainless steel grilles have brushed finish. ABS composite grille is black.

Filters

Standard and Hi-Density Type 12 air filters are washable foam.

Industry Standards

UL 508 Component Recognized,
File Number SA61997
CSA certified (fan only)
CE

Accessories

Temperature Control Switch
Grille Options:
Stainless Steel Grille
Black Grille
Aluminum and Hi-Density Type 12 Filters
EMC Upgrade Kit

Installation

Fan and exhaust packages can be installed on any surface of an enclosure. They are most effective when the fan assembly is located on a lower panel of the enclosure and the exhaust grille is positioned near the top on the opposite side. This installation assists heat transfer by causing slightly more turbulence and also prolongs the working life of the fan since it is located in the path of the cooler air entering the enclosure.

Cooling fans and exhaust grilles can be turned 90° for mounting on narrow enclosures. Allow adequate clearance for servicing the fan when equipment is installed inside the enclosure and for replacing filters on both the fan and the exhaust. Cutout dimensions for both the fan and the exhaust are shown in the order table. The fan and exhaust packages must be ordered separately *(see page 2)*.

Cooling Fan and Exhaust Packages

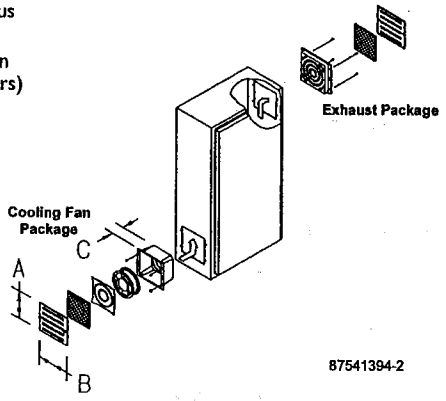

Hoffman®
A Pentair Company

Cooling Fan and Exhaust Packages

Standard Sizes and Cutout Dimensions Cooling Fan and Exhaust Packages

Catalog Number Composite Grille UL 508 Type 1 Fan*	Exhaust	Stainless Grille UL 508 Type 1 Fan*	Exhaust	Composite Grille UL 508 Type 12 Fan*	Exhaust	Nominal Fan Size	A in.	mm	B in.	mm	C in.	mm	E in.	mm	F in.	mm	H in.	mm	T in.	mm	W in.	mm
TFP41	TEP4	TFP41SS	TEP4SS	TFP41UL12	TEP4UL12	4 inch	6.29	160	7.37	187	2.65	67	4.12	105	5.66	144	0.77	20	4.12	105	6.39	162
TFP42	TEP4	TFP42SS	TEP4SS	TFP42UL12	TEP4UL12	4 inch	6.29	160	7.37	187	2.65	67	4.12	105	5.66	144	0.77	20	4.12	105	6.39	162
TFP61	TEP6	TFP61SS	TEP6SS	TFP61UL12	TEP6UL12	6 inch	7.80	198	8.87	225	3.75	95	4.5	114	7.16	182	1.33	34	4.50	114	7.89	200
TFP62	TEP6	TFP62SS	TEP6SS	TFP62UL12	TEP6UL12	6 inch	7.80	198	8.87	225	3.75	95	4.5	114	7.16	182	1.33	34	4.50	114	7.89	200
TFP101	TEP10	TFP101SS	TEP10SS	TFP101UL12	TEP10UL12	10 inch	11.81	300	12.99	330	5.25	133	6.88	175	11.16	283	2.14	54	6.88	175	11.89	302
TFP102	TEP10	TFP102SS	TEP10SS	TFP102UL12	TEP10UL12	10 inch	11.81	300	12.99	330	5.25	133	6.88	175	11.16	283	2.14	54	6.88	175	11.89	302

* An intake grille and filter are included with each Cooling Fan Package. At least one Exhaust Package is normally required for each installation. Must be ordered separately. Optional grilles and replacement filters are also available.

Technical Performance Data for Cooling Fan Packages

Catalog Number Composite Grille UL Type 1	Stainless Grille UL Type 1	*CFM 50/60Hz	Composite Grille UL Type 12	*CFM 50/60 Hz	Watts 50/60 Hz	Voltage	Hz	Amps 50/60 Hz	Maximum Operating Temperature °F	(°C)	Noise SIL (dB)	Weight lb	(kg)
TFP41	TFP41SS	46/55	TFP41UL12	21/25	17/15	115	50/60	.26/.21	156	(70)	37/41	4.2	(1.90)
TFP42	TFP42SS	46/55	TFP42UL12	21/25	16/14	230	50/60	.14/.11	158	(70)	37/41	4.3	(1.95)
TFP61	TFP61SS	117/140	TFP61UL12	50/60	36/32	115	50/60	.45/.36	158	(70)	50/56	5.3	(2.40)
TFP62	TFP62SS	117/140	TFP62UL12	50/60	39/35	230	50/60	.23/.18	158	(70)	50/56	5.4	(2.45)
TFP101	TFP101SS	180/215	TFP101UL12	63/75	64/80	115	50/60	.58/.70	167	(75)	54/61	12.0	(5.45)
TFP102	TFP102SS	180/215	TFP102UL12	63/75	64/80	230	50/60	.29/.35	167	(75)	54/61	11.4	(5.17)

* CFM with single exhaust grille installed.

Fan and Exhaust Grille

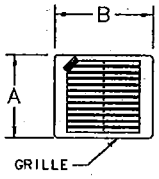

4" Fan (Fan Mounted to Back of Plenum)

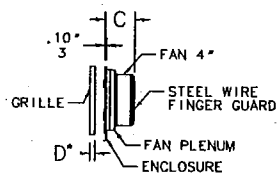

6" and 10" Fan (Box Style Plenum)

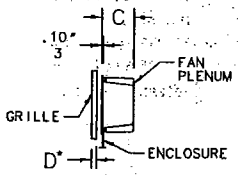

Fan Size	D* in.	mm
4 in.	0.45	11
6 in.	0.49	12
10 in.	0.55	14

Fan and Exhaust Package Mounting Cutout

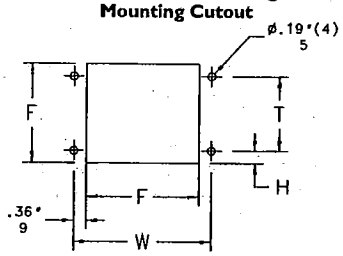

87541396

Performance Curve for a 4" Cooling Fan Package @ 60 Hz

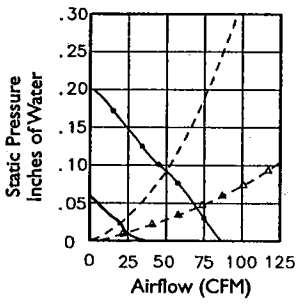

- 4 in. Cooling Fan Package
- 4 in. Exhaust Package
- Two 4 in. Exhaust Packages
- 4 in. Type 12 Cooling Fan Package

Performance Curve for a 6" Cooling Fan Package @ 60 Hz

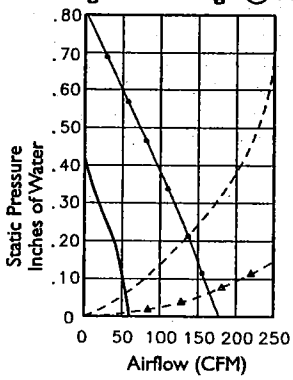

- 6 in. Cooling Fan Package
- 6 in. Exhaust Package
- Two 6 in. Exhaust Packages
- 6 in. Type 12 Cooling Fan Package

Performance Curve for a 10" Cooling Fan Package @ 60 Hz

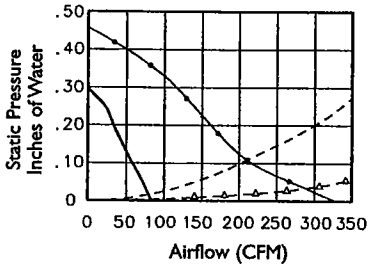

- 10 in. Cooling Fan Package
- 10 in. Exhaust Package
- Two 10 in. Exhaust Packages
- 10 in. Type 12 Cooling Fan Package

Data subject to change without notice

☎ 763 422 2211 FAX 763 422 2600

© 2002 Hoffman Enclosures Inc.

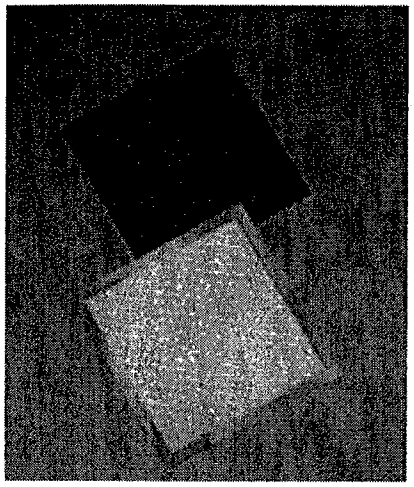

Optional Grilles and Replacement Filters

Optional grilles offer the choice of stainless steel or black ABS plastic grilles to replace the standard RAL 7035 gray composite or stainless steel grilles on both fan and exhaust packages.

Standard replacement Type 1 and Type 12 filters are washable foam. To maintain UL Type 12 rating on the enclosure, UL Type 12 filters must be used on both the inlet and outlet. Washable aluminum filters are also available. Aluminum filters are compatible with Type 1 systems only.

Catalog Number	Description	Fits Fan and Exhaust Nominal Size	Grille Size
TG4SS	Brushed stainless steel grille	4 in.	6.29 x 7.37 x .81 (160 x 187 x 21)
TG4B	Black ABS plastic grille (160 x 187 x 21)	4 in.	6.29 x 7.37 x.81
AFLTR4	Type 1 filter replacement (5/package)	4 in.	n/a
AFLTR4AL	Aluminum filter replacement (5/package)	4 in.	n/a
TFLT4UL12	Type 12 filter replacement (5/package)	4 in.	n/a
TG6SS	Brushed stainless steel grille	6 in.	7.8 x 8.87 x .75 (198 x 225 x 19)
TG6B	Black ABS plastic grille	6 in.	7.8 x 8.87 x .75 (198 x 225 x 19)
AFLTR6	Foam filter replacement (5/package)	6 in.	n/a
AFLTR6AL	Aluminum filter replacement (5/package)	6 in.	n/a
TFLT6UL12	UL 12 filter replacement for (5/package)	6 in.	n/a
TG10SS	Brushed stainless steel grille	6 in.	11.81 x 12.99 x .75 (300 x 330 x 19)
TG10B	Black ABS plastic grille	6 in.	11.81 x 12.99 x .75 (300 x 330 x 19)
AFLTR10	Foam filter replacement (5/package)	10 in.	n/a
AFLTR10AL	Aluminum filter replacement (5/package)	10 in.	n/a
TFLT10UL12	UL 12 filter replacement (5/package)	10 in.	n/a

Millimeter dimensions ( ) are for reference only; do not convert metric dimensions to inch.

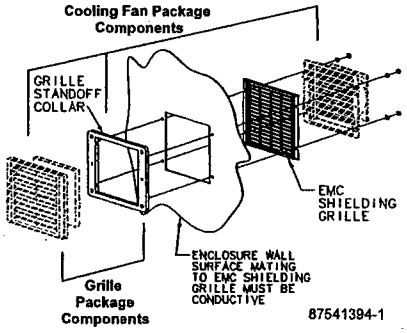

EMC Upgrade Kit

With the addition of this kit, the cooling fan and exhaust packages are upgraded to provide EMC (electromagnetic compatibility) protection. Consult Hoffman for shielding effectiveness (dB attenuation vs. frequency).

Note: Separate kits must be installed on both the inlet and outlet. Cooling fan and exhaust package must be ordered separately.

Catalog Number	Fits Fan and Exhaust Nominal Size
T4EMC	4 in.
T6EMC	6 in.
T10EMC	10 in.

BASE SPECIFICATIONS

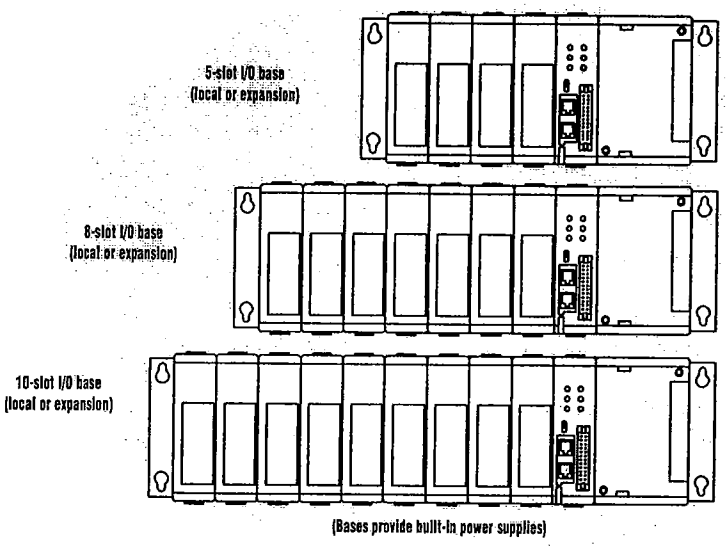

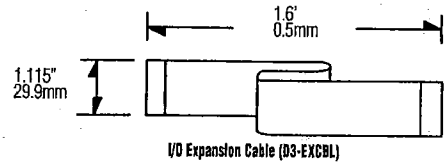

I/O Expansion Cable (D3-EXCBL)

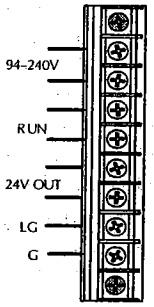

94-240 VAC Terminal Strip

	D3-05B-1 $161.00	D3-05BDC $178.00	D3-08B-1 $214.00	D3-10B-1 $261.00	D3-10BDC $269.00
Number of Slots	5	5	8	10	10
Local CPU Base	Yes	Yes	Yes	Yes	Yes
Expansion Base	Yes CPU base and two expansion bases. If CPU base is 5-slot, then the expansion bases must be 5-slot also.	Yes CPU base and two expansion bases. If CPU base is 5-slot, then the expansion bases must be 5-slot also.	Yes (D3-350 only) CPU base and two expansion bases. If CPU base is 8-slot, then the expansion bases must be 8-slot or 5-slot	Yes CPU base and one expansion bases. If CPU base is 10-slot, then the expansion bases must be 10-slot or 5-slot	Yes CPU base and one expansion bases. If CPU base is 10-slot, then the expansion bases must be 10-slot or 5-slot.
Input Voltage Range	85-264VAC 47-63Hz	20.5-30VDC <10% ripple	85-264VAC 47-63Hz	85-264VAC 47-63Hz	20.5-30VDC <10% ripple
Base Power Consumption	85 VA Max	48 Watts	85VA Max	85VA Max	65 Watts
Inrush Current Max.	30A 1ms	30A	30A 1ms	30A 1ms	30A
Dielectric Strength	1500VAC for one minute between terminals of AC P/S, run output, common, 24VDC	1500VAC for one minute between 24VDC input terminals and run output	1500VAC for one minute between terminals of AC P/S, run output, common, 24VDC	2000VAC for one minute between terminals of AC P/S, run output, common, 24VDC	1500VAC for one minute between 24VDC input terminals and run output
Insulation Resistance	>10Mohm at 500VDC	>10Mohm at 500VDC	>10Mohm at 500VDC	>10Mohm at 500VDC	>10Mohm at 500VDC
Power Supply Output (Voltage Ranges and Ripple)	(5VDC) 4.75-5.25V 5% ripple (9VDC) 8.5-10V 5% ripple (24VDC) 20-28V 5% ripple	(5VDC) 4.75-5.25V 5% ripple (9VDC) 8.5-10V 5% ripple (24VDC) 20-28V 5% ripple	(5VDC) 4.75-5.25V 5% ripple (9VDC) 8.5-10V 5% ripple (24VDC) 20-28V 5% ripple	(5VDC) 4.75-5.25V 5% ripple (9VDC) 8.5-10V 5% ripple (24VDC) 20-28V 5% ripple	(5VDC) 4.75-5.25V 5% ripple (9VDC) 8.5-10V 5% ripple (24VDC) 20-28V 5% ripple
5 VDC Current Supplied	.7A	1.4A	1.0A	1.0A	1.4A
9VDC Current Supplied	2.0A	0.8A	2.0A	2.0A	1.7A
24 VDC Current Supplied	0.5A	0.5A	0.5A	0.5A	0.5A
Auxiliary 24 VDC Output	100mA max	None	100mA max	100mA max	None
Run Relay	250VAC 4A (resistive load)	250VAC 4A (resistive load)	250VAC 4A (resistive load)	250VAC 4A (resistive load)	250VAC, 4A (resistive load)
Fuses	2A (250V)	4A (250V) User-replaceable D3-fuse-3 $$$	2A (250V)	2A (250V)	4A (250V) User-replaceable D3-fuse-3 $$$
Dimensions W/H/D	11.42x4.85x4.41 in. (290x123x112 mm)	11.42x4.85x4.41 in. (290x123x112 mm	15.55x4.85x4.41 in. (395x123x112 mm)	18.3x4.85x4.41 in. (465x123x112 mm)	18.34x4.85x4.41 in. (465x123x112 mm)
Weight	37oz. (1050g)	34oz. (964g)	44oz. (1250g)	51.1oz. (1450g)	50.5oz. (1432g)

www.automationdirect.com/dl305

POWER BUDGET

Managing your power resource

The I/O configuration depends on your choice of I/O modules, bases and I/O location. When determining the types and quantity of I/O modules you will be using, it's important to remember there is a limited amount of power available from the power supply.

The chart on the next page indicates the power supplied and used by each DL305 device. The adjacent chart shows an example of how to calculate the power used by your particular system. These two charts should make it easy for you to determine if the devices you have chosen fit within the power budget of your system configuration.

If the I/O you have chosen exceeds the maximum power available from the power supply, you can resolve the problem by shifting some of the modules to an expansion base.

WARNING: It is extremely important to calculate the power budget correctly. If you exceed the power budget, the system may operate in an unpredictable manner, which may result in a risk of personal injury or equipment damage.

Example: how to calculate your power usage

The following example shows how to calculate the power budget for the DL305 system. The examples are constructed around a single 5-slot base using the devices shown. It is recommended you construct a similar table for each base in your DL305 system.

1. Using a chart similar to the one below, fill in column 2.
2. Using the tables on the opposite page, enter the current supplied and used by each device (columns 3, 4, and 5). Devices which fall into the "Other" category (Row D) are devices such as the Handheld Programmer or a Data Communication Unit, which also have power requirements, but do not directly plug into the base.
3. Add the current used by the system devices (columns 3, 4, and 5), starting with Slot 1, then put the total in the row labeled "Maximum Current Required" (Row E).
4. Subtract the row labeled "Maximum Current Required" (Row E), from the row labeled "Current Supplied" (Row B). Place the difference in the row labeled "Remaining Current" (Row F).
5. If "Maximum Current Required" is greater than "Current Supplied" in columns 3, 4 or 5, the power budget will be exceeded. It will be unsafe to use this configuration and you will need to restructure your I/O configuration.

1-800-633-0405

Use *ZIP*Links to reduce power requirements

If your application requires a lot of relay outputs, consider using the *Zip*Link AC or DC relay output modules. These modules can switch high current (10A) loads without putting a load on your base power budget. Refer to the Connection Systems section of this desk reference to find out more about *ZIP*Link cables and connector modules.

This logo is placed next to I/O modules that are supported by the *ZIP*Link connection systems. See the I/O module specifications at the end of this section.

A	Column 1	Column 2	Column 3	Column 4	Column 5
	Base # 0	Device Type	5 VDC (mA)	9VDC (mA)	24V(mA)
B	*Current Supplied*				
	5-slot Base	D3-05BDC	1400	800	500
C	*Current Required*				
	CPU Slot	D3-330	300	50	0
	Slot 0	D3-16NE3	0	130	0
	Slot 1	D3-16NE3	0	130	0
	Slot 2	F3-16TA-1	0	160	0
	Slot 3	F3-16TA-1	0	160	0
D	*Other*				
	Handheld prog D3-HPP		50	50	0
E	*Maximum Current Required*		360	680	0
F	*Remaining Current*		1040	120	500

Power Requirements

This section shows the amount of power supplied by the base power supplies and the amount of power used by each DL305 device. Note the base power supplies provide three internal voltages (5V, 9V, 24V). The chart below shows how much power from each of these power sources is required for each DL305 device. Use this information when calculating the power budget for your system.

In addition to the three internal power sources, the DL305 bases provide an external power connection. There is 24 VDC available from the 24 VDC output terminals on the bases (except D3-05BDC and D3-10BDC).

The 24VDC can be used to power external devices or DL305 modules that require external 24VDC. The power used from this external 24VDC output reduces the internal system 24VDC that is available to the modules by an equal amount. When using the 24VDC output at the base terminal, it is recommended that 100mA not be exceeded.

Power Consumed				
Device	5V(mA)	9V(mA)	24V(mA)	Ext req.
CPUs				
D3-330	300	50	0	0
D3-330P	300	50	0	0
D3-340	300	20	0	0
D3-350	500	0	0	0
DC Inputs Modules				
D3-08ND2	0	10	112	0
D3-16ND2-1	0	25	224	0
D3-16ND2-2	0	24	209	0
D3-16ND2F	0	25	224	0
F3-16ND3F	0	148	68	0
AC Input Modules				
D3-08NA-1	0	10	0	0
D3-08NA-2	0	10	0	0
D3-16NA	0	100	0	0
AC/DC Input Modules				
D3-08NE3	0	10	0	0
D3-16NE3	0	130	0	0
DC Output Modules				
D3-04TD1	0	12	5	0
D3-08TD1	0	20	24	0
D3-08TD2	0	30	0	0
D3-16TD1-1	0	40	96	0
D3-16TD1-2	0	40	96	0
D3-16TD2	0	180	0	0
AC Output Modules				
D3-04TAS	0	12	0	0
F3-08TAS	0	80	0	0
D3-08TA-1	0	160	0	0
D3-08TA-2	0	160	0	0
F3-16TA-1	0	160	0	0
D3-16TA-2	0	400	0	0

Power Supplied				
Device	5V(mA)	9V(mA)	24V(mA)	24 V Auxiliary
D3-08B-1	900	2000	500	Yes
D3-08B-1	900	2000	500	Yes
D3-10B-1	900	2000	500	Yes
D3-05BDC	900	2000	500	Yes
D3-10BDC	900	2000	500	Yes
D3-05B-NR	900	2000	500	Yes
D3-08B-NR	900	2000	500	Yes
D3-10B-NR	900	2000	500	Yes
D3-05BDC-NR	900	2000	500	Yes
D3-08BDC-NR	900	2000	500	Yes
D3-10BDC-NR	900	2000	500	Yes

Power Consumed				
Device	5V(mA)	9V(mA)	24V(mA)	External required
Relay Output Modules				
D3-08TR	0	360	0	0
F3-08TRS-1	0	296	0	0
F3-08TRS-2	0	296	0	0
D3-08TRS-5	0	296	0	0
D3-16TR	0	480	0	0
Analog Temperature and Thermocouples Modules				
F3-04ADS	0	183	50	0
F3-08AD-1	0	45	55	0
F3-08THM-n	0	50	34	0
F3-16AD	0	33	47	0
D3-02DA	0	80	0	24VDC @170mAmax
F3-04DA-1	0	144	108	0
F3-04DAS	0	154	145	0
Communications and Networking				
D3-232 DCU	500	0	0	Optional 5V@500mA
D3-422 DCU	500	0	0	Optional 5V@500mA
FA-UNICON	0	0	0	24V or 5V@ 100mA
D3- DCM	0	300	0	0
ASCII BASIC Modules				
F3-AB128	0	90	0	0
F3-AB-128-T	0	205	0	0
F3-AB128-R	0	205	0	0
Specialty Modules				
D3-08SIM	0	10	112	0
D3-HSC	0	70	0	0
D3-PWU	800	0	0	Optional 5V@ 80mA
D3-TCSU	40	5	0	0
Programming				
D3-HP	50	50	0	0
D3-HPP	50	50	0	0
D2-HP	200	0	0	0
Specialty CPUs				
F3-OMUX-1	409	0	0	0
F3-OMUX-2	262	0	150	0
F3-PMUX	455	0	0	0
F3-RTU	416	0	0	0

www.automationdirect.com/dl305

DIMENSIONS AND INSTALLATION

It is important to understand the installation requirements for your DL305 system. This will help ensure that the DL305 products operate within their environmental and electrical limits.

Specification	Rating
Storage Temperature	-4°F - 158°F (-20°C to 70°C)
Ambient Operating Temperature	32°F - 131°F (0° to 55°C)
Ambient Humidity	30% - 95% relative humidity (non-condensing)
Vibration Resistance	MIL STD 810C, Method 514.2
Shock Resistance	MIL STD810, Method 516.2
Noise Immunity	NEMA (ICS3-304)

Plan for safety

This catalog should never be used as a replacement for the user manual. The user manuals, D3-USER-M and D3-350-M, contain important safety information that must be followed. The system installation should comply with all appropriate electrical codes and standards.

Base dimensions and mounting orientation

Use the diagrams to the right to make sure the DL305 system can be installed in your application. DL305 bases must be mounted horizontally to ensure proper airflow for cooling purposes. It is important to check these dimensions against the conditions required for your application. For example, it is recommended to leave 1.5" depth for ease of access and cable clearance. However, your distance may be greater or less. Also, check the installation guidelines for the recommended cabinet clearances.

DL305 mounting depth

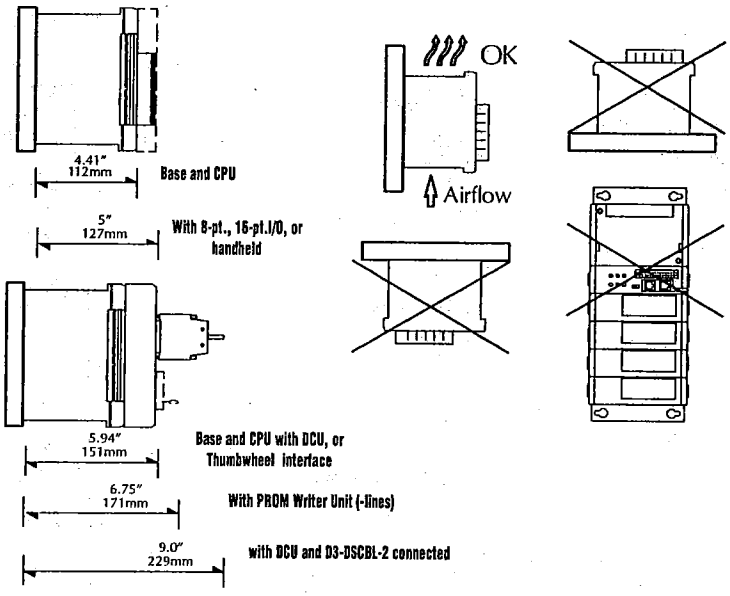

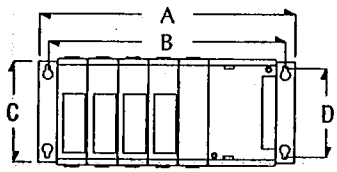

Base	Price	A		B		C		D	
D3-05B-1	$161.00	11.41"	290mm	10.63"	270mm	4.84"	123mm	3.54"	90mm
D3-08B-1	$214.00	15.55"	395mm	14.76"	375mm	4.84"	123mm	3.54	90mm
D3-10B-1	$261.00	18.30"	465mm	17.51"	445mm	4.84"	123mm	3.54	90mm

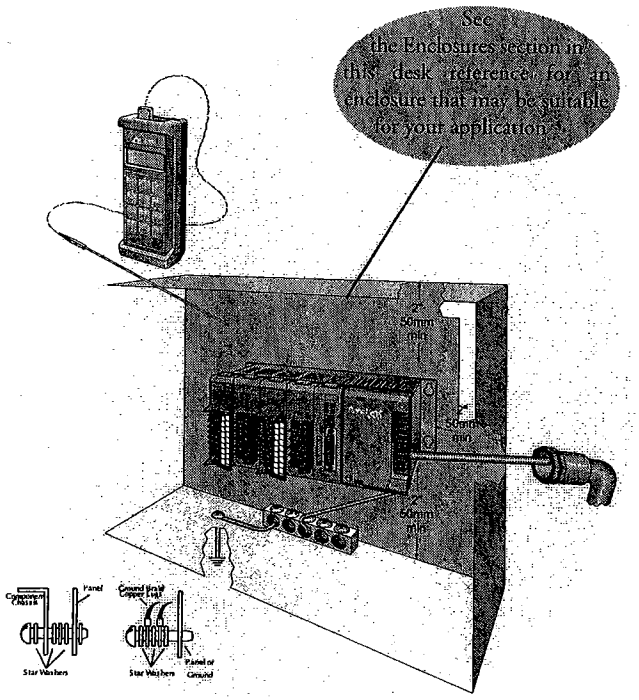

1-800-633-0405

CPU SPECIFICATIONS

DL305 CPU Specifications				
System Capacity	***D3-330***	***D3-330P***	***D3-340***	***D3-350***
Total memory (K words)	3.91	3.91	3.98	14.8
Ladder memory (K words)	3.7	3.7	3.7	7.6
User data memory	116 bytes	116 bytes	172 bytes	7.1K words
CMOS RAM	Yes	Yes	Yes	No
UVPROM	Opt.	Opt.	Opt.	No
EEPROM	No	No	Opt.	Flash
Total I/O points using:				
Local I/O	128	128	136	144
Local and Expansion I/O	176	176	184	368
Remote I/O[1]	N/A	N/A	N/A	512
I/O point density	8/16	8/16	8/16	8/16
Slots per base (CPU requires 1 slot)	5/8/10	5/8/10	5/8/10	5/8/10
Performance				
Contact execution (boolean)	6.6µs	28.4µs	.87µs	.61µs
Typical scan (1K boolean)[2]	15ms	20ms	4-5ms	1-2ms
Programming & Diagnostics				
RLL ladder style	Yes	Yes	Yes	Yes
RLL^{PLUS} (stage)	No	Yes	No	Yes
RunTime Editing	No	No	No	Yes
Variable/fixed scan	variable	variable	variable	either
Handheld programmer port	Yes	Yes	Yes	Yes
Built-in RS232C ports	No[3]	No[3]	2	2
Real-time clock/calendar	No	No	No	Yes
Instructions	61	65	63	129
Control relays(CR)	140	77	196	1024
Shift register bits	128	use CRs	128	use CRs
Stages (RLL^{PLUS} only)	N/A	128	N/A	1024
Timers/counters	64	64	64	256/128
Immediate I/O	No	No	No	Yes
Subroutines	No	No	No	Yes
For/Next Loops	No	No	No	Yes
Timed interrupt	No	No	No	Yes
Integer math	Yes	Yes	Yes	Yes
Floating point math	No	No	No	Yes
PID	No	No	No	Yes
Drum sequence	No	No	No	Yes
Bit of word	No	No	No	Yes
ASCII print	No	No	No	Yes
Data registers	128	128	192	7168
Internal diagnostics	Yes	Yes	Yes	Yes
Password security	Yes	Yes	Yes	Multi-level
Battery backup	Yes	Yes	Yes	Yes
Communications				
Built-in ports[3]	No	No	Yes	Yes
*Direct*NET master	No	No	Yes	Yes
*Direct*NET slave	w/DCU	w/DCU	Yes	Yes
MODBUS RTU master	No	No	No	Yes
MODBUS RTU slave	No	No	Yes	Yes
Data communications unit	Yes	Yes	N/A	N/A
Specialty modules				
ASCII BASIC	Yes	Yes	Yes	No
Phone/radio modem	Yes	Yes	Yes	No
Triple ports	Yes	Yes	Yes	No
Thermocouple	Yes	Yes	Yes	Yes
Analog input (#channels max.)	112	112	128	368
Analog output (#channels max.)	28	28	32	48
High-speed counter (10KHz)	Yes	Yes	Yes	No

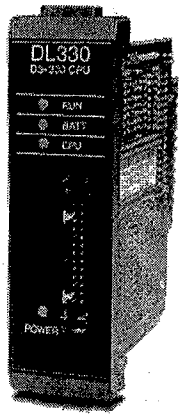

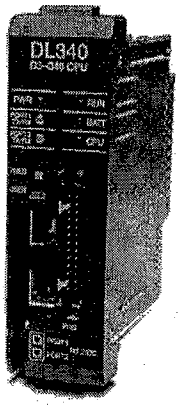

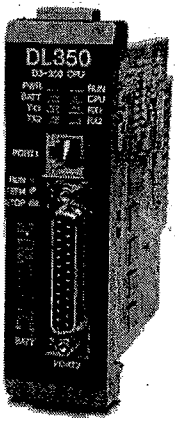

1. The D3-350 bottom port supports DL205 remote I/O.

2 1K program includes contacts, coils, and scan overhead. If you compare to other products, make sure to include their scan overhead.

3 Both D3-330 and D3-330P require a Data Communications Unit (DCU) for programming with DirectSOFT software.

www.automationdirect.com/dl305

D3-330(P) and D3-340 Key Features

D3-330 $227.00
D3-330P $249.00
D3-340 $343.00

The diagram to the right shows the various hardware features found on the D3-330, D3-330P and D3-340 CPUs.

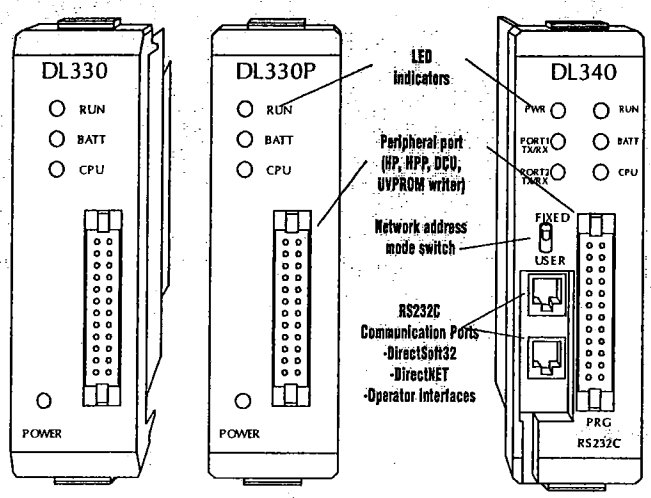

CPU Status Indicators		
RUN	ON	CPU is in RUN mode
	OFF	CPU is in Program mode
BATT	ON	Memory backup voltage low
	OFF	Memory backup voltage good
CPU	ON	CPU failure
	OFF	CPU is good
PWR (Power)	ON	CPU power good
	OFF	CPU power failure
Port1 RX/TX (D3-340)	RED	Flashing red indicates the CPU port is receiving data
	GREEN	Flashing green indicates the CPU port is sending data
Port2 RX/TX (D3-340	RED	Flashing red indicates the CPU port is receiving data
	Green	Flashing green indicates the CPU port is sending data

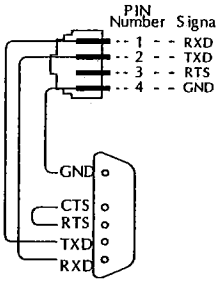

D3-340 RS232C Communication Port Specs	
Connector	RJ11(handset connector)
Network address	01 to 90
Baud rate	38400,19200,9600,4800, 2400,1200,600,300
Parity	None or odd
Transfer mode	HEX/ASCII Half-duplex Asynchronous
Data bits	8
Start bits	1
Stop bits	1
Turn around delay	0 to 1980 in 20ms intervals (preset with R777)

EEPROM and UVPROM chips

The DL305 CPUs come with on-board RAM and a battery. If you need additional program security, you may want to choose the EEPROM or UVPROM memory.

D3-CPU-UV $96.00

Optional UVPROM memory.
four chips per pack. Only one chip is required for the CPU. A
D3-PWU Prom Writer Unit is required for programming.

D3-340-EE $92.00

Optional EEPROM memory for the D3-340 only. Four chips per pack. Only one chip is required for the CPU. No extra programming device is necessary.

D3-D4-BAT $12.00

Spare battery (lithium 3.0V). Also used for D4-430 and D4-440 CPUs.

Hardware switches

Below is a side view of a D3-340 CPU that reveals several types of hardware switches.

D3-330 and D3-330P both have a 2-position dipswitch for selecting retentive memory and jumpers for selecting UVPROM and RAM options.

The D3-340 has a jumper switch for selecting UVPROM, EEPROM and RAM options, two rotary switches to select network addresses and an eight-position dipswitch for selecting baud rates (300 to 38.4K baud), communication mode (slave, master, MODBUS® RTU) and memory options.

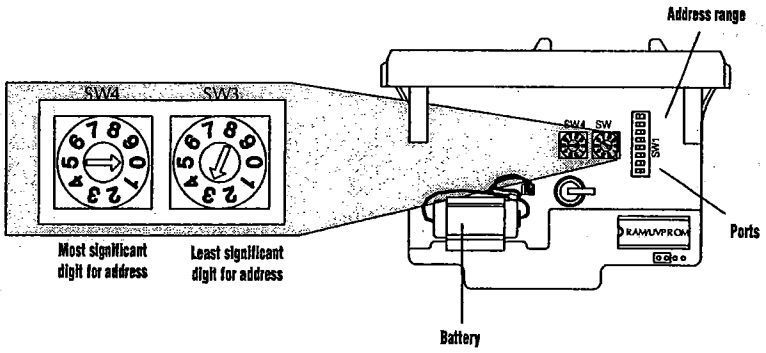

www.automationdirect.com/dl305

AC Input Modules

D3-08NA-1 AC Input $78.00	
Inputs per Module	8
Commons per Module	2 (isolated)
Input Voltage Range	85-132VAC
Input Voltage Supply	External
Peak Voltage	132VAC
AC Frequency	47-63Hz
ON Voltage Level	>80VAC
OFF Voltage Level	<20VAC
Input Impedance	10 K ohm
Input Current	15 mA @ 50Hz 18 mA @ 60Hz
Minimum ON Current	8mA
Maximum OFF Current	2mA
Base Power Required	9V 10mA max 24V N/A
OFF to ON Response	10-30ms
ON to OFF Response	10-60ms
Terminal Types	Non-removable
Status Indicators	Field side
Weight	5oz. (140g)

D3-08NA-2 AC Input $81.00	
Inputs per Module	8
Commons per Module	2 (isolated)
Input Voltage Range	180-265VAC
Input Voltage Supply	External
Peak Voltage	265 VAC
AC Frequency	50-60Hz
ON Voltage Level	>180VAC
OFF Voltage Level	<40VAC
Input Impedance	18Kohm
Input Current	13mA @ 50Hz 18mA @ 60Hz
Minimum ON Current	10mA
Maximum OFF Current	2mA
Base Power Required	9V 10mA max 24V N/A
OFF to ON Response	5-50ms
ON to OFF Response	5-60ms
Terminal Types	Non-removable
Status Indicators	Field side
Weight	5oz. (140g)

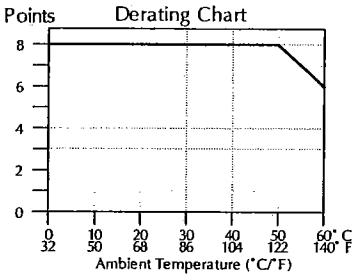

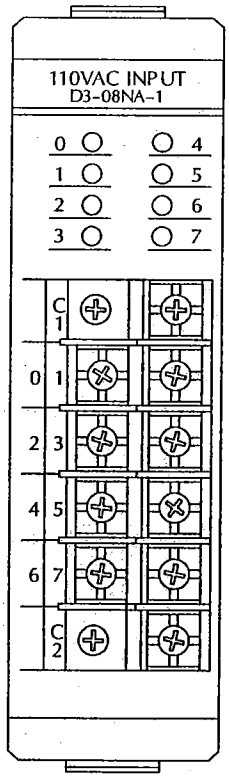

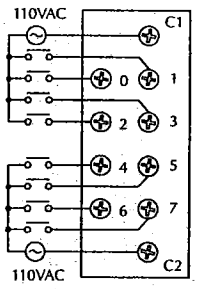

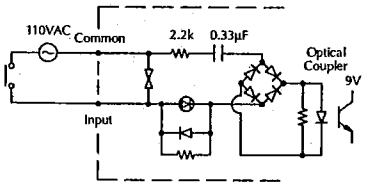

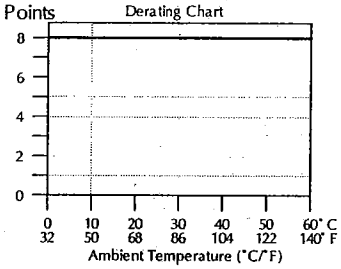

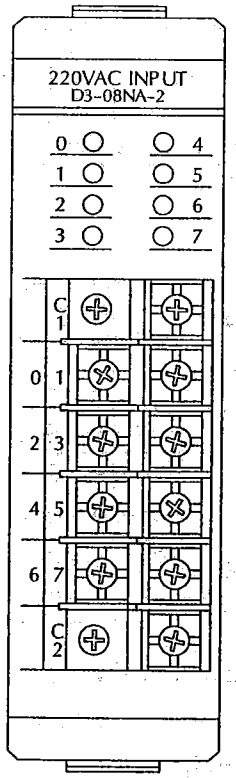

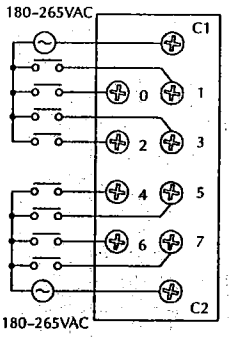

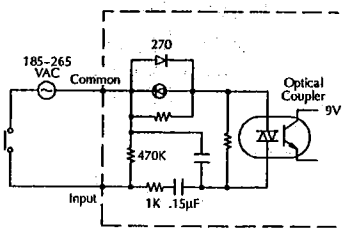

www.automationdirect.com/dl305

RELAY OUTPUT MODULES

D3-08TR Relay Output $67.00	
Outputs per Module	8
Commons per Module	2 (isolated)
Operating Voltage	5-265VAC 5-30VDC
Output Type	Form A (SPST)
Peak Voltage	265VAC/30VDC
AC Frequency	47-63Hz
ON Voltage Drop	N/A
Max. Current	4A/point AC 5A/point DC 6A/common
Max Leakage Current	1mA @ 220VAC
Max Inrush Current	5A
Minimum Load	5mA @ 5V
Base Power Required	9V 45mA/ON pt. (360 mA max) 24V N/A
OFF to ON Response	5ms
ON to OFF Response	5 ms
Terminal Type	Non-removable
Status Indicators	Logic side
Weight	7oz. (200g)
Fuses	2 (one 10A per common) Order D3-FUSE-5 (5 per pack) $$$

D3-16TR Relay Output $135.00	
Outputs per Module	16
Commons per Module	2 (isolated)
Operating Voltage	5-265VAC 5-30 VDC
Output Type	16 Form A (SPST)
Peak Voltage	265VAC/30VDC
AC Frequency	47-63Hz
ON Voltage Drop	N/A
Max. Current	2A/point AC/DC (resistive) 8A/common AC/DC
Max Leakage Current	0.1mA @ 220VAC
Max Inrush Current	2A
Minimum Load	5mA @ 5V
Base Power Required	9V 30mA/ON pt. (480 mA max) 24V N/A
OFF to ON Response	12ms
ON to OFF Response	12ms
Terminal Type	Removable
Status Indicators	Logic side
Weight	8.5oz. (248g)
Fuses	None

Typical Relay Life (Operations)

Voltage	Resistive	Solenoid	Closures
220VAC	4A	0.5A	100k
220VAC		0.05A	800k
110VAC	4A	0.5A	100k
110VAC		0.1A	650k
24VDC	5A	0.5A	100k

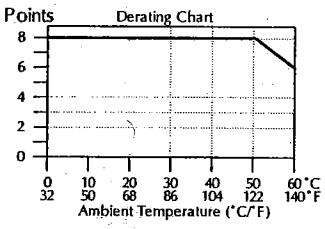

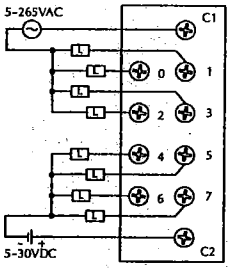

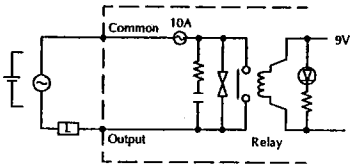

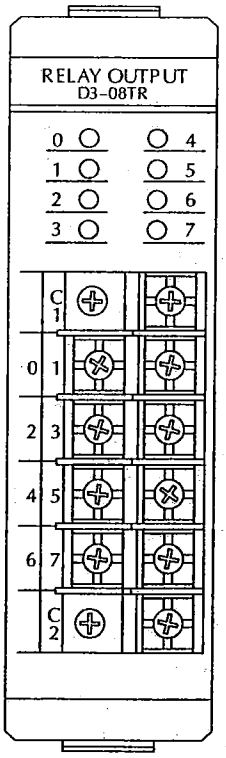

Typical Relay Life (Operations)

Voltage	Resistive	Solenoid	Closures
220VAC	2A	0.25A	100k
220VAC		0.03A	800k
110VAC	2A	0.25A	100k
110VAC		0.05A	650k
24VDC	2A	0.25A	100k

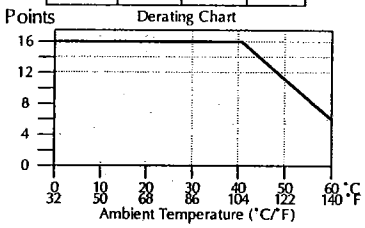

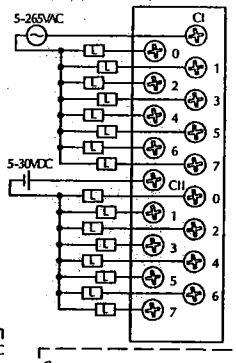

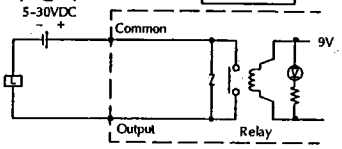

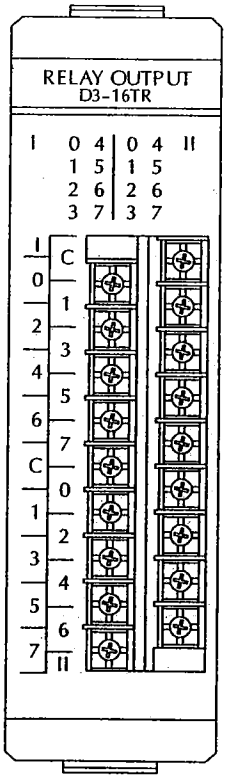

1-800-633-0405

DC OUTPUT MODULES

D3-04TD1 DC Output $55.00	
Outputs per Module	4 (current sinking)
Commons per Module	4 (internally connected)
Operating Voltage	5-24VDC
Output Type	Field effect transistor
Peak Voltage	45VDC
AC Frequency	N/A
ON Voltage Drop	0.9V @ 6A
Max. Current	2A/point 6A/module
Max Leakage Current	0.4mA @ 40VDC
Max Inrush Current	6A/100ms
Minimum Load	5mA
Base Power Required	9V 12mA/pt (48mA Max) 24V 5mA
OFF to ON Response	0.1ms
ON to OFF Response	0.1ms
Terminal Type	Non-removable
Status Indicators	Logic side
Weight	4.2oz. (120g)
Fuses	4 (one 5A per common) user replaceable

D3-08TD1 DC Output $57.00	
Outputs per Module	8 (current sinking)
Commons per Module	2 (internally connected)
Operating Voltage	5-24VDC
Output Type	NPN (open collector)
Peak Voltage	45VDC
AC Frequency	N/A
ON Voltage Drop	0.8V @ 0.5A
Max. Current	0.5A/point 1.8/common
Max Leakage Current	0.1mA @ 40VDC
Max Inrush Current	3A/20ms 1A/100ms
Minimum Load	1mA
Base Power Required	9V 20mA max 24V 3mA/pt (24mA Max)
OFF to ON Response	0.1ms
ON to OFF Response	0.1ms
Terminal Type	Non removable
Status Indicators	Logic side
Weight	4.2oz. (120g)
Fuses	2 (one 3A per common) non-replaceable

1-800-633-0405

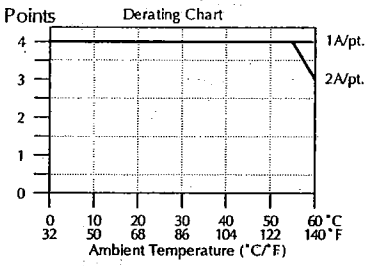

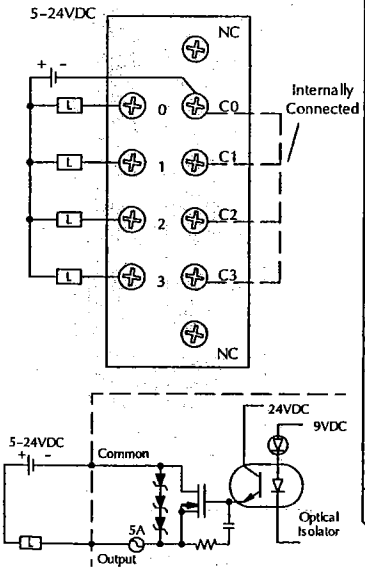

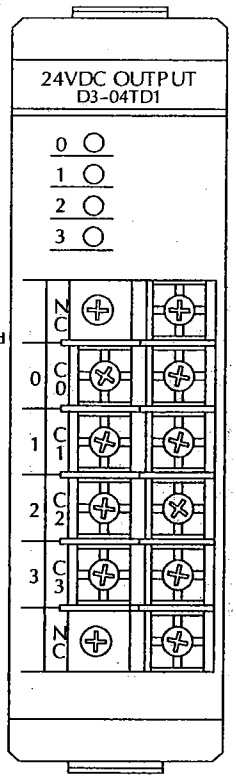

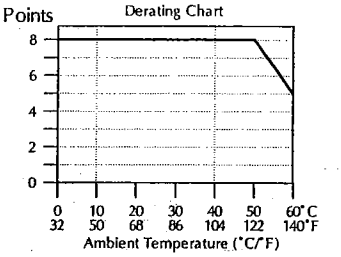

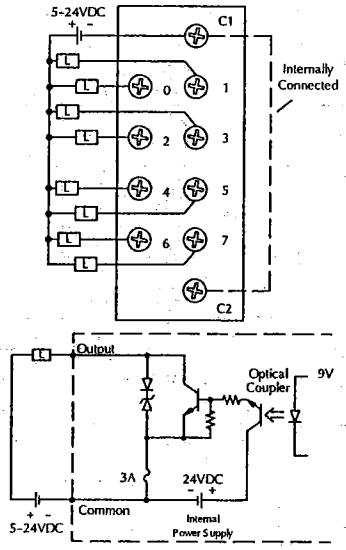

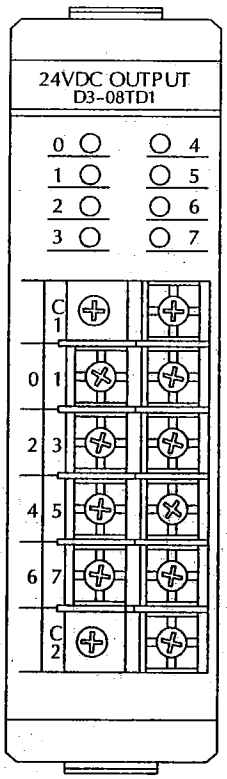

ANALOG INPUT MODULES

F3-08AD-1 8-Channel Analog Input $292.00 (Replaces F3-08AD)	
Number of Channels	8, single ended (one common)
Input Ranges	4-20mA
Resolution	12 bit (1 in 4096)
Low Pass Filter	-3db @ 200Hz (-6db/octave)
Input Impedance	250ohm ± 0.1%, 1/2W current input
Absolute Maximum Ratings	±40mA
Conversion Time	1 channel per CPU scan
Converter Type	Successive approximation, MAX170
Linearity Error	± 1 count (0.03% of full scale) maximum
Input Stability	±0.05 count
Maximum Inaccuracy	0.1% of full scale at 77°I (25°C)
Accuracy vs. Temperature	57ppm/°C maximum full scale (including maximum offset change of 2 counts)

Recommended Fuse	0.032A, Series 217 fast-acting
Power Budget Requirement	45mA @9 VDC, 55mA @ 24VDC
External Power Supply	None required
Operating Temperature	32° to 140°F (0° to 60°C)
Storage Temperature	-4° to 158°F (-20° to 70°C)
Relative Humidity	5 to 95% (non-condensing)
Environmental air	No corrosive gases permitted
Vibration	MIL STD 810C 514.2
Shock	MIL STD 810C 516.2
Noise Immunity	NEMA ICS3-304

Note 1: Terminate all shields at their respective signal source.

Note 2: To avoid "ground loop" errors, the following transmitter types are recommended:
2 and 3 wire: Isolation between input signal and P/S
4 wire: Full isolation between input signal, P/S and output signal.

Note 3: A Series 217 0.032A fast-acting fuse is recommended for 4-20mA applications.

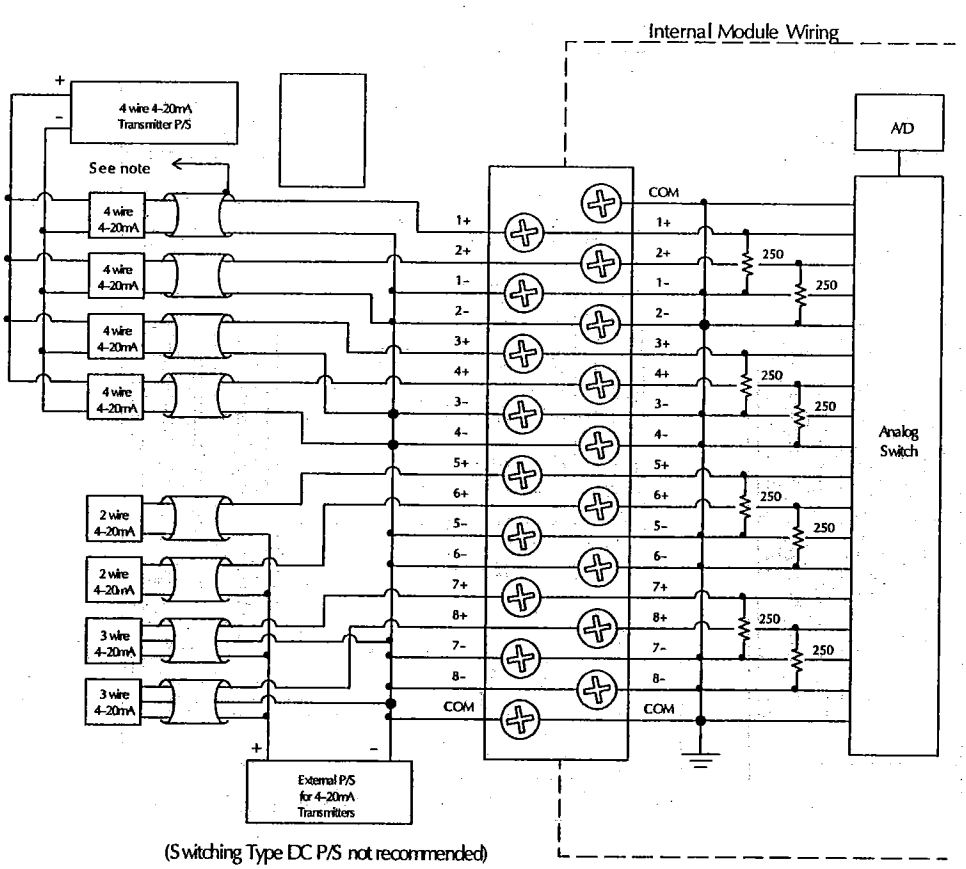

(Switching Type DC P/S not recommended)

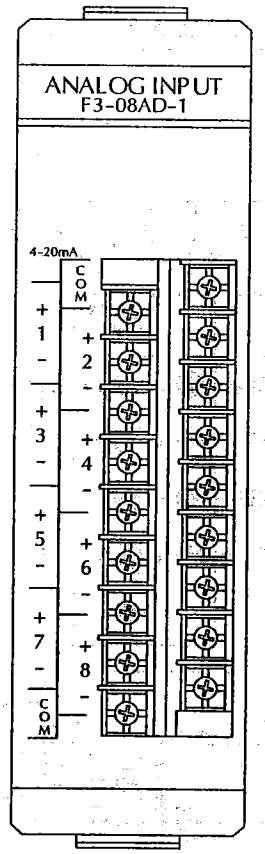

www.automationdirect.com/dl305

Analog Output Modules

D3-02DA 2-Channel Analog Output $205.00	
Number of Channels	2 (independent)
Output Ranges	0 - 10V, 4-20mA
Channels Individually Configured	Yes. Use different terminals for voltage and current.
Resolution	8-bit (1 in 256)
Output Type	Single ended
Output Impedance	0.5ohm maximum, voltage output
Output Current	10mA minimum, voltage output @ 10VDC
Load Impedance	550ohm max. 5ohm min., current output
Total Inaccuracy	±0.4% maximum at 25°C
Accuracy vs. Temperature	±50ppm/°C maximum

Conversion Time	100µs maximum(2 channels/scan)
Power Budget Requirement	80mA @ 9V
External Power Supply	24VDC, ±10%, 170mA, class 2
Operating Temperature	32° to 140°F (0° to 60°C)
Storage Temperature	-4° to 158°F (-20° to 70°C)
Relative Humidity	5 to 95% (non-condensing)
Environmental Air	No corrosive gases permitted
Vibration	MIL STD 810C 514.2
Shock	MIL STD 810C 516.2
Noise Immunity	NEMA ICS3-304

1-800-633-0405

Note 1: Shields should be connected to the 0V of the module or to the 0V of the P/S.

Note 2: Unused voltage and current outputs should remain open (no connections).

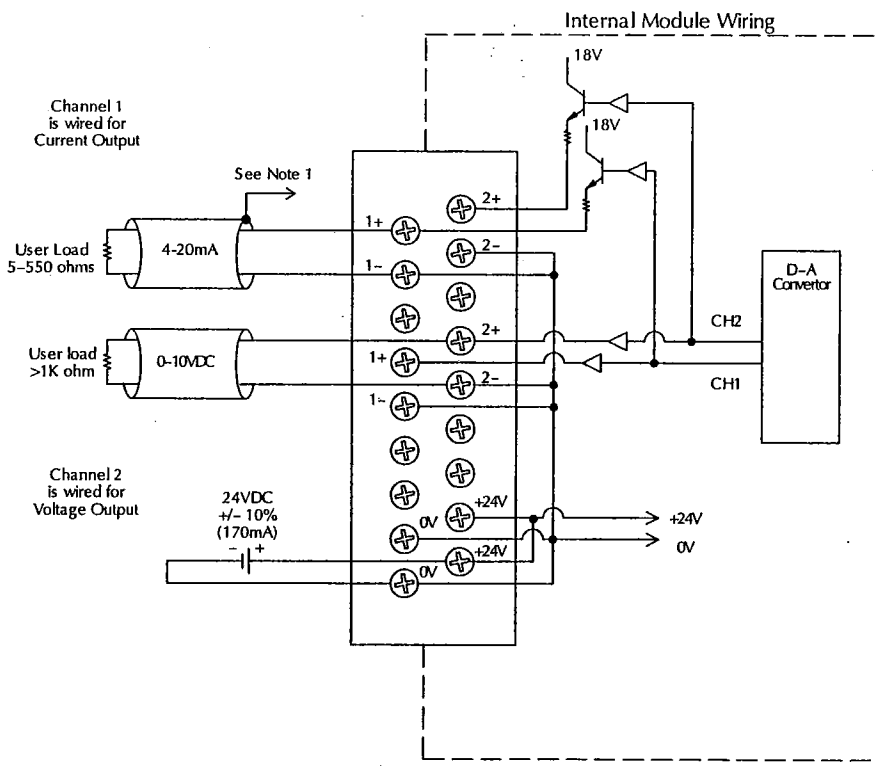

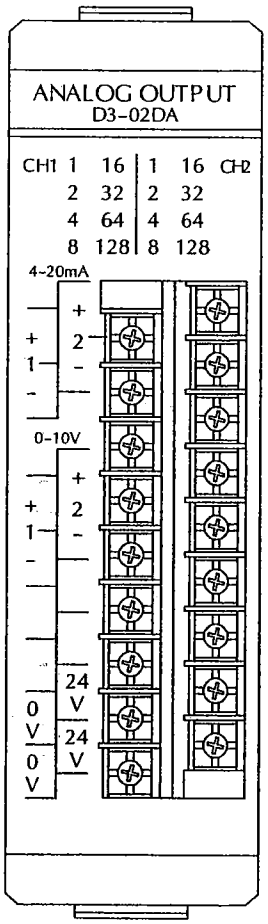

BASE SPECIFICATIONS

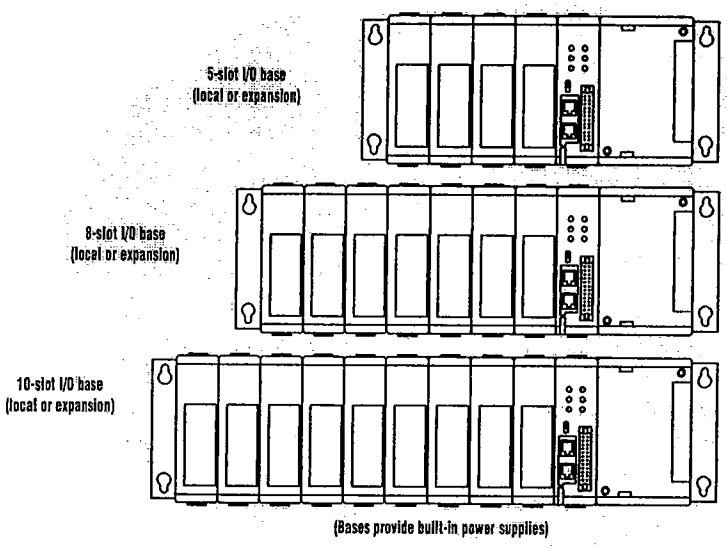

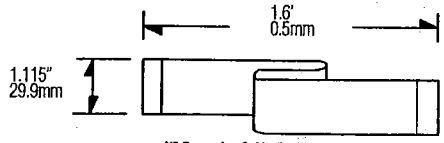

I/O Expansion Cable (D3-EXCBL)

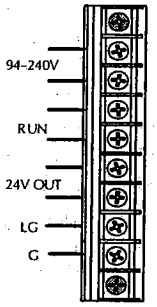

94-240 VAC Terminal Strip

	D3-05B-1 $161.00	D3-05BDC $178.00	D3-08B-1 $214.00	D3-10B-1 $261.00	D3-10BDC $269.00
Number of Slots	5	5	8	10	10
Local CPU Base	Yes	Yes	Yes	Yes	Yes
Expansion Base	Yes CPU base and two expansion bases. If CPU base is 5-slot, then the expansion bases must be 5-slot also.	Yes CPU base and two expansion bases. If CPU base is 5-slot, then the expansion bases must be 5-slot also.	Yes (D3-350 only) CPU base and two expansion bases. If CPU base is 8-slot, then the expansion bases must be 8-slot or 5-slot	Yes CPU base and one expansion bases. If CPU base is 10-slot, then the expansion bases must be 10-slot or 5-slot	Yes CPU base and one expansion bases. If CPU base is 10-slot, then the expansion bases must be 10-slot or 5-slot.
Input Voltage Range	85-264VAC 47-63Hz	20.5-30VDC <10% ripple	85-264VAC 47-63Hz	85-264VAC 47-63Hz	20.5-30VDC <10% ripple
Base Power Consumption	85 VA Max	48 Watts	85VA Max	85VA Max	65 Watts
Inrush Current Max.	30A 1ms	30A	30A 1ms	30A 1ms	30A
Dielectric Strength	1500VAC for one minute between terminals of AC P/S, run output, common, 24VDC	1500VAC for one minute between 24VDC input terminals and run output	1500VAC for one minute between terminals of AC P/S, run output, common, 24VDC	2000VAC for one minute between terminals of AC P/S, run output, common, 24VDC	1500VAC for one minute between 24VDC input terminals and run output
Insulation Resistance	>10Mohm at 500VDC	>10Mohm at 500VDC	>10Mohm at 500VDC	>10Mohm at 500VDC	>10Mohm at 500VDC
Power Supply Output (Voltage Ranges and Ripple)	(5VDC) 4.75-5.25V 5% ripple (9VDC) 8.5-10V 5% ripple (24VDC) 20-28V 5% ripple	(5VDC) 4.75-5.25V 5% ripple (9VDC) 8.5-10V 5% ripple (24VDC) 20-28V 5% ripple	(5VDC) 4.75-5.25V 5% ripple (9VDC) 8.5-10V 5% ripple (24VDC) 20-28V 5% ripple	(5VDC) 4.75-5.25V 5% ripple (9VDC) 8.5-10V 5% ripple (24VDC) 20-28V 5% ripple	(5VDC) 4.75-5.25V 5% ripple (9VDC) 8.5-10V 5% ripple (24VDC) 20-28V 5% ripple
5 VDC Current Supplied	.7A	1.4A	1.0A	1.0A	1.4A
9VDC Current Supplied	2.0A	0.8A	2.0A	2.0A	1.7A
24 VDC Current Supplied	0.5A	0.5A	0.5A	0.5A	0.5A
Auxiliary 24 VDC Output	100mA max	None	100mA max	100mA max	None
Run Relay	250VAC 4A (resistive load)	250VAC 4A (resistive load)	250VAC 4A (resistive load)	250VAC 4A (resistive load)	250VAC, 4A (resistive load)
Fuses	2A (250V)	4A (250V) User-replaceable D3-fuse-3 $$$	2A (250V)	2A (250V)	4A (250V) User-replaceable D3-fuse-3 $$$
Dimensions W/H/D	11.42x4.85x4.41 in. (290x123x112 mm)	11.42x4.85x4.41 in. (290x123x112 mm	15.55x4.85x4.41 in. (395x123x112 mm)	18.3x4.85x4.41 in. (465x123x112 mm)	18.34x4.85x4.41 in. (465x123x112 mm)
Weight	37oz. (1050g)	34oz. (964g)	44oz. (1250g)	51.1oz. (1450g)	50.5oz. (1432g)

www.automationdirect.com/dl305

POWER BUDGET

Managing your power resource

The I/O configuration depends on your choice of I/O modules, bases and I/O location. When determining the types and quantity of I/O modules you will be using, it's important to remember there is a limited amount of power available from the power supply.

The chart on the next page indicates the power supplied and used by each DL305 device. The adjacent chart shows an example of how to calculate the power used by your particular system. These two charts should make it easy for you to determine if the devices you have chosen fit within the power budget of your system configuration.

If the I/O you have chosen exceeds the maximum power available from the power supply, you can resolve the problem by shifting some of the modules to an expansion base.

WARNING: It is extremely important to calculate the power budget correctly. If you exceed the power budget, the system may operate in an unpredictable manner, which may result in a risk of personal injury or equipment damage.

Example: how to calculate your power usage

The following example shows how to calculate the power budget for the DL305 system. The examples are constructed around a single 5-slot base using the devices shown. It is recommended you construct a similar table for each base in your DL305 system.

1. Using a chart similar to the one below, fill in column 2.
2. Using the tables on the opposite page, enter the current supplied and used by each device (columns 3, 4, and 5). Devices which fall into the "Other" category (Row D) are devices such as the Handheld Programmer or a Data Communication Unit, which also have power requirements, but do not directly plug into the base.
3. Add the current used by the system devices (columns 3, 4, and 5), starting with Slot 1, then put the total in the row labeled "Maximum Current Required" (Row E).
4. Subtract the row labeled "Maximum Current Required" (Row E), from the row labeled "Current Supplied" (Row B). Place the difference in the row labeled "Remaining Current" (Row F).
5. If "Maximum Current Required" is greater than "Current Supplied" in columns 3, 4 or 5, the power budget will be exceeded. It will be unsafe to use this configuration and you will need to restructure your I/O configuration.

A	Column 1	Column 2	Column 3	Column 4	Column 5
	Base # 0	Device Type	5 VDC (mA)	9VDC (mA)	24V(mA)
B	*Current Supplied*				
	5-slot Base	D3-05BDC	1400	800	500
C	*Current Required*				
	CPU Slot	D3-330	300	50	0
	Slot 0	D3-16NE3	0	130	0
	Slot 1	D3-16NE3	0	130	0
	Slot 2	F3-16TA-1	0	160	0
	Slot 3	F3-16TA-1	0	160	0
D	*Other*				
	Handheld prog D3-HPP		50	50	0
E	*Maximum Current Required*		360	680	0
F	*Remaining Current*		1040	120	500

Use *ZIP*Links to reduce power requirements

If your application requires a lot of relay outputs, consider using the *Zip*Link AC or DC relay output modules. These modules can switch high current (10A) loads without putting a load on your base power budget. Refer to the Connection Systems section of this desk reference to find out more about *ZIP*Link cables and connector modules.

This logo is placed next to I/O modules that are supported by the *ZIP*Link connection systems. See the I/O module specifications at the end of this section.

1-800-633-0405

Power Requirements

This section shows the amount of power supplied by the base power supplies and the amount of power used by each DL305 device. Note the base power supplies provide three internal voltages (5V, 9V, 24V). The chart below shows how much power from each of these power sources is required for each DL305 device. Use this information when calculating the power budget for your system.

In addition to the three internal power sources, the DL305 bases provide an external power connection. There is 24 VDC available from the 24 VDC output terminals on the bases (except D3-05BDC and D3-10BDC).

The 24VDC can be used to power external devices or DL305 modules that require external 24VDC. The power used from this external 24VDC output reduces the internal system 24VDC that is available to the modules by an equal amount. When using the 24VDC output at the base terminal, it is recommended that 100mA not be exceeded.

Power Consumed

Device	5V(mA)	9V(mA)	24V(mA)	Ext. req.
CPUs				
D3-330	300	50	0	0
D3-330P	300	50	0	0
D3-340	300	20	0	0
D3-350	500	0	0	0
DC Inputs Modules				
D3-08ND2	0	10	112	0
D3-16ND2-1	0	25	224	0
D3-16ND2-2	0	24	209	0
D3-16ND2F	0	25	224	0
F3-16ND3F	0	148	68	0
AC Input Modules				
D3-08NA-1	0	10	0	0
D3-08NA-2	0	10	0	0
D3-16NA	0	100	0	0
AC/DC Input Modules				
D3-08NE3	0	10	0	0
D3-16NE3	0	130	0	0
DC Output Modules				
D3-04TD1	0	12	5	0
D3-08TD1	0	20	24	0
D3-08TD2	0	30	0	0
D3-16TD1-1	0	40	96	0
D3-16TD1-2	0	40	96	0
D3-16TD2	0	180	0	0
AC Output Modules				
D3-04TAS	0	12	0	0
F3-08TAS	0	80	0	0
D3-08TA-1	0	160	0	0
D3-08TA-2	0	160	0	0
F3-16TA-1	0	160	0	0
D3-16TA-2	0	400	0	0

Power Supplied

Device	5V(mA)	9V(mA)	24V(mA)	24 V Auxiliary
D3-08B-1	900	2000	500	Yes
D3-08B-1	900	2000	500	Yes
D3-10B-1	900	2000	500	Yes
D3-05BDC	900	2000	500	Yes
D3-10BDC	900	2000	500	Yes
D3-05B-NR	900	2000	500	Yes
D3-08B-NR	900	2000	500	Yes
D3-10B-NR	900	2000	500	Yes
D3-05BDC-NR	900	2000	500	Yes
D3-08BDC-NR	900	2000	500	Yes
D3-10BDC-NR	900	2000	500	Yes

Power Consumed

Device	5V(mA)	9V(mA)	24V(mA)	External required
Relay Output Modules				
D3-08TR	0	360	0	0
F3-08TRS-1	0	296	0	0
F3-08TRS-2	0	296	0	0
D3-08TRS-5	0	296	0	0
D3-16TR	0	480	0	0
Analog Temperature and Thermocouples Modules				
F3-04ADS	0	183	50	0
F3-08AD-1	0	45	55	0
F3-08THM-n	0	50	34	0
F3-16AD	0	33	47	0
D3-02DA	0	80	0	24VDC @170mAmax
F3-04DA-1	0	144	108	0
F3-04DAS	0	154	145	0
Communications and Networking				
D3-232 DCU	500	0	0	Optional 5V@500mA
D3-422 DCU	500	0	0	Optional 5V@500mA
FA-UNICON	0	0	0	24V or 5V@ 100mA
D3- DCM	0	300	0	0
ASCII BASIC Modules				
F3-AB128	0	90	0	0
F3-AB-128-T	0	205	0	0
F3-AB128-R	0	205	0	0
Specialty Modules				
D3-08SIM	0	10	112	0
D3-HSC	0	70	0	0
D3-PWU	800	0	0	Optional 5V@ 80mA
D3-TCSU	40	5	0	0
Programming				
D3-HP	50	50	0	0
D3-HPP	50	50	0	0
D2-HP	200	0	0	0
Specialty CPUs				
F3-OMUX-1	409	0	0	0
F3-OMUX-2	262	0	150	0
F3-PMUX	455	0	0	0
F3-RTU	416	0	0	0

www.automationdirect.com/dl305

DIMENSIONS AND INSTALLATION

It is important to understand the installation requirements for your DL305 system. This will help ensure that the DL305 products operate within their environmental and electrical limits.

Specification	Rating
Storage Temperature	-4°F - 158°F (-20°C to 70°C)
Ambient Operating Temperature	32°F - 131°F (0° to 55°C)
Ambient Humidity	30% - 95% relative humidity (non-condensing)
Vibration Resistance	MIL STD 810C, Method 514.2
Shock Resistance	MIL STD810, Method 516.2
Noise Immunity	NEMA (ICS3-304)

Plan for safety

This catalog should never be used as a replacement for the user manual. The user manuals, D3-USER-M and D3-350-M, contain important safety information that must be followed. The system installation should comply with all appropriate electrical codes and standards.

Base dimensions and mounting orientation

Use the diagrams to the right to make sure the DL305 system can be installed in your application. DL305 bases must be mounted horizontally to ensure proper airflow for cooling purposes. It is important to check these dimensions against the conditions required for your application. For example, it is recommended to leave 1.5" depth for ease of access and cable clearance. However, your distance may be greater or less. Also, check the installation guidelines for the recommended cabinet clearances.

DL305 mounting depth

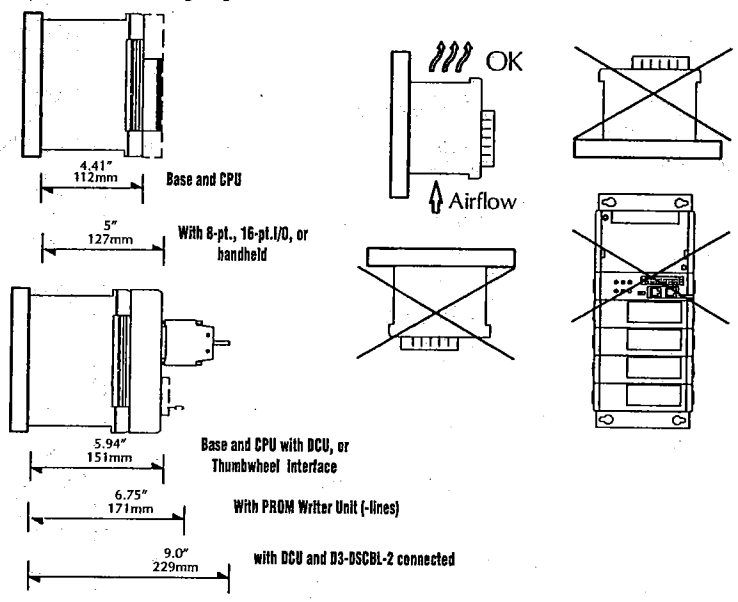

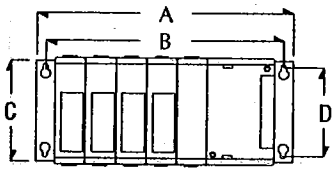

Base	Price	A		B		C		D	
D3-05B-1	$161.00	11.41"	290mm	10.63"	270mm	4.84"	123mm	3.54"	90mm
D3-08B-1	$214.00	15.55"	395mm	14.76"	375mm	4.84"	123mm	3.54	90mm
D3-10B-1	$261.00	18.30"	465mm	17.51"	445mm	4.84"	123mm	3.54	90mm

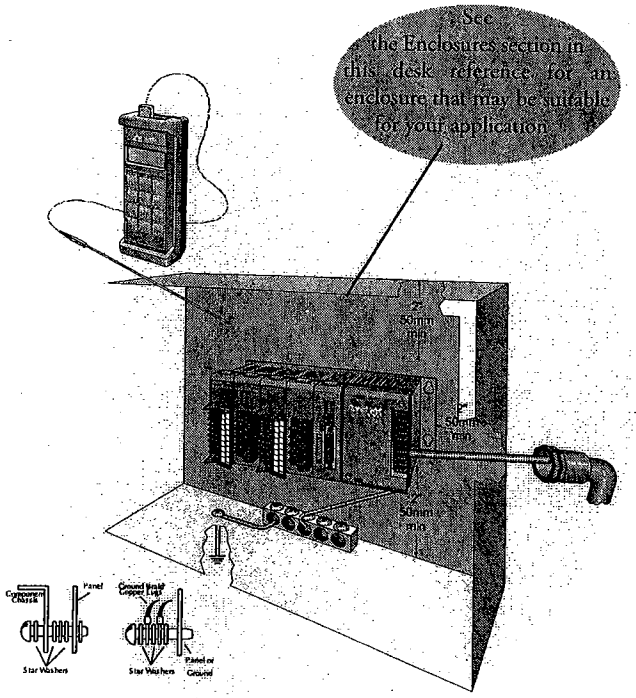

1-800-633-0405

CPU SPECIFICATIONS

DL305 CPU Specifications				
System Capacity	***D3-330***	***D3-330P***	***D3-340***	***D3-350***
Total memory (K words)	3.91	3.91	3.98	14.8
Ladder memory (K words)	3.7	3.7	3.7	7.6
User data memory	116 bytes	116 bytes	172 bytes	7.1K words
CMOS RAM	Yes	Yes	Yes	No
UVPROM	Opt.	Opt.	Opt.	No
EEPROM	No	No	Opt.	Flash
Total I/O points using:				
Local I/O	128	128	136	144
Local and Expansion I/O	176	176	184	368
Remote I/O[1]	N/A	N/A	N/A	512
I/O point density	8/16	8/16	8/16	8/16
Slots per base (CPU requires 1 slot)	5/8/10	5/8/10	5/8/10	5/8/10
Performance				
Contact execution (boolean)	6.6µs	28.4µs	.87µs	.61µs
Typical scan (1K boolean)[2]	15ms	20ms	4-5ms	1-2ms
Programming & Diagnostics				
RLL ladder style	Yes	Yes	Yes	Yes
RLL[PLUS] (stage)	No	Yes	No	Yes
RunTime Editing	No	No	No	Yes
Variable/fixed scan	variable	variable	variable	either
Handheld programmer port	Yes	Yes	Yes	Yes
Built-in RS232C ports	No[3]	No[3]	2	2
Real-time clock/calendar	No	No	No	Yes
Instructions	61	65	63	129
Control relays(CR)	140	77	196	1024
Shift register bits	128	use CRs	128	use CRs
Stages (RLL[PLUS] only)	N/A	128	N/A	1024
Timers/counters	64	64	64	256/128
Immediate I/O	No	No	No	Yes
Subroutines	No	No	No	Yes
For/Next Loops	No	No	No	Yes
Timed interrupt	No	No	No	Yes
Integer math	Yes	Yes	Yes	Yes
Floating point math	No	No	No	Yes
PID	No	No	No	Yes
Drum sequence	No	No	No	Yes
Bit of word	No	No	No	Yes
ASCII print	No	No	No	Yes
Data registers	128	128	192	7168
Internal diagnostics	Yes	Yes	Yes	Yes
Password security	Yes	Yes	Yes	Multi-level
Battery backup	Yes	Yes	Yes	Yes
Communications				
Built-in ports[3]	No	No	Yes	Yes
*Direct*NET master	No	No	Yes	Yes
*Direct*NET slave	w/DCU	w/DCU	Yes	Yes
MODBUS RTU master	No	No	No	Yes
MODBUS RTU slave	No	No	Yes	Yes
Data communications unit	Yes	Yes	N/A	N/A
Specialty modules				
ASCII BASIC	Yes	Yes	Yes	No
Phone/radio modem	Yes	Yes	Yes	No
Triple ports	Yes	Yes	Yes	No
Thermocouple	Yes	Yes	Yes	Yes
Analog input (#channels max.)	112	112	128	368
Analog output (#channels max.)	28	28	32	48
High-speed counter (10KHz)	Yes	Yes	Yes	No

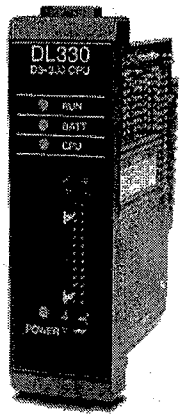

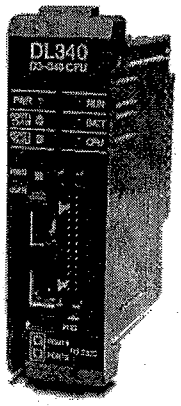

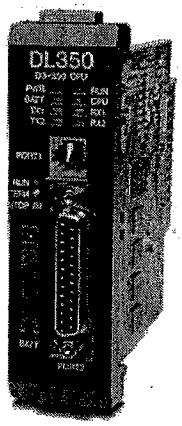

1. The D3-350 bottom port supports DL205 remote I/O.

2 1K program includes contacts, coils, and scan overhead. If you compare to other products, make sure to include their scan overhead.

3 Both D3-330 and D3-330P require a Data Communications Unit (DCU) for programming with DirectSOFT software.

www.automationdirect.com/dl305

D3-330(P) AND D3-340 KEY FEATURES

D3-330 $227.00
D3-330P $249.00
D3-340 $343.00

The diagram to the right shows the various hardware features found on the D3-330, D3-330P and D3-340 CPUs.

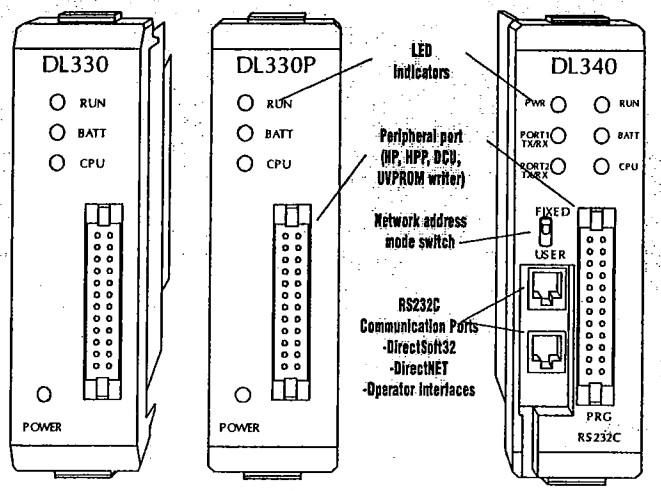

CPU Status Indicators		
RUN	ON	CPU is in RUN mode
	OFF	CPU is in Program mode
BATT	ON	Memory backup voltage low
	OFF	Memory backup voltage good
CPU	ON	CPU failure
	OFF	CPU is good
PWR (Power)	ON	CPU power good
	OFF	CPU power failure
Port1 RX/TX (D3-340)	RED	Flashing red indicates the CPU port is receiving data
	GREEN	Flashing green indicates the CPU port is sending data
Port2 RX/TX (D3-340	RED	Flashing red indicates the CPU port is receiving data
	Green	Flashing green indicates the CPU port is sending data

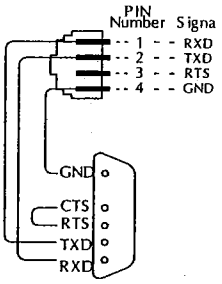

D3-340 RS232C Communication Port Specs	
Connector	RJ11(handset connector)
Network address	01 to 90
Baud rate	38400,19200,9600,4800, 2400,1200,600,300
Parity	None or odd
Transfer mode	HEX/ASCII Half-duplex Asynchronous
Data bits	8
Start bits	1
Stop bits	1
Turn around delay	0 to 1980 in 20ms intervals (preset with R777)

EEPROM and UVPROM chips

The DL305 CPUs come with on-board RAM and a battery. If you need additional program security, you may want to choose the EEPROM or UVPROM memory.

D3-CPU-UV $96.00

Optional UVPROM memory.
four chips per pack. Only one chip is required for the CPU. A
D3-PWU Prom Writer Unit is required for programming.

D3-340-EE $92.00

Optional EEPROM memory for the D3-340 only. Four chips per pack. Only one chip is required for the CPU. No extra programming device is necessary.

D3-D4-BAT $12.00

Spare battery (lithium 3.0V). Also used for D4-430 and D4-440 CPUs.

Hardware switches

Below is a side view of a D3-340 CPU that reveals several types of hardware switches.

D3-330 and D3-330P both have a 2-position dipswitch for selecting retentive memory and jumpers for selecting UVPROM and RAM options.

The D3-340 has a jumper switch for selecting UVPROM, EEPROM and RAM options, two rotary switches to select network addresses and an eight-position dipswitch for selecting baud rates (300 to 38.4K baud), communication mode (slave, master, MODBUS® RTU) and memory options.

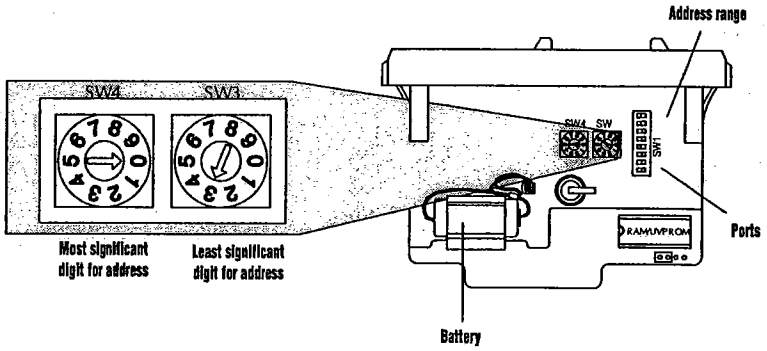

www.automationdirect.com/dl305

AC Input Modules

D3-08NA-1 AC Input $78.00	
Inputs per Module	8
Commons per Module	2 (isolated)
Input Voltage Range	85-132VAC
Input Voltage Supply	External
Peak Voltage	132VAC
AC Frequency	47-63Hz
ON Voltage Level	>80VAC
OFF Voltage Level	<20VAC
Input Impedance	10 K ohm
Input Current	15 mA @ 50Hz 18 mA @ 60Hz
Minimum ON Current	8mA
Maximum OFF Current	2mA
Base Power Required	9V 10mA max 24V N/A
OFF to ON Response	10-30ms
ON to OFF Response	10-60ms
Terminal Types	Non-removable
Status Indicators	Field side
Weight	5oz. (140g)

D3-08NA-2 AC Input $81.00	
Inputs per Module	8
Commons per Module	2 (isolated)
Input Voltage Range	180-265VAC
Input Voltage Supply	External
Peak Voltage	265 VAC
AC Frequency	50-60Hz
ON Voltage Level	>180VAC
OFF Voltage Level	<40VAC
Input Impedance	18Kohm
Input Current	13mA @ 50Hz 18mA @ 60Hz
Minimum ON Current	10mA
Maximum OFF Current	2mA
Base Power Required	9V 10mA max 24V N/A
OFF to ON Response	5-50ms
ON to OFF Response	5-60ms
Terminal Types	Non-removable
Status Indicators	Field side
Weight	5oz. (140g)

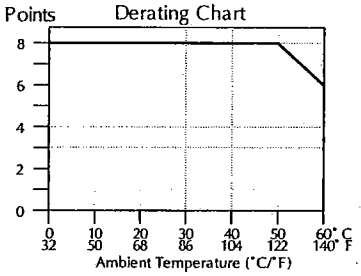

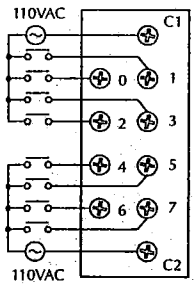

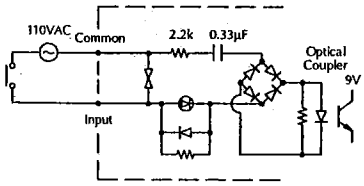

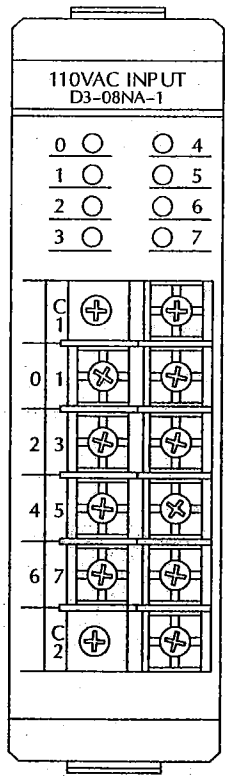

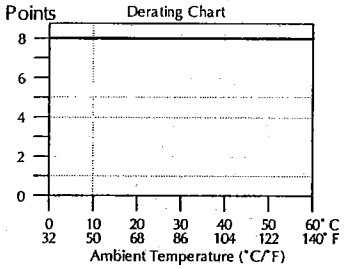

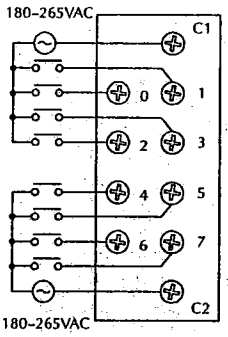

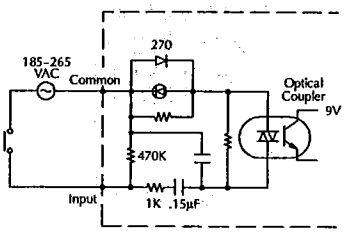

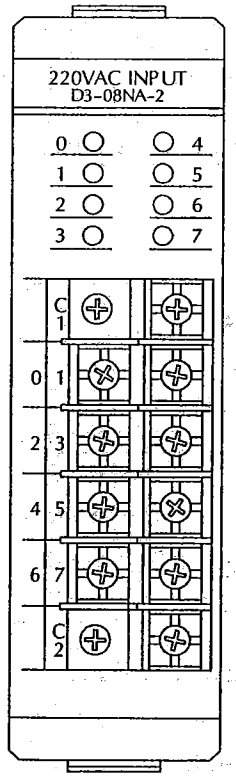

www.automationdirect.com/dl305

RELAY OUTPUT MODULES

D3-08TR Relay Output $67.00	
Outputs per Module	8
Commons per Module	2 (isolated)
Operating Voltage	5-265VAC 5-30VDC
Output Type	Form A (SPST)
Peak Voltage	265VAC/30VDC
AC Frequency	47-63Hz
ON Voltage Drop	N/A
Max. Current	4A/point AC 5A/point DC 6A/common
Max Leakage Current	1mA @ 220VAC
Max Inrush Current	5A
Minimum Load	5mA @ 5V
Base Power Required	9V 45mA/ON pt. (360 mA max) 24V N/A
OFF to ON Response	5ms
ON to OFF Response	5 ms
Terminal Type	Non-removable
Status Indicators	Logic side
Weight	7oz. (200g)
Fuses	2 (one 10A per common) Order D3-FUSE-5 (5 per pack) $$$

D3-16TR Relay Output $135.00	
Outputs per Module	16
Commons per Module	2 (isolated)
Operating Voltage	5-265VAC 5-30 VDC
Output Type	16 Form A (SPST)
Peak Voltage	265VAC/30VDC
AC Frequency	47-63Hz
ON Voltage Drop	N/A
Max. Current	2A/point AC/DC (resistive) 8A/common AC/DC
Max Leakage Current	0.1mA @ 220VAC
Max Inrush Current	2A
Minimum Load	5mA @ 5V
Base Power Required	9V 30mA/ON pt. (480 mA max) 24V N/A
OFF to ON Response	12ms
ON to OFF Response	12ms
Terminal Type	Removable
Status Indicators	Logic side
Weight	8.5oz. (248g)
Fuses	None

1-800-633-0405

Typical Relay Life (Operations)

Voltage	Resistive	Solenoid	Closures
220VAC	4A	0.5A	100k
220VAC		0.05A	800k
110VAC	4A	0.5A	100k
110VAC		0.1A	650k
24VDC	5A	0.5A	100k

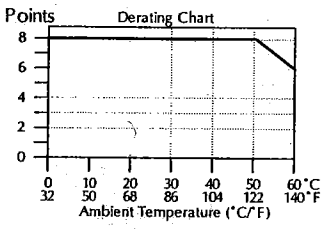

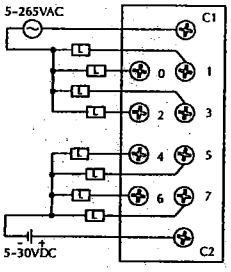

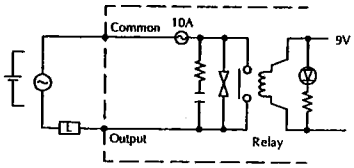

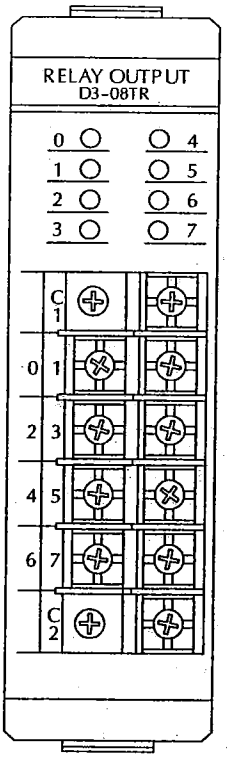

Typical Relay Life (Operations)

Voltage	Resistive	Solenoid	Closures
220VAC	2A	0.25A	100k
220VAC		0.03A	800k
110VAC	2A	0.25A	100k
110VAC		0.05A	650k
24VDC	2A	0.25A	100k

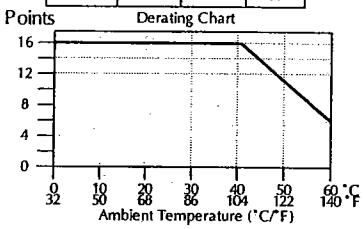

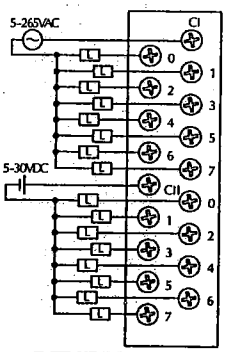

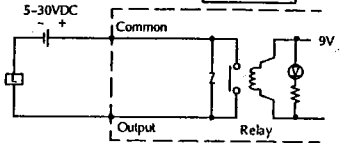

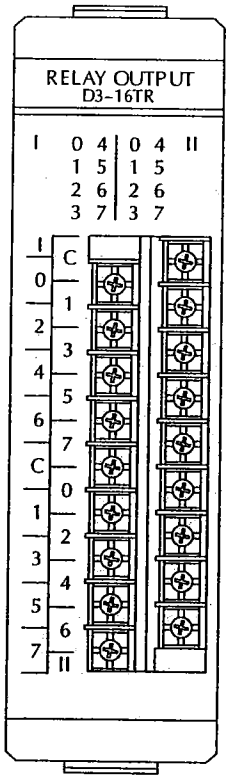

DC OUTPUT MODULES

D3-04TD1 DC Output $55.00	
Outputs per Module	4 (current sinking)
Commons per Module	4 (internally connected)
Operating Voltage	5-24VDC
Output Type	Field effect transistor
Peak Voltage	45VDC
AC Frequency	N/A
ON Voltage Drop	0.9V @ 6A
Max. Current	2A/point 6A/module
Max Leakage Current	0.4mA @ 40VDC
Max Inrush Current	6A/100ms
Minimum Load	5mA
Base Power Required	9V 12mA/pt (48mA Max) 24V 5mA
OFF to ON Response	0.1ms
ON to OFF Response	0.1ms
Terminal Type	Non-removable
Status Indicators	Logic side
Weight	4.2oz. (120g)
Fuses	4 (one 5A per common) user replaceable

D3-08TD1 DC Output $57.00	
Outputs per Module	8 (current sinking)
Commons per Module	2 (internally connected)
Operating Voltage	5-24VDC
Output Type	NPN (open collector)
Peak Voltage	45VDC
AC Frequency	N/A
ON Voltage Drop	0.8V @ 0.5A
Max. Current	0.5A/point 1.8/common
Max Leakage Current	0.1mA @ 40VDC
Max Inrush Current	3A/20ms 1A/100ms
Minimum Load	1mA
Base Power Required	9V 20mA max 24V 3mA/pt (24mA Max)
OFF to ON Response	0.1ms
ON to OFF Response	0.1ms
Terminal Type	Non removable
Status Indicators	Logic side
Weight	4.2oz. (120g)
Fuses	2 (one 3A per common) non-replaceable

1-800-633-0405

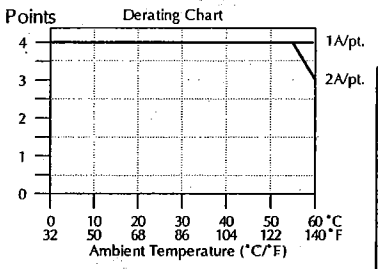

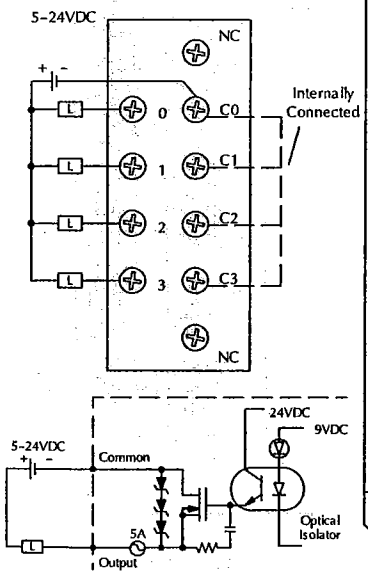

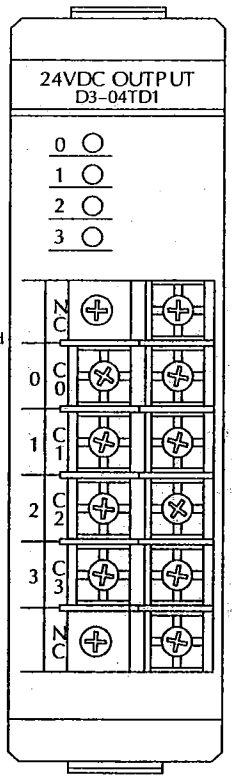

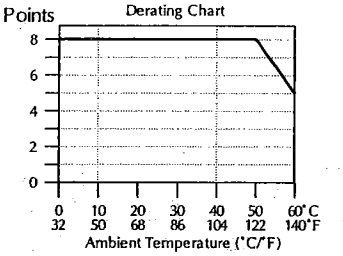

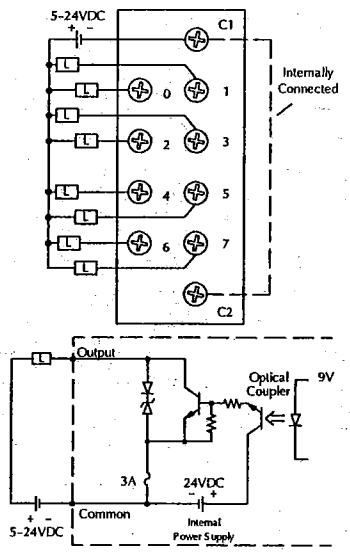

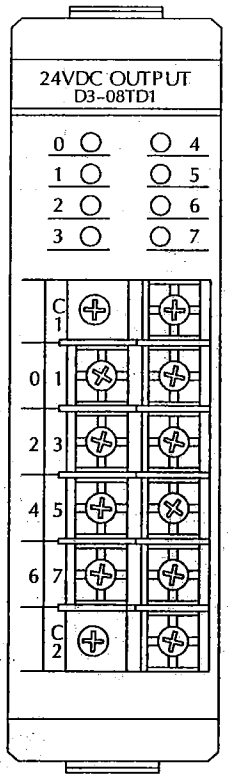

Analog Input Modules

F3-08AD-1 8-Channel Analog Input $292.00 (Replaces F3-08AD)	
Number of Channels	8, single ended (one common)
Input Ranges	4-20mA
Resolution	12 bit (1 in 4096)
Low Pass Filter	-3db @ 200Hz (-6db/octave)
Input Impedance	250ohm ± 0.1%, 1/2W current input
Absolute Maximum Ratings	±40mA
Conversion Time	1 channel per CPU scan
Converter Type	Successive approximation, MAX170
Linearity Error	± 1 count (0.03% of full scale) maximum
Input Stability	±0.05 count
Maximum Inaccuracy	0.1% of full scale at 77°f (25°C)
Accuracy vs. Temperature	57ppm/°C maximum full scale (including maximum offset change of 2 counts)

Recommended Fuse	0.032A, Series 217 fast-acting
Power Budget Requirement	45mA @9 VDC, 55mA @ 24VDC
External Power Supply	None required
Operating Temperature	32° to 140°F (0° to 60°C)
Storage Temperature	-4° to 158°F (-20° to 70°C)
Relative Humidity	5 to 95% (non-condensing)
Environmental air	No corrosive gases permitted
Vibration	MIL STD 810C 514.2
Shock	MIL STD 810C 516.2
Noise Immunity	NEMA ICS3-304

Note 1: Terminate all shields at their respective signal source.

Note 2: To avoid "ground loop" errors, the following transmitter types are recommended:
2 and 3 wire: Isolation between input signal and P/S
4 wire: Full isolation between input signal, P/S and output signal.

Note 3: A Series 217 0.032A fast-acting fuse is recommended for 4-20mA applications.

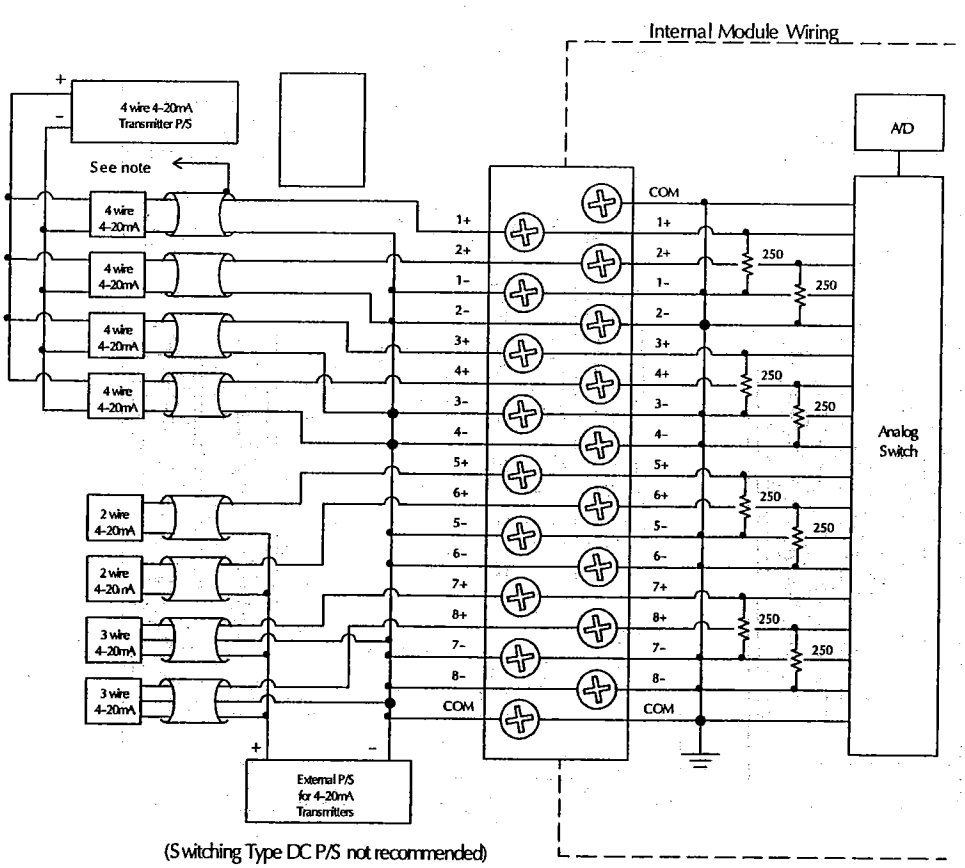

(Switching Type DC P/S not recommended)

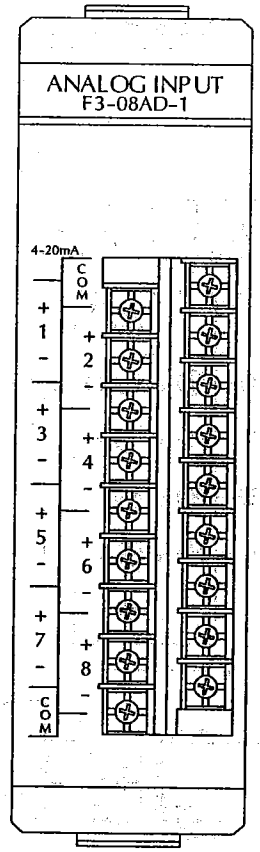

www.automationdirect.com/dl305

Analog Output Modules

D3-02DA 2-Channel Analog Output $205.00	
Number of Channels	2 (independent)
Output Ranges	0 - 10V, 4-20mA
Channels Individually Configured	Yes. Use different terminals for voltage and current.
Resolution	8-bit (1 in 256)
Output Type	Single ended
Output Impedance	0.5ohm maximum, voltage output
Output Current	10mA minimum, voltage output @ 10VDC
Load Impedance	550ohm max. 5ohm min., current output
Total Inaccuracy	±0.4% maximum at 25°C
Accuracy vs. Temperature	±50ppm/°C maximum

Conversion Time	100µs maximum(2 channels/scan)
Power Budget Requirement	80mA @ 9V
External Power Supply	24VDC, ±10%, 170mA, class 2
Operating Temperature	32° to 140°F (0° to 60°C)
Storage Temperature	-4° to 158°F (-20° to 70°C)
Relative Humidity	5 to 95% (non-condensing)
Environmental Air	No corrosive gases permitted
Vibration	MIL STD 810C 514.2
Shock	MIL STD 810C 516.2
Noise Immunity	NEMA ICS3-304

1-800-633-0405

Note 1: Shields should be connected to the 0V of the module or to the 0V of the P/S.

Note 2: Unused voltage and current outputs should remain open (no connections).

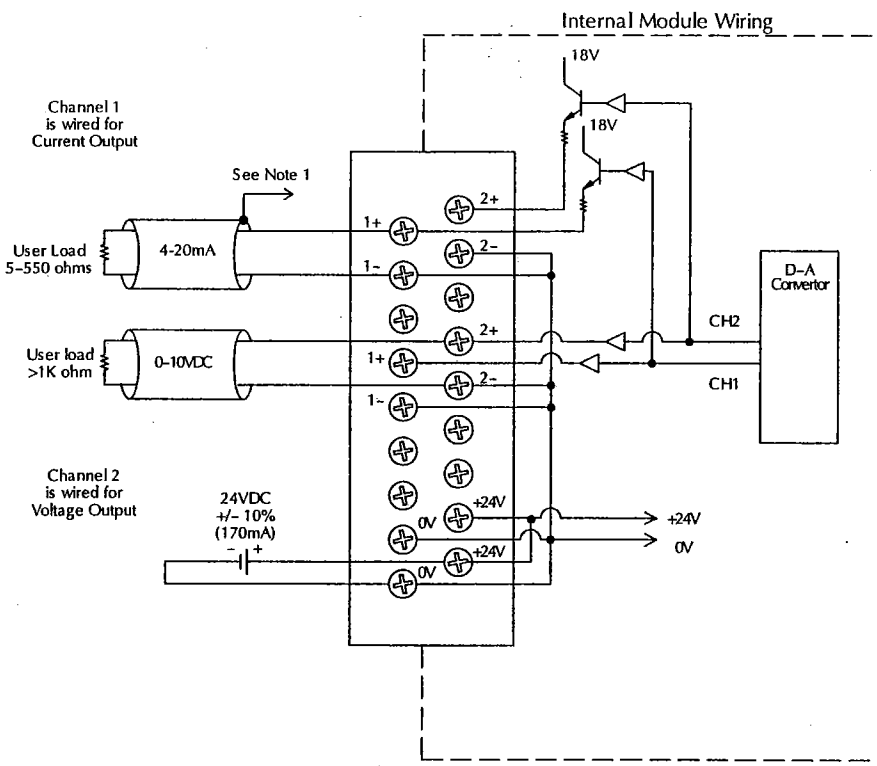

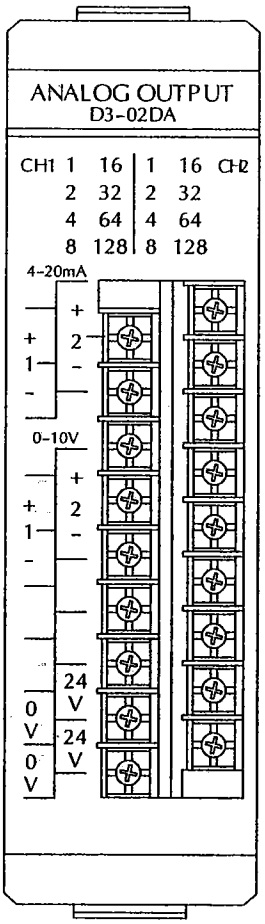

Data Sheet

Series B
Electronic Metering Pumps

Configuration

Model B92 1 - 392SI

Control & Output Code

Manual Control
Speed (stroking frequency) and stroke length manually adjustable

B11 ---	1.6 GPH	(6.1 l/h) ---	150 psi	(10.30 Bar)
B12 ---	2.5 GPH	(9.5 l/h) ---	100 psi	(6.90 Bar)
B13 ---	4.5 GPH	(17.0 l/h) ---	50 psi	(3.50 Bar)
B14 ---	7.0 GPH	(26.5 l/h) ---	30 psi	(2.07 Bar)

Instrument Responsive / Manual Control
Manual adjustment features of Series B1 plus switch conversion to external control for automatic systems.

B71 ---	1.6 GPH	(6.1 l/h) ---	150 psi	(10.30 Bar)
B72 ---	2.5 GPH	(9.5 l/h) ---	100 psi	(6.90 Bar)
B73 ---	4.5 GPH	(17.0 l/h) ---	50 psi	(3.50 Bar)
B74 ---	7.0 GPH	(26.5 l/h) ---	30 psi	(2.07 Bar)
B91 ---	1.6 GPH	(6.1 l/h) ---	150 psi	(10.30 Bar)
→ B92 ---	2.5 GPH	(9.5 l/h) ---	100 psi	(6.90 Bar)
B93 ---	4.5 GPH	(17.0 l/h) ---	50 psi	(3.50 Bar)
B94 ---	7.0 GPH	(26.5 l/h) ---	30 psi	(2.07 Bar)

Voltage Code

1 --------- 120 VAC, US Plug
2 --------- 240 VAC, US Plug
3 --------- 220-240 VAC, DIN Plug
5 --------- 240-250 VAC, UK Plug
6 --------- 240-250 VAC, AUST/NZ Plug
7 --------- 220-240 VAC, SWISS Plug

Liquid End

See next page for complete Liquid End specifications and selection.

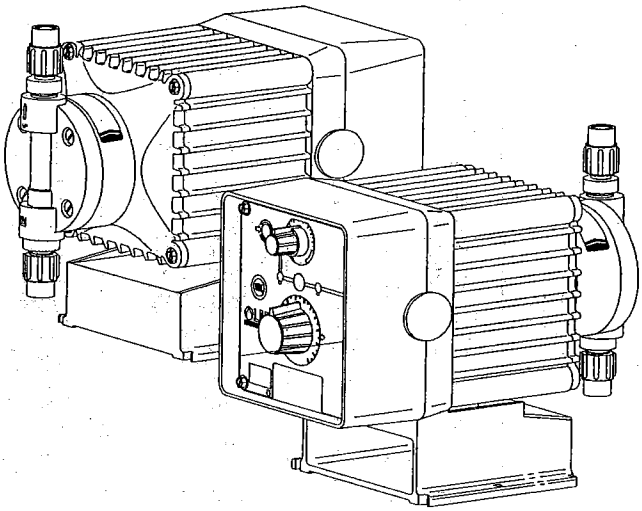

Dimensions

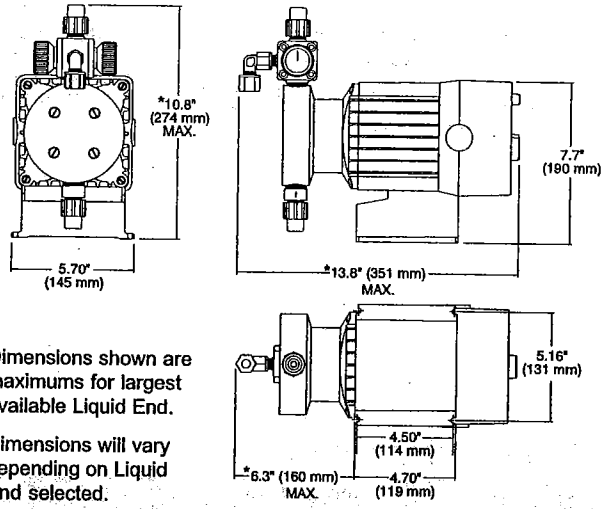

* Dimensions shown are maximums for largest available Liquid End.

Dimensions will vary depending on Liquid End selected.

Specifications

Series	Strokes Per Minute (Adjustable) Min	Max	Stroke Length (Adjustable) Recommended Minimum	Average Input Power @ Max Speed	Shipping Weight
B11, B71, B91 B12, B72, B92 B13, B73, B93 B14, B74, B94	1	100	10%	29 watts	15 lbs (6.9 kg)

LMI MILTON ROY
8 Post Office Square
Acton, MA 01720 USA
TEL: (978) 263-9800
FAX: (978) 264-9172
http://www.lmipumps.com

Replaces same of Rev. F 3/97
1417. G 2/98

Configuration Data & Materials of Construction

Drive Assembly	Liquid End No.	Size Code	Materials of Construction: Head & Fittings	Balls	Liquifram™	Check Valve	Accessory	Tubing & Connections: Discharge	Suction
	390SI†	0.9	Acrylic / PGC™	Ceramic	Fluorofilm™	PGC™/Polyprel®	4FV	PE .375" O.D.	
	391SI†	0.9	PGC™ / PGC™	Ceramic	Fluorofilm™	PGC™/Polyprel®	4FV	PE .375" O.D.	
	392SI†	0.9	PVDF / PVDF	Ceramic	Fluorofilm™	PVDF/Polyprel®	4FV	PE .375" O.D.	
B91 ■ -	393SI†	0.9	PVDF / PVDF	Ceramic	Fluorofilm™	PVDF/PTFE	4FV	PE .375" O.D.	
B92 ■ -	85 HV	0.9	Polypropylene	316 S.S.	Fluorofilm™	PTFE		PE .5" O.D.	Vinyl .938" O.D.
B71 ■ -	86	0.9	Acrylic / PP	316 S.S.	Fluorofilm™	Hypalon®		PE .5" O.D.	Vinyl .938" O.D
B72 ■ -	89	0.9	UHMW PE	Ceramic	Hypalon®	Hypalon®		PE .5" O.D.	Vinyl .500" O.D.
B11 ■ -	91FS	0.9	Acrylic / PVDF	PTFE	Hypalon®	Hypalon®	4FV	PE .375" O.D.	Vinyl .375" O.D.
B12 ■ -	92S**	0.9	PVC	Ceramic	Fluorofilm™	PTFE	4FV	PE .375" O.D.	
	94S**	0.9	PVC	Ceramic	Fluorofilm™	PTFE	4FV	Pipe 1/4" NPT M	
	95S**	0.9	Polypropylene	Ceramic	Fluorofilm™	PTFE	4FV	PE .375" O.D.	
	297	0.9	316 S.S.	316 S.S.	Fluorofilm™	316 S.S.		Pipe 1/4" NPT M	
	360SI†	1.8	Acrylic / PGC™	Ceramic	Fluorofilm™	PGC™/Polyprel®	4FV	PE .375" O.D.	
	361SI†	1.8	PGC™ / PGC™	Ceramic	Fluorofilm™	PGC™/Polyprel®	4FV	PE .375" O.D.	
	362SI†	1.8	PVDF / PVDF	Ceramic	Fluorofilm™	PVDF/Polyprel®	4FV	PE .375" O.D.	
	363SI†	1.8	PVDF / PVDF	Ceramic	Fluorofilm™	PVDF/PTFE	4FV	PE .375" O.D.	
B93 ■ -	71FS	1.8	Acrylic / PVDF	PTFE	Hypalon®	Hypalon®	4FV	PE .5" O.D.	Vinyl .5" O.D.
B73 ■ -	72S**	1.8	PVC	Ceramic	Fluorofilm™	PTFE	4FV	PE .5" O.D.	
B13 ■ -	74S**	1.8	PVC	Ceramic	Fluorofilm™	PTFE	4FV	Pipe 1/4" NPT M	
	75HV	1.8	Polypropylene	316 S.S.	Fluorofilm™	PTFE		PE .5" O.D.	Vinyl .938" O.D.
	75S**	1.8	Polypropylene	Ceramic	Fluorofilm™	PTFE	4FV	PE .5" O.D.	
	76	1.8	Acrylic / PP	316 S.S.	Fluorofilm™	Hypalon®		PE .5" O.D.	Vinyl .938" O.D.
	79	1.8	UHMW PE	Ceramic	Hypalon®	Hypalon®		PE .5" O.D.	Vinyl .500" O.D.
	277	1.8	316 S.S.	316 S.S.	Fluorofilm™	316 S.S.		Pipe 1/4" NPT M	
	310SI†	3.0	Acrylic / PGC™	Ceramic	Fluorofilm™	PGC™/Polyprel®	4FV	PE .375" O.D.	
	311SI†	3.0	PGC™ / PGC™	Ceramic	Fluorofilm™	PGC™/Polyprel®	4FV	PE .375" O.D.	
B94 ■ -	312SI†	3.0	PVDF / PVDF	Ceramic	Fluorofilm™	PVDF/Polyprel®	4FV	PE .375" O.D.	
B74 ■ -	313SI†	3.0	PVDF / PVDF	Ceramic	Fluorofilm™	PVDF/PTFE	4FV	PE .375" O.D.	
B14 ■ -	11S**	3.0	Acrylic	Ceramic	Fluorofilm™	Polyprel®	4FV	PE .5" O.D.	Vinyl .5" O.D.
	12S**	3.0	PVC / PVDF	Ceramic	Fluorofilm™	Polyprel®	4FV	PE .5" O.D.	
	15S**	3.0	Polyprel®	Ceramic	Fluorofilm™	PTFE	4FV	PE .5" O.D.	
	217	3.0	316 S.S.	316 S.S.	Fluorofilm™	316 S.S.		Pipe 1/4" NPT M	

■ See front page for voltage code specifications.

** These Liquid Ends are available without a 4FV.

† To specify ¼" NPT male, change 'I' to 'P'. To specify black, UV resistant tubing, change 'I' to 'U'. To specify Bleed 4FV, change 'S' to 'B'. To specify 3FV, change 'S' to 'T'.

3FV Indicates that the pump is equipped with an LMI Three Function Valve (pressure relief, priming aid, line drain).

4FV Indicates that the pump is equipped with an LMI Four Function Valve. This diaphragm type anti-syphon/pressure relief valve is installed on the pump head. It provides anti-syphon protection and aids in priming, even under pressure.

Fluorofilm™ is a copolymer of PTFE and PFA.
Polyprel® is an elastomeric PTFE copolymer.

Polyprel is a registered trademark of Liquid Metronics, Inc.
Fluorofilm, Liquifram, PGC are trademarks of Liquid Metronics, Inc.
Hypalon is a registered trademark of E. I. du Pont de Nemours & Co., Inc.

Output Information

Series	Gallons per Hour* Min	Max	Liters per Hour* Min	Max	mL/cc per Minute* Min	Max	mL/cc per Stroke Min	Max	Maximum Injection Pressure
B11, B71, B91	0.002	1.6	0.006	6.1	0.10	101	0.10	1.01	150 psi (10.30 Bar)
B12, B72, B92	0.003	2.5	0.009	9.5	0.16	158	0.16	1.58	100 psi (6.90 Bar)
B13, B73, B93	0.005	4.5	0.017	17.0	0.28	284	0.28	2.84	50 psi (3.50 Bar)
B14, B74, B94	0.007	7.0	0.027	26.5	0.44	442	0.44	4.42	30 psi (2.07 Bar)

* Minimum output is based on one (1) stroke per minute and 10% stroke setting, minimum output can be reduced further in external mode.
Series B9 pumps may be programmed for strokes per hour for lower outputs.

© 1998 LMI Milton Roy - All Rights Reserved
Printed in USA
Specifications subject to change without notice.

Specification **Sheet**

Series B

GENERAL

Chemical metering pumps shall be positive displacement, Liquifram™ type pumps that are UL and CUL approved. Output volume shall be adjustable while pumps are in operation from zero to maximum capacity of:

B11, B71, B91 - 1.6 GPH (6.1 liters per hour)
B12, B72, B92 - 2.5 GPH (9.5 liters per hour)
B13, B73, B93 - 4.5 GPH (17.0 liters per hour)
B14, B74, B94 - 7.0 GPH (26.5 liters per hour)

Chemical metering pumps shall be capable, without a hydraulically backed diaphragm, of injecting solutions against pressures up to:

B11, B71, B91 - 150 psig(10.3 bar)
B12, B72, B92 - 100 psig(6.9 bar)
B13, B73, B93 - 50 psig(3.4 bar)
B14, B74, B94 - 30 psig(2.1 bar)

SERIES B1

Adjustment shall be by means of readily accessible dial knobs, one for changing stroke length and the other for changing stroke frequency. Both knobs are to be located opposite the liquid handling end.

SERIES B7

Control of Series B7 metering pumps shall be selectable between internal and external pulsing by means of a 3-position center-off switch. Stroke length shall be adjustable by means of readily accessible dial knob. When in external pulsed mode, Series B7 units shall accept signals without the use of electrical timer or internal timer. Pressure capacity shall be adjustable to reduce noise, vibration and wear.

SERIES B9

Series B9 metering pumps shall have a clear liquid crystal display. Control shall be selectable between internal and external pulsing by means of a tactile keypad. Internal stroke frequency shall be adjustable from 1 stroke per hour to 100 strokes per minute. Pressure capacity shall be keypad adjustable to reduce noise, vibration and wear. Metering pump shall be capable of dividing or multiplying pulse inputs from 1 to 999 or responding directly or inversely to a 4-20mA input signal.

DRIVE

The pump drive shall be totally enclosed with no exposed moving parts. Solid state electronic pulser shall be fully encapsulated and supplied with quick connect terminals at least 3/16" (4.75 mm) wide. Electronics shall be housed in chemical resistant enclosure at the rear of the pump for maximum protection against chemical spillage. Electrical power consumption shall not exceed 29 watts per hour under full speed and maximum pressure conditions. Pump weight shall not exceed 15 lbs (6.9 kg).

AUTOMATIC PRESSURE RELIEF

To eliminate need for pressure relief valve, Liquifram™ shall automatically stop pulsating when discharge pressure exceeds pump pressure rating by not more than 35%.

MATERIAL

Chemical metering pump housing shall be of chemically resistant glass fiber reinforced thermoplastic. All exposed fasteners shall be stainless steel. Chemical metering pump valves shall be ball type, with ceramic balls[1]. Valve seat and seal ring shall be renewable by replacing the combination seat-seal ring[2] or cartridge valve assembly. Pump head shall be of transparent acrylic[3] material capable of resisting the pumped chemical. Fittings and connections at pump head shall be PVC[4].

CHECK VALVES AND TUBING

A total of 16 ft (4.8 m) of polyethylene tubing[5] shall be provided per pump complete with compression connections. A foot valve with integral one piece strainer shall be provided for the suction line, and an injection/back pressure check valve with ½" NPT male connection for the injection point. The injection check valve shall incorporate a dilating orifice which prohibits scale formation and accumulation of crystalline deposits.

Notes:

1. Type 316 stainless steel or PTFE may be specified.
2. Hypalon®, PTFE or Polyprel® may be specified.
3. PVDF, PVC, Polypropylene, or Type 316 stainless steel may be specified.
4. PVDF, Polypropylene, or Type 316 stainless steel may be specified.
5. 6 ft (1.8 m) of vinyl suction tubing may be specified in place of polyethylene for the suction side only. 1/4" or 1/2" pipe thread may be specified.

LMI
MILTON ROY

8 Post Office Square
Acton, MA 01720 USA
TEL: (978) 263-9800
FAX: (978) 264-9172
http://www.lmipumps.com

ISO9001

Replaces same of Rev. F 7/96
1034. G 12/99

B Series

LE Codes	W	X	Y	Z
71T, 72T, 75T, 81T, 82T, 85T	3.25 (82.5mm)	8.5 (216.0mm)	.65 (16.5mm)	10.70 (271.8mm)
71S, 72S, 75S 81S, 82S, 85S	4.55(115.6mm)	9.7 (246.5mm)	.65 (16.5mm)	12.00 (304.8mm)
74, 94	3.25 (82.5mm)	8.5 (216.0mm)	.65 (16.5mm)	10.70 (271.8mm)
76, 86	3.55 (90.2mm)	9.5 (241.3mm)	.65 (16.5mm)	11.00 (279.4mm)
77, 97	3.25 (82.5mm)	8.5 (216.0mm)	.65 (16.5mm)	10.70 (271.8mm)
91T, 92T, 95T	3.25 (82.5mm)	8.5 (216.0mm)	.65 (16.5mm)	10.70 (271.8mm)
91S, 91FS 92S, 95S	4.55(115.6mm)	9.7 (246.5mm)	.65 (16.5mm)	12.00 (304.8mm)

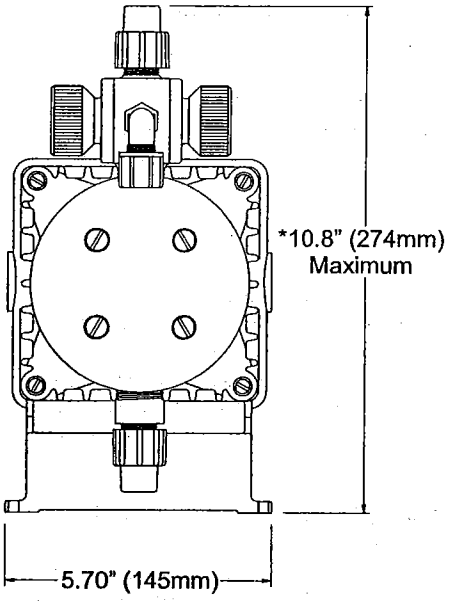

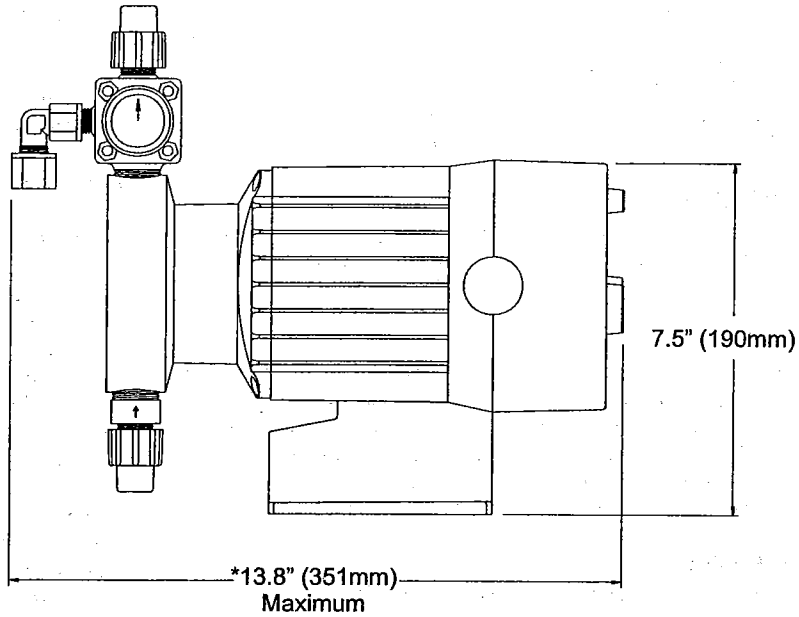

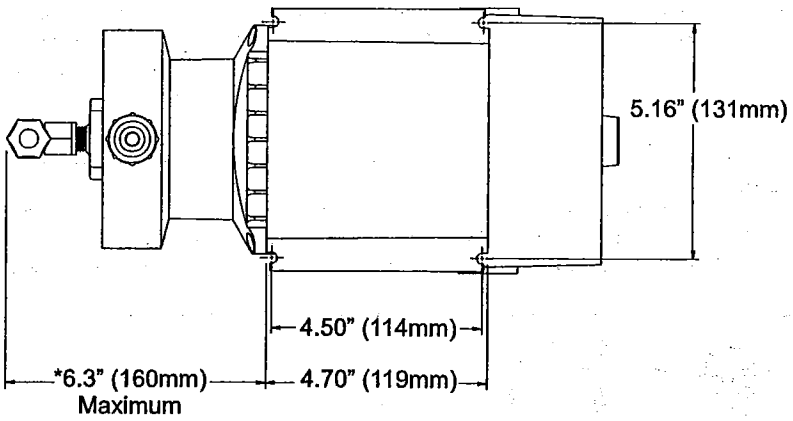

*Dimensions shown are maximum for largest liquid end available.These dimensions vary depending on the liquid end selected.

© 1999 LMI Milton Roy - All Rights Reserved
Printed in USA
Specifications subject to change without notice.

Polyprel is a registered trademark of Liquid Metronics Incorporated.
Liquifram, Liquitron, Micropace are trademarks of Liquid Metronics Incorporated.
Hypalon and Viton are registered trademarks of E. I. du Pont de Nemours & Co., Inc.

The Probe

This ultrasonic device combines transducer and electronics in a single package for effective liquid level measurement in open or closed vessels. The transducer is available in Tefzel® or Kynar Flex® making it suitable for use in a wide variety of industries.

It's easy to install and maintain, and can be quickly removed for cleaning as required by the food, beverage and pharmaceutical industries.

The Probe features patented Sonic Intelligence® echo-processing for superior reliability. A filter discriminates between the true echo from the material and false echoes from acoustical or electrical noises and agitator blades in motion. The time for the pulse to travel to the material and back is temperature-compensated and converted into distance for display, mA output and relay actuation. It offers a digital communications option for data collection and remote access using HART® field communication protocol.

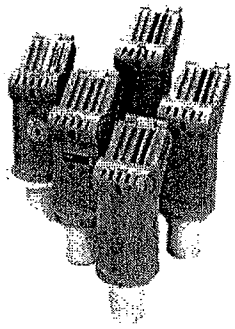

Product Features

- Easy to install, program and maintain
- Accurate and reliable
- Kynar Flex® or Tefzel® transducers available
- Sanitary model available
- Patented Sonic Intelligence® echo-processing
- Built-in temperature compensation

Technical Specifications

	3 Wire Model		2 Wire Model	
	Standard	Extended	Standard	Intrinsically Safe
Operations				
Measurement Range	0.25 to 5 m (0.8 to 16.4 ft)	0.25 to 8 m (0.8 to 26.2 ft)	0.25 to 5 m (0.8 to 16.4 ft)	0.25 to 5 m (0.8 to 16.4 ft)
Accuracy (in air)	0.25% of target range	0.25% of target range	0.25% of target range	0.25% of target range
Resolution	3 mm (0.125")	3 mm (0.125")	3 mm (0.125")	3 mm (0.125")
Ambient Temperature	-40 to 60°C (-40 to 140°F)	-40 to 60°C (-40 to 140°F)	-40 to 60°C (-40 to 140°F)	-40 to 60°C (-40 to 140°F)
With Metallic Mounting	20 to 60°C (-5 to 140°F)	20 to 60°C (-5 to 140°F)	20 to 60°C (-5 to 140°F)	20 to 60°C (-5 to 140°F)
Temp. Compensation	Built-in	Built-in	Built-in	Built-in
Echo Processing	Sonic Intelligence	Sonic Intelligence	Sonic Intelligence	Sonic Intelligence
Power Supply	18 to 30 Vdc, 0.2 A max.	18 to 30 Vdc, 0.2 A max.	12 to 28 Vdc, 0.1 A surge	12 to 28 Vdc, 0.1 A surge
Max. Power Consumption	5w (200 mA @ 24 Vdc)	5w (200 mA @ 24 Vdc)	0.75w (25 mA @ 28 Vdc)	0.75w (25 mA @ 28 Vdc)
Max. Static Operating Pressure	Vent to atmosphere	Vent to atmosphere	Vent to atmosphere	Vent to atmosphere
Interface				
mA Output •Range	4 to 20 mA	4 to 20 mA	4 to 20 mA	4 to 20 mA
•Span	Proportional or inversly proportional	Proportional or inversly proportional	Proportional or inversly proportional	Proportional or inversly proportional
•Loading	750 Ω max @ 24 Vdc	750 Ω max @ 24 Vdc	Max Loop load = 600 Ω @ 24 Vdc	Max Loop load = 600 Ω @ 24 Vdc (includes barrier resistance)
Status Relay	Programmed for level alarm or fault	Programmed for level alarm or fault	No	No
PLC Compatibility	Yes	Yes	Yes	Yes
Enclosure	Type 4X / NEMA 4X / IP65	Type 4X / NEMA 4X / IP65	Type 4X / NEMA 4X / IP65	Type 4X / NEMA 4X / IP65
• Electronics	Molded PVC	Molded PVC	Molded PVC	Molded PVC
• Transducer	Tefzel® or Kynar Flex®	Tefzel® or Kynar Flex®	Tefzel® or Kynar Flex®	Tefzel® or Kynar Flex®
Communications	HART® protocol optional	HART® protocol optional	No	No
Mounting Hardware				
Threaded	2" NPT, 2" BSP, PF2	2" NPT, 2" BSP, PF2	2" NPT, 2" BSP, PF2	2" NPT, 2" BSP, PF2
Flange Adaptors	3" univeral, 4" sanitary	3" univeral, 4" sanitary	3" univeral, 4" sanitary	3" univeral
Weight (without flange)	1.5 kg (3.3 lbs)	1.5 kg (3.3 lbs)	1.5 kg (3.3 lbs)	1.5 kg (3.3 lbs
(with flange adaptor)	1.7 kg (3.7 lbs)	1.7 kg (3.7 lbs)	1.7 kg (3.7 lbs)	1.7 kg (3.7 lbs)
Beam Angle	10° at -3 dB boundary	10° at -3 dB boundary	10° at -3 dB boundary	10° at -3 dB boundary
Selectable Damping (m/min)	5, 1, 0.03	5, 1, 0.03	5, 1, 0.03	5, 1, 0.03
Cable Entry	Two 2.2 mm (0.87") entrances. For use with the 13.5 cable gland or 1/2" NPT conduit connection.			
Approvals	• CE, CSA Nrmt, FM for general purpose locations	• CE, CSA Nrmt, FM for general purpose locations	• CE, CSA Nrmt, FM for general purpose locations	• Intrinsically Safe • CSA/FM Class I & II Div. I Group A, B, C, D, E, F, G • BASEEFA/CENELEC Ex ia IIC T4 • SAA Ex ia IIC T6 IP65

* Universal Mouting, Tefzel flange adaptor for 3" flanges.
Kynar Flex® is a registered trademark of ELF Atochem.
Tefzel® is a registered trademark of Dupont.

Specifications are subject to change without notice.

The Probe

Dimensions

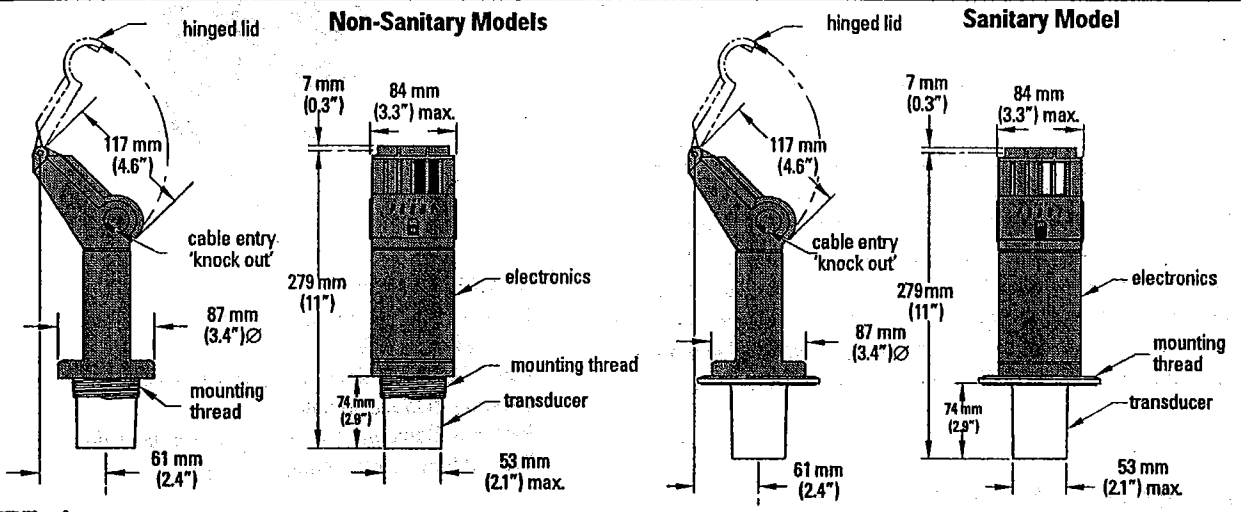

Wiring

3 Wire Model (Standard, Extended and Sanitary Models)

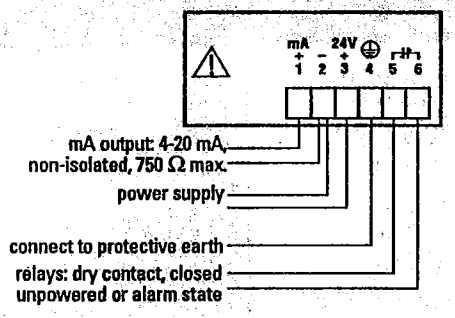

Display

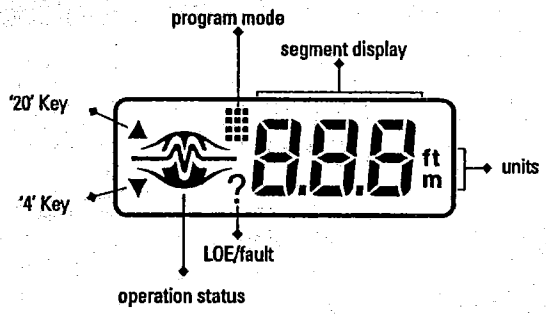

2 Wire Model (Standard and Sanitary Models)

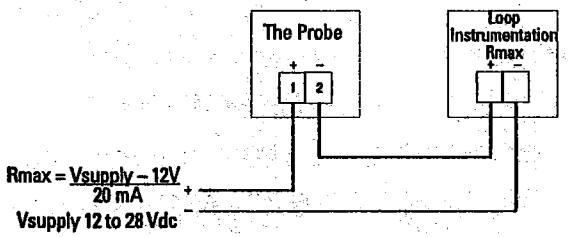

2 Wire Model (Intrinsically Safe Model)

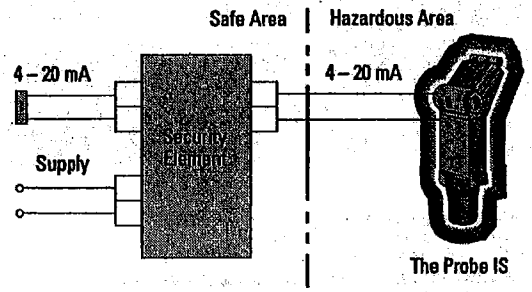

The SBE -- Encapsulated Series

The SBE Encapsulated industrial control transformers are epoxy encapsulated to seal the transformer windings against moisture, dirt and industrial contaminants. Extra deep, molded terminal barriers reduce the chance of electrical failure as the result of arcing or frayed lead wires. The rugged construction and proven reliability of the SBE design is uniquely suited for all industrial environments.

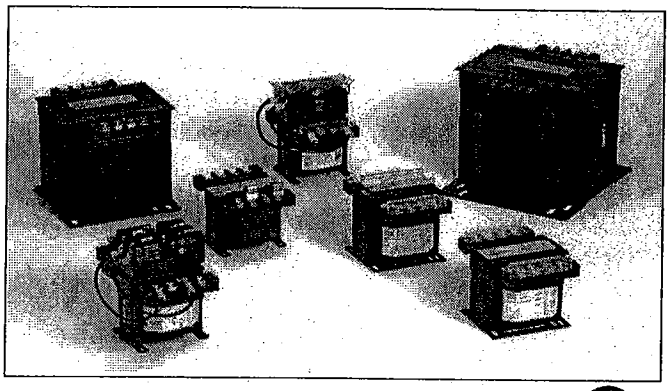

c UL us
E77014

Features

- 50 - 1000 VA, 50/60 Hz – suitable for world wide applications.
- Interleaved copper windings reduce I^2R losses and maximize efficiency.
- 55°C Rise, 105°C insulation system to minimize heat.
- Epoxy encapsulated to protect cores and coils against moisture, dirt, and other contaminants.
- Meets or Exceeds NEMA Standard ST 1 and ANSI C89.1 for load inrush capability.
- Integrally molded, flame retardant (IEC 707 / ISO Class 1210) Terminal Blocks provide greater terminal contact area and improved conductivity.
- Heavy gauge steel mounting plate.
- Mounting dimensions are compatible with similar control transformers.
- ***Secondary fuse holders (FB2X) included for 13/32 x 1- 1/2 cartridges (fuses not included).***
- ***Factory-installed fuse holders are available (See WA & WB options).***
- 10 + 2 year warranty.

Related Products

- Linear Power Supplies
- DIN Rail DC Power Supplies
- Constant Voltage Transformers
- Line Reactors

SBE Mounting Profiles

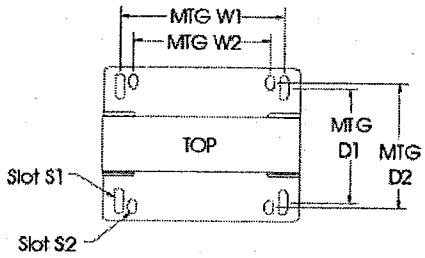

Mounting Dimensions

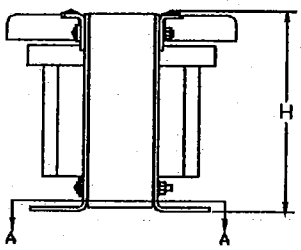

Profile

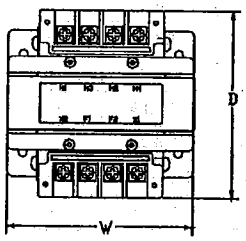

Top View

Accessories

Catalog Number	Description
FBP	Primary "CC" Rejection Type Fuse Holder (Finger Safe covers not available)
FB2	Secondary Fuse Holder only (Glass or Ceramic, ¼" x 1¼" fuse).
FB2X	Secondary Fuse Holder only (Midget Cartridge Type, 13/32" x 1½" fuse).
FBPC1	Primary "CC" Rejection Type Fuse Holder and Finger Safe Cover Kit
IP20	IEC Touchproof Cover Kit
SBEDIN	IEC Fuse Holder Adaptor Kit
WA & WB	Factory Installed Fuse Holder

Visit our website at www.solahevi duty.com or
contact **Technical Services** at **(800) 377-4384** with any questions.

SBE Encapsulated Series Selection Tables

Group 1 – 120 x 240 Volt Primary, 24 Volt Secondary, 60 Hz

c UL us
E77014

VA	Catalog Number	Height (inch)	Width (inch)	Depth (inch)	Mtg Width W1 / W2	Mtg Depth D1 / D2	Slot Size S1 / S2	Approx. Ship Weight (lbs)
50	E050E	2.72	3.01	3.99	2.51 / NA	2.02 / NA	.20 x .33 / .20 x .33	3
75	E075E	2.96	3.39	4.36	2.81 / 2.50	2.10 / NA	.20 x .50 / .20 x .50	3
100	E100E	2.96	3.39	4.61	2.81 / 2.50	2.37 / NA	.20 x .50 / .20 x .50	4
150	E150E	3.89	4.5	4.48	3.74 / 3.12	2.56 / 2.87	.20 x .65 / .20 x .33	6
200	E200E	3.89	4.5	4.79	3.74 / 3.12	2.87 / 3.18	.20 x .65 / .20 x .33	8
250	E250E	3.89	4.5	5.21	3.74 / 3.12	3.29 / 3.61	.20 x .65 / .20 x .33	9
300	E300E	4.53	5.25	5.09	4.38 / 3.75	3.10 / NA	.31 x .71 / .31 x .71	10
350	E350E	4.53	5.25	5.53	4.38 / 3.75	3.54 / NA	.31 x .71 / .31 x .71	13
500	E500E	4.53	5.25	6.31	4.38 / 3.75	4.33 / NA	.31 x .85 / .31 x .85	17
750	E750E	5.56	6.38	6.93	5.32 / 4.37	4.25 / 5.75	.31 x .85 / .31 x .85	25

Note: *Includes FB2X Secondary fuse holder.*

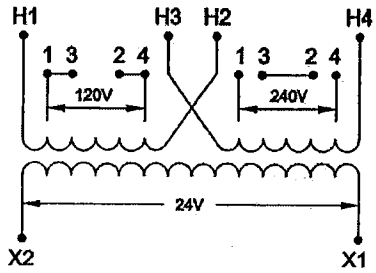

Group 1A – Factory installed Primary Fuse Holder Class "CC" and Secondary Fuse Holder (Glass or Ceramic, ¼" x 1¼" fuse type).

VA	Catalog Number	Height (inch)	Width (inch)	Depth (inch)	Mtg Width W1 / W2	Mtg Depth D1 / D2	Slot Size S1 / S2	Approx. Ship Weight (lbs)
50	E050EWA	4.18	3.01	3.99	2.51 / NA	2.02 / NA	.20 x .33 / .20 x .33	3
75	E075EWA	4.41	3.39	4.36	2.81 / 2.50	2.10 / NA	.20 x .50 / .20 x .50	4
100	E100EWA	4.41	3.39	4.61	2.81 / 2.50	2.37 / NA	.20 x .50 / .20 x .50	5
150	E150EWA	5.36	4.5	4.48	3.74 / 3.12	2.56 / 2.87	.20 x .65 / .20 x .33	8
200	E200EWA	5.36	4.5	4.79	3.74 / 3.12	2.87 / 3.18	.20 x .65 / .20 x .33	10
250	E250EWA	5.36	4.5	5.21	3.74 / 3.12	3.29 / 3.61	.20 x .65 / .20 x .33	11
300	E300EWA	5.99	5.25	5.09	4.38 / 3.75	3.10 / NA	.31 x .71 / .31 x .71	13
350	E350EWA	5.99	5.25	5.53	4.38 / 3.75	3.54 / NA	.31 x .71 / .31 x .71	15

Note: *Includes Finger Safe covers.*

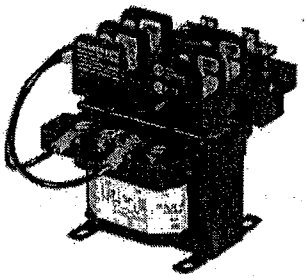

Group 1B – Factory installed Primary Fuse Holder Class "CC" and Secondary Fuse Holder (Midget Cartridge, 13/32" x 1½" fuse type).

VA	Catalog Number	Height (inch)	Width (inch)	Depth (inch)	Mtg Width W1 / W2	Mtg Depth D1 / D2	Slot Size S1 / S2	Approx. Ship Weight (lbs)
50	E050EWB	4.18	3.01	3.99	2.51 / NA	2.02 / NA	.20 x .33 / .20 x .33	3
75	E075EWB	4.41	3.39	4.36	2.81 / 2.50	2.10 / NA	.20 x .50 / .20 x .50	4
100	E100EWB	4.41	3.39	4.61	2.81 / 2.50	2.37 / NA	.20 x .50 / .20 x .50	5
150	E150EWB	5.36	4.5	4.48	3.74 / 3.12	2.56 / 2.87	.20 x .65 / .20 x .33	8
200	E200EWB	5.36	4.5	4.79	3.74 / 3.12	2.87 / 3.18	.20 x .65 / .20 x .33	10
250	E250EWB	5.36	4.5	5.21	3.74 / 3.12	3.29 / 3.61	.20 x .65 / .20 x .33	11
300	E300EWB	5.99	5.25	5.09	4.38 / 3.75	3.10 / NA	.31 x .71 / .31 x .71	13
350	E350EWB	5.99	5.25	5.53	4.38 / 3.75	3.54 / NA	.31 x .71 / .31 x .71	15
500	E500EWB	5.99	5.25	6.31	4.38 / 3.75	4.33 / NA	.31 x .85 / .31 x .85	20
750	E750EWB	7.01	6.38	6.93	5.32 / 4.37	4.25 / 5.75	.31 x .85 / .31 x .85	30

Note: *Includes Finger Safe covers.*

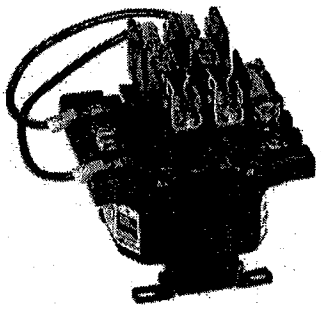

SBE Encapsulated Series Selection Tables

Group 2 – 220 x 440 Volt Primary, 110 Volt Secondary, 50/60 Hz
230 x 460 Volt Primary, 115 Volt Secondary, 50/60 Hz
240 x 480 Volt Primary, 120 Volt Secondary, 60 Hz

c UL us
E77014

VA	Catalog Number	Height (inch)	Width (inch)	Depth (inch)	Mtg Width W1 / W2	Mtg Depth D1 / D2	Slot Size S1 / S2	Approx. Ship Weight (lbs)
50	E050	2.72	3.01	3.99	2.51 / NA	2.02 / NA	.20 x .33 / .20 x .33	3
75	E075	2.96	3.39	4.36	2.81 / 2.50	2.10 / NA	.20 x .50 / .20 x .50	3
100	E100	2.96	3.39	4.61	2.81 / 2.50	2.37 / NA	.20 x .50 / .20 x .50	4
150	E150	3.89	4.5	4.48	3.74 / 3.12	2.56 / 2.87	.20 x .65 / .20 x .33	6
200	E200	3.89	4.5	4.79	3.74 / 3.12	2.87 / 3.18	.20 x .65 / .20 x .33	8
250	E250	3.89	4.5	5.21	3.74 / 3.12	3.29 / 3.61	.20 x .65 / .20 x .33	9
300	E300	4.53	5.25	5.09	4.38 / 3.75	3.10 / NA	.31 x .71 / .31 x .71	10
350	E350	4.53	5.25	5.53	4.38 / 3.75	3.54 / NA	.31 x .71 / .31 x .71	13
500	E500	4.53	5.25	6.31	4.38 / 3.75	4.33 / NA	.31 x .85 / .31 x .85	17
750	E750	5.56	6.38	6.93	5.32 / 4.37	4.25 / 5.75	.31 x .85 / .31 x .85	25
1000	E1000	5.56	6.38	7.36	5.32 / 4.37	4.68 / 6.18	.31 x .85 / .31 x .85	32

Note: *Includes FB2X Secondary fuse holder.*

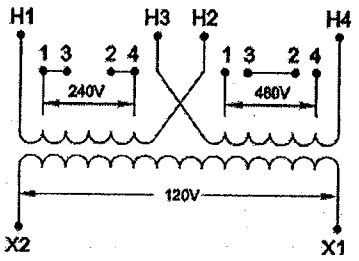

Group 2A – Factory installed Primary Fuse Holder Class "CC" and Secondary Fuse Holder (Glass or Ceramic, ¼" x 1¼" fuse type).

VA	Catalog Number	Height (inch)	Width (inch)	Depth (inch)	Mtg Width W1 / W2	Mtg Depth D1 / D2	Slot Size S1 / S2	Approx. Ship Weight (lbs)
50	E050WA	4.18	3.01	3.99	2.51 / NA	2.02 / NA	.20 x .33 / .20 x .33	3
75	E075WA	4.41	3.39	4.36	2.81 / 2.50	2.10 / NA	.20 x .50 / .20 x .50	4
100	E100WA	4.41	3.39	4.61	2.81 / 2.50	2.37 / NA	.20 x .50 / .20 x .50	8
150	E150WA	5.36	4.5	4.48	3.74 / 3.12	2.56 / 2.87	.20 x .65 / .20 x .33	11
200	E200WA	5.36	4.5	4.79	3.74 / 3.12	2.87 / 3.18	.20 x .65 / .20 x .33	10
250	E250WA	5.36	4.5	5.21	3.74 / 3.12	3.29 / 3.61	.20 x .65 / .20 x .33	15
300	E300WA	5.99	5.25	5.09	4.38 / 3.75	3.10 / NA	.31 x .71 / .31 x .71	13
350	E350WA	5.99	5.25	5.53	4.38 / 3.75	3.54 / NA	.31 x .71 / .31 x .71	15
500	E500WA	5.99	5.25	6.31	4.38 / 3.75	4.33 / NA	.31 x .85 / .31 x .85	30
750	E750WA	7.01	6.38	6.93	5.32 / 4.37	4.25 / 5.75	.31 x .85 / .31 x .85	30
1000	E1000WA	7.01	6.38	7.36	5.32 / 4.37	4.68 / 6.18	.31 x .85 / .31 x .85	34

Note: *Includes Finger Safe covers.*

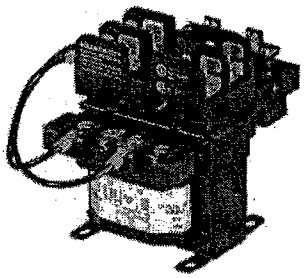

Group 2B – Factory installed Primary Fuse Holder Class "CC" and Secondary Fuse Holder (Midget Cartridge, 13/32" x 1½" fuse type).

VA	Catalog Number	Height (inch)	Width (inch)	Depth (inch)	Mtg Width W1 / W2	Mtg Depth D1 / D2	Slot Size S1 / S2	Approx. Ship Weight (lbs)
50	E050WB	4.18	3.01	3.99	2.51 / NA	2.02 / NA	.20 x .33 / .20 x .33	3
75	E075WB	4.41	3.39	4.36	2.81 / 2.50	2.10 / NA	.20 x .50 / .20 x .50	4
100	E100WB	4.41	3.39	4.61	2.81 / 2.50	2.37 / NA	.20 x .50 / .20 x .50	8
150	E150WB	5.36	4.5	4.48	3.74 / 3.12	2.56 / 2.87	.20 x .65 / .20 x .33	11
200	E200WB	5.36	4.5	4.79	3.74 / 3.12	2.87 / 3.18	.20 x .65 / .20 x .33	10
250	E250WB	5.36	4.5	5.21	3.74 / 3.12	3.29 / 3.61	.20 x .65 / .20 x .33	15
300	E300WB	5.99	5.25	5.09	4.38 / 3.75	3.10 / NA	.31 x .71 / .31 x .71	13
350	E350WB	5.99	5.25	5.53	4.38 / 3.75	3.54 / NA	.31 x .71 / .31 x .71	15
500	E500WB	5.99	5.25	6.31	4.38 / 3.75	4.33 / NA	.31 x .85 / .31 x .85	30
750	E750WB	7.01	6.38	6.93	5.32 / 4.37	4.25 / 5.75	.31 x .85 / .31 x .85	30
1000	E1000WB	7.01	6.38	7.36	5.32 / 4.37	4.68 / 6.18	.31 x .85 / .31 x .85	34

Note: *Includes Finger Safe covers.*

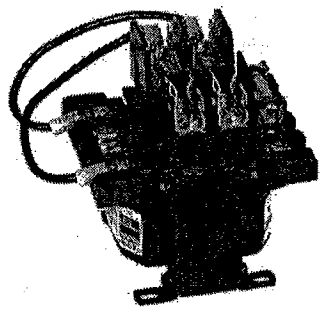

Visit our website at www.solaheviduty.com or
contact **Technical Services at (800) 377-4384** with any questions.

SBE Series Selection Tables - continued

Group 3 – 240 x 480 Volt Primary, 24 Volt Secondary, 60 Hz

c UL us E77014

VA	Catalog Number	Height (inch)	Width (inch)	Depth (inch)	Mtg Width W1 / W2	Mtg Depth D1 / D2	Slot Size S1 / S2	Approx. Ship Weight (lbs)
50	E050D	2.72	3.01	3.99	2.51 / NA	2.02 / N/A	.20 x .33	3
100	E100D	2.96	3.39	4.61	2.81 / 2.50	2.37 / NA	.20 x .50	5
250	E250D	3.89	4.5	5.21	3.74 / 3.12	3.29 / 3.61	.20 x .65	11
500	E500D	4.53	5.25	6.31	4.38 / 3.75	4.33 / NA	.31 x .71	20

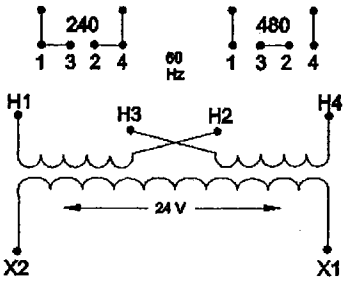

Note: *Includes FB2X Secondary fuse holder.*

Group 4 – 208/240/277 Volt Primary, 120/24 Volt Secondary, 60 Hz

c UL us E77014

VA	Catalog Number	Height (inch)	Width (inch)	Depth (inch)	Mtg Width W1 / W2	Mtg Depth D1 / D2	Slot Size S1 / S2	Approx. Ship Weight (lbs)
50	E050JL	2.72	3.01	3.99	2.51 / NA	2.02 / N/A	.20 x .33	3
100	E100JL	2.96	3.39	4.61	2.81 / 2.50	2.37 / NA	.20 x .50	5
250	E250JL	3.89	4.5	5.21	3.74 / 3.12	3.29 / 3.61	.20 x .65	11
500	E500JL	4.53	5.25	6.31	4.38 / 3.75	4.33 / NA	.31 x .71	20

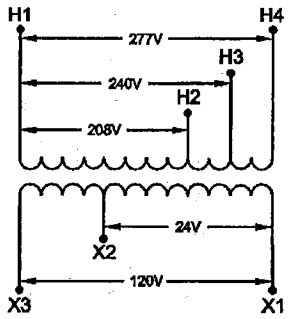

Note: *Will only accept one FB2 secondary fuse holder.*

Group 5 – 208/240/480/600 Volt Primary, 120/24 Volt Secondary, 60 Hz
200/230/460/575 Volt Primary, 115/23 Volt Secondary, 60 Hz

c UL us E77014

VA	Catalog Number	Height (inch)	Width (inch)	Depth (inch)	Mtg Width W1 / W2	Mtg Depth D1 / D2	Slot Size S1 / S2	Approx. Ship Weight (lbs)
50	E050JN	2.96	3.39	4.36	2.81 / 2.50	2.10 / NA	.20 x .50	4
100	E100JN	3.89	4.5	4.48	3.74 / 3.12	2.56 / 2.87	.20 x .65	8
150	E150JN	3.89	4.5	5.21	3.74 / 3.12	3.29 / 3.61	.20 x .65	11
250	E250JN	4.53	5.25	5.53	4.38 / 3.75	3.54 / NA	.31 x .71	15
500	E500JN	5.56	6.38	6.93	5.32 / 4.37	4.25 / 5.75	.31 x .85	30

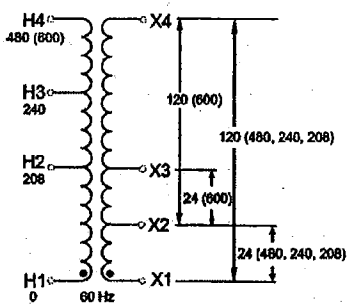

Note: *Will only accept one FB2 secondary fuse holder.*

technocheck

OUTPERFORMS, OUTWEARS ALL OTHER CHECK VALVES

Techno Corporation is a leading supplier of the highest quality check valves to all phases of industry. Thousands of Techno products are presently in service demonstrating outstanding performance.

The reason? Techno Corporation is committed to our capability to design, engineer, manufacture, and deliver valves to meet your most demanding needs. Our staff of engineers can speak your language! They can, and do, prepare specifications and design valves to meet the most difficult application requirements. Where custom design is the rule – not the exception – call on Techno!

elastomer hinge design...

DESIGN FEATURES:

Unrestricted full port seatless design
- Maximum Flow Area
- Minimum Pressure Drop

Elimination of Metal to Metal Rotating Parts
- No Pins to Wear
- No Seats to Wear
- No Routine Maintenance
- No Spring to Break

Non Slam Quick Closure Feature
- Minimum Travel of Valve Plates from Full Open to Full Closed Position Reduces Closing Time
- Elimination of Spring Restricts "slamming" action

Tight Shutoff Feature
- Flexible Elastomer Provides Perfect Seal
- Seals Tightly at Extremely Low Back Pressures

Can Be Mounted in Almost Any Position

STANDARD MATERIALS & CONFIGURATIONS

BODY MATERIALS	
METALS	THERMOPLASTIC
• ALUMINUM • BRONZE/BRASS • CAST IRON • CARBON STEEL • 304 & 316 STAINLESS STEEL	• PVC • CPVC • PP • PVDF
INTERNAL MATERIALS	
METALS	THERMOPLASTIC
• ALUMINUM • BRONZE/BRASS • CADMIUM PLATED STEEL • 304 & 316 STAINLESS STEEL • ELECTROLESS NICKEL PLATED STEEL OR ALUMINUM	• PVC • CPVC • PP • PVDF
ELASTOMER MATERIALS	
MATERIALS	*TEMPERATURE RANGE
• BUNA-N	-40 TO 225° F
• EPDM	-40 TO 300° F
• VITON	-20 TO 400° F
• SILICONE	-100 TO 500° F
• NEOPRENE	-40 TO 225° F
• BUTYL	-65 TO 300° F
• HYPALON	-20 TO 300° F
• FDA-- WHITE NEOPRENE	-40 TO 225° F
BODY CONFIGURATIONS	
• MALE THREADED ENDS • FEMALE THREADED ENDS • PLAIN ENDS • GROOVED ENDS	• FLANGED ENDS • WAFER STYLE • INCREASER/DECREASER • COMBINATIONS

*Temperature range is for general guidelines. The figures may vary with application and body/internal materials.
-Consult factory for materials, sizes and pressure ratings now shown as standard.

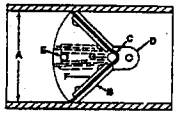

A. **FULL PORT** – Provides maximum flow with minimum pressure loss.

B. **VALVE PLATES** – Offer metal to metal support and minimum travel.

C. **SEALING MEMBER** – Provides tight shutoff and prolonged cycle life.

D. **HINGE POST** – Precision air foil design offers streamlined flow.

E. **TRAVEL STOP** – Prevents over-travel of plates.

F. **CLAMP PLATE** – Provides added support.

G. **HINGE CLAMP** – Remains stationary, no metal to metal rotation.

TECHNO'S METAL HINGED DESIGN

The industry has long awaited the Dual Plate Metal Hinged Check Valve that offers the innovative features of the new TECHNO design. The ease of maintenance, the exceptional flow characteristics, and the insurance of safety by elimination of body leakage, allows this check valve to be the engineer's dream.

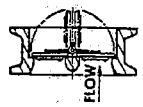

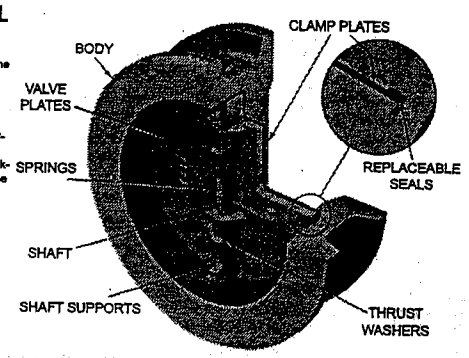

STANDARD MODELS AND MATERIALS OF CONSTRUCTION

STYLE	BODY	VALVE PLATES	SEALS	SPRINGS	TRIM*	ANSI-CLASS
5050	CAST IRON	BRONZE	EPDM	316 STAINLESS	316 STAINLESS	125
5051	CARBON STEEL	CARBON STEEL	BUNA-N	316 STAINLESS	316 STAINLESS	150
5051-316	316 STAINLESS STEEL	316 STAINLESS STEEL	BUNA-N	316 STAINLESS	316 STAINLESS	150
5053	CARBON STEEL	CARBON STEEL	BUNA-N	316 STAINLESS	316 STAINLESS	150
5053-316	316 STAINLESS STEEL	316 STAINLESS STEEL	BUNA-N	316 STAINLESS	316 STAINLESS	300
5056	CARBON STEEL	CARBON STEEL	BUNA-N	316 STAINLESS	316 STAINLESS	600
5056-316	316 STAINLESS STEEL	316 STAINLESS STEEL	BUNA-N	316 STAINLESS	316 STAINLESS	600

Trim items include: Shaft, Shaft Supports, Clamp Plates and Fasteners. Teflon Thrust Washers are Standard.

OPTIONAL MATERIALS SELECTION

SPRING DATA	
MATERIALS	TEMPERATURE RANGE
• INCONEL	750° F
• INCONEL X	1000° F
SEAL DATE	
MATERIALS	TEMPERATURE RANGE
• Buna-N	-60 to 225° F
• EPDM	-40 to 300° F
• Viton	-20 to 400° F
• Teflon	-20 to 450° F
• Silicone	-80 to 500° F
• FDA Approved White Neoprene	-40 to 225° F
• Metal to Metal +	-400 to 1000° F

* This temperature is for general guidelines. The figures may vary with application and body/internal materials.
+316 Stainless Steel Thrust Washers are standard with Metal to Metal Seal Option.

VALVES ARE MANUFACTURED IN U.S.A.

TECHNO CORPORATION
1529 GRAFTON ROAD
MILLBURY, MA 01527
PHONE: 508-987-9400
FAX: 508-839-0024

TECHNO CORPORATION

THE SHORT FORM (SF) WAFER IS THE PERFECT DESIGN FOR AIR SERVICE AND LIGHT DUTY LIQUID APPLICATIONS. AVAILABLE IN SIZES 1" – 72"

MALE THREADED ENDS, GROOVED ENDS, PLAIN ENDS: AVAILABLE IN SIZES 1" – 20"

FULL FLANGED: 125#, 150# AND 300# CLASS, AVAILABLE IN SIZES 1" – 48"

DEEP WELL: FEMALE THREADED VALVE DESIGNED FOR DEEP WELL APPLICATIONS DOWN TO 1000 FEET. AVAILABLE IN SIZES 1" – 12"

EXI-CHECK: INCREASER/DECREASER CHECK VALVES IDEAL FOR PUMP AND BLOWER DISCHARGE APPLICATIONS.

THERMOPLASTIC VALVES: PVC, CPVC, PP, AND PVDF; FLANGED, THREADED, PLAIN, GROOVED ENDS AND WAFER STYLE; AVAILABLE IN SIZES 1" – 24"

SPECIALS: WHERE CUSTOM DESIGN IS THE RULE – NOT THE EXCEPTION – CALL ON TECHNO.

MULTI-PURPOSE CHE
VALVES FOR INDUSTR

TECHNO CORPORATION

A Flow Technologies Company

DATE: _____

TECHNO CUSTOMER SERVICE: _____

PO# _____

CUSTOMER CONTACT: _____

CUSTOMER PHONE: _____

CUSTOMER FAX: _____

REQUESTED DELIVERY: _____

We have added this sheet for your convenience. You may make photocopies as necessary. When using this form as a purchase order or for quoting please fill out all necessary information and fax to our Customer Service Department at (508) 839-6624.

Please quote the following items:

Quantity	Item #'s:
__	___-___-___-___-___-___-___-___-___-___-___-___
__	___-___-___-___-___-___-___-___-___-___-___-___
__	___-___-___-___-___-___-___-___-___-___-___-___
__	___-___-___-___-___-___-___-___-___-___-___-___
__	___-___-___-___-___-___-___-___-___-___-___-___
__	___-___-___-___-___-___-___-___-___-___-___-___
__	___-___-___-___-___-___-___-___-___-___-___-___
__	___-___-___-___-___-___-___-___-___-___-___-___
__	___-___-___-___-___-___-___-___-___-___-___-___

Techno Use Only: _____ Notes: _____

Date Received: _____

Time Received: _____

Entered: _____

Sales Order Number: _____

Commission to: _____

Acknowledgement Sent: _____

TECHNO CORPORATION
1529 GRAFTON ROAD
MILLBURY, MASSACHUSETTS 01527
PHONE: (508) 887-9400
FAX: (508) 839-6624

techno corporation

SIZE

1.0 = 1"
1.3 = 1 1/4"
1.5 = 1 1/2"
2.0 = 2"
2.5 = 2 1/2"
3.0 = 3"
4.0 = 4"
5.0 = 5"
6.0 = 6"
8.0 = 8"
10. = 10"
12. = 12"
thru
72. = 72"
Ext-Checks:
E01 = 1.5 x 2
E02 = 2 x 2.5
E03 = 2 x 3
E04 = 2.5 x 3
E06 = 2.5 x 4
E06 = 3 x 4
E07 = 3 x 6
E08 = 4 x 5
E09 = 4 x 6
E10 = 5 x 6
E11 = 6 x 8
E12 = 8 x 10
E13 = 10 x 12
E14 = 12 x 14
E15 = 14 x 16
E16 = 16 x 18
E17 = 18 x 20
E18 = 20 x 24
E19 = 24 x 30
E20 = 30 x 36
E21 = 3 x 5
E22 = 5 x 8
E23 = 2 x 4
XXX = Other**

VALVE SERIES

DPW = Dual Plate Wafer check, ANSI rated 5050, 5051, 5053, 8055
EHF = Elastomer Hinge Flanged 5001, 5003, 5004, 5102, 5107, 5118, 5117
EHW = Elastomer Hinge Short Form Wafer 5005, 5412, 5118, 5431, 5355, 5296, 5965, 5981, 5297(300#)
EHL = Elastomer Hinge Short Form Lug (5463) 5463-300
EHB = Elastomer Hinge Long Pattern flanged (5081) (for direct flanging to b'fly valves) 5081-R (RF), 5081-F (FF)
EHT = Elastomer Hinge Threaded valve (5000, 5002) (includes threaded inlet/victaulic outlet)
EHV = Elastomer Hinge Victaulic grooved valve (5103)
EHP = Elastomer Hinge Plain end valve (5104)
EHS = Elastomer Hinge Sanitary ends (5922)
SCW = Swing Check metal wafer valves, ANSI (1200)
SCN = Narrow profile swing check valves (100, 110)
BFW = Butterfly Wafer valve (6100)
BFL = Butterfly Lug valve (6200)
XXX = Other**

BODY MATERIAL

A2 = Alloy 20, A743 CN-7M
AB = Alum Bronze, B148 C952 Gr.A
AL = Aluminum, B26 Alloy 319 or 356-T6 or B241 6061-T6 as req'd.
BR = Brass, B43 Alloy 230
BZ = Bronze, B62 C836 (85-5-5-5)
CI = Cast Iron, A126 Class B
CP = CPVC, Type IV, Grade 1
CS = Carbon Steel, A53 or A106 Grade B
DI = Ductile Iron, A395 Gr. 60-40-18
DS = Duplex SS
HB = Hastelloy B
HC = Hastelloy C, A494 Gr. CW-12MW
LC = LCB Cast Steel
M4 = Monel 400, A994, M35-1
M5 = Monel K500
PP = Polypropylene
PC = PVC, Type I, Grade 1
PD = PVDF (Kynar)
PS = Plated Carbon Steel
T2 = Titanium, B367 Gr. C-2
WC = Cast Steel, A216 Grade WCB
34 = 304 SS, A351 Grade CF8
36 = 316 SS, A351 Grade CF8M
42 = 410 SS, A217 Grade CA15
4L = 304L SS
6L = 316L SS, A351 Grade CF3M
XX = Other**

INTERNALS MATERIAL*

A2 = Alloy 20, A743 CN-7M
AB = Alum Bronze, B148 C952 Gr.A
AL = Aluminum, B26 Alloy 319 or 356-T6 or B241 6061-T6 as req'd.
BR = Brass
BZ = Bronze, B62 C836
CI = Cast Iron, A126 Class B
CP = CPVC, Type IV, Grade 1
CS = Carbon Steel
DI = Ductile Iron, A395 Gr. 60-40-18
DS = Duplex SS
HB = Hastelloy B
HC = Hastelloy C, A494 Gr. CW-12MW
LC = LCB Cast Steel
M4 = Monel 400
M5 = Monel K500
PP = Polypropylene
PC = PVC, Type I, Grade 1
PD = PVDF (Kynar)
PS = Plated Carbon Steel
T2 = Titanium, B367 Gr. C-2
WC = Cast Steel, A216 Grade WCB
34 = 304 SS, A351 Grade CF8
36 = 316 SS, A351 Grade CF8M
42 = 410 SS, A217 Grade CA15
4L = 304L SS
6L = 316L SS, A351 Grade CF3M
XX = Other**

SEAL MATERIAL

B = Buna N
C = Armalon with teflon layers***
U = EPDM
E = Butyl
H = Hypalon
M = Metal
N = Neoprene
S = Silicone
T = Teflon
V = Viton A
W = Food Grade white neoprene
X = Other**

*** On valves 2.5" and smaller, the armalon layer is omitted and two layers of reinforced teflon fabric remain.

SPRING MATERIAL

32 = 302 SS
36 = 316 SS
HB = Hastelloy B
HC = Hastelloy C
60 = Inconel 600
75 = Inc X-750
M4 = Monel 400
NS = No Spring
XX = Other**

VALVE RATING

A12 = ANSI 125
A16 = ANSI 150
A30 = ANSI 300
A60 = ANSI 600
030 = 30 WOG
050 = 50 WOG
100 = 100 WOG
125 = 125 WOG
150 = 150 WOG
300 = 300 WOG
450 = 450 WOG
XXX = Other**

END CONNECTIONS

RF = Raised face
FF = Flat face
MP = Male Threaded Ends
MV = MTE Inlet/Victaulic out
FP = Female Threaded Ends
TC = Tri-Clamp ends
VC = Victaulic Grooved
PE = Plain ends
XX = Other**

OPTIONS

Consult factory for options such as:

Epoxy coat
Drain holes
Bypass holes
Special ports
Special Paint
Fasteners

*INTERNALS ARE DEFINED AS FOLLOWS:
(Remaining internal hardware is 316 SS unless otherwise specified.)
Dual Plate check valves: Valve plates
Elastomer Hinge check valves: Valve plates, clamp plates, hinge post, and hinge clamp
Swing Check valves: Disc
Butterfly valves: Disc
**Other: "X" or "XX" or "XXX" indicates a choice other than standards shown.
Techno assigns option suffix numbers to identify special valves.

Once an option number is assigned to specify the special valve, that number can then be used to reorder an identical valve. Consult factory for options

SIZE	VALVE SERIES	BODY MATERIAL	INTERNAL MATERIALS	SEAL MATERIAL	SPRING MATERIAL	VALVE RATING	END CONNECTIONS	OPTIONS
Sample: 6.0	EHT	CS	PS	B	32	150	MP	145

VICTAULIC® IS AN ISO 9001 CERTIFIED COMPANY

Style 77 Standard Flexible Coupling

PRODUCT DESCRIPTION

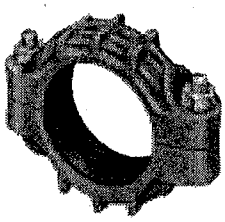

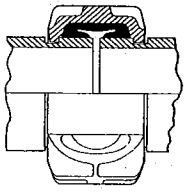

Exaggerated for clarity

See Victaulic publication 10.01 for details.

Style 77 couplings are designed with cross-ribbed construction to provide a strong component for pressure piping systems. Sizes 3/4 -12" (20 - 300 mm) are two-piece housings. Sizes 14 - 22" (350 - 550 mm) are cast in four identical segments, with larger sizes cast in six segments. This eases handling and assures concentricity.

All sizes are provided with plated bolts and nuts. Galvanized and stainless steel housings are also available.

Independent testing has shown the Style 77 coupling to be an effective stress relief and vibration attenuation device providing performance superior to braided steel and elastomeric arch-type connectors when used in close proximity to the source of vibration. Refer to 26.04 for vibration information.

Independent testing has shown that Victaulic Style 77 and 75 flexible couplings and Style 07 Zero-Flex® rigid couplings provide exceptional functionality during and after earthquake conditions. Refer to 26.05 for further information.

DIMENSIONS

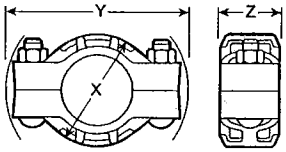

3/4 - 12" Sizes

Pipe Size Nominal Diameter In./mm	Pipe Size Actual Out. Dia. In./mm	Max. Work Pres. PSI* kPa	Max. End Load Lbs.* N	Allow. Pipe End † Sep. In./mm	Deflect. Fr. C_L † Per Cplg. Deg.	Deflect. Fr. C_L † Pipe In./Ft. mm/m	@ Bolt/Nut No. - Size Inches mm	Dimensions Inches/millimeters X	Y	Z	Aprx. Wgt. Each Lbs. kg
3/4 20	1.050 26,7	1,000 6900	865 3850	0 - 0.06 0 - 1,6	3° – 24′	0.72 60	2 - 3/8 X 2	2.13 54	4.00 102	1.75 44	1.1 0,5
1 25	1.315 33,4	1,000 6900	1,360 6050	0 - 0.06 0 - 1,6	2° – 43′	0.57 48	2 - 3/8 X 2	2.38 61	4.12 105	1.75 44	1.2 0,5
1 1/4 32	1.660 42,2	1,000 6900	2,160 9610	0 - 0.06 0 - 1,6	2° – 10′	0.45 38	2 - 1/2 X 2 1/2	2.65 67	5.00 127	1.88 48	2.0 0,9
1 1/2 40	1.900 48,3	1,000 6900	2,835 12615	0 - 0.06 0 - 1,6	1° – 56′	0.40 33	2 - 1/2 X 2 1/2	3.13 79	5.38 137	1.88 48	2.1 1,0
2 50	2.375 60,3	1,000 6900	4,430 19715	0 - 0.06 0 - 1,6	1° – 31′	0.32 26	2 - 1/2 X 2 1/2	3.63 92	5.88 149	1.88 48	2.6 1,2
2 1/2 65	2.875 73,0	1,000 6900	6,490 28880	0 - 0.06 0 - 1,6	1° – 15′	0.26 22	2 - 1/2 X 2 3/4	4.25 108	6.50 165	1.88 48	3.1 1,4
76,1 mm	3.000 76,1	1,000 6900	7,070 31460	0 - 0.06 0 - 1,6	1° – 12′	0.26 22	2 - 1/2 X 2 3/4	4.38 111	6.63 168	1.88 48	3.2 1,5
3 80	3.500 88,9	1,000 6900	9,620 46810	0 - 0.06 0 - 1,6	1° – 2′	0.22 18	2 - 1/2 X 2 3/4	5.00 127	7.13 181	1.88 48	3.7 1,7
3 1/2 90	4.000 101,6	1,000 6900	12,565 55915	0 - 0.06 0 - 1,6	0° – 54′	0.19 16	2 - 5/8 X 3 1/4	5.63 143	8.25 210	1.88 48	5.6 2,5
4 100	4.500 114,3	1,000 6900	15,900 70755	0 - 0.13 0 - 3,2	1° – 36′	0.34 28	2 - 5/8 X 3 1/4	6.13 156	8.88 226	2.13 54	6.7 3,0
108,0 mm	4.250 108,0	1,000 6900	14,180 63100	0 - 0.13 0 - 3,2	1° – 41′	0.35 29	2 - 16 X 82.5	6.00 152	8.63 219	2.13 54	11.0 5,0
5 125	5,563 141,3	1,000 6900	24,300 108135	0 - 0.13 0 - 3,2	1° – 18′	0.27 23	2 - 3/4 X 4 1/4	7.75 197	10.65 270	2.13 54	10.6 4,8
133,0 mm	5.250 133,0	1,000 6900	21,635 96275	0 - 0.13 0 - 3,2	1° – 21′	0.28 24	2 - 20 X 108	7.63 194	10.38 264	2.13 54	10.0 4,5
139,7 mm	5.500 139,7	1,000 6900	23,745 105665	0 - 0.13 0 - 3,2	1° – 18′	0.28 24	2 - 20 X 108	8.63 219	10.65 270	2.13 54	10.0 4,5
6 150	6.625 168,3	1,000 6900	34,470 153390	0 - 0.13 0 - 3,2	1° – 5′	0.23 18	2 - 3/4 X 4 1/4	8.63 219	11.88 302	2.13 54	12.0 5,4
159,0 mm	6.250 159,0	1,000 6900	30,665 136460	0 - 0.13 0 - 3,2	1° – 9′	0.24 20	2 - 20 X 108	8.63 219	11.50 292	2.13 54	13.2 6,0
165,1 mm	6.500 165,1	1,000 6900	33,185 147660	0 - 0.13 0 - 3,2	1° – 6′	0.23 19	2 - 3/4 X 4 1/4	8.88 226	11.63 295	2.13 54	13.2 6,0

Table continued on page 2.

*†@ Refer to notes on page 2.

® REGISTERED TRADEMARK OF VICTAULIC – © COPYRIGHT 2003 VICTAULIC – PRINTED IN U.S.A.

Victaulic Company of America • Phone: 1-800-PICK-VIC (1-800-742-5842) • Fax: 610-250-8817 • e-mail:pickvic@victaulic.com
Victaulic Company of Canada • Phone: 905-884-7444 • Fax: 905-884-9774 • e-mail: viccanada@victaulic.com
Victaulic Europe • Phone:32-9-381-1500 • Fax: 32-9-380-4438 • e-mail: viceuro@victaulic.be
Victaulic America Latina • Phone: 610-559-3300 • Fax: 610-559-3608 • e-mail: vical@victaulic.com
Victaulic Asia Pacific • Phone: 65-6235-3035 • Fax: 65-6235-0535 • e-mail: vicap@victaulic.com

Victaulic®

DIMENSIONS

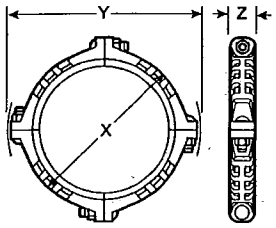

14 - 22" Sizes

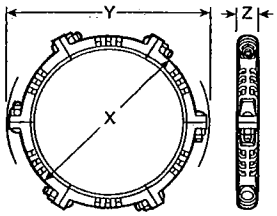

24" Sizes

Pipe Size Nominal Diameter In./mm	Pipe Size Actual Out. Dia. In./mm	Max. Work Pres. PSI* kPa	Max. End Load Lbs.* N	Allow. Pipe End † Sep. In./mm	Deflect. Fr. C_L † Per Cplg. Deg.	Deflect. Fr. C_L † Pipe In./Ft. mm/m	@ Bolt/Nut No. - Size Inches mm	Dimensions Inches/millimeters X	Y	Z	Aprx. Wgt. Each Lbs. kg
8 § 200	8.625 219,1	800 5500	46,740 207995	0 - 0.13 0 - 3,2	0° – 50′	0.18 14	2 - 7/8 X 5	11.00 279	14.75 375	2.50 63	20.8 9,4
10 § 250	10.750 273,0	800 5500	73,280 326100	0 - 0.13 0 - 3,2	0° – 40′	0.14 12	2 - 1 X 6	13.63 346	17.13 435	2.63 67	31.1 14,1
12 § 300	12.750 323,9	800 5500	102,000 453900	0 - 0.13 0 - 3,2	0° – 34′	0.12 9	2 - 1 X 6½	15.63 397	19.25 489	2.63 67	27.8 12,6
14 350	14.000 355,6	300 2065	46,180 205500	0 - 0.13 0 - 3,2	0° – 31′	0.11 9	4 - 1 X 3½	16.63 422	19.88 505	2.88 73	35.6 16,1
15 375	15.000 381,0	300 2065	53,000 235850	0 - 0.13 0 - 3,2	0° – 29′	0.10 9	4 - 1 X 5½	17.88 454	21.63 549	3.00 76	48.8 22,1
16 400	16.000 406,4	300 2065	60,320 268425	0 - 0.13 0 - 3,2	0° – 27′	0.10 9	4 - 1 X 3½	19.00 482	22.13 562	3.00 76	51.1 23,2
18 450	18.000 457,2	300 2065	76,340 339710	0 - 0.13 0 - 3,2	0° – 24′	0.08 7	4 - 1 X 3½	21.38 543	24.50 622	3.13 80	64.4 29,2
20 500	20.000 508,0	300 2065	94,000 418300	0 - 0.13 0 - 3,2	0° – 22′	0.08 7	4 - 1⅛ X 4	23.63 600	27.25 692	3.13 80	91.2 41,4
22 550	22.000 559,0	300 2065	114,000 507300	0 - 0.13 0 - 3,2	0° – 19′	0.07 6	4 - 1⅛ X 4	25.75 654	29.50 749	3.13 80	92.0 41,7
24 600	24.000 609,6	250 1725	113,000 502850	0 - 0.13 0 - 3,2	0° – 18′	0.07 6	6 - 1⅛ X 4	27.75 704	31.25 794	3.13 80	94.0 42,6

§ Couplings 8, 10, 12" (200, 250, 300 mm) sizes available to JIS standards. Refer to Section 06.17 for details.
*†@ Refer to notes below.

NOTES

* Working Pressure and End Load are total, from all internal and external loads, based on standard weight (ANSI) steel pipe, standard **roll** or **cut** grooved in accordance with Victaulic specifications. Contact Victaulic for performance on other pipe.

WARNING: FOR ONE TIME FIELD TEST ONLY, the Maximum Joint Working Pressure may be increased to 1½ times the figures shown.

† Allowable Pipe End Separation and Deflection figures show the maximum nominal range of movement available at each joint for standard **roll** grooved pipe. Figures for standard **cut** grooved pipe may be doubled. These figures are maximums; for design and installation purposes these figures should be reduced by: 50% for 3/4 - 3½" (20 - 90 mm); 25% for 4" (100 mm) and larger.

@ Number of bolts required equals number of housing segments.

Metric thread size bolts are available (color coded gold) for all coupling sizes upon request. Contact Victaulic for details.

WARNING: Depressurize and drain the piping system before attempting to install, remove, or adjust any Victaulic piping products.

MATERIAL SPECIFICATIONS

Housing: Ductile iron conforming to ASTM A-395, grade 65-45-15, and ASTM A-536, grade 65-45-12.

Housing Coating: Orange enamel

- **Optional:** Hot dipped galvanized and others

Coupling Gasket: (specify choice*)†

- **Grade "E" EPDM**
  EPDM (Green color code). Temperature range –30°F to +230°F (–34°C to +110°C). Recommended for hot water service within the specified temperature range plus a variety of dilute acids, oil-free air and many chemical services. UL classified in accordance with ANSI/NSF 61 for cold +86°F (+30°C) and hot +180°F (+82°C) potable water service. NOT RECOMMENDED FOR PETROLEUM SERVICES.
- **Grade "T" nitrile**
  Nitrile (Orange color code). Temperature range –20°F to +180°F (–29°C to +82°C). Recommended for petroleum products, air with oil vapors, vegetable and mineral oils within the specified temperature range. Not recommended for hot water services over +150°F (+66°C) or for hot dry air over +140°F (+60°C).

*Services listed are General Service Recommendations only. It should be noted that there are services for which these gaskets are not recommended. Reference should always be made to the latest Victaulic Gasket Selection Guide for specific gasket service recommendations and for a listing of services which are not recommended.

Bolts/Nuts: Heat treated carbon steel, zinc electroplated to ASTM B633, track-head conforming to physical properties of ASTM A-183 minimum tensile 110,000 psi (758340 kPa).

†Supplemental lubricant is recommended for services installed at or continuously operating below 0°F (–18°C).

- **Optional:** Type 316 stainless steel, Grade B-8M, Class 2.

This product shall be manufactured by Victaulic Company. All products to be installed in accordance with current Victaulic installation/assembly instructions. Victaulic reserves the right to change product specifications, designs and standard equipment without notice and without incurring obligations.

ATTACHMENT 8:
O&M MANUAL FOR PV-810 GRANULAR ACTIVATED CARBON SYSTEM

OPERATION & MAINTENANCE MANUAL

FOR

PV-810 PRESSURE GRANULAR ACTIVATED CARBON ADSORPTION SYSTEM

USFilter WESTATES

Battelle Memorial Institue

JPL – Pasadena, CA

BY

USFILTER WESTATES
11711 Reading Road
Red Bluff, CA 96080

November 2004

TABLE OF CONTENTS

1.0 INTRODUCTION 1

1.1 Glossary 2

1.2 Important Messages and Warnings 3

1.3 Receiving 4

1.4 Unloading and Handling 4

1.5 Assembly Instructions 5

2.0 EQUIPMENT DESCRIPTION 6

2.1 General Description 6

2.2 Process Description 7

2.3 Operating Descriptions 8

2.4 General Process Comments 9

3.0 START-UP 9

3.1 Safety 9

3.2 Oxygen Demand Created by Activated Carbon in Confined Vessels. 12

3.3 Filling the Adsorbers 13

3.4 Initial Backwash 14

3.5 Placing the System in Operation 15

3.6 Backwash 16

3.7 Spent Carbon Removal 16

TABLE OF CONTENTS (Continued)

4.0 TROUBLESHOOTING 17

5.0 SYSTEM MONITORING 19

6.0 GENERAL CARBON SYSTEM INFORMATION 20

6.1 Temporary Shutdowns 20

6.2 Extended Shutdowns 20

6.3 Emergency Procedures 20

6.4 WESTATES Contacts. 20

7.0 MAINTENANCE 21

7.1 Monitor Maintenance 21

7.2 Major Maintenance 21

7.3 Spare Parts 21

SPECIFICATION SHEETS

ACNS GAC Specification

Material Safety Data Sheets

Drawings

Product Data Sheets

1.0 INTRODUCTION

This manual covers a general description of the equipment and operating procedures for a Pressure Carbon Adsorption System. The Carbon System is designed to provide many years of trouble free service. To achieve this, the Carbon System equipment must be properly handled and installed to obtain the desired results. Failure to do so can cause premature equipment malfunctions and/or undesirable System performance.

The Purchaser is fully responsible for proper inspection, handling, installation, and backwashing of the Carbon System equipment, and shall insure that quality workmanship practices and construction procedures are followed throughout. The Purchaser also accepts all liability for the loss of or damage to any equipment resulting from the improper handling and/or installation, regardless of the inclusion or omission of any applicable suggestions in this manual. Unknown situations or conditions not covered in this manual are the responsibility of the Purchaser.

Section 1.4 provides helpful information for the receiving, unloading, handling and installation of the Carbon System equipment.

1.1 GLOSSARY

Adsorber - A vessel designed to hold activated carbon.

Backwash - Performed prior to placing system on-line to cleanse the carbon bed of fines entrapped air and stratify bed depth. Also used during normal operations to remove particulate build up.

Backflush - Performed during normal operations to remove entrapped air from the carbon bed.

Bulk Transport Trailer - Hopper type trailer used to transport carbon, slurry in fresh carbon, and remove spent carbon from adsorbers.

Carbon Rinse - Plant water used to rinse from the interior surface of the adsorber during carbon change-out.

GAC - Granular Activated Carbon.

Heel - Any spent carbon not removed from an adsorber before adding fresh carbon.

Lead Adsorber - The first bed of carbon through which a process or a waste stream is passed. (Also called Primary Adsorber.)

Polishing Adsorber - The second or last bed of carbon through which a process or a waste stream is passed. (Also called Secondary Adsorber.)

Pneumatic Port – The air and water connection for service and wash-down of vessel.

Pressure Port - The air and water connection for service and wash-down of vessel.

Rupture Disk - A relief disk to prevent over pressurization of a vessel.

Reactivated Carbon - Previously used carbon that has been thermally reactivated.

Spent Carbon - Carbon that has adsorbed the maximum amount of organic material.

Underdrain - Device designed to permit an evenly distributed flow of water but retain carbon in vessel.

Utility Port - The air and water connection for service and wash-down of vessel.

Vent - A line from each adsorber with automatic vacuum/air release valve (APCO).

Water Cushion - The water added to an adsorber before charging it with carbon to protect under drain and lining.

1.2 IMPORTANT MESSAGES AND WARNINGS

This Manual should be in the possession of the personnel who operate and maintain the Carbon System. The purpose of this manual is for instruction and to advise operators and maintenance personnel. This manual will remain a valuable resource for the safe, economical, efficient operation and maintenance of the Carbon System.

Failure to properly follow instructions, failure to take notice of warnings, and failure to take proper precautions and preventive measures may be dangerous and could cause serious injury, equipment damage, and environmental problems.

Mechanical modifications or substitutions of parts on equipment that may affect structural or operational safety shall not be made without prior manufacturer's approval or engineer's advice. Modifications other than those approved may defeat protective features originally designed into the equipment and its controls; and therefore, shall not be made.

Unauthorized personnel should be kept away from this equipment at all times. Only qualified personnel who have been properly instructed in this equipment's proper operation and maintenance requirements and in its potential hazards shall be allowed to operate and maintain it.

IMPORTANT

USFILTER/WESTATES MAKES NO WARRANTY OF ANY KIND WITH REGARD TO THE MATERIAL CONTAINED IN THIS MANUAL, INCLUDING, BUT NOT LIMITED TO, IMPLIED WARRANTIES OR FITNESS FOR A PARTICULAR PURPOSE. USFILTER/WESTATES SHALL NOT BE LIABLE FOR ERRORS CONTAINED HEREIN OR FOR INCIDENTAL OR CONSEQUENTIAL DAMAGES IN CONNECTION WITH THE PERFORMANCE OR USE OF THIS MATERIAL.

THIS MANUAL CONTAINS CERTAIN PROPRIETARY CRITERIA, IDEAS AND DESIGNS AS AN INSTRUMENT OR PROFESSIONAL SERVICE AND SHALL NOT BE REPRINTED IN WHOLE OR IN PART WITHOUT EXPRESSED WRITTEN AUTHORIZATION FROM USFILTER/WESTATES.

1.3 RECEIVING

Immediately upon receipt and prior to removal from the truck trailer, railcar or shipping container, inspect the Carbon System equipment for damage. Claiming any damage that may have occurred in transit should be filed promptly with the delivering carrier. The unloading operation should be delayed until the carrier's representative has completed his inspection of the damaged equipment, otherwise a damage claim may not be honored. The inspection should include as a minimum:

1. External surface damage.
2. Damage such as broken nozzles, valves, pipes, underdrain, etc.
3. Equipment damage at contact points.
4. Unpacking and inspection of all packaged equipment and accessories.
5. Internal lining.

1.4 UNLOADING AND HANDLING

When unloading and handling the Carbon System equipment, extreme care should be taken as not to damage it.

Regardless of the type of equipment being handled, certain precautionary measures must be implemented such as:

1. Insure the lifting equipment can withstand the total intended load.
2. Always use lifting eyes and brackets.
3. Never position the lifting equipment where damage to the equipment load may occur.
4. When using a forklift, make sure the forks are long enough to extend past the intended load. This prevents accidental punctures on the underside of the equipment crates, boxes and skids that may damage the equipment itself.
5. Use spreader bars.
6. Do not slide, drag or push equipment across surfaces. Always lift to move into position.
7. Do not roll, drop or throw equipment or accessories.
8. Lifting cables and/or straps must not be attached to, or permitted to come in contact with nozzles, flanges, gussets, pipes, shafts, painted surfaces, or any other accessory that may be damaged by contact.
9. When equipment is being lifted, proper rigging practices should be observed and a guide- line should be attached to prevent impact damage caused by swinging into contact with other object.
10. Never set on or roll over an equipment fitting and never use a fitting as a lifting point.
11. Prevent tools, hooks, etc. from striking the Carbon System equipment.

1.5 ASSEMBLY INSTRUCTIONS

The Carbon System has been shipped pre-assembled to the greatest extent possible. The attached drawing shows the system after assembly. The piping module skid and vessel skids have drilled holes for placement and mounting. The site foundation should be level, but most importantly flat. Check to see if any bolts that may have come loose during shipment, if so, tighten them. The internal nozzles have been shipped installed. Be sure to use proper flange tightening procedures when assembling the piping.

The Carbon System should be assembled in the following order:

1. Mark the foundation with guide-lines in order to place the vessels in a straight line.
2. Located the vessels spaced as shown on drawing.
3. Place the piping module appropriately between the face piping connections.
4. If alignment is off, make sure the vessels and piping module are level and in the correct positions. Some shimming of the vessels and piping module may be required.
5. Bolt Tank A to the piping module (bolt loosely until system is fully assembled).
6. Bolt Tank B to the piping module (bolt loosely until system is fully assembled).
7. If alignment is acceptable, tighten all the bolts.
8. Secure the vessels and piping module to the foundation.
9. Assembly is complete.

2.0 EQUIPMENT DESCRIPTION

2.1 GENERAL DESCRIPTION

The Carbon System consists of (2) two PV-810 carbon adsorber vessels, face piping, and piping module with support skid. The piping system comes complete with influent, effluent, backwash, air vent line, carbon fill, carbon removal, compressed air, and sampling connections.

The carbon steel adsorbers are vertical cylindrical pressure vessels with elliptical tops and bottoms manufactured for a maximum operating pressure of 75 PSIG. The adsorbers are designed for down flow operation with a specially designed underdrain collection system to maximize the utilization of carbon as well as allow for efficient and rapid removal of the spent carbon. Three sample valves are used for sampling treated water at various levels through the adsorber.

The adsorbers are designed with sufficient free board volume to allow for full fluidization during back washing of the carbon bed during start up and in the event an unacceptable pressure drop develops across the bed due to any filterable solids entering the vessels.

The process and utility piping to operate the system are mounted on the adsorbers and piping module. The piping options include valving to operate both adsorbers in parallel or series (lead/lag) flow configuration. Each adsorber has its own carbon fill, discharge and vent lines. The process piping is equipped with pressure gauges and sample ports at the inlet and outlet of each adsorber. Compressed air connections are provided for use during carbon transfer.

2.2 PROCESS DESCRIPTION

The Carbon System is designed to remove dissolved organic compounds from contaminated feed water using granular activated carbon. The feed water to be treated will be pumped by the client at a controlled rate through the adsorbers in a series or parallel configuration.

Depending on the feed water analysis, a pre-filter may be required to remove any suspended solids from the feed water prior to entering the carbon adsorbers.

Each adsorber shall contain 10,000 lbs. of Westates granular activated carbon, which will provide sufficient contact time at the design flow rate to remove the organics in the feed water.

Feed water enters the adsorber from the top and flows down through the carbon bed. The treated water is collected in the underdrain system.

When piped in the series configuration, and the lead adsorber becomes saturated (exhausted) it's taken off-line for replacement of the spent carbon. The feed water is directed to the second adsorber, allowing the system to remain in service. The lead adsorber is then pressurized up to 30 psig with air. With the addition of utility water, the spent carbon is pneumatically displaced as slurry to a bulk transport trailer. The dewatered spent carbon is reactivated.

To refill the adsorber with fresh carbon, the carbon in the trailer is slurried, using clean water, pressurized up to 15 psig and then transferred to the empty adsorber.

Once the fresh carbon is placed in the vessel, it must be soaked and backwashed before the appropriate valves will be opened, placing the vessel with the fresh carbon in the secondary position.

2.3 OPERATING CONDITIONS

The design operating conditions and characteristics for this system are as follows:

Maximum flow rate:	500 gpm per vessel
Superficial surface loading:	5.2 min per vessel @ 500 gpm
Maximum Pressure:	75 psig
Maximum Temperature:	150°F
Carbon content:	10,000 lbs./adsorber
Carbon Type:	ACNS GAC

2.4 GENERAL PROCESS COMMENTS

OPERATIONAL CHANGES

Optimum operation of the system is obtained if changes to the system occur slowly. Rapid changes in flow will cause upsets to the adsorbers, which could adversely affect the operation. Valves should be turned slowly at all times to prevent hydraulic shock.

3.0 START-UP

3.1 SAFETY

Any piece of equipment can be dangerous if operated improperly. Safety is ultimately the responsibility of those operating and maintaining the equipment. All personnel operating and maintaining the Carbon System and its proper implementation must be familiar with all of the Carbon System components, and observe all OSHA, federal, state and local safety codes and requirements. The personnel should also be active participants in an approved plant-wide health and safety program.

Failure to properly follow instructions and failure to take proper safety precautions is dangerous and can cause serious personal injury, needless equipment damage, and unnecessary environmental harm. Mechanical modifications and/or substitutions of parts on equipment that will affect structural, operational, or environmental safety should not be made. Modifications that may defeat protective features originally designed into the equipment and control; and therefore, should not be made.

The following is a partial list of precautions to follow but in no case is the list exhaustive nor is it intended to be. Operators and maintenance personnel should expand on this list after first reviewing the entire Carbon System and its operation with the appropriate health and safety authorities.

- Keep areas clean. A clean work area is a much safer area.
- Keep all equipment guards in place. If removed to service the equipment, make sure the guards are replaced properly.
- Wear eye and face protection around rotating and pumping equipment and whenever working around or handling chemicals. Be especially cautions for splash when disconnecting piping, valves and fittings.
- Wear ear protection if necessary.
- Wear proper apparel. Do not wear loose clothing, or jewelry, which could be caught in machinery.
- Wear a proper respirator around chemicals and in areas where vapors and/or gases may be present.

3.1 SAFETY (continued)

- Non-skid footwear is recommended and always wear protective gloves when feasible.
- Remove adjusting screws or wrenches. Form a habit of checking to see that all tools are removed from equipment.
- Make sure all personnel are familiar with OSHA approved Material Safety Data Sheets for all hazardous materials they may come in contact with.

STAY ALERT

WATCH WHAT YOU ARE DOING

USE COMMON SENSE

DO NOT PERFORM OPERATION OR MAINTENANCE FUNCTIONS WHEN YOU ARE TIRED OR GROGGY

DO NOT ATTEMPT TO SERVICE OR OPERATE MACHINERY YOU ARE NOT FULLY FAMILIAR WITH

DO NOT TAKE CHANCES

ASK FOR ASSISTANCE IF IN DOUBT

DO NOT TRY TO DO IT ALONE

THINK BEFORE YOU ACT AND BE CAREFUL

3.2 OXYGEN DEMAND CREATED BY ACTIVATED CARBON IN CONFINED VESSELS

Research efforts have confirmed that wet granular activated carbon confined in large vessels creates an oxygen demand, which is hazardous to human health and can cause death unless proper safety precautions are observed.

Studies conducted have shown that low oxygen content exists in vessels containing wet carbon. Laboratory experiments conducted since that time also have revealed that commercial activated carbons in a wet or moist condition will lower the oxygen content of an isolated space. Preliminary indications of this research are:

1. The phenomenon occurs with wet activated carbon of all common types.

2. The rate of oxygen uptake naturally varies with the degree of exposure of the wet carbon to the air. Thus, it is relatively rapid in a drained bed.

3. There is some indication of a limit to carbon's capacity for oxygen, but until more is known, it would be prudent to assume that all carbon (fresh, used, reactivated) will also exhibit this characteristic. Similarly, although these tests were run with water, it should be assumed that the phenomenon will occur in other liquid and vapor systems.

NOTE:

ALL CONFINED SPACES, INCLUDING THOSE CONTAINING ACTIVATED CARBON, SHOULD BE PRESUMED TO BE HAZARDOUS. APPROPRIATE SAFETY MEASURES SHOULD ALWAYS BE TAKEN BEFORE ENTERING, AS WELL AS WHEN WORKERS ARE IN A CONFINED SPACE. OSHA REGULATIONS APPLICABLE TO RESPIRATORY PROTECTION IN OXYGEN-DEFICIENT ATMOSPHERES SHOULD BE STRICTLY FOLLOWED.

3.3 FILLING THE ADSORBERS

BULK BAGS

When filling the adsorbers with Bulk Bags the following steps are to be followed:

1. Remove the manway cover in adsorber head (top).
2. Open Vent Valve.
3. Make certain all remaining valves are closed.
4. Fill each adsorber to approximately half capacity with water.
5. Carefully empty the bulk bags into the adsorbers. After emptying eight bags of carbon, check the water level. If carbon is above the water level, add more water as necessary. Carbon should always be placed into the adsorber with a water cushion.
6. After all carbon has been loaded, fill the vessel with water and reinstall the manway cover.
7. With the carbon bed totally covered with water, let carbon bed soak approximately 24 hours to totally dissipate air from the carbon with vent line open.

SLURRY

Carbon is transferred into the vessels from a bulk pneumatic trailer as slurry through the carbon steel transfer lines on the vessels. The vessels must have a water cushion before carbon is transferred. The trailer must be filled with water prior to beginning the transfer sequence. The bulk pneumatic trailer is then pressurized to 30 psig. Slowly fully open the appropriate carbon slurry inlet line. While transferring the carbon, the vent lines shall be fully open. All other valves should be in the closed position. The carbon must be soaked for approximately 24 hours with the vent line open to totally dissipate air from the carbon bed.

3.4 INITIAL BACKWASH

The adsorbers must be backwashed after soaking and prior to being placed in service, to remove carbon fines, entrapped air and to fully stratify the carbon bed. To backwash the adsorption tank, the procedure is described below.

The Purchaser is responsible for performing the initial backwash and providing an ample water supply. The water should be clean water and should not exceed the flow rate stated in 2.3 Operating Conditions.

EACH ADSORBER SHOULD BE BACKWASHED SEPARATELY.

At the start of backwash all valves in the adsorption system are closed. To initiate backwash, the valve sequencing is as follows:

1. Engage backwash water supply in reverse flow from effluent pipe.
2. Slowly open valve A2.
3. Slowly open valve A4. Backwash with 750 gpm for approximately (15-20) minutes or until the water leaving the vessel is clear.
4. Slowly open valve C1 to adjust backwash flow rate.
5. Slowly close valve C1.
6. Slowly close valve A4, then close valve A2.
7. Slowly open valve B2.
8. Slowly open valve B4 and backwash per Step 3.
9. Slowly close valve B4, then close valve B2.
10. Disengage backwash water supply.
11. The system is now ready to be put on-line.

NOTE: PROVISIONS SHOULD BE MADE TO PROPERLY DISPOSE OF THE BACKWASH WATER.

3.5 PLACING THE SYSTEM IN OPERATION

ADSORPTION SYSTEM START-UP

To put the adsorption system on-stream, the procedure is described below.

The feed to the adsorption system is provided by the user's feed pump. The pump must be started and brought up to operating conditions prior to placing the carbon adsorption system in operation. When this has been accomplished, the pump discharge valve is slowly opened. Initially, all valves in the adsorption system are closed. For normal operation through the adsorbers, the valve sequencing is as follows:

START-UP PROCEDURE FOR OPERATION IN PARALLEL

With feed pump connected to influent line and all valves closed:

1. Slowly open valve A1.
2. Manually vent air within the adsorber through the vent valve on Vessel A.
3. Once no air is observed discharging through the vent valve (all water), slowly close the vent valve.
4. Slowly open valve B1, if not in parallel operation see #7.
5. Air within the adsorber should vent through the Vent Valve on Vessel B.
6. Once no air is observed discharging through the vent valve (all water), slowly close the vent valve.
7. Refer to System Flow Diagram and General Arrangement Drawings for the desired valve sequence to put the system in operation, remembering to operate each valve slowly.

Normal operation requires no further changes until breakthrough occurs. When this happens, call the **USFILTER/WESTATES** Service Department at (908) 353-7400 to arrange for a carbon change-out.

Occasionally, particulate builds up on the carbon and it becomes necessary to backwash the units. Refer to Section 3.6 if this happens.

3.6 BACKWASH

If the pressure drop across an adsorber becomes too high (doubling clean bed pressure drop), backwashing may be necessary. To backwash an adsorption tank, the procedure is described below.

It is the purchaser's responsibility to backwash an adsorber and provide ample water for backwashing. The water should be clean water should not exceed the flow rate stated in 2.3 Operating Conditions.

EACH ADSORBER SHOULD BE BACKWASHED SEPARATELY.

1. Isolate the vessel to be backwashed from the process stream.
2. To initiate backwash, follow the valve sequence and flow diagram.
3. Backwash for 10 - 15 minutes.
4. Make sure backwash valves are open for entire cycle.
5. If pressure drop is still unacceptable, repeat or call Westates Customer Service at (908) 353-7400.

NOTE: PROVISIONS SHOULD BE MADE TO PROPERLY DISPOSE OF THE BACKWASH WATER.

3.7 SPENT CARBON REMOVAL

When the lead adsorber becomes saturated (exhausted) it is taken off-line for replacement of the spent carbon. The feed water is directed to the second adsorber, allowing the system to remain in service. The lead adsorber is then pressurized up to 30 psig with air. With the addition of utility water, the spent carbon is pneumatically displaced as slurry to a bulk transport trailer by slowly opening the slurry outlet valve. To remove 10,000 pounds of carbon approximately 5,000 gallons of water is required to keep the spent GAC in slurry to facilitate removal. This will prevent a line clogging.

To refill the adsorber with fresh carbon see Section 3.3.

4.0 TROUBLESHOOTING

The following tables list malfunctions, probable causes, and in most cases, possible corrective action to take for the problem at hand. By no means is this list complete. It is intended only as a guide for the maintenance personnel to help them in properly identifying and isolating equipment malfunctions. If in doubt as to the actual cause of a malfunction, consult the factory or nearest equipment representative for assistance.

ADSORPTION SYSTEM:

MALFUNCTION	PROBLEM CAUSE	CORRECTION ACTION
High pressure drop across adsorber	Bed not flooded Bed air bound	Check to see that the air release valve is operating. Make sure there is a constant flow before valve closes.
	Feed pump pressure too high	Throttle feed pump
	Improper valving	Check valve sequence (see Figure 1). Check for obstructions in transfer lines.
	Particulate build-up on carbon bed	Backwash per Section 3.6
Leaking flange	Loose bolts	Tighten bolts
Discharge Water From the Backwash/Vent Outlet Line	Broken Rupture Disk	Replace Rupture Disk

Battelle Memorial Institue
Jet Propulsion Laboratories
PV-810 Standard Granular Activated Carbon System

MALFUNCTION	PROBLEM CAUSE	CORRECTION ACTION
Leaking Pressure Relief Valve	Leaking or broken Relief Valve	Check to see is carbon has collected on the valve seat. Replace Relief Valve
Carbon in the effluent	Internal mechanical failure	To confirm, open effluent sample valve. Collect 1 qt. Effluent sample to check for carbon. If the test confirms internal failure, call **USFILTER/WESTATES** at (908) 353-7400
Premature breakthrough	Change of influent concentrations	Confirm by checking influent and effluent samples before changing carbon
	Siphoning air in	Check Air Release/Vacuum Relief Valve for correct operation
	Background TOC Colloids	Change carbon
Sudden high contamination level in effluent	Check heel due to improper carbon change-out	Call **USFILTER/WESTATES** service department at (562) 229-9606
Frozen lines, broken gauges and valves	Cold weather	Insulate piping and or heat trace process. Call **USFILTER/WESTATES** at (562) 229-9606
System bacteria infections	Disinfect System	Call **USFILTER/WESTATES** at (562) 229-9606

5.0 SYSTEM MONITORING

It is responsibility of the user to monitor the Carbon System during operation. Spent carbon must be properly profiled according to all applicable regulations prior to reactivation.

The following is a suggested format for an operating log. This list is meant as a suggestion only and is by no means complete. Record each day the following items for each individual Carbon System Vessel:

1. Record all equipment maintenance, calibrations, system cleaning, repairing and any parts replacement.

2. Record any unusual occurrences, shutdowns, breakdowns, etc.

3. Record the date and time when each item is logged.

4. Record the pressure drop across the system daily to indicate if any foreign objects have entered the Carbon System.

6.0 GENERAL CARBON SYSTEM INFORMATION

6.1 TEMPORARY SHUTDOWNS:

For shutdown or intermittent operation, the Carbon System should remain completely full of water and the inlet and outlet should be sealed either by a valve or a cap. Prior to restarting the unit, the Carbon System should be backwashed using two to three bed volumes of water. Failure to backwash may result in a temporary presence of contaminated water at the outlet of the adsorber.

6.2 EXTENDED SHUTDOWNS:

If the Carbon System is shutdown for an extended period of time, the following procedure should be followed to reduce potential degradation of bed life.

Backwash the vessels using two - three bed volumes of water. Drain the Carbon System of all water. There should be no free standing water left in the vessel. All valves, manways, and vents shall be tightly sealed for the duration of the shutdown to eliminate any supply of oxygen that would promote biological growth. Prior to re-commissioning the units, follow the start-up instructions included.

6.3 EMERGENCY PROCEDURES

In the event something should occur to cause a shutdown of an adsorber, the operation shall be switched over to the other adsorber and steps shall be taken immediately to remedy the situation.

If a major leak or failure occurs which would cause the Carbon System to be inoperative, then the feed to the system should be shut down immediately. If repairs are beyond the scope of the plant operators, the customer service department at Westates should be contacted immediately.

6.4 WESTATES CONTACTS - HOW TO OBTAIN HELP AND INFORMATION

USFILTER/WESTATES
Santa Fe Springs, CA

Main Office Phone: (562) 229-9606
Main Office Fax: (562) 229-9322

7.0 MAINTENANCE

7.1 MINOR MAINTENANCE

Minor maintenance is that maintenance to be performed by the plant to ensure continuous and effective operation. This maintenance includes visual check of pressure gauges and adjustments to valves and regulators, tightening flanges and connections to eliminate leakage, backwashing, etc.

7.2 MAJOR MAINTENANCE

Major maintenance is that effort needed to repair or replace equipment in order to continue system operation. The need for major maintenance would result from a major malfunction causing the system to be inoperative. Major maintenance also refers to system design changes and/or maintenance requiring downtime. Westates can be contacted when any major maintenance is called for.

7.3 SPARE PARTS

For specific information on part numbers, please refer to the Data Sheets located in the following section of this manual.

UNITED STATES FILTER CORPORATION

WESTATES CARBON
5375 SOUTH BOYLE AVENUE
LOS ANGELES, CA 90058

TOLL FREE 800.659.1771
TELEPHONE 323.722.7500
FACSIMILE 323.277.4184

CARBON SPECIFICATION

AQUACARB NS

(Formerly LBR830)

(Reactivated)

ANALYSIS	SPECIFICATIONS
Type	Reactivated Bituminous Coal
PSD, U.S. Standard Mesh Size	8x30 mesh, 5% max over, 5% max under
Mean Particle Diameter, mm	1.2 – 1.5
Iodine Number, mgI_2/g	850 min
Abrasion Number, wt. %	75 min
Moisture as Packed, wt. %	2% max
Apparent Density, g/cc	0.45 - 0.49

PV10000 SYSTEM PRESSURE DROP

SERIES FLOW 8X30 CARBON 60°F

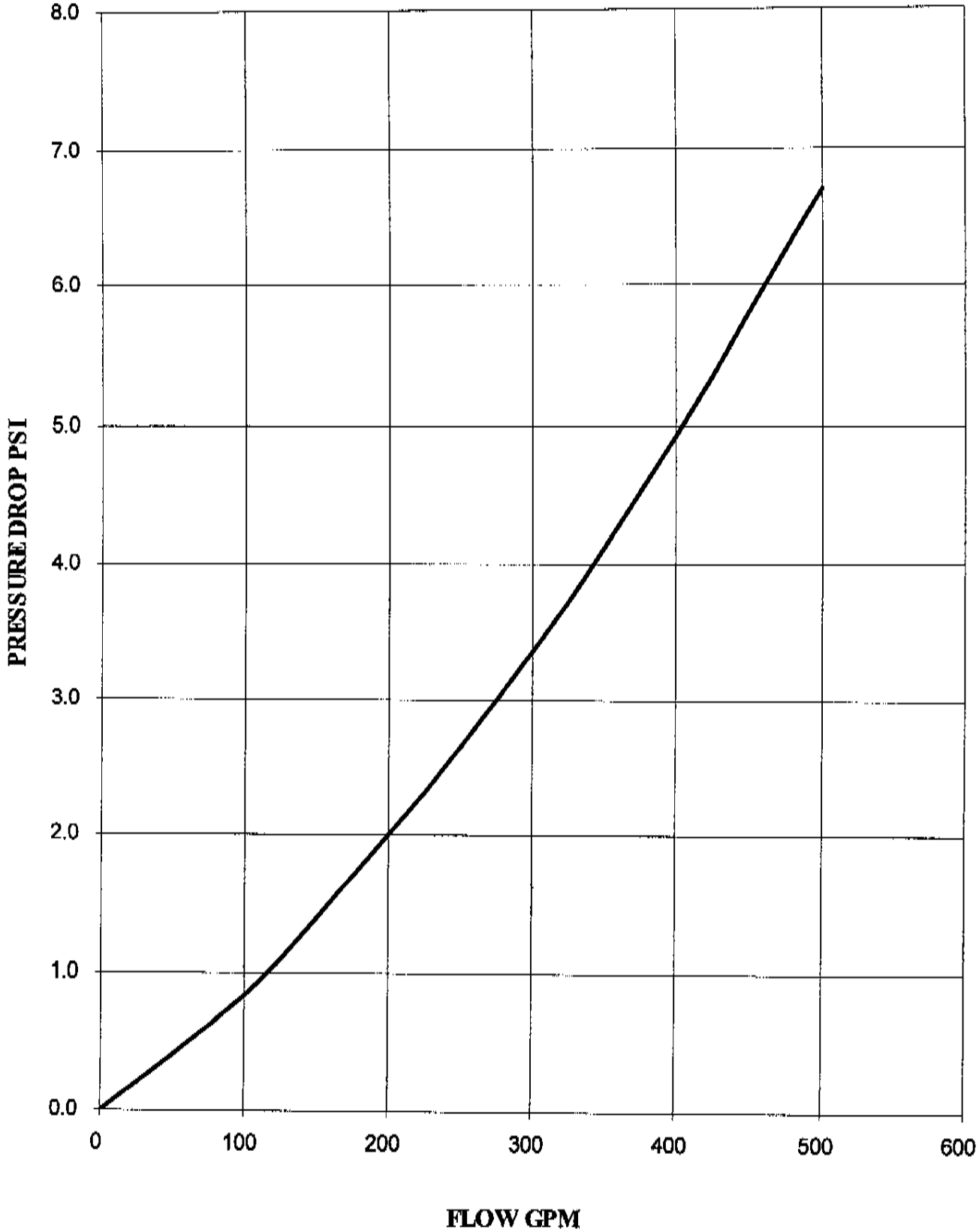

USFilter

Material Safety Data Sheet

SECTION 1 – CHEMICAL PRODUCT AND COMPANY INFORMATION

****

Product Name: ACTIVATED CARBON, *SCC SERIES, SKG SERIES, SKP SERIES, WRPAC*
Part Number: 100 **Chemical Family**: activated carbon

Manufacturer's Name: U.S. FILTER WESTATES CARBON
Address: 5375 South Boyle Avenue, Los Angeles, CA 90058
Product/Technical Information Phone Number: (323) 277-1500
Medical/Handling Emergency Phone Number: CHEMTREC 1-800-424-9300
Transportation Emergency Phone Number: CHEMTREC 1-800-424-9300

Revision Date/Revision Number: September 18, 2000/#7

SECTION 2 – COMPOSITION INFORMATION

****

Chemical Name	Percent by Weight	CAS#
Activated Carbon	100	7440-44-0

SECTION 3 – HAZARDS IDENTIFICATION

****

Appearance & Odor: black granules without taste or odor
Emergency Overview: Dust that contacts eyes may be irritating or cause mechanical injury. Dust may cause slight skin irritation. Dust may be irritating to the respiratory tract and cause coughing or sneezing. Ingestion of powder may be irritating to the gastrointestinal tract. Warning: Wet activated carbon depletes oxygen from the air and therefore dangerously low levels of oxygen may be encountered. Whenever workers enter a vessel containing activated carbon, the vessel's oxygen content should be determined and work procedures for potentially low oxygen areas should be followed.
Fire &Explosion Hazards: When burned, hazardous products of combustion including carbon oxides can occur. Irritating and/or toxic gases due to decomposition of the product may be generated during a fire. Fight fire from a safe distance from a protected location. Contact with strong oxidizers such as ozone or liquid oxygen may cause rapid combustion.
Primary Route(s) of Exposure: Eye contact, skin contact, ingestion, or inhalation are all possible routes of entry.
Inhalation- Acute Effects: Dust may be irritating to the respiratory tract and cause coughing or sneezing.
Skin Contact-Acute Effects: Dust may cause slight skin irritation.

SECTION 3 – HAZARDS IDENTIFICATION (cont.)

****

Eye Contact- Acute Effects: Dust that contacts eyes may be irritating or cause mechanical injury.
Ingestion- Acute Effects: Ingestion of powder may be irritating to the gastrointestinal tract.

SECTION 4 – FIRST AID MEASURES

****

Inhalation First Aid: Remove affected person from area to fresh air and provide oxygen if breathing is difficult. Give artificial respiration ONLY if breathing has stopped and give CPR ONLY if there is no breathing and no pulse. Obtain medical attention.
Skin Contact First Aid: Wash skin for 5 minutes with flowing water and soap. Clothing should be discarded or washed before reuse. Obtain medical assistance if irritation develops. DO NOT instruct person to neutralize affected skin area.
Eye Contact First Aid: Immediately irrigate eyes with flowing water continuously for 15 minutes while holding eyes open. Contacts should be removed before or during flushing. Seek medical assistance if irritation develops. DO NOT instruct person to neutralize.
Ingestion First Aid: Vomiting may need to be induced if directed by a physician or poison control center. DO NOT have unqualified personnel induce vomiting. Obtain medical attention immediately.
Medical Conditions Aggravated: Respiratory ailments may be aggravated by exposure to this product.
Note to Physician: No specific antidote, treat patient symptomatically.

SECTION 5 – FIRE FIGHTING MEASURES

****

Flash Point/Method: Nonflammable
Auto Ignition Temperature: 840°C (1,710°F)
Upper/Lower Explosion Limits: not applicable

Extinguishing Media: Water spray, carbon dioxide, foam or dry chemical
Fire Fighting Procedures: In the event of a fire, wear full protective clothing and NIOSH approved self-contained breathing apparatus with full face piece, operated in the positive pressure mode.
Fire & Explosion Hazards: When burned, hazardous products of combustion including carbon oxides can occur. Irritating and/or toxic gases due to decomposition of the product may be generated during a fire. Fight fire from a safe distance from a protected location. Contact with strong oxidizers such as ozone or liquid oxygen may cause rapid combustion.
Hazardous Products of Decomposition and /or Combustion: Carbon oxides.

NFPA Ratings:

HEALTH-1 FLAMMABILITY- 0 REACTIVITY-0 OTHER- none

SECTION 6 – ACCIDENTAL RELEASE MEASURES

****

Clean up spills in a manner that does not disperse dust into the air. Handle in accordance with good industrial hygiene and safety practices. These practices include avoiding unnecessary exposure, and removal of material from eyes, skin, and clothing. Dispose of virgin (unused) carbon (waste or spillage) in a facility permitted for non-hazardous wastes. Spent (used) carbon should be disposed of in accordance with applicable laws. Do not reuse empty bags. Dispose of in facility permitted for non-hazardous wastes. DO NOT DUMP INTO ANY SEWERS, ON THE GROUND OR INTO ANY BODY OF WATER. All disposal methods must be in compliance with all Federal, State, Local and Provincial laws and regulations. Regulations may vary in different locations. Waste characterizations and compliance with applicable laws are the responsibility solely of the waste generator.

SECTION 7 – HANDLING AND STORAGE

****

Handling: Avoid dispersion into air. Keep containers dry and closed. Follow good handling and housekeeping practices to minimize spills, generation of airborne dusts, and accumulation of dusts on exposed surfaces. Use with adequate exhaust ventilation to draw dust away from workers' breathing zones. Prevent or minimize exposures to dusts by using appropriate respirators, gloves, and eye protection. Wash exposed skin areas thoroughly with soap and water. Use caution when pouring, using pneumatic transport, swirling, etc. as this material can become electrostatically charged.

Storage: Avoid breaking bags or spilling media so as to avoid possibly creating residual dust. Store in ambient atmospheric conditions. Product should be stored in a closed dry container. Maintain good housekeeping procedures. Store away from strong oxidizers such as ozone, liquid oxygen, chlorine, permanganate, etc.

General Comments: Containers of this material may be hazardous when empty since they retain product residues (dust, solids); observe all warnings and precautions listed for the product.

SECTION 8 –PERSONAL PROTECTION/ EXPOSURE CONTROL

****

Respiratory Protection: Use NIOSH/MSHA approved respiratory protection equipment appropriate to the material and/or its concentration where airborne exposure is likely. If exposures cannot be kept to a minimum with engineering controls, consult manufacturer to determine appropriate type equipment for a given application. Observe respirator use limitations specified by NIOSH/MSHA or the manufacturer.

Skin Protection: Wear appropriate dust resistant clothing and gloves.

Eye Protection: Safety glasses with side shields are recommended for any type of handling. Where eye contact or dusty conditions may be likely, dust tight goggles are recommended.

SECTION 11 – TOXICOLOGICAL INFORMATION (cont.)

****

SKIN CONTACT – Chronic: There are no known chronic dermal effects.
EYE CONTACT – Acute: Eye contact can cause conjunctivitis, epithelial hyperplasia of the cornea, as well as eczematous inflammation of the eyelids.
INGESTION – Acute: Carbon is practically nontoxic. The probable oral lethal dose (human) is greater than 15 g/kg; more than one quart (2.2 lbs) for a 70 kg (150 lb) person.
INGESTION – Chronic: There are no known chronic ingestion effects.
CARCINOGENICITY/MUTAGENICITY: There are no known carcinogenic/mutagenic effects.
REPRODUCTIVE EFFECTS: There are no known reproductive effects.
NEUROTOXICITY: There are no known neurotoxic effects.
OTHER EFFECTS: No other toxic effects of carbon are known.
TARGET ORGANS: Target organs include the respiratory system and the cardiovascular system.

SECTION 12 – ECOLOGICAL INFORMATION

****

This material, in its original state, is not harmful to the environment.

SECTION 13 – DISPOSAL CONSIDERATIONS

****

Clean spills in a manner that does not disperse dust into the air, preferably a wet-down procedure or vacuum. If material is not contaminated, spilled media can be rebagged. Material that cannot be used or chemically reprocessed and empty containers should be disposed of in accordance with all applicable regulations. Product containers should be thoroughly emptied before disposal. Generators of waste material are required to evaluate all waste for compliance with RCRA and any local disposal procedures and regulations. NOTE: State and local regulations may be more stringent than federal regulations.

Warning: Wet activated carbon depletes oxygen from the air and therefore dangerously low levels of oxygen may be encountered. Whenever workers enter a vessel containing activated carbon, the vessel's oxygen content should be determined and work procedures for potentially low oxygen areas should be followed.

SECTION 14 – TRANSPORTATION INFORMATION

****

DOT Shipping Description: Not DOT Regulated

SECTION 8 –PERSONAL PROTECTION/ EXPOSURE CONTROL (cont.)

****

Ventilation Protection: Provide ventilation if necessary to minimize exposure. Dilute ventilation acceptable, but local mechanical exhaust ventilation preferred, if practical, at sources of air contamination such as open process equipment. The following publication offers ventilation guidelines and techniques: "INDUSTRIAL VENTILATION, A MANUAL OF RECOMMENDED PRACTICE" available from the ACGIH.
Other Protection: Safety showers, with quick opening valves which stay open, and eye wash fountains, or other means of washing the eyes with a gentle flow of cool to tepid tap water, should be readily available in all areas where this material is handled or stored. Water should be supplied through insulated and heat-traced lines to prevent freeze-ups in cold weather.

Exposure Limits:
OSHA PEL-TWA: 15 mg/m^3 (total), 5 mg/m^3 (resp)
OSHA PEL-STEL: 10 mg/m^3

SECTION 9 – PHYSICAL AND CHEMICAL PROPERTIES

****

Appearance & Odor: black granules without taste or odor

Vapor Pressure: zero	**Vapor Density (Air=1)**: not applicable
Boiling Point: not applicable	**Melting Point**: not applicable
Specific Gravity: 0.25 - 0.60 g/cc	**Solubility in Water**: Insoluble
Volatile Percentage: 0%	**pH**: not determined
Flash Point/method: Nonflammable	**Auto Ignition Temperature**: 840°C
Upper/Lower Explosion Limits: not applicable	**Other**: none

SECTION 10 – STABILITY AND REACTIVITY

****

Stability: This product is considered stable under the specified conditions of storage, shipment and use.
Incompatibilities: Contact with strong oxidizers such as ozone, liquid oxygen, chlorine, permanganate, etc. may result in rapid combustion. Avoid contact with strong acids.
Polymerization: Hazardous polymerization will not occur.
Decomposition: Hazardous decomposition will produce carbon oxides.
Conditions to avoid: Store away from strong oxidizers such as ozone, liquid oxygen, chlorine, permanganate, etc. Moist air will reduce the operating life.

SECTION 11 – TOXICOLOGICAL INFORMATION

****

INHALATION – Acute: Inhalation of carbon dust is mildly irritating to the lungs and can immediately give rise to an increased mucociliary transport and airway resistance mediated by the vagus. The inhalation LC50 (Rat) is > 64.4 mg/l.
INHALATION – Chronic: There are no known chronic inhalation effects.
SKIN CONTACT – Acute: Skin contact is expected to be slightly irritating. The primary skin irritation index (rabbit) is 0.

SECTION 15 – REGULATORY INFORMATION

****

CERCLA SECTION 103 (40CFR302.4): no RQ: none
SARA SECTION 302 (40CFR355.30): no
SARA SECTION 304 (40CFR355.40): no
SARA SECTION 313 (40CFR372.65): no
SARA HAZARD CATEGORIES, SARA SECTIONS 311/312 (40CFR370.21):
ACUTE: yes CHRONIC: no FIRE: no REACTIVE: no SUDDEN RELEASE: no
OSHA PROCESS SAFETY (29CFR1910.119): no
CALIFORNIA PROPOSITION 65: no

SECTION 16 – OTHER INFORMATION

****

Disclaimer: The information contained herein is based on data considered accurate. However, no warranty is expressed or implied regarding the accuracy of these data or the results to be obtained from the user thereof. It is the buyer's responsibility to ensure that its activities comply with federal, state, provincial and local laws.

Created by: James R. Graham

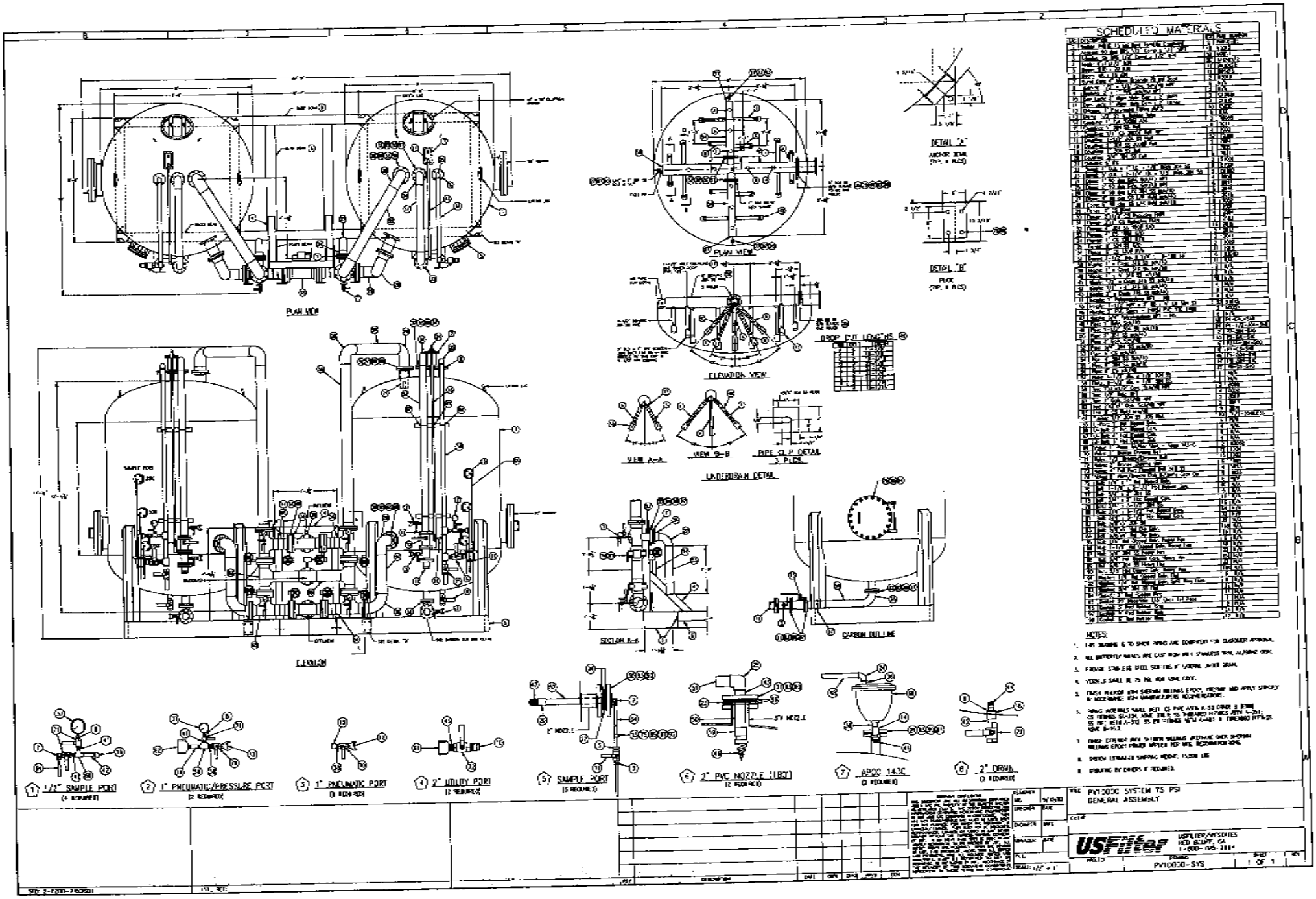
PLAN VIEW
ELEVATION
PLAN VIEW
ELEVATION VIEW
DROP OUT LENGTHS
DETAIL "A"
ANCHOR BOLT
DETAIL "B"
PIPE
VIEW A-A
VIEW B-B
PIPE CLIP DETAIL
UNDERDRAIN DETAIL
SECTION A-A
CARBON OUT LINE
SCHEDULED MATERIALS
NOTES
1/2" SAMPLE PORT
1" PNEUMATIC/PRESSURE PORT
1" PNEUMATIC PORT
2" UTILITY PORT
SAMPLE PORT
2" PVC NOZZLE (1B7)
AP20 143C
2" DRAIN
PV10030 SYSTEM 75 PSI
GENERAL ASSEMBLY
USFilter
PV10030-SYS

STD: 2-0600-8X11A | INTL REF:

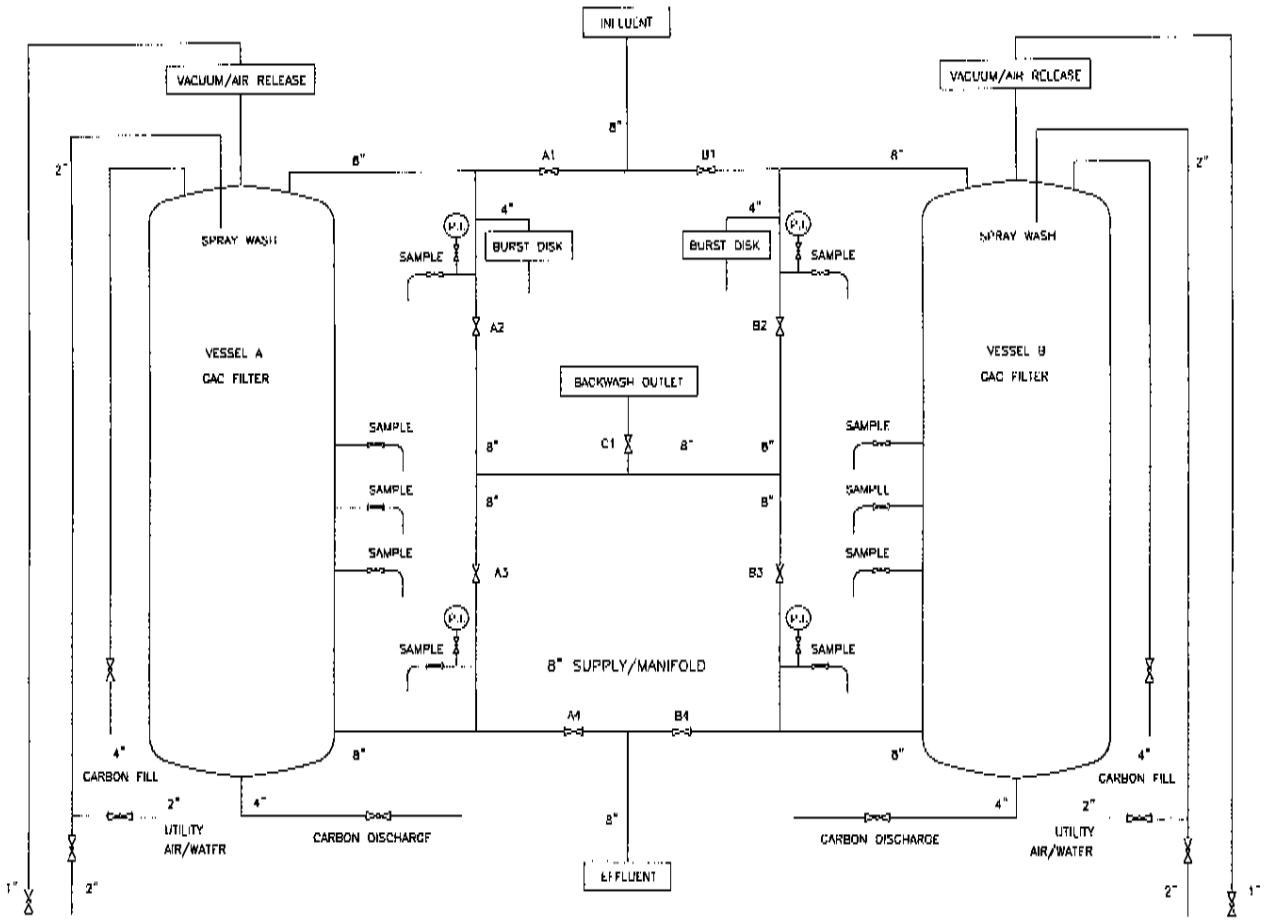

FLOW DIAGRAM

BUTTERFLY VALVE

BALL VALVE

COMPANY CONFIDENTIAL THIS DOCUMENT AND ALL INFORMATION CONTAINED HEREIN ARE THE PROPERTY OF THE USFILTER AND/OR ITS AFFILIATES ("USF"). THE DESIGN CONCEPTS AND INFORMATION CONTAINED HEREIN ARE PROPRIETARY TO USF AND ARE SUBMITTED IN CONFIDENCE. THEY ARE NOT TRANSFERABLE AND MUST BE USED ONLY FOR THE PURPOSE FOR WHICH THE DOCUMENT IS EXPRESSLY LOANED. THEY MUST NOT BE DISCLOSED, REPRODUCED, LOANED OR USED IN ANY OTHER MANNER WITHOUT THE EXPRESS WRITTEN CONSENT OF USF. IN NO EVENT SHALL THEY BE USED IN ANY MANNER DETRIMENTAL TO THE INTEREST OF USF. ALL PATENT RIGHTS ARE RESERVED. UPON THE DEMAND OF USF, THIS DOCUMENT, ALONG WITH ALL COPIES AND EXTRACTS, AND ALL RELATED NOTES AND ANALYSES, MUST BE RETURNED TO USF OR DESTROYED, AS INSTRUCTED BY USF. ACCEPTANCE OF THE DELIVERY OF THIS DOCUMENT CONSTITUTES AGREEMENT TO THESE TERMS AND CONDITIONS.	DESIGNER TAC	DATE 4/27/01	TITLE 3 LEVEL FLOW DIAGRAM
	CHECKER	DATE	CLIENT
	ENGINEER	DATE	USFilter USFILTER/WESTATES RED BLUFF, CA 1-800-795-2664
	MANAGER	DATE	
	FILE:		
	SCALE: NONE		PROJECT / DRAWING 2vesselStdFD / SHEET 1 OF 1 / REV

VALVE SEQUENCE CHART

OPERATION	VALVE NUMBER								
	A1	A2	A3	A4	B1	B2	B3	B4	C1
PARALLEL VESSELS 'A' AND 'B'	O	C	C	O	O	C	C	O	C
VESSEL 'A' ONLY	O	C	C	O	C	C	C	C	C
VESSEL 'B' ONLY	C	C	C	C	O	C	C	O	C
SERIES FLOW VESSEL 'A' THEN 'B'	O	C	O	C	C	O	C	O	C
SERIES FLOW VESSEL 'B' THEN 'A'	C	O	C	O	O	C	C	C	C
BACKWASH VESSEL 'A' AND 'B'	C	O	C	O	C	O	C	O	O
BACKWASH VESSEL 'A'	C	O	C	O	O	C	C	O	O
BACKWASH VESSEL 'B'	O	C	C	O	C	O	C	O	O

O – OPEN C – CLOSED

USFilter

Westates
11711 Reading Road
Red Bluff, CA 96080

Telephone (530) 527-2664
Facsimile (530) 527-8724

PV10000 SYS

SYSTEM SPECIFICATION SUMMARY

PV10000 Liquid Phase Adsorption Systems are designed to treat a wide range of contaminated process streams. Piping and valves are configured for series, parallel, or vessel isolation flows. System includes GAC inlet and outlet piping, and backwash capabilities. The system consists of two adsorbers, skid mounted, with all piping, valves, and gauges assembled for ease of operation. The adsorbers are equipped with underdrains capable of maximum series flow rate of 500 GPM.

EACH VESSEL:

Vessel Diameter ..... 96"
Side Shell Height ..... 84"
Overall Height (Approx.) ..... 15'-5"
Total Empty Weight / Vessel ..... 7000 lbs
Maximum Working Pressure ..... 75 psi @ 150 °F
Manway:
- Flanged at side shell ..... 20"
- Elliptical type at head ..... 14" x 18"

Vessel Volume ..... 3934 gal.
Carbon Capacity ..... 10,000 lbs.
Carbon Bed Volume-Typical ..... 357 Ft^3
Maximum Flow Rate ..... 500 GPM
Empty Bed Contact Time ..... 5.1min/vessel @ 500 GPM
Code Stamping ..... None
Material ..... Carbon Steel
Supports ..... Skid mounted (2 vessels)
Lifting ..... Lifting Lugs
Seismic ..... Zone 4
Interior Surface Prep SSPC-SP5
Interior Surface Coating ..... NSF Epoxy 6-8 mil dft min
Exterior Surface Primer ..... Rust Preventative Epoxy 3 mil min dft
Exterior Surface Coating ..... High Solids Urethane 3mil min dft
Standard Color ..... Blue (Federal Standard 15052)

UNDERDRAINS:

Lateral ..... 304L Stainless Steel
Screens ..... 316L Stainless Steel V-Wire Screens 3" dia x 2"

USFilter

Westates
11711 Reading Road
Red Bluff, CA 96080

Telephone (530) 527-2664
Facsimile (530) 527-8724

SYSTEM SPECIFICATION SUMMARY CON'T

VALVE ASSEMBLY AND PIPING:

Piping:
- Process Piping ..... 6" Schedule 40 Carbon Steel
- GAC Transfer Piping ..... 4" Sch 10 304L Stainless Steel

Valves:
- Process .6" Butterfly, Cast Iron Body w/AL-Brnz Disk, Gear Operator
- GAC Transfer ..... 4" Fanged 316 Stainless Steel Ball Valve
- Vent/Wash ..... 2"Bronze Apollo Ball Valve
- Sample Ports (3) ..... 1/2"Bronze Apollo Ball Valve

SYSTEM WEIGHT:

System Shipping weight (Two Vessels Piping & Manifold).. 15,500 lb
Carbon Weight ..... 20,000 lb
Operating Weight ..... 85,000 lb

ASHCROFT® GENERAL SERVICE GAUGES

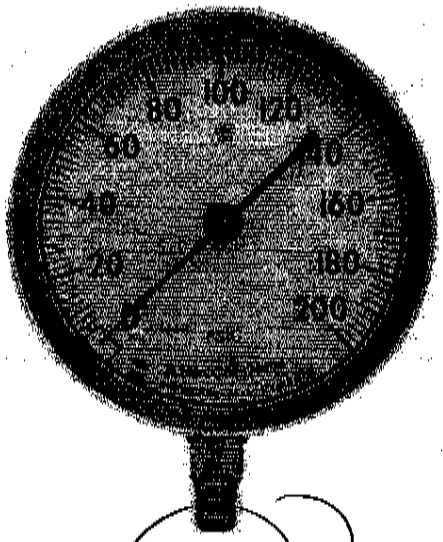

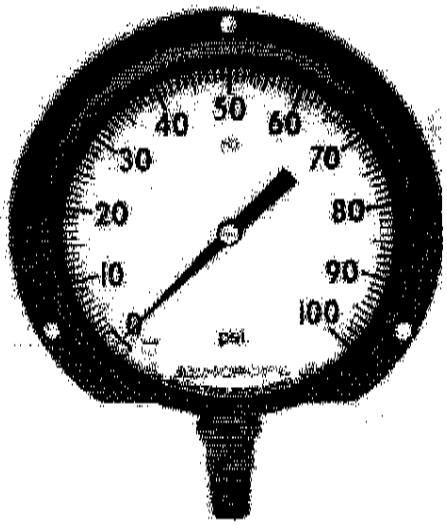

SPECIFICATIONS	TYPE 1009	TYPE 1010
Accuracy (% / Grade)	1% / Grade 1A	1% / Grade 1A
Dial Size	4½", 6"	4½", 6", 8½", 12"
Tube and Socket Material	4½" – 4130 Alloy Steel Tube, 1019 Steel Socket – Bronze Tube, Brass Socket – 316 St. St. Tube and Socket – Monel Tube and Socket – 316 St. St. Tube, Steel Socket	4½" – 4130 Alloy Steel Tube, 1019 Steel Socket – Bronze Tube, Brass Socket – 316 St. St. Tube and Socket – Monel Tube and Socket – 316 St. St. Tube, Steel Socket
	6" – Bronze Tube, Brass Socket – 316 St. St. Tube and Socket – 316 St. St. Tube, Steel Socket	6" – Bronze Tube, Brass Socket – 316 St. St. Tube and Socket – 316 St. St. Tube, Steel Socket
	—	8½" – Bronze Tube, Brass Socket – 316 St. St. Tube and Socket
		12" – Monel Tube and Socket – 316 St. St. Tube and Socket
Bellows and Socket Material	—	—
Case Material	Stainless Steel Polished	(1) Aluminum 4½", 6", 8½", 12" Black Epoxy Coated
Movement	Stainless Steel with Bronze Hairspring	Stainless Steel with Bronze Hairspring
NPT Connection	¼", ½" Lower or Back	¼", ½" Lower or Back
Ranges	Steel – Vac to 5,000 psi Bronze – Vac to 1,000 psi St. St. – Vac to 20,000 psi St. St./Steel – Vac to 20,000 psi Monel – Vac to 30,000 psi	Steel – Vac to 5,000 psi Bronze – Vac to 1,000 psi St. St. – Vac to 20,000 psi St. St./Steel – Vac to 20,000 psi Monel – Vac to 20,000 psi
Ring	Bayonet Lock Stainless Steel Polished	(1) Slip Steel Black Epoxy Coated
Window	Glass	Glass
Pointer	Adjustable	Non-Adjustable
Weatherproof	Yes	No

FNW

Figure 420

2 PC FULL PORT 600 WOG BRASS BALL VALVE

WITH NPT ENDS

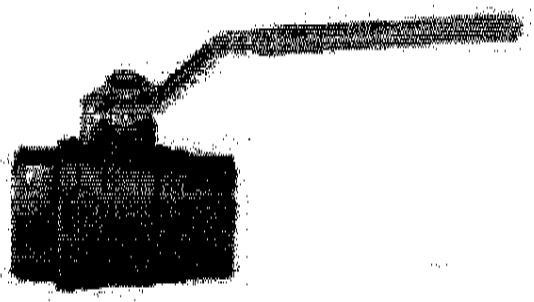

NO.	PARTS NAME	MATERIALS
1	Body	Brass UNS C37700-65
2	End Connection	Brass UNS C37700-65
3	Ball	Brass UNS C37700-65
4	Seat Material	PTFE
5	Stem Seals	PTFE
6	O Ring	NBR 70 SH A
7	Packing Gland	Brass UNS C37700-65
8	Nut	Plated Steel
9	Stem	Brass UNS C37700-65 Chrome
10	Lever Handle	Plated Steel

FEATURES:

- BRASS BALL VALVE - FULL PORT FROM 1/4" TO 4"
- PRESSURE RATING 600 PSI WOG - 150 PSI STEAM
- TEMPERATURES TO 320°F (160°C)
- BLOW OUT PROOF STEM, CHROME PLATED BRASS BALL
- PTFE SEATS, SEALS, AND THRUST WASHER ADJUSTABLE STEM PACKING
- LEVER HANDLE SIZE 1/4" TO 4"

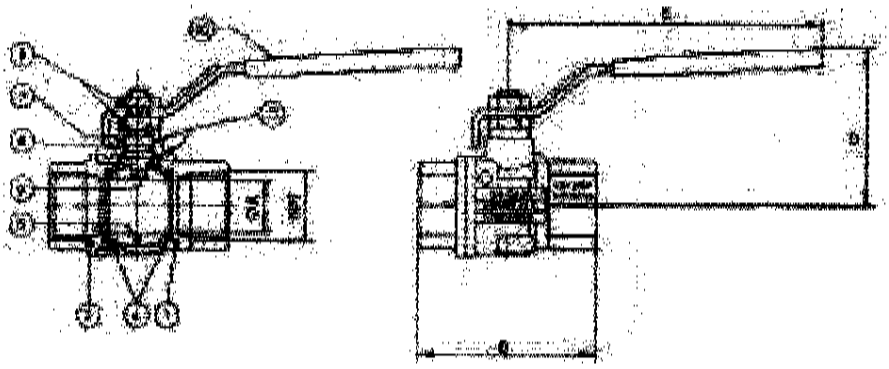

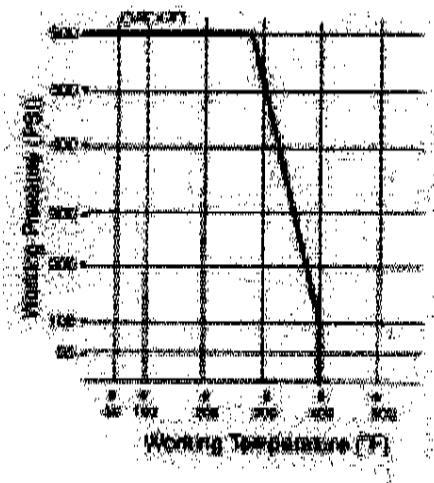

DIMENSIONS:

SIZE	1/4	3/8	1/2	3/4	1	1 1/4	1 1/2	2	2 1/2	3	4
A	0.89	0.99	0.59	0.79	0.98	1.26	1.57	1.96	2.50	3.15	3.94
B	2.02	2.02	2.44	2.71	3.07	3.42	3.89	4.33	5.08	5.45	7.60
D	1.75	1.75	1.98	2.36	2.44	3.07	3.34	3.79	3.62	5.45	5.94
E	3.85	3.85	3.85	4.00	4.00	5.02	5.02	6.97	6.07	8.07	10.23
WT	0.30	0.28	0.41	0.67	1.02	2.01	3.01	4.18	8.00	12.90	22.04

FNW VALVE CO.
4120 N.E. Columbia Blvd.
Portland, Oregon USA 97211
Phone 503-287-6383
FAX 503-281-0677

TA CHEN

Approval
Certificate No.9316925
for Ball Valves

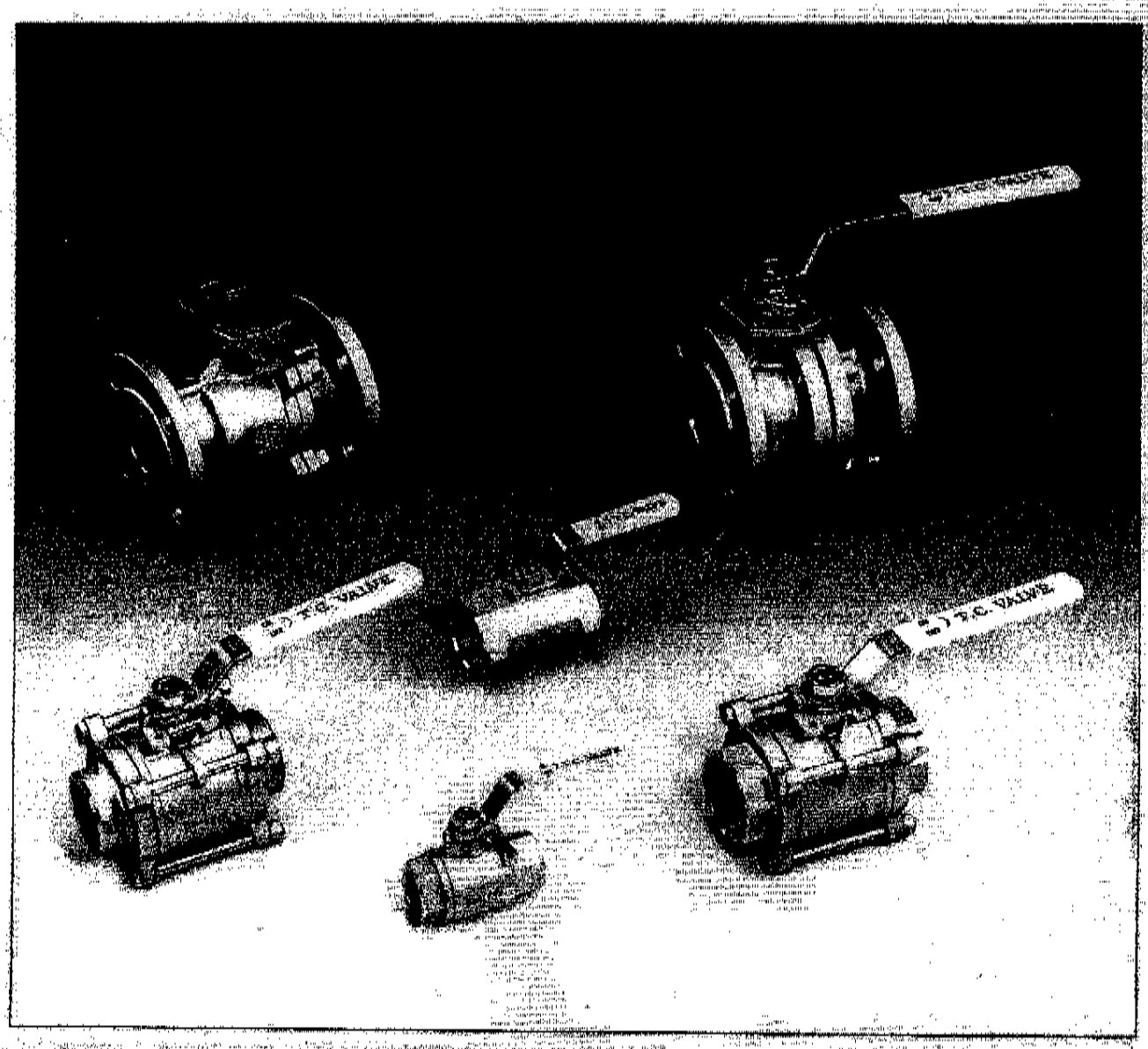

FC-0802 FIRE SAFE TRUNNION BALL VALVE FLANGE

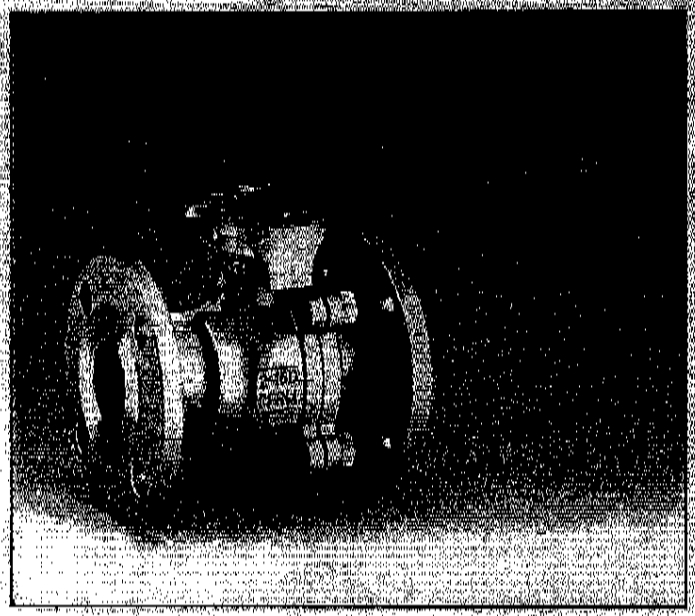

DESIGN FEATURES:

- FACE TO FACE: ANSI B16.10
- FLANGE DIMENSION: ANSI B16.5
- WALL THICKNESS: ANSI B16.34
- TEST STANDARD: API 6D
- FIRE SAFE DESIGN PER API-607, ANTI-STATIC

PRESSURE TEMP RATINGS (BODY)

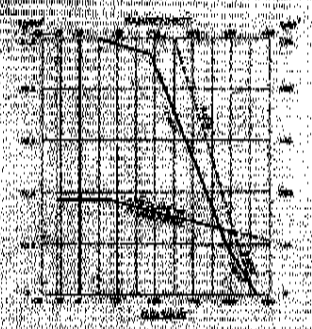

MATERIALS LIST

NO.	PART NAME	MATERIAL: STAINLESS STEEL	MATERIAL: CARBON STEEL	Q'TY
1	BODY	ASTM A351 Gr.CF8M	ASTM A216 WCB	1
2	CAP	ASTM A351 Gr.CF8M	ASTM A216 WCB	1
3	BALL	ASTM A351 Gr.CF8M	ASTM A351 Gr.CF8	1
4	STEM	ASTM A276 Gr.316	ASTM A276 Gr.304	1
5	SEAT	PTFE+15% GF	PTFE+15% GF	2
6	GASKET	PTFE	PTFE	1
7	THRUST WASHER	PTFE	PTFE	1
8	PACKING	PTFE	PTFE	1
9	GLAND	ASTM A351 Gr.CF8	ASTM A351 Gr.CF8	1
10	STOPPER	SS304	SS304	1
11	SNAP RING	SS304	SS304	2
12	GLAND BOLT	ASTM A193 Gr.B8	ASTM A193 Gr.B7	2
13	STUD BOLT	ASTM A193 Gr.B8	ASTM A193 Gr.B7	4-6
14	SET NUT	ASTM A194 Gr.8M	ASTM A194 Gr.2H	4-6
15	HANDLE	ASTM A536 Gr.65-45-12	ASTM A536 Gr.65-45-12	1

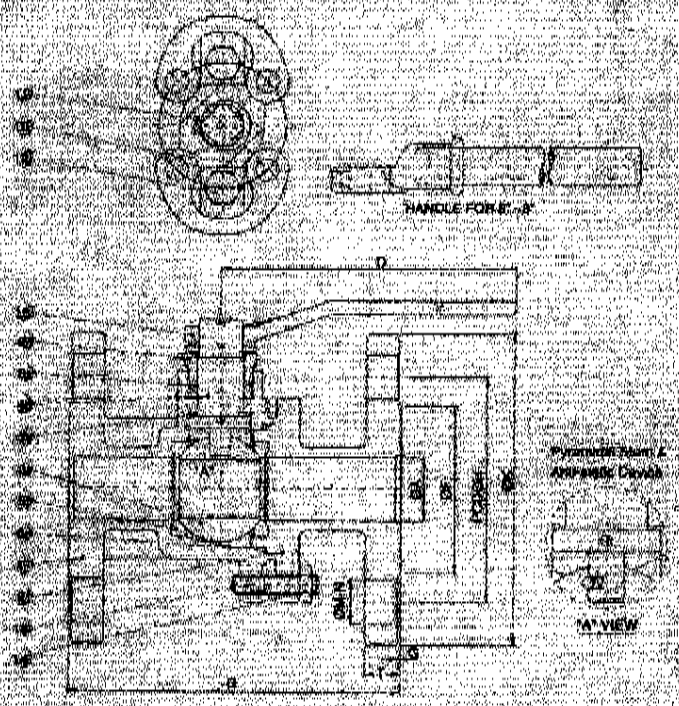

DIMENSIONS

SIZE		A		B		E		G		H		K		T		M		N	D		H1		Cv
inch	mm	inch	mm	inch	mm	inch	mm	inch	mm	inch	mm	inch	mm	inch	mm	inch	mm		inch	mm	inch	mm	Factor
1/2"	15	0.59	15.0	4.25	107.9	1.38	35.0	0.06	1.6	2.38	60.4	3.50	88.9	0.44	11.1	0.62	15.7	4	5.12	130	2.9	73.5	19
3/4"	20	0.79	20.0	4.62	117.3	1.69	42.9	0.06	1.6	2.75	69.8	3.88	98.5	0.44	11.1	0.62	15.7	4	5.12	130	3.0	76.0	37
1"	25	0.98	25.0	5.00	127.0	2.00	50.8	0.06	1.6	3.12	79.2	4.25	107.9	0.44	11.1	0.62	15.7	4	6.46	164	3.7	94.5	54
1 1/4"	32	1.26	32.0	5.50	139.7	2.50	63.5	0.06	1.6	3.50	88.9	4.62	117.3	0.50	12.7	0.62	15.7	4	6.46	164	3.9	100.0	103
1 1/2"	40	1.50	38.0	6.50	165.1	2.88	73.1	0.06	1.6	3.38	98.5	5.00	127.0	0.56	14.2	0.62	15.7	4	8.07	205	4.3	109.0	143
2"	50	1.97	50.0	7.00	177.8	3.62	91.9	0.06	1.6	4.75	120.6	6.00	152.4	0.62	15.7	0.75	19.0	4	8.07	205	5.2	131.5	360
2 1/2"	65	2.56	65.0	7.50	190.5	4.12	104.6	0.06	1.6	5.50	139.7	7.00	177.8	0.69	17.5	0.75	19.0	4	8.07	205	5.3	134.5	440
3"	80	3.15	80.0	8.00	203.2	5.00	127.0	0.06	1.6	6.00	152.4	7.50	190.5	0.75	19.0	0.75	19.0	4	12.83	326	6.1	155.0	520
4"	100	3.94	100.0	9.00	228.6	6.19	157.2	0.06	1.6	7.50	190.5	9.00	228.6	0.94	23.8	0.75	19.0	8	12.83	326	6.9	176.0	820
5"	125	4.92	125.0	14.00	355.6	7.31	185.6	0.06	1.6	8.50	215.9	10.00	254.0	0.94	23.8	0.88	22.3	8			9.4	239.5	1500
6"	150	5.91	150.0	15.50	393.7	8.50	216.9	0.06	1.6	9.50	241.3	11.00	279.4	1.00	25.4	0.88	22.3	8			9.8	250.0	1920
8"	200	7.87	200.0	18.00	457.2	10.62	269.7	0.06	1.6	11.75	298.4	13.50	342.9	1.12	28.4	0.88	22.3	8					3600

APCO COMBINATION AIR VALVES

SINGLE BODY *Double Orifice*

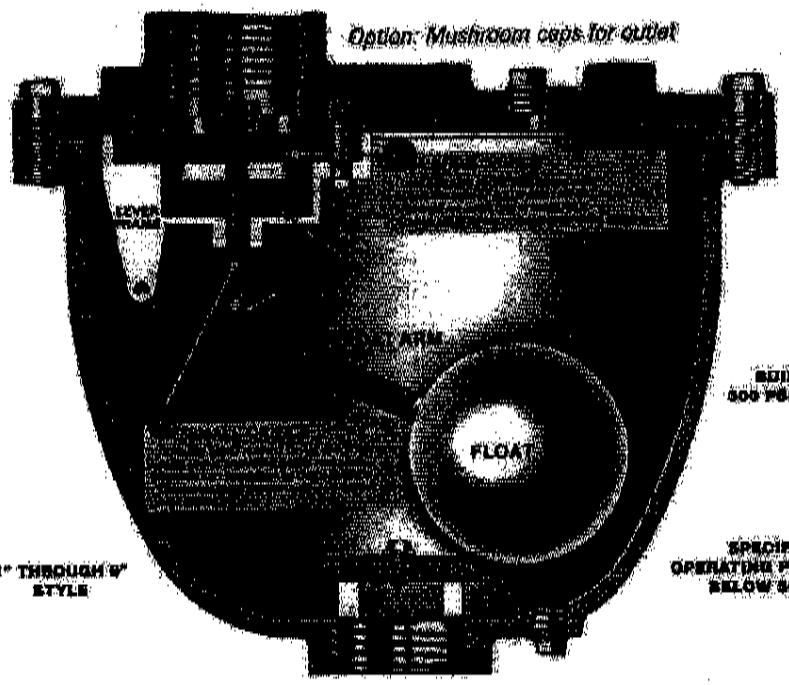

BUILT FOR 300 PSI SERVICE

SPECIFY IF OPERATING PRESSURES BELOW 80 P.S.I.

1" THROUGH 8" STYLE

MATERIALS USED IN BOTH STYLE COMBINATION AIR VALVES

Body, Cover, Lever Frame	Cast Iron
Float	Stainless Steel
Seat	Buna-N
Lever Frame (1" & 2" size)	Delrin
Leverage Mechanism (8" size)	Stainless Steel

ALL OTHER INTERNAL PARTS STAINLESS STEEL OR BONZE

8" STYLE

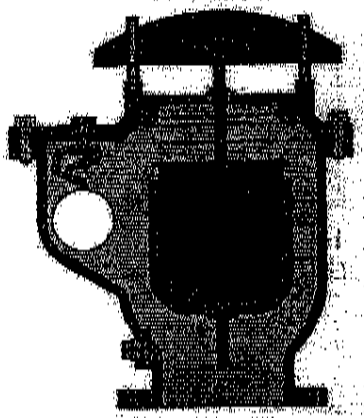

TO SIZE AIR VALVES FOR PIPELINE SERVICE USE APCO AIR VALVE COMPUTER or APSLIDE COMPUTER SOFTWARE

1" 143C (ILLUSTRATED ABOVE)	2" 145C (ILLUSTRATED ABOVE)	3" 147C (ILLUSTRATED ABOVE)	4" 149C (ILLUSTRATED ABOVE)	6" 150C (ILLUSTRATED ABOVE)	8" 151C (SEE ABOVE DRAWING)
PHYSICAL DIMENSIONS Height 10" Width 7" Length 11" Weight 35 lbs.	PHYSICAL DIMENSIONS Height 12 1/4" Width 8" Length 14" Weight 75 lbs.	PHYSICAL DIMENSIONS Height 15 1/2" Width 10" Length 16" Weight 100 lbs.	PHYSICAL DIMENSIONS Height 17 1/8" Width 11" Length 18" Weight 170 lbs.	PHYSICAL DIMENSIONS Height 27 1/4" Width 13" Length 18 3/8" Weight 205 lbs.	PHYSICAL DIMENSIONS Height 25 3/4" Width 17 1/2" Length 22 1/4" Weight 300 lbs.
INLET/OUTLET 1" PIPE THREAD * EXCEPT POPPET	INLET/OUTLET 2" PIPE THREAD	OUTLET 3" PIPE THREAD 125 & 250 LB. FLANGES ALSO AVAILABLE HEIGHT FLANGED 16 1/2"	INLET/OUTLET 4" PIPE THREAD 125 & 250 LB. FLANGES ALSO AVAILABLE HEIGHT FLANGED 19"	INLET 125 & 250 LB. FLANGE OUTLET OPTIONS * PLAIN WITH HOOD * THREADED * FLANGED	INLET 125 & 250 LB. FLANGE OUTLET OPTIONS * PLAIN WITH HOOD (AS SHOWN) * FLANGED

SINGLE BODY SPECIFICATIONS

Combination Air Valve Sizes 1" through 8", Single Body double orifice assure large volumes of air to escape out the large orifice when filling a pipeline and closes when liquid enters the valve. When the valve is closed and pressured, the small air release orifice will open to allow small pockets of air to escape automatically and independently of the large orifice.

The large orifice shall also allow large volumes of air to enter during pipeline drainage to break the vacuum. The body inlet must be baffled to protect the float from direct forces of rushing air and water in pipeline pressure valve shut-off.

The Buna-N seat must be retained to the valve lever without discharge for drip tight shut-off. The floats shall be heavy stainless steel. The plug or float shall be center guided through the baffle for positive shut-off.

Valve exterior to be painted with Red Oxide Primer Paint as accepted by the FDA for use in Potable Water.

All materials of construction shall be certified in writing to conform to ASTM specifications as follows:

Body & Cover	Cast Iron	ASTM A126 GRB
Float	Stainless Steel	ASTM A240
Needle & seat	Buna-N	
Plug	Bronze	ASTM B124
Leverage frame	Delrin/Cast Iron	ASTM D2190/ASTM A126 GR B

Valve to be APCO Model (Engineer to Name) Combination Air Valve as manufactured by Valve & Primer Corporation, Schaumburg, Illinois, U.S.A.

THERE ARE BASICALLY TWO TYPES OF AIR VALVES:

TYPE 1. AIR/VACUUM VALVES with ① LARGE ORIFICE to vent large volumes of air for efficient filling and draining of pipelines. This protects against vacuum and water column separation or pipeline collapse.

TYPE 2. AIR RELEASE VALVES with ② SMALL ORIFICE for continuous venting of air pockets as they accumulate in a pressurized pipeline.

When the above types are combined, the result is a COMBINATION AIR VALVE.

The Combination Air Valve is available in a SINGLE BODY DOUBLE ORIFICE shown here, or in a DUPLEX arrangement (see Back Page). The single body is most popular due to its smaller overall size and resulting space saving inside a valve vault. It is available in 1" to 8" sizes.

HOW IT WORKS: Sizes 1" through 6" incorporate a poppet (or plug) which rests freely inside the lever frame. The center stem of the poppet has a SMALL ORIFICE through it. When water enters the main valve body it raises the float and float arm which puts the needle, attached to the arm, in contact with the poppet stem while lifting the poppet to the shut-off position against the LARGE ORIFICE.

As air accumulates inside the main valve body the water is displaced. The float arm falls away from the poppet stem to expose the small orifice and the pocket of air is vented. Water re-enters the main valve body lifting the float arm back to the shut-off position and the cycle repeats as air accumulates. As long as the main valve body is under pressure, the poppet stays closed because the pressure differential across the large orifice is more than the poppet can overcome.

If, however, a negative pressure occurs inside the main valve body, the poppet will drop open to allow air in and prevent a vacuum from forming in the pipeline.

Size 8" functions in the same manner, but, instead of a poppet, a float is used for shunting off the large orifice and a separate internal float operated lever mechanism is incorporated with a small orifice for venting smaller pockets of air when the system is pressurized.

Every Combination Air Valve is hydrostatically seat and shell tested before it leaves our factory to insure quality performance in the field.

WHERE TO INSTALL

TYPICAL PIPELINE SHOWING ITS HYDRAULIC GRADIENT

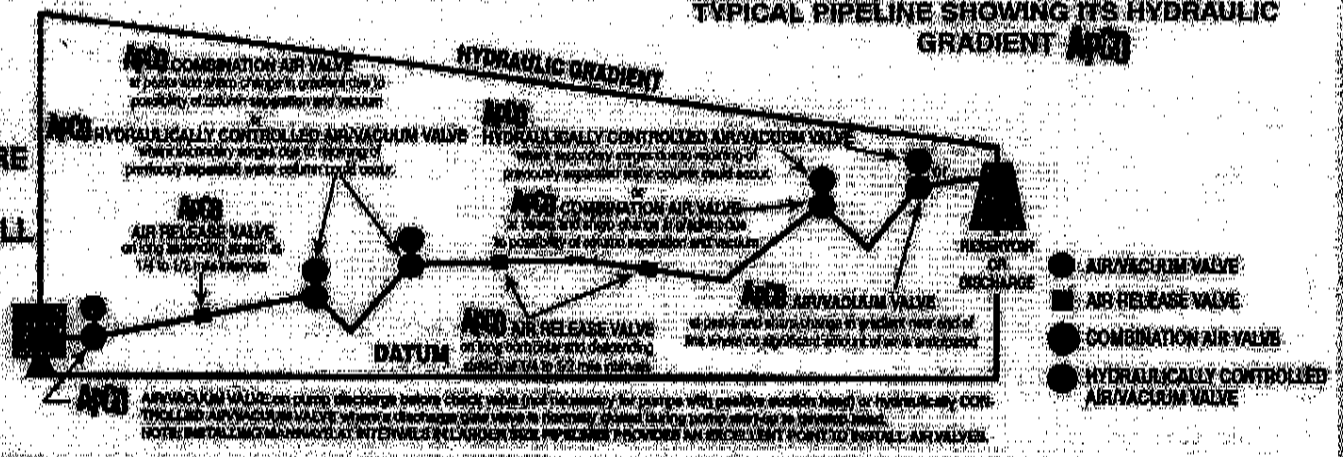

ORIFICE SIZES

for 300 psi working pressure

MODEL	① LARGE ORIFICE	② SMALL ORIFICE
143C	1"	5/64"
145C	2"	3/32"
147C	3"	3/32"
149C	4"	3/32"
150C	6"	1/8"
151C	8"	5/32"

DISCHARGE CAPACITIES FOR COMBINATION AIR VALVE

CURVES SHOWN ARE ACTUAL FLOW CAPACITIES AT 14.7 PSI BAROMETRIC PRESSURE AND 70° F TEMPERATURE BASE ON ACTUAL TEST. THESE FIGURES ARE NOT FOR THE FLOW CAPACITIES ACROSS THE ORIFICE BUT FLOW ACROSS THE ENTIRE VALVE IN THE TEST SET-UP. APPROACH VELOCITY TO THE VALVE IS NEGLIGIBLE. THEREFORE ACTUAL CAPACITY EXCEEDS THE VALUES SHOWN ON CHART. TEST CONDUCTED BY: PHILLIP PETROLEUM COMPANY ENGINEERING DEPARTMENT – TEST DIVISION EDMOND PLANT OCTOBER 7, 1961.

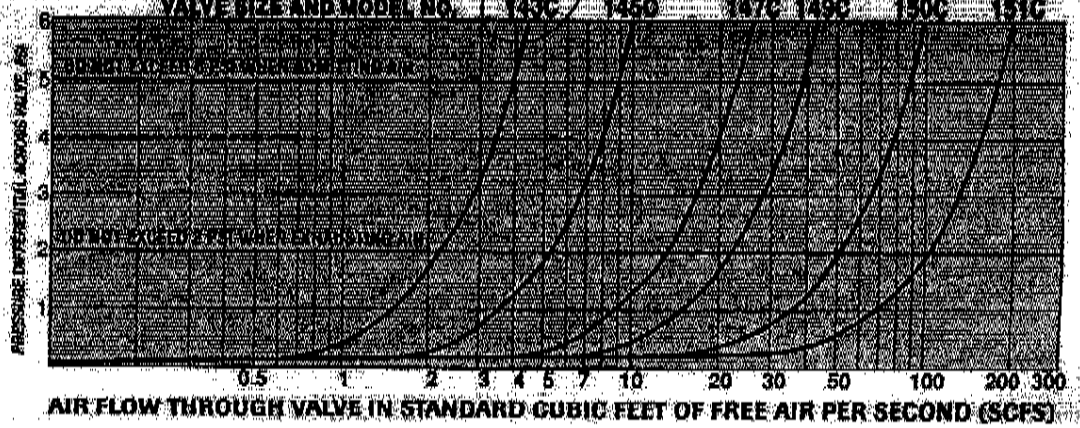

SpiralJet™ SPRAY NOZZLES

COMPACT, ONE PIECE, LARGE FLOW RATE FULL CONE SPRAY NOZZLES

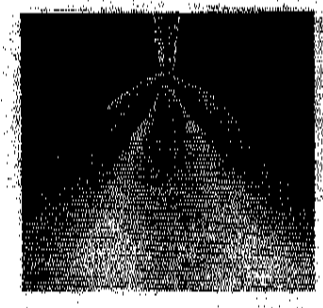

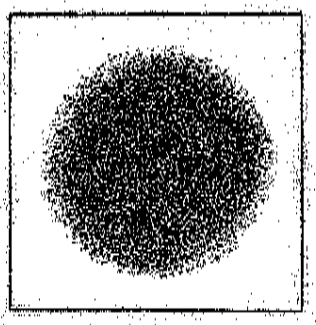

HHSJ

threaded/hex
¼"-2" NPT or BSPT (M)

HHFJ

threaded/flats
¾"-4" NPT or BSPT (M)

HHRJ

threaded/round
¾"-4" NPT or BSPT (M)

DESIGN FEATURES

The Type HHSJ is a *Full Cone* spray nozzle available for spray angles ranging from 60° to 170°. These compact nozzles permit maximum liquid throughput for a given pipe size and the free passage design minimizes clogging. The compact size can be installed or retrofitted on most pipe systems. Available in NPT or BSPT (M) threads.

Flow capacity at 40 psi (3 bar) ranges from 1.4 to 1,050 gpm (5.5 to 4140 l/min).

Sizes ¼" to 2" are available in brass, cast 316 stainless steel, and TEFLON or PVC materials. Brass versions available with hex design. Stainless steel with flats, TEFLON and PVC nozzles with rounded design. In the larger 3" and 4" sizes, both brass and stainless steel are available.

In flats design only. They can also be produced from a wide variety of other materials for specific applications.

COMMON APPLICATIONS

- Flue-gas scrubbing
- Gas cooling
- Washing & rinsing processes
- Fire suppression & prevention

ACCESSORIES

Adjustable Bell Fittings

Split Eyelet Connector

Other Accessories:

- Pressure Regulators
- Control Valves
- Solenoid Valves
- Swivel Connectors

SEE SECTION G FOR COMPLETE INFORMATION.

PERFORMANCE DATA

Pipe Size NPT or BSPT (M)	Spray Angle at 10 psi 60°	90°	120°	150°	170°	Capacity Size	Orifice Diam.	Free Passage Diam.	Capacity (gallons per minute) 10 psi	20 psi	40 psi	100 psi	200 psi	Nozzle Length per Spray Angle 60°, 90° & 120°	150° & 170°
1/4	●	●	●	●	●	07	1/8"	3/16"	1.1	1.6	2.3	3.6	5.1	1 3/16"	2 3/16"
	●	●	●	●	●	10	3/16"	1/4"	1.4	2.0	2.8	4.0	5.6	1 3/16"	2 3/16"
	●	●	●	●	●	20	3/16"	1/4"	2.0	2.8	4.0	6.5	12.5	1 3/16"	2 3/16"
3/8	●					07	1/8"	3/16"	.7	.99	1.4	2.2	3.1	1 3/16"	—
	●	●	●	●	●	10	3/16"	1/4"	1.1	1.6	2.3	3.6	5.1	1 3/16"	2 3/16"
	●	●	●	●	●	20	3/16"	1/4"	1.4	2.0	2.8	4.0	5.6	1 3/16"	2 3/16"
	●	●	●	●	●	30	3/16"	1/4"	3.0	4.2	6.0	9.5	13.0	3 3/16"	2 3/16"
	●	●	●	●	●	40	1/4"	1/4"	4.0	5.7	8.0	12.6	23	1 3/16"	2 3/16"
	●	●	●	●	●	60	1/4"	1/4"	4.8	6.8	9.6	15.2	21.5	1 3/16"	2 3/16"
	●	●	●	●	●	80	1/4"	1/4"	5.7	8.1	11.5	18.2	25.8	1 3/16"	2 3/16"
1/2	●	●	●	●	●	120	3/8"	3/16"	10.0	11.0	23	38	76	2 3/16"	3 1/16"
	●	●	●	●	●	160	7/16"	3/16"	16.4	23	33	52	104	2 3/16"	3 1/16"
3/4	●	●	●	●	●	240	5/8"	1/4"	21.3	30	42	67	135	2 3/16"	3 1/16"
1	●	●	●	●	●	340	3/4"	3/8"	34	48	68	110	215	3 3/16"	4 3/16"
	●	●	●	●	●	470	3/4"	3/8"	47	66	94	149	297	3 3/16"	4 3/16"
1-1/2	●	●	●	●	●	640	7/8"	3/4"	64	91	128	202	405	4 3/16"	5 3/16"
	●	●	●	●	●	820	1"	3/4"	82	116	164	259	518	4 3/16"	5 3/16"
	●	●	●	●	●	1050	1 1/8"	3/4"	95	134	189	304	607	4 3/16"	5 3/16"
2	●	●	●	●	●	1400	1 3/8"	7/8"	140	198	280	443	885	5 7/16"	6 7/16"
	●	●	●	●	●	~1780 **	1 1/2"	7/8"	178	252	356	563	1125	5 7/16"	6 7/16"
3	●	●	●			2600	1 7/8"	1 3/8"	230	324	512	810	1620	6"	—
	●	●	●			3500	2"	1 3/8"	300	420	662	1050	2100	6"	—
4	●	●	●			5250	2 1/2"	1 3/8"	525	743	1050	1660	3320	6"	—

** At higher pressures, Brass and Cast 316 Stainless Steel nozzles are required.

Material	Material Code
●	no material code = Brass
●	SS = Cast 316 Stainless Steel
●	TEF = TEFLON
●	PVC = Polyvinyl Chloride

ORDERING INFORMATION

COMPLETE NOZZLE NUMBER

1/4 HHSJ - SS 120 07

Pipe Size | Nozzle Type | Material Code | Spray Angle | Capacity Size

ZOOK

Park Circle Drive
Chagrin Falls Ohio
44022-0419 USA

Phone 216-543-1010
Fax 216-543-4930

Bulletin 6000-2

REF 1884-1580 PRINTED USA

Mono style

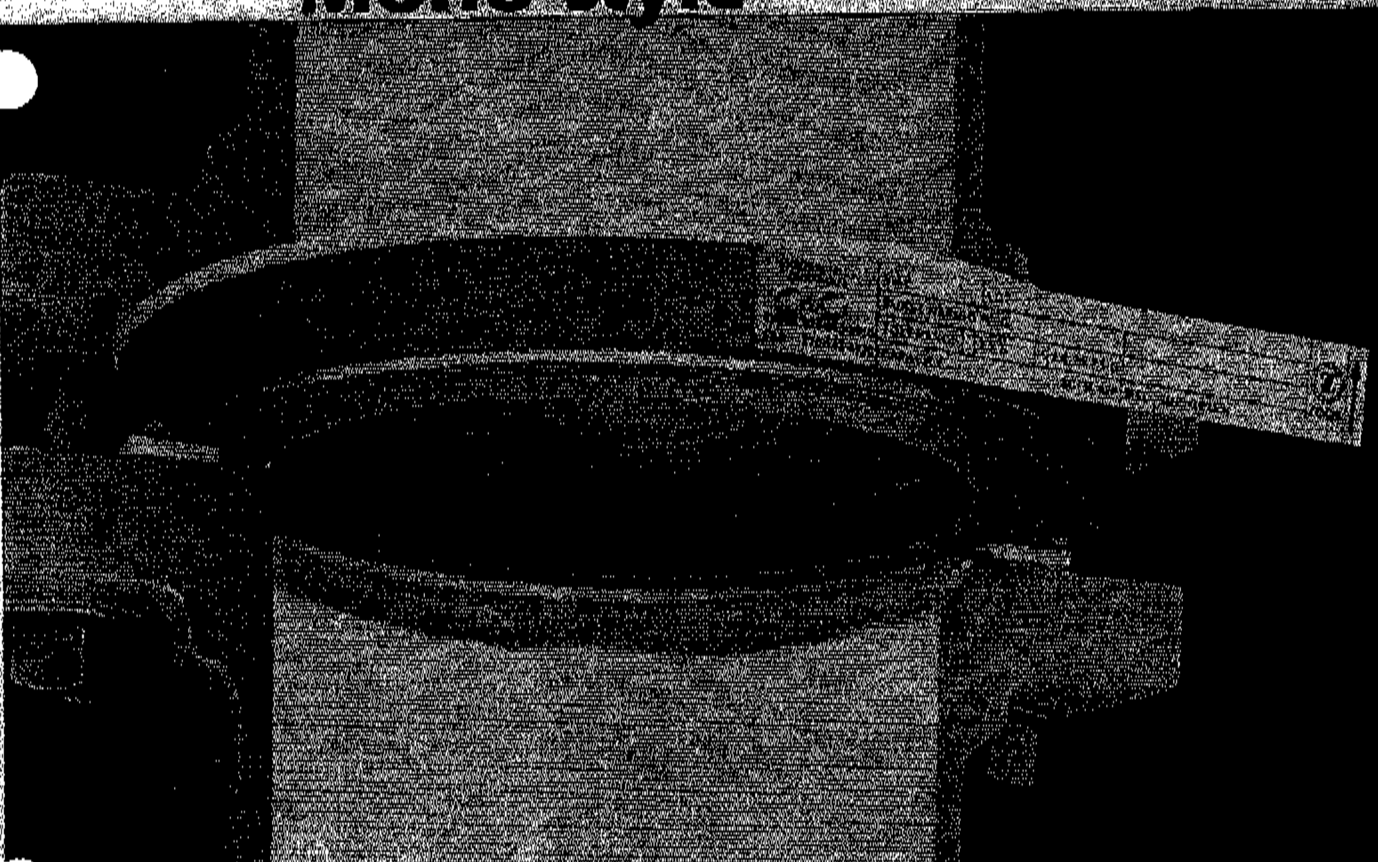

[illegible]	[illegible]	[illegible]	[illegible]	[illegible]	[illegible]	[illegible]
1/2	[illegible]	[illegible]	[illegible]	[illegible]	[illegible]	[illegible]
3/4	[illegible]	[illegible]	[illegible]	[illegible]	[illegible]	[illegible]
1	[illegible]	[illegible]	[illegible]	[illegible]	[illegible]	[illegible]
1-1/2	[illegible]	[illegible]	[illegible]	[illegible]	[illegible]	[illegible]
2	[illegible]	[illegible]	[illegible]	[illegible]	[illegible]	[illegible]
3	[illegible]	[illegible]	[illegible]	[illegible]	[illegible]	[illegible]
4	[illegible]	[illegible]	[illegible]	[illegible]	[illegible]	[illegible]
6	[illegible]	[illegible]	[illegible]	[illegible]	[illegible]	[illegible]
8	[illegible]	[illegible]	[illegible]	[illegible]	[illegible]	[illegible]
10	[illegible]	[illegible]	[illegible]	[illegible]	[illegible]	[illegible]
12	[illegible]	[illegible]	[illegible]	[illegible]	[illegible]	[illegible]
14	[illegible]	[illegible]	[illegible]	[illegible]	[illegible]	[illegible]
16	[illegible]	[illegible]	[illegible]	[illegible]	[illegible]	[illegible]
18	[illegible]	[illegible]	[illegible]	[illegible]	[illegible]	[illegible]
20	[illegible]	[illegible]	[illegible]	[illegible]	[illegible]	[illegible]
24	[illegible]	[illegible]	[illegible]	[illegible]	[illegible]	[illegible]

[illegible]

[illegible]

[illegible]

[illegible] page 18.

WARNING

[illegible]

Venting capacities

Mono disk venting capacities are shown below in standard cubic feet per minute of air at 1000 °F standard conditions of 14.7 psia. Actual air weight at other temperatures and conditions may be calculated using Ni of .88 based on specific heat of Air, Gas Sys. - Vol. UE-79. Accessory manufacturers are shown at bottom for vacuum supports and insulated disks. Type of vacuum support used by diameter and rating is shown in bold areas in the chart. Example: A 4" MONO disk rated 20 psig and expected to see vacuum service will use a bar type vacuum support. Vent reduces original capacity of 7.84 by vacuum factor of .77. Resulting in adjusted capacity of 6.77 x 1000 scfm at 1 atm. Same disk as would be installed for use above 3 atm, there are adjusted capacity of 6.77 must be reduced further by the factor of .43 noted in the 4" diameter column for 0" Rating (0 psig). Insulated disk and plate type vacuum supports cannot be used with an INSULATED disk. These disks are noted as (Insulated) in bold type for further ratings or capacities see INVENTO Style prices 10 and 11.

Disk Diameter - Inches

Burst Rating Psig	1/2	3/4	1	1 1/4	2	3	4	6	8	10	12	14	16	18	20	24
0										19.1	33.5	51.5	74.4	54.5	70.8	103.0
1/2									12.8	19.4	30.0	46.1	66.6	52.9	71.1	103.0
1									13.6	20.1	31.0	35.4	50.0	80.1	24.2	107.0
Vacuum																
2																
3																
4																
5																
6																
7																
8																
9																
10																
15																
20																
25																
30																
40																
50																
75																
100																
125																
150																

Guide to capacity adjustments for Mono style disks only

Vacuum Supports																
RING																
PLATE																
BAR																
Insulated Disks	1.0	.80	.79	.61	.55	.48	.31	.36	.74	.75	CONTACT FACTORY					

ZOOK phone 216-543-1010 fax 216-543-4930

ZOOK DISKS | ZOOK DISKS | ZOOK DISKS | INSTALLATION INFO | INFORMATION

FNW
VALVE CO.

RESILIENT SEAT BUTTERFLY VALVES

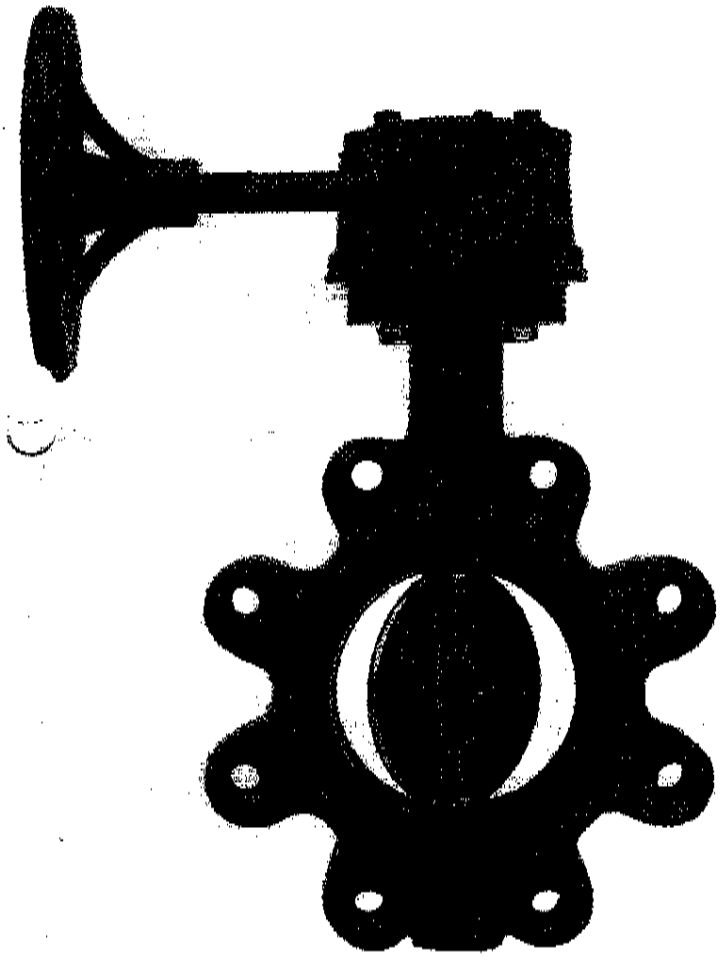

- **Cartridge Type Seat**
  Offers easy change of seat at site without special tools
- One piece body is ribbed to assure high strength and minimum weight
- **Retainer Plate**
  Secured retainer plate on top stem, allows removal of operator while valve is in service under pressure, providing blow-out proof stem and positive pressure against stem and gland seal
- **Dead-end Service**
  Lug body valves are recommended for lines where dead-end service is required. Lug style butterfly valves in dead-end service are rated at 200 psi
- Low Maintenance
- Manufactured in ISO 9001 facility

YOUR COMPLETE VALVE SOURCE

FNW
VALVE CO.
4120 N.E. Columbia Blvd.
Portland, Oregon USA 97211
Phone: 503-287-8383
Fax: 503-281-9677
www.fnwvalve.com

FNW VALVE CO.

Figure 731 Wafer
Figure 732 Lug

BUTTERFLY VALVE

The FNW Cartridge Resilient Seated Butterfly Valves conform to API 598. Body pressure tested at 150% and seat at 110% of maximum working pressure.

The FNW Cartridge Resilient Seated Butterfly Valve is manufactured in accordance with the specifications from MSS SP-67. Both Lug and Wafer series valves are designed for ANSI 125/150 lb. class flanges and are rated at 200 P.S.I. WOG service.

FNW Cartridge Resilient Seated Butterfly Valves are 100% factory tested in **both** directions of operation to assure a **zero leakage rate** for many years of bubble tight service.

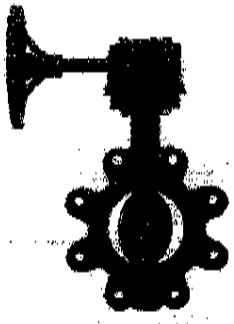

FNW Butterfly Options:

- Body materials: cast iron wafer
  ductile iron lug
- Disc materials: 316SS standard
- Seat materials: BUNA-N and EPDM are standard, Viton upon request
- 10 position lever
- Gear operators
- Electric operators
- Pneumatic actuators
- Stem extension
- Chain wheel operators, square operating nuts

CARTRIDGE TYPE BUTTERFLY VALVE PARTS

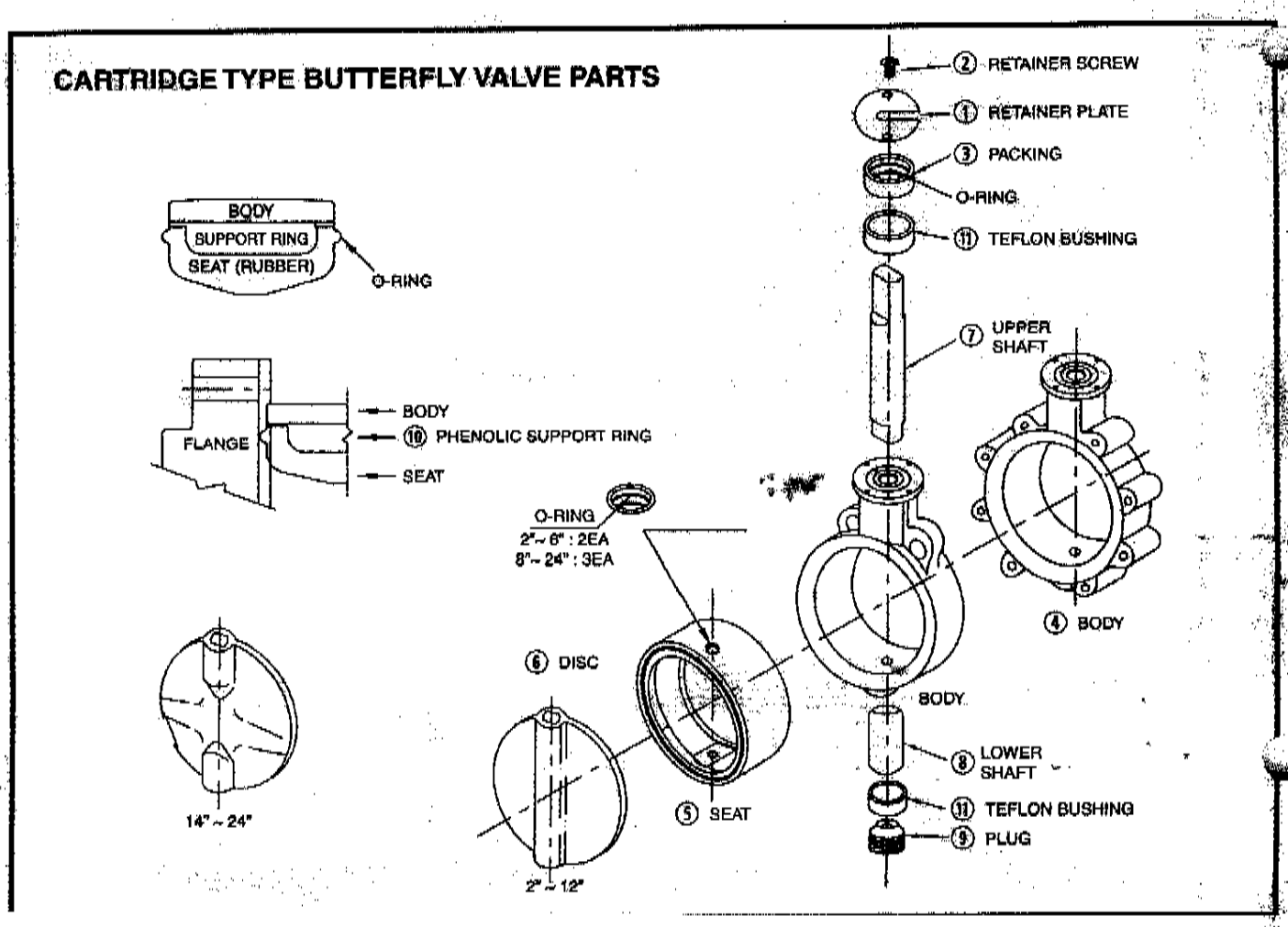

MODEL: 731
WAFER-CARTRIDGE TYPE
ANSI 150LBS

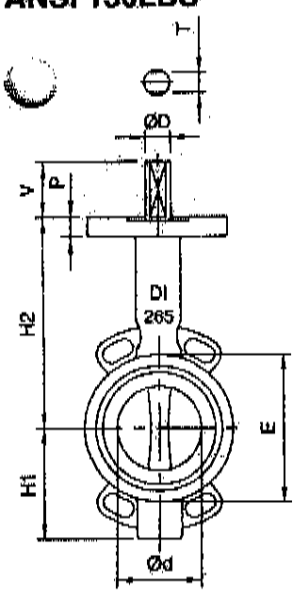

SIZE 2"~12"

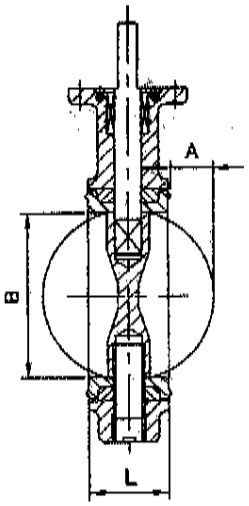

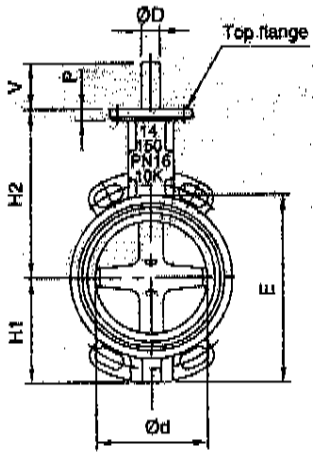

SIZE 14"~16"

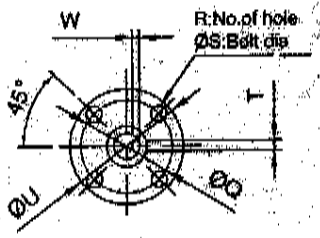

SIZE 14"~24"

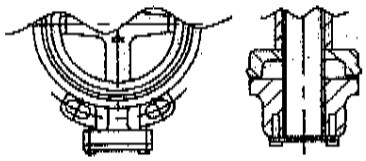

SIZE 18"~24"

MODEL: 732
LUG-CARTRIDGE TYPE
ANSI 150LBS

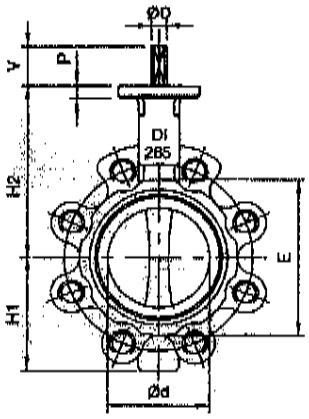

SIZE 2"~12"

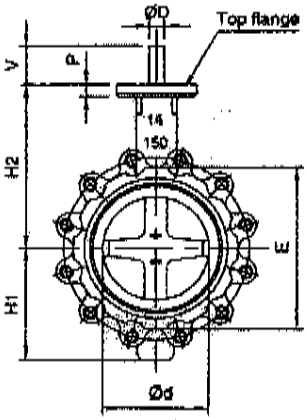

SIZE 14"~16"

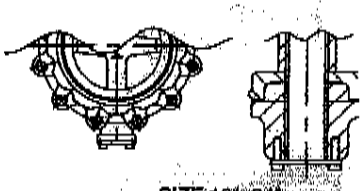

SIZE 18"~24"

SIZE	STEM				TOP FLANGE					OUTLINE DIMENSION						
	ØD	T	V	W	P	ØQ	R	ØS	ØU	L	Ød	H1	H2	E	A	B
2"	0.55	0.39	1.30	–	0.55	2.76	0.16	0.35	3.54	1.69	2.05	2.62	5.28	3.90	0.18	1.93
2.5"	0.55	0.39	1.30	–	0.55	2.76	0.16	0.35	3.54	1.81	2.56	2.80	5.63	4.33	0.41	2.52
3"	0.55	0.39	1.30	–	0.55	2.76	0.16	0.35	3.54	1.81	3.15	3.27	5.71	5.12	0.69	3.11
4"	0.63	0.47	1.30	–	0.63	2.76	0.16	0.35	3.54	2.05	3.94	3.74	6.56	5.98	0.96	3.90
5"	0.75	0.59	1.30	–	0.63	2.76	0.16	0.35	3.54	2.20	4.92	4.33	7.66	7.09	1.40	4.88
6"	0.75	0.59	1.30	–	0.63	2.76	0.16	0.35	3.54	2.20	5.91	4.88	8.13	7.99	1.87	5.87
8"	0.75	0.59	1.30	–	0.67	2.76	0.16	0.35	3.54	2.36	7.80	6.42	9.41	10.00	2.87	7.83
10"	0.87	0.71	1.38	–	0.79	4.02	0.16	0.47	4.92	2.68	9.76	8.94	11.38	12.87	3.62	9.80
12"	1.10	0.87	1.38	–	0.79	4.02	0.16	0.47	4.92	3.07	11.73	9.92	12.56	14.49	4.41	11.77
14"	1.10	0.39	2.76	0.20	0.79	4.02	0.16	0.47	4.92	3.07	13.03	10.41	13.60	16.34	4.96	12.83
16"	1.26	0.39	2.95	0.20	0.91	5.51	0.16	0.71	6.89	4.02	14.96	12.03	13.76	18.31	5.49	14.57
18"	1.50	0.47	2.95	0.20	0.91	5.51	0.16	0.71	6.89	4.49	16.93	13.78	15.75	20.98	6.36	16.54
20"	1.77	0.47	2.95	0.20	0.91	6.50	0.16	0.87	8.27	5.00	18.98	14.96	17.32	22.83	7.15	18.50
24"	2.17	0.55	2.95	0.20	0.91	6.50	0.16	0.87	8.27	6.06	22.83	17.32	20.08	26.77	8.35	21.89

FNW VALVE CO.

Established in 1979, FNW Valve Co. is dedicated to providing high quality valves filling industry needs for all applications.

In the late 1970's there was a demand from the pulp and paper industry in the Northwest for a better knife gate valve. Because of this need, FNW Valve Co. developed the first all-cast stainless steel knife gate valve.

With a basic philosophy to build a product suited to the needs of the end user, FNW Valve Co. was founded. Our innovative approach to the market provides us with the ability to offer a wide-range of valving products. And, as always, we are devoted to quality, service and price.

FNW VALVE

YOUR COMPLETE ACTUATION SOURCE

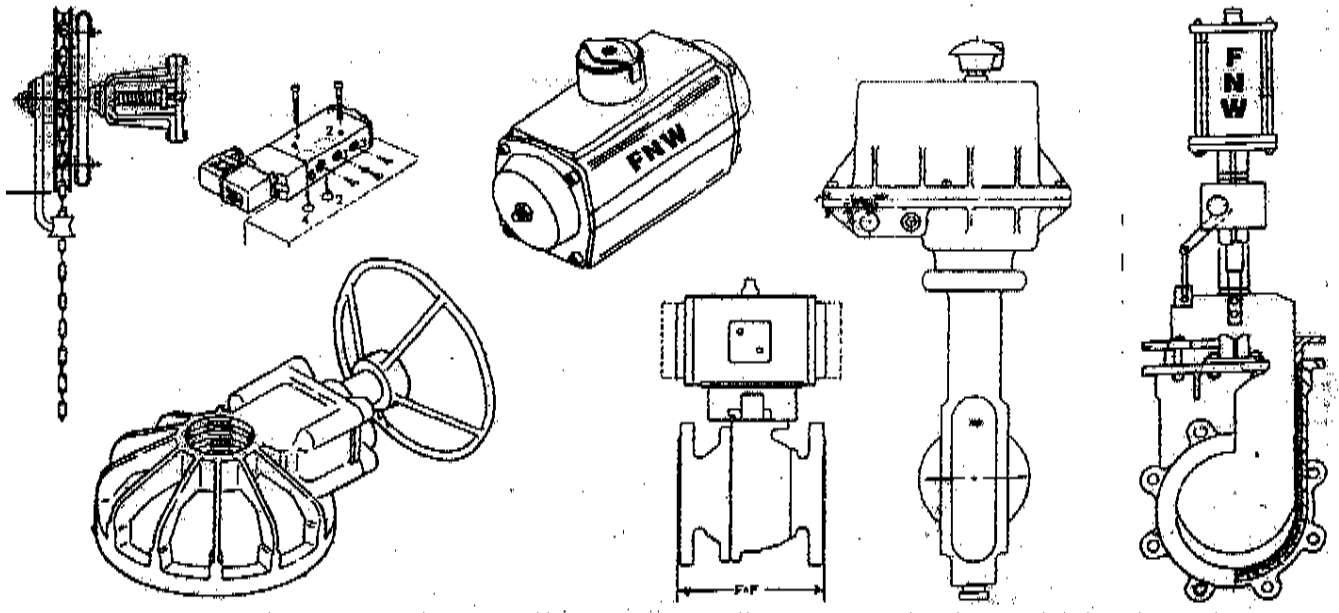

product data carboline® Carboguard® 888

Selection & Specification Data

Generic Type Epoxy Polyamide

Description Low-temperature and rapid curing primer/finish with an extended recoat window. Provides excellent corrosion resistance as a primer, intermediate or finish on steel substrates. Self-priming on steel, galvanized steel and concrete, 888 offers user-friendly characteristics which facilitate application in a wide range of environmental conditions.

Features
- Low temperature cure characteristics
- Rapid handling for in-shop applications
- One-year recoat window
- Low yellowing compared to other epoxies
- VOC compliant to current AIM regulations
- Meets the requirements of:
  - **Class "A" slip coefficient and creep testing criteria for use on laying surfaces**

Color Red (0500);Gray (0700);White (0800);Yellow(0600)

Finish Satin

Primers Self-priming. May be applied over organic and inorganic zinc primers, epoxies and others as recommended. A mist coat may be required to minimize bubbling over inorganic zinc primers.

Topcoats Acrylics, Epoxies, Polyurethanes

Dry Film Thickness 3.0-5.0 mils (75-125 microns) per coat. Do not exceed 10 mils in a single coat.

Solids Content By Volume: 60% ± 2%

Theoretical Coverage Rate 962 mil ft^2 (24.0 m^2/l at 25 microns) Allow for loss in mixing and application

VOC Values As supplied: 2.7 lbs/gal (330 g/l)
Thinned:
19 oz/gal w/ #15: 3.3 lbs/gal (403 g/l)
These are nominal values and may vary slightly with color.

Dry Temp. Resistance Continuous: 200°F (93°C)
Non-Continuous: 250°F (121°C)
Discoloration and loss of gloss is observed above 200°F (93°C).

Limitations
- Epoxies lose gloss, discolor and eventually chalk in sunlight exposure.

Substrates & Surface Preparation

General Surfaces must be clean and dry. Employ adequate methods to remove dirt, dust, oil and all other contaminants that could interfere with adhesion of the coating.

Steel
Immersion: SSPC-SP10
Non-Immersion: SSPC-SP6
Surface Profile: 1.5-3.0 mils (38-75 micron)

Galvanized Steel SSPC-SP1

Concrete
Immersion:
Concrete must be cured 28 days at 75°F (24°C) and 50% relative humidity or equivalent. Prepare surfaces in accordance with ASTM D4258 Surface Cleaning of Concrete and ASTM D4259 Abrading Concrete. Voids in concrete may require surfacing.
Non-Immersion:
Concrete must be cured 28 days at 75°F (24°C) and 50% relative humidity or equivalent. Laitance, form oils, coring agents and hardeners should be removed by suitable method before coating application.

Performance Data

Test Method	System	Results	Report #
ASTM D4541 Adhesion	Galv. Steel 1 ct. 888	3340 psi (Pneumatic)	03399
ASTM D4541 Adhesion	Blasted Steel 2 cts. 888	1167 psi (Elcometer)	L40-172
ASTM D4060 Abrasion	Blasted Steel 1 ct. 888	136 mg. loss after 1000 cycles, CS17 wheel, 1000 gm. load	03216
ASTM D4213 Scrub Resistance	Blasted Steel 1 ct. 888	Erosion rate: 0039 microliters after 100 cycles w/ Abrasive scrub medium	03403
ASTM B117 Salt Fog	Blasted Steel With organic zinc primer 2 cts. 888	No effect on plane, rust in scribe, less than 1/32" (0.7mm) undercutting at scribe after 7000 hours	03289
ASTM D2247 Humidity Test	Blasted Steel 2 cts. 888	No blistering, no rusting, color change less than 2 DE (CieLab units) after 8000 hours	03290
ASTM A-490 Slip Coefficient	Blasted Steel 1 ct. 888	Meets requirements for Class "A" rating	03315
ASTM D5894 QUV/Prohesion	Blasted Steel 1 ct. 888	No rusting, blistering or chalking on plane, rust in scribe, less than 1/8" undercutting at scribe after 1000 hours	03435
Midwest Weathering	Blasted Steel 2 cts. 888	No effect on plane area, except #6 slight chalking after 1 year outdoor exposure at 45° angle.	L40-172
Modified NACE Std. TM-01-74 Immersion	Blasted Steel 2 cts. 888 11-12 mils dft	Passes 6 month immersion in 75°F and 110°F tap water	08559
ASTM D1653 Water Vapor Transmission	2 cts. 888	WVP of 0.6 US perms. Method B – Wet cup: Condition C – R/H. 0%, Temperature 73.1°F	03468

Test reports and additional data available upon written request.

February 2000 replaces November 1999

0398

To the best of our knowledge the technical data contained herein is true and accurate on the date of publication and is subject to change without prior notice. User must contact Carboline Company to verify correctness before specifying or ordering. No guarantee of accuracy is given or implied. We guarantee our products to conform to Carboline quality control. We assume no responsibility for coverage, performance or injuries resulting from use. Liability, if any, is limited to replacement of product. NO OTHER WARRANTY OR GUARANTEE OF ANY KIND IS MADE BY CARBOLINE, EXPRESS OR IMPLIED, STATUTORY, BY OPERATION OF LAW, OR OTHERWISE, INCLUDING MERCHANTABILITY AND FITNESS FOR A PARTICULAR PURPOSE. Carboline® and Carboguard® are registered trademarks of Carboline Company.

Carboguard® 888

Application Equipment

Spray Application (General) The following spray equipment has been found suitable and is available from manufacturers such as Binks, DeVilbiss and Graco.

Conventional Spray Pressure pot equipped with dual regulators, 3/8" I.D. minimum material hose, .070" I.D. fluid tip and appropriate air cap.

Airless Spray

Pump Ratio:	30:1 (min.)
GPM Output:	3.0 (min.)
Material Hose:	3/8" I.D. (min.)
Tip Size:	.017-.021"
Output PSI:	2100-2300
Filter Size:	60 mesh

Teflon packings are recommended and available from the pump manufacturer.

Brush & Roller (General) Not recommended for tank lining applications except when striping welds. Multiple coats may be required to obtain desired appearance, recommended dry film thickness and adequate hiding. Avoid excessive re-brushing or re-rolling. For best results, tie-in within 10 minutes at 75°F (24°C).

Brush Use a medium bristle brush.

Roller Use a short-nap synthetic roller cover with phenolic core.

Mixing & Thinning

Mixing Power mix separately, then combine and power mix. DO NOT MIX PARTIAL KITS.

Ratio 1:1 Ratio (A to B)

Thinning May be thinned up to 19 oz/gal (15%) with #15. Use of thinners other than those supplied or recommended by Carboline may adversely affect product performance and void product warranty, whether expressed or implied.

Pot Life 4 Hours at 75°F (24°C)
Pot life ends when coating loses body and begins to sag. Pot life times will be less at higher temperatures.

Cleanup & Safety

Cleanup Use #2 Thinner or Acetone. In case of spillage, absorb and dispose of in accordance with local applicable regulations.

Safety Read and follow all caution statements on this product data sheet and on the MSDS for this product. Employ normal workmanlike safety precautions. Hypersensitive persons should wear protective clothing, gloves and use protective cream on face, hands and all exposed areas.

Ventilation When used in enclosed areas and thinned, thorough air circulation must be used during and after application until the coating is cured. The ventilation system should be capable of preventing the solvent vapor concentration from reaching the lower explosion limit for the solvents used. User should test and monitor exposure levels to insure all personnel are below guidelines. If not sure or if not able to monitor levels, use MSHA/NIOSH approved supplied air respirator.

Caution This product contains flammable solvents. Keep away from sparks and open flames. All electrical equipment and installations should be made and grounded in accordance with the National Electric Code. In areas where explosion hazards exist, workmen should be required to use non-ferrous tools and wear conductive and non-sparking shoes.

Application Conditions

Condition	Material	Surface	Ambient	Humidity
Normal	60°-85°F (16°-29°C)	65°-85°F (18°-29°C)	60°-90°F (16°-32°C)	0-85%
Minimum	50°F (10°C)	36°F (2°C)	36°F (2°C)	0%
Maximum	90°F (32°C)	135°F (57°C)	120°F (49°C)	90%

Industry standards are for the substrate temperatures to be 5°F (3°C) above the dew point. This product simply requires the substrate temperature to be above the dew point. Condensation due to substrate temperatures below the dew point can cause flash rusting on prepared steel and interfere with proper adhesion to the substrate. Special application techniques may be required above or below normal application conditions.

Curing Schedule

Surface Temp. & 50% Relative Humidity	Dry to Handle	Dry to Recoat / Topcoat	Final Cure	Final Cure for Immersion Service
35°F (2°C)	16 Hours	16 Hours	3 Days	NR*
50°F (10°C)	8 Hours	8 Hours	2 Days	NR*
75°F (24°C)	3 Hours	4 Hours	24 Hours	5 Days
90°F (32°C)	1.5 Hour	2 Hours	12 Hours	4 Days

These times are based on a 3.0-5.0 mil (75-125 micron) dry film thickness. Higher film thickness, insufficient ventilation or cooler temperatures will require longer cure times and could result in solvent entrapment and premature failure. Excessive humidity or condensation on the surface during curing can interfere with the cure, can cause discoloration and may result in a surface haze. Any haze or blush must be removed by water washing before recoating. Maximum recoat time is one year without special surface preparation. If the maximum recoat time has been exceeded, the surface must be abraded by sweep blasting or sanding prior to the application of additional coats. Carboguard 888 applied below 40°F (4°C) may temporarily soften for several hours after temperatures rise to 60°F (16°C). This is a normal condition and will not effect performance.

Packaging, Handling & Storage

Shipping Weight (Approximate)	2 Gallon Kit 29 lbs (13 kg)	10 Gallon Kit 137 lbs (62 kg)

Flash Point (Setaflash) Part A: 54°F (12°C)
Part B: 55°F (13°C)

Storage (General) Store indoors.

Storage Temperature & Humidity 40° -110°F (4°-43°C)
0-100% Relative Humidity

Shelf Life Part A: 36 months at 75°F (24°C)
Part B: 24 months at 75°F (24°C)

carboline®
350 Hanley Industrial Court St. Louis, MO 63144-1599
314-644-1000 314-644-4617 (fax) www.carboline.com

February 2000 replaces November 1999

To the best of our knowledge the technical data contained herein is true and accurate on the date of publication and is subject to change without prior notice. User must contact Carboline Company to verify correctness before specifying or ordering. No guarantee of accuracy is given or implied. We guarantee our products to conform to Carboline quality control. We assume no responsibility for coverage, performance or injuries resulting from use. Liability, if any, is limited to replacement of products. NO OTHER WARRANTY OR GUARANTEE OF ANY KIND IS MADE BY CARBOLINE, EXPRESS OR IMPLIED, STATUTORY, BY OPERATION OF LAW, OR OTHERWISE, INCLUDING MERCHANTABILITY AND FITNESS FOR A PARTICULAR PURPOSE. Carboline® and Carboguard® are registered trademarks of Carboline Company.

product data

carboline

Carboguard® 891

formerly

Super Hi-Gard® 891

Selection & Specification Data

Generic Type Cycloaliphatic Amine Epoxy

Description High solids, high-build potable water coating widely used for lining interior steel and concrete tanks, valves and pipe. Formulated for application at conventional builds (4.0-6.0 mils per coat) as well as high builds (10.0 mils per coat).

Features
- Excellent film build and edge protection
- VOC compliant to current AIM regulations
- Meets or exceeds all requirements of:
  - ANSI/NSF Std. 61 for potable water tanks of 1000 gallons or larger
  - AWWA D102 Inside System 1 and 2
  - AWWA C210-92 for use on interior of steel water pipe
  - Complies with FDA 21CFR 175.300 criteria for food contact

Color White (5500), Off White (1808), Gray (0794), Blue (4186). Other colors may be available but are limited to various approvals.

Finish Gloss

Primers Self-priming

Topcoats Acrylics, Alkyds, Epoxies, Polyurethanes for non-immersion applications.

Dry Film Thickness 4.0-10.0 mils (100-250 microns) per coat. Do not exceed 12 mils (300 microns) per coat.

Solids Content By Volume: 75% ± 2%

Theoretical Coverage Rate 1203 mil ft² (30.0 m²/l at 25 microns)
241 ft² at 5 mils (6.0 m²/l at 25 microns)
Allow for loss in mixing and application

VOC Values
As supplied: 1.80 lbs/gal (214 g/l)
Thinned:
8 oz/gal w/ #2: 2.10 lbs/gal (249 g/l)
16 oz/gal w/ #33: 2.40 lbs/gal (285 g/l)
These are nominal values and may vary with slightly with color.

Dry Temp. Resistance
Continuous: 250°F (121°C)
Non-Continuous: 300°F (149°C)
Discoloration and loss of gloss is observed above 200°F (93°C).

Wet Temp. Resistance Immersion temperature resistance depends upon exposure. Consult Carboline Technical Service for specific information. It is recommended that metal tanks operating above 140°F (60°C) be insulated.

Limitations Epoxies lose gloss, discolor and eventually chalk in sunlight exposure.

Substrates & Surface Preparation

General Surfaces must be clean and dry. Employ adequate methods to remove dirt, dust, oil and all other contaminants that could interfere with adhesion of the coating.

Steel
Immersion: SSPC-SP10
Non-Immersion: SSPC-SP6
Surface Profile: 1.5-3.0 mils (38-75 micron)

Concrete Immersion:
Concrete must be cured 28 days at 75°F (24°C) and 50% relative humidity or equivalent. Prepare surfaces in accordance with ASTM D4258 Surface Cleaning of Concrete and ASTM D4259 Abrading Concrete. Voids in concrete may require surfacing.

Performance Data

Test Method	System	Results	Report #
ASTM D4541 Adhesion	Blasted Steel 2 cts. 891	2331 psi (Pneumatic)	03457
ASTM D3363 Pencil Hardness	Blasted Steel 2 cts. 891	3H	03457
ANSI/NSF Std. 61	Blasted Steel 2 cts. 891	Pass	09434
AWWA C210 Specification	Blasted Steel 2 cts. 891	Pass	03457

Test reports and additional data available upon written request.

Carboguard® 891

Application Equipment

Spray Application (General) This is a high solids coating and may require adjustments in spray techniques. Wet film thickness is easily and quickly achieved. The following spray equipment has been found suitable and is available from manufacturers such as Binks, DeVilbiss and Graco.

Conventional Spray Pressure pot equipped with dual regulators, 3/8" I.D. minimum material hose, .070" I.D. fluid tip and appropriate air cap.

Airless Spray

Pump Ratio:	30:1 (min.)
GPM Output:	3.0 (min.)
Material Hose:	3/8" I.D. (min.)
Tip Size:	.017-.021"
Output PSI:	2100-2300
Filter Size:	60 mesh

Teflon packings are recommended and available from the pump manufacturer. Use 45:1 pump ratio for elevated applications and ½" I.D. for hose lengths greater than 50'.

Brush & Roller (General) Not recommended for tank lining applications except when striping welds. Multiple coats may be required to obtain desired appearance, recommended dry film thickness and adequate hiding.
Avoid excessive re-brushing or re-rolling. For best results, tie-in within 10 minutes at 75°F (24°C).

Brush Use a medium bristle brush.

Roller Use a short-nap synthetic roller cover with phenolic core.

Mixing & Thinning

Mixing Power mix separately, then combine and power mix. DO NOT MIX PARTIAL KITS.

Ratio 1:1 Ratio (A to B)

Thinning Spray: Up to 8 oz/gal (8%) w/#2 (NSF Std 61 approved)
Brush: Up to 16 oz/gal (13%) w/#33 (Non-NSF Std 61)
Roller: Up to 16 oz/gal (13%) w/#33 (Non-NSF Std 61)
Use of thinners other than those supplied or recommended by Carboline may adversely affect product performance and void product warranty, whether expressed or implied.

Pot Life Material begins to lose film build in 60 minutes at 75°F (24°C), and less at higher temperatures.

Cleanup & Safety

Cleanup Use #2 Thinner or Acetone. In case of spillage, absorb and dispose of in accordance with local applicable regulations.

Safety Read and follow all caution statements on this product data sheet and on the MSDS for this product. Employ normal workmanlike safety precautions. Hypersensitive persons should wear protective clothing, gloves and use protective cream on face, hands and all exposed areas.

Ventilation When used as a tank lining or in enclosed areas, thorough air circulation must be used during and after application until the coating is cured. The ventilation system should be capable of preventing the solvent vapor concentration from reaching the lower explosion limit for the solvents used. User should test and monitor exposure levels to insure all personnel are below guidelines. If not sure or if not able to monitor levels, use MSHA/NIOSH approved supplied air respirator.

Caution This product contains flammable solvents. Keep away from sparks and open flames. All electrical equipment and installations should be made and grounded in accordance with the National Electric Code. In areas where explosion hazards exist, workmen should be required to use non-ferrous tools and wear conductive and non-sparking shoes.

Application Conditions

Condition	Material	Surface	Ambient	Humidity
Normal	65°-85°F (18°-29°C)	60°-85°F (16°-29°C)	60°-90°F (16°-32°C)	0-80%
Minimum	50°F (10°C)	50°F (10°C)	50°F (10°C)	0%
Maximum	90°F (32°C)	125°F (52°C)	110°F (43°C)	80%

This product simply requires the substrate temperature to be above the dew point. Condensation due to substrate temperatures below the dew point can cause flash rusting on prepared steel and interfere with proper adhesion to the substrate. Special application techniques may be required above or below normal application conditions.

Curing Schedule

Surface Temp. & 50% Relative Humidity	Dry to Recoat	Dry to Topcoat w/ Other Finishes	Final Cure for Immersion Service	Maximum Recoat Time
50°F (10°C)	12 Hours	24 Hours	N/R*	60 Days
60°F (16°C)	8 Hours	16 Hours	10 Days	30 Days
75°F (24°C)	4 Hours	6 Hours	5 Days	30 Days
90°F (32°C)	3 Hours	4 Hours	3 Days	15 Days

These times are based on 5.4-6.6 mil (100-150 microns) dry film thickness. Higher film thickness, insufficient ventilation or cooler temperatures will require longer cure times and could result in solvent entrapment and premature failure. Excessive humidity or condensation on the surface during curing can interfere with the cure, can cause discoloration and may result in a surface haze. Any haze or blush must be removed by water washing before recoating. If the maximum recoat time is exceeded, the surface must be abraded by sweep blasting or sanding prior to the application of additional coats. For force curing, contact Carboline Technical Service for specific requirements. *Note: Final cure temperatures below 60°F (16°C) are not recommended for tank linings.

Packaging, Handling & Storage

Shipping Weight (Approximate)	2 Gallon Kit: 29 lbs (13 kg)	10 Gallon Kit: 145 lbs (66 kg)

Flash Point (Setaflash) Part A: 75°F (24°C)
Part B: 81°F (27°C)

Storage (General) Store indoors.

Storage Temperature & Humidity 40°-110°F (4°-43°C)
0-100% Relative Humidity

Shelf Life 24 months at 75°F (24°C)

carboline.

SynCor

product data **carboline** **Carbothane® 133 HB**

Selection & Specification Data

Generic Type Aliphatic Polyester Polyurethane

Description High build, low sheen finish that has excellent resistance to corrosion, chemicals and abrasion. Suitable for application over a number of Carboline primers and intermediates, this material provides very good weathering performance in a broad range of colors including metallics.

Features
- Outstanding performance properties in both mild and aggressive environments
- High build, suitable for many two-coat systems
- Available in all Carboline colors including metallic-pigmented colors
- Suitable for application direct to inorganic zincs
- Application by spray or roller
- VOC compliant to current AIM regulations

Color Refer to Carboline Color Guide

Finish Satin

Primers Refer to *Substrates & Surface Preparation*

Topcoats Carbothane® Clear Coat when required.

Dry Film Thickness 3.0-5.0 mils (75-125 microns) per coat. Dry film thickness in excess of 7 mils (175 microns) per coat is not recommended.

Solids Content By Volume: 97% ± 2%

Theoretical Coverage Rate 914 mil ft² (22.8 m²/l at 25 microns)
228 ft² at 4 mils (5.7 m²/l at 100 microns)
Allow for loss in mixing and application.

VOC Values

As supplied:	3.2 lbs/gal (383 g/l)	
Thinned:		
11 oz/gal w/ #25:	3.5 lbs/gal (420 g/l)	
18 oz/gal w/ #25:	3.7 lbs/gal (449 g/l)	

These are nominal values and may vary slightly with color.

Dry Temp. Resistance

Continuous:	200°F (93°C)
Non-Continuous:	250°F (121°C)

Discoloration and loss of gloss is observed above 200°F (93°C).

Substrates & Surface Preparation

General Surfaces must be clean and dry. Employ adequate methods to remove dirt, dust, oil and all other contaminants that could interfere with adhesion of the coating.

Steel SSPC-SP6 with a 1.0-2.0 mil (25-50 micron) surface profile for maximum protection. SSPC-SP2 or SP3 as minimum requirement. Prime with specific Carboline primers defined in *Market Guides* or as recommended by your Carboline sales representative. Refer to the specific primer's Product Data Sheet for detailed requirements of the specified primer.

Galvanized Steel SSPC-SP1 and prime with specific Carboline primers defined in *Market Guides* or as recommended by your Carboline sales representative. Refer to the specific primer's Product Data Sheet for detailed requirements of the specified primer.

Aluminum SSPC-SP1 and prime with specific Carboline primers defined in *Market Guides* or as recommended by your Carboline sales representative. Refer to the specific primer's Product Data Sheet for detailed requirements of the specified primer.

Previously Painted Surfaces Lightly sand or abrade to roughen and deglaze the surface. Existing paint must attain a minimum 3B rating in accordance with ASTM D3359 "X-Scribe" adhesion test. Prime with specific Carboline primers defined in *Market Guides* or as recommended by your Carboline sales representative. Refer to the specific primer's Product Data Sheet for detailed requirements of the specified primer.

Performance Data

Test Method	System	Results	Report #
ASTM D4541 Adhesion	Blasted Steel 1 ct. IOZ 1 ct. 133 HB	1000 psi (Elcometer)	03202
ASTM D4060 Abrasion	Blasted Steel 1 ct. IOZ 1 ct. 133 HB	21.0 mg. loss after 1000 cycles, CS17 wheel, 1000 gm. load	02941
ASTM D4213 Scrub Resistance	1 ct. 133 HB	.0027 mil/film erosion rate after 100 cycles with abrasive scrub medium.	03403
ASTM G26 Weatherometer	Blasted Steel 1 ct. IOZ 1 ct. 133 HB	No blistering, rusting or cracking after 3500 hours.	01982
ASTM G53 QUV (2500 hours w/ UVA 340 bulb)	Blasted Steel 1 ct. Epoxy 1 ct. 133 HB	Color change less than 2 McAdam units; no blistering, rusting, cracking or chalking.	03394
ASTM B117 Salt Fog	Blasted Steel 1 ct. IOZ 1 ct. 133 HB	No rusting, or blistering on plane or scribe	02585
ASTM D1735 Water Fog	Blasted Steel 1 ct. Epoxy 1 ct. 133 HB	No rusting or blistering after 3600 hours.	02063
ASTM D5894 QUV A Protection	1 ct. 133 HB	No effect on plane area and 78% gloss retention after 1906 hours of weutiny salt fog cycle	03276
ASTM D4585 Humidity	Blasted Steel 1 ct. IOZ 1 ct. 133 HB	No rusting or blistering after 3000 hours.	02585
Graffiti Resistance	Blasted Steel 1 ct. Epoxy 1 ct. 133 HB	All markings and stains removed by solvent after exposure to shoe polish, Sharpie marker, crayon, lipstick, spray cans of acrylic, Alkyd and epoxy.	03398

Test reports and additional data available upon written request.

February 2000 replaces November 1999

0800

To the best of our knowledge the technical data contained herein is true and accurate on the date of publication and is subject to change without prior notice. User must contact Carboline Company to verify specifications before specifying or ordering. No guarantee of accuracy is given or implied. We guarantee our products to conform to Carboline quality control. We assume no responsibility for coverage, performance or injuries resulting from use. Liability, if any, is limited to replacement of product. NO OTHER WARRANTY OR GUARANTEE OF ANY KIND IS MADE BY CARBOLINE, EXPRESS OR IMPLIED, STATUTORY, BY OPERATION OF LAW, OR OTHERWISE, INCLUDING MERCHANTABILITY AND FITNESS FOR A PARTICULAR PURPOSE. Carboline and Carbothane are registered trademarks of Carboline Company.

Application Equipment

Spray Application (General) This is a high solids coating and may require adjustments in spray techniques. Wet film thickness is easily and quickly achieved. The following spray equipment has been found suitable and is available from manufacturers such as Binks, DeVilbiss and Graco.

Conventional Spray Pressure pot equipped with dual regulators, 3/8" I.D. minimum material hose, .070" I.D. fluid tip and appropriate air cap.

Airless Spray

Pump Ratio:	30:1 (min.)
GPM Output:	3.0 (min.)
Material Hose:	3/8" I.D. (min.)
Tip Size:	.013-.015"
Output PSI:	2100-2300
Filter Size:	60 mesh

Teflon packings are recommended and available from the pump manufacturer.

Brush & Roller (General) Multiple coats may be required to obtain desired appearance, recommended dry film thickness and adequate hiding. Avoid excessive re-brushing or re-rolling. For best results, tie-in within 10 minutes at 75°F (24°C).

Brush Recommended for touch-up only. Use a medium, natural bristle brush.

Roller Use a medium-nap synthetic roller cover with phenolic core.

Mixing & Thinning

Mixing Power mix Part A separately, then combine and power mix. DO NOT MIX PARTIAL KITS.

Ratio 6:1 Ratio (A to B)

	88 Gal. Kit	5.0 Gal. Kit
Part A	1 gallon can (partial filled)	6 gallons can (partial filled)
UC 133	1 pint	1 gallon can (partial filled)

Thinning Spray: Up to 11 oz/gal (9%) w/ #25.
Roller: Up to 18 oz/gal (14%) w/ #25.
Use of thinners other than those supplied or recommended by Carboline may adversely affect product performance and void product warranty, whether expressed or implied.

Pot Life 4 Hours at 75°F (24°C) and less at higher temperatures. Pot life ends when coating becomes too viscous to use. MOISTURE CONTAMINATION WILL SHORTEN POT LIFE AND CAUSE GELLATION.

Cleanup & Safety

Cleanup Use #2 Thinner or Acetone. In case of spillage, absorb and dispose of in accordance with local applicable regulations.

Safety Read and follow all caution statements on this product data sheet and on the MSDS for this product. Employ normal workmanlike safety precautions. Hypersensitive persons should wear protective clothing, gloves and use protective cream on face, hands and all exposed areas.

Ventilation When used in enclosed areas, thorough air circulation must be used during and after application until the coating is cured. The ventilation system should be capable of preventing the solvent vapor concentration from reaching the lower explosion limit for the solvents used. User should test and monitor exposure levels to insure all personnel are below guidelines. If not sure or if not able to monitor levels, use MSHA/NIOSH approved supplied air respirator.

Cleanup & Safety (Cont.)

Caution This product contains flammable solvents. Keep away from sparks and open flames. All electrical equipment and installations should be made and grounded in accordance with the National Electric Code. In areas where explosion hazards exist, workmen should be required to use non-ferrous tools and wear conductive and non-sparking shoes.

Application Conditions

Condition	Material	Surface	Ambient	Humidity
Normal	65°-85°F (18°-29°C)	65°-85°F (18°-29°C)	65°-85°F (18°-29°C)	35-80%
Minimum	40°F (4°C)	40°F (4°C)	40°F (4°C)	0%
Maximum	100°F (38°C)	110°F (43°C)	110°F (43°C)	90%

Industry standards are for substrate temperatures to be 5°F (3°C) above the dew point. This product simply requires the substrate temperature to be above the dew point.
Caution: This Product is moisture sensitive in the liquid stage and until cured. Protect from high humidity, dew and direct moisture contact until cured. Application and/or curing in humidities above maximum, or exposure to moisture from rain or dew may result in a loss of gloss and/or microbubbling of the product.

Curing Schedule

Surface Temp. & 50% Relative Humidity	Dry to Handle	Dry to Recoat	Final Cure
40°F (4°C)	20 Hours	20 Hours	28 Days
50°F (10°C)	12 Hours	12 Hours	14 Days
75°F (24°C)	5 Hours	5 Hours	7 Days
90°F (32°C)	1 Hour	1 Hour	4 Days

These times are based on a 3.0-5.0 mil (75-125 micron) dry film thickness. Higher film thickness, insufficient ventilation or cooler temperatures will require longer cure times and could result in solvent entrapment and premature failure.

Packaging, Handling & Storage

Shipping Weight (Approximate) 88 Gallon Kit: 11 lbs (5 kg); 5 Gallon Kit: 64 lbs (29 kg)

Flash Point (Setaflash) Part A: 95°F (35°C); Part B: 91°F (33°C)

Storage (General) Store indoors.

Storage Temperature & Humidity 40°-110°F (4°-43°C); 0-90% Relative Humidity

Shelf Life 133 HB Part A: 36 months at 75°F (24°C); UC 133 Part B: 24 months at 75°F (24°C)

carboline

350 Hanley Industrial Court St. Louis, MO 63144-1599
314-644-1000 314-644-1617 (fax) www.carboline.com

February 2000 replaces November 1999.

To the best of our knowledge the technical data contained herein is true and accurate on the date of publication and is subject to change without prior notice. User must contact Carboline Company to verify correctness before specifying or ordering. No guarantee of accuracy is given or implied. We guarantee our products to conform to Carboline quality control. We assume no responsibility for coverage, performance or injuries resulting from use. Liability, if any, is limited to replacement of product. NO OTHER WARRANTY OR GUARANTEE OF ANY KIND IS MADE BY CARBOLINE, PRESS OR IMPLIED, STATUTORY, BY OPERATION OF LAW, OR OTHERWISE, INCLUDING MERCHANTABILITY AND FITNESS FOR A PARTICULAR PURPOSE. Carboline® and Carbothane® are registered trademarks of Carboline Company.