OPERATIONS AND MAINTENANCE MANUAL
FOR
THE OU-1 SOURCE AREA TREATMENT SYSTEM

NATIONAL AERONAUTICS AND SPACE ADMINISTRATION
JET PROPULSION LABORATORY
PASADENA, CALIFORNIA

EPA ID# CA9800013030

PREPARED FOR:

National Aeronautics and Space Administration
Management Office, Jet Propulsion Laboratory
4800 Oak Grove Drive
Pasadena, California 91101

August 2006

This operations and maintenance (O&M) manual provides guidance for the operation of the Operable Unit One (OU-1) Source Area Treatment System located at the Jet Propulsion Laboratory in Pasadena California. This manual not only contains manuals for each of the different technologies used, but also provides maintenance checklist and operational procedures for quick reference purposes. This manual describes the proper operation of each piece of equipment making up the treatment system. Below is a list of the O&M manual's eight attachments.

- **Attachment 1:** Field Log Sheets
- **Attachment 2:** O&M Maintenance Checklists
- **Attachment 3:** Chemical Handling Procedures
- **Attachment 4:** FBR Shutdown/Startup Procedures
- **Attachment 5:** Fluidized Bed Reactor System O&M Manual Vol. I
- **Attachment 6:** Fluidized Bed Reactor System Manufacturer’s Literature Vol. II
- **Attachment 7:** Trimite Filter (TM-350A) O&M Manual
- **Attachment 8:** O&M Manual for PV-810 Granular Activated Carbon System

ATTACHMENT 1:
FIELD LOG SHEETS

Date:

Time:

NASA JPL
OU1 TREATMENT SYSTEM
DAILY LOGSHEET

Operator Name:

EW-1/P-120

LT-120 _____

PI-120 _____

FI-120 _____

FT-120 _____

EW-2/P-110

LT-110 _____

PI-110 _____

FI-110 _____

FT-110 _____

Combined Influent

PI-100 _____

PT-150 _____

FI-150 _____

FT-150 _____

dP Bag Filter _____

MW Water Levels

MW-7 _____

MW-8 _____

MW-13 _____

MW-16 _____

IRZ-IW2 _____

GC-201A/B

Pinlet _____

Poutlet _____

dP Vessel 1 _____

dP Vessel 2 _____

T-201

LT-201 _____

PI-201 _____

FCV-201% _____

FCV Max Setting _____

FBR/FBR Skid

Fluidization Flow FI-301 _____

System Feed Pressure PI-305 _____

Fluidization Discharge Pressure PI-304 _____

FBR Fluidization Pressure PI-302 _____

Carbon Bed Height _____

FV-301% _____

FV Max Setting _____

Online pH Level _____

Aeration Tank

LT-401 _____

Blower Pressure PI-401 _____

P-401 Pressure PI-402 _____

LCV-401% _____

LCV Max Setting _____

Chemical Feed Systems

Nutrient P-701 Prop. Constant _____

Nutrient Flow (GPD) _____

Nutrient Tank Level (inches) _____

Acetic Acid P-702 Prop Constant _____

Acetic Acid Flow (GPD) _____

Acetic Acid Tank Level (inches) _____

Filter Coagulant P-703 Prop Constant _____

Filter Coagulant (GPD) _____

Clar. Coagulant P-705 Prop Constant _____

Clarifier Coagulant (GPD) _____

Filter Polymer P-704 Prop. Constant _____

Filter Polymer (GPD) _____

Clar. Polymer P-706 Prop Constant _____

Clarifier Polymer Flow (GPD) _____

Chemicals Needed: _____

_____

Trimite Filter

Filter Influent Pressure PI-501 _____

Filter Effluent Pressure PI-502 _____

Turbidity AIT-501 _____

T-501

LT-502 _____

Sump

Water Level _____

Combined Effluent

PI-601 _____

PT-601 _____

LCV-601% _____

LCV MAX SETTING _____

IW-1/P-610

LT-610 _____

PI-610 _____

FI-610 _____

FT-610 _____

IW-2/P-620

LT-620 _____

PI-620 _____

FI-620 _____

FT-620 _____

Notes/Alarms:

_____

_____

_____

_____

_____

_____

_____

_____

NASA JPL OU1 Treatment System On-Site Water Quality Parameters Log Sheet

		Combined Wellhead Influent							FBR Inlet											FBR Skid On-Line	
Date	Time	pH	Temp.	Conductivity	DO	ORP	ClO_4^-[a]	Nitrate-N	pH	Temp.	Conductivity	DO	ORP	ClO_4^-[a]	Sulfide	Nitrate-N	Nitrite-N	Sulfate	Ammonia-N	pH	Temp.
			°C	µS/cm	mg/L	mV	mg/L	mg/L		°C	µS/cm	mg/L	mV	mg/L	µg/L	mg/L	mg/L	mg/L	mg/L		°C
1	2	3	4	5	6	7	8	9	10	11	12	13	14	15	16	17	18	19	20	21	22

		FBR Recycle/Outlet													Combined Wellhead Effluent						
Date	Time	pH	Temp.	Conductivity	DO	ORP	ClO_4^-[a]	Sulfide	Nitrate-N	Nitrite-N	Sulfate	Ammonia-N	PO_4	Filtered TOC[b]	pH	Temp.	Conductivity	DO	ORP	ClO_4^-[a]	Nitrate-N
			°C	µS/cm	mg/L	mV	mg/L	µg/L	mg/L	mg/L	mg/L	mg/L	mg/L	mg/L		°C	µS/cm	mg/L	mV	mg/L	mg/L
1	2	23	24	25	26	27	28	29	30	31	32	33	34	35	36	37	38	39	40	41	42

Notes:

Shaded cells are for parameters to be sampled only twice per week.

a) Perchlorate readings using Oakton Acorn Ion 5 Meter.

b) Sample must be filtered with 0.45 micron filter.

Remarks: _____

_____

_____

_____

Meter Calibration:

_____

_____

ATTACHMENT 2:
O&M MAINTENANCE CHECKLISTS

OU-1 Routine Maintenance Schedule

As Needed Maintenance Based on Daily Monitoring

- Perform visual assessment of equipment on a daily basis for unusual conditions.
- Check water level sensors in wells for proper operation.
- Check pressure transducers at injection wells for proper operation.
- Check biomass separator for proper operation.
- Check that in-bed cleaning is initiated when FBR bead height reaches above 17’ 3”
- Clean strainer on FBR skid if flow rate falls below 27” water.
- Change out bag filter unit based on daily pressure readings.
- Clean poly tanks if an abnormal amount of growth or accumulation is noticed.

Weekly Items

- Trimite Filter
  - The flow in each tank (e.g. T-201, T-501) should be observed at least once a week.
  - Observe a complete backwash cycle. The cycle can be initiated with the "Automatic Backwash Manual Initiate" switch on the plant controller. Make sure that the air is stopped before the water level reaches the lip of the filter weir into the waste trough.
  - Also, observe the clarifier flush that takes place during the backwash. Check to make sure that the adsorption media is becoming totally fluidized. If you have trouble seeing the media through the screen, you can try pushing a piece of stiff wire through the openings in the screen (be careful not to damage it). Put a 90 degree bend about 3-4 inches from the bottom of the wire. When inserted down into the media, you can feel if the media is fluidized. The wire can be easily moved around through a fluidized bed. It may take a while for the media to fluidize all the way to the top.
  - Inspect the filter media surface. Agitate the media with a rake if there appears to be an accumulation of floc that was not washed out during the backwash cycle. The media should be clean after the next cycle. Re-agitate if it is not. A clean filter will run longer between backwash cycles and should save finished water.
  - Check the condition of the screen surface on the adsorption media retainer. You may want to drain the clarifier down to bring the water level below the screen, to be able to see it better. Wash off any accumulation of floc with a hose.
  - Observe the air distribution during a clarifier flush. You can watch the water surface on the clarifier. A blocked lateral or diffuser can be detected.

- Electron Donor & Nutrient Feed Pumps
  - Thoroughly examine physical components of pump and injection lines for leaks or damage.
  - Remove injection quills and check for blockages. Clean as needed.
  - Verify flow readings with calibration columns.

- Polymer Mixing Units
  - Examine physical components for leaks or damage.
  - Clean strainers with water to remove any build up or debris.

- Extraction/Injection Wells
  - Examine well head for any abnormalities (leaks, cracks, damage, etc.)
  - Examine pressure gauges, transducers and relief valves for proper operation.

Monthly Items

- Electrical Vaults
  - Check vaults for excess water or debris.

- Pipeline
  - Check pipeline for any abnormalities (leaks, cracks, damage, etc.)
  - Examine condition of all components associated.

- Blower
  - Grease blower components per manufacture specifications.
  - Check air filter for cleanliness. Change if needed.

- Emergency Shower
  - Check for any leaks or damage to the unit
  - Run shower and eye wash for 5 minutes to clear out any rusty or stagnant water

- Pressure Gauges
  - Check for leaks at connection point.
  - Check glycerin levels.
  - Ensure that vents are in open position.

- Air Actuated Valves
  - Verify that air fittings have no leaks.

- Ball Valves
  - Check for leaks at fitting and valve.

- Dwyer Flow Meters
  - Check for leaks at connection points.
  - Clean inside of meter as needed.

- Signet Flow Meters
  - Check paddlewheel for proper operation. Clean as needed.
  - Ensure that Display is working properly and that weather tight box is sealed.

- Polymer Mixing Units
  - Check for leaks.
  - Flush system with potable water.
  - Drain chemical mixing tanks and clean out any sludge in the bottom of the tanks. Check chemical feed pumps, lines, check valves, and strainers for any accumulation of chemical residue. Clean or flush the pumps according to the manufacturer's recommendations.

- Sulzer Pumps
  - Verify that oil level is appropriate (center of sight glass).

- Summit Pumps
  - Verify that oil level is appropriate (center of sight glass).

- Compressor
  - Verify that oil level is appropriate (center of sight glass).

- LGAC Unit
  - Visual check of pressure gauges, adjustments to valves and regulators, and tightening of flanges and connections to eliminate leakage during feed mode and/or backwashing.

- Trimite Filter
  - Observe and check the functioning of all automatic valves. Follow any manufacturer's recommendations for maintenance of actuators and positioners.
  - Check and adjust the level of the water over the filter by changing the float arm adjustment. The water level should be just below the weir into the filter compartment. Observe and check the headloss switch adjustment. The filter switch should start a backwash cycle automatically when the headloss gauge reads 7-8 feet of water headloss. The clarifier switch should be set at 3-4 feet of water increase above static conditions.
  - All pumps should be checked for leaks at the seals and for overall function. Motor bearings should not be noisy.

3rd Month Items

- Trimite Turbidity Meter
  - Verify Calibration.
  - Verify that light bulb is working properly.

6th Month Items

- Inline pH Probe
  - Clean probe of any growth or build up.
  - Verify calibration

- Oakton Perchlorate Probe Replaced

8th Month Items

- Aeration Blower B-401
  - Change synthetic oil in blower use only approved synthetics.
  - Re-grease bearings.

- Sulzer Pumps
  - Re-grease bearings with approved grease.

- Summit Pumps
  - Re-grease bearings with approved grease.

- Trimite Filter Motors
  - Re-grease bearings with approved grease.

Annual Items

- Compressor
  - Change oil, use only approved oil.

- Sulzer Pumps
  - Change oil, use only approved oil.

- Summit Pumps
  - Change oil, use only approved oil.

- Trimite Filter
  - Drain each tank; the other(s) can stay on-line.
  - Check the filter media for "mudballs" or any other accumulation of solids that may not have washed out during backwash cycles.
  - As water is drained from the clarifier, look at the water to see if it contains a significant amount of sediment, or other debris. Remember, the drain is screened inside the tank.
  - If a blanket of sediment is suspected to be present below the media, it should be removed. See the USFilter O&M manual section on Adsorption Media Handling.

- Check the entire surface of the screen on the clarifier. If any obstinate materials are enmeshed in it, remove the screen assembly, and clean it away from the tank.

- Tank 201, 202, 401, 501 and 801 Manual Level Switches
  - Fill each tank individually to the height required to engage the manual level switches, confirm proper operation.
  - Drain each tank back down to normal operating levels.

- Sump (Tank 801) and Sump Pump (P-801)
  - Measure the level of sludge at the bottom of the sump, if levels are above 12" in height use the sump pump to remove all contents the sump. During this time stop all backwashing and flushing of Trimite filter. Use potable water to rinse sump bottom. Ensure that proper flow is moving from pump 801 to the clarifier.

<u>As Needed Items</u>

- LGAC Carbon Changeout
  - Coordinate and supervise the carbon change-out activities at breakthrough of the lead LGAC vessel. Refer to the USFilter PV-810 O&M Manual for proper changeout procedure. After changeout, switch the lag vessel to the lead vessel.

- Waste Management
  - Perform waste management activities associated with on-site laboratory wastes, spent bag filters, and other non-hazardous solid waste generated by operational activities.

- Injection Well Rehabilitation
  - If a significant degradation in performance is experienced, it may be necessary over the lifetime of the project to redevelop the injection wells. The redevelopment techniques may include back-flushing, swabbing, brushing, pumping, jetting, chlorination, or other chemical treatment to restore the well capacity.

ATTACHMENT 3:
CHEMICAL HANDLING PROCEDURES

Specific Chemical Handling Instructions

Receipt and handling of required chemicals for system operation is described below:

Acetic Acid 50% Solution

This chemical is delivered in 330 gallon totes. These totes are fork lift ready and must be handled only with a fork lift that can handle the total weight. The totes must be moved individually and with extra care because of there size. The totes are to be stored in a chemical containment berm. When handling or transferring the chemical ensure that all precautions discussed in the attached MSDS are followed.

UREA /DAP Blend

This nutrient is delivered in 55 gallon poly drums. These drums are to be moved onto the forklift platform, strapped down tightly, and moved in groups of no more than 4 at a time. When moving the drums special attention must be used to monitor the security of the straps used to anchor the drums. When handling or transferring the chemical ensure that all precautions discussed in the attached MSDS are followed.

Phosphoric Acid

This chemical is delivered in 4L glass carboys and requires that they be handled by hand one at a time. When handling or transferring the chemical ensure that all precautions discussed in the attached MSDS are followed.

Ferric Chloride

This chemical is delivered in 55 gallon poly drums. These drums are to be moved onto the forklift platform, strapped down tightly, and moved in groups of no more than 4 at a time. When moving the drums special attention must be used to monitor the security of the straps used to anchor the drums. When handling or transferring the chemical ensure that all precautions discussed in the attached MSDS are followed.

Polymer

This chemical is delivered in 55 gallon poly drums. These drums are to be moved on to the forklift platform, strapped down tightly and moved in groups of no more than 4 at a time. When moving the drums special attention must be used to monitor the security of the straps used to anchor the drums. When handling or transferring the chemical ensure that all precautions discussed in the attached MSDS are followed.

ATTACHMENT 4:
FBR SHUTDOWN/STARTUP PROCEDURES

FBR Procedures

The following are steps be taken to ensure proper shutdown and start up of the FBR portion of the system:

Shut Down:

- Ensure that the treatment plant is in a recycle mode and not in a forward feed mode, if it is in forward feed mode put it into recycle mode.
- Manually turn off Pump 301-A or Pump 301-B depending on which pump is in operation at the time. This operation should be done using the PLC controls.
- Monitor FCV-301 to ensure that it is properly closing after the pump is taken off line.
- The FBR system is now in a non-fluidized state and remaining in this state for a time frame over 48 consecutive hours may result in adverse impacts to the condition of the bed or to the biological treatment process. See FBR O&M manual for activities needed to maintain the bed during a prolonged shutdown.

Start Up:

- Ensure that power is being supplied to only the fluidization pump that will be operating. Only one pump is used at a time.
- Before starting the pump open the proper valves on the fluidization skid to allow for flow to access only the pump that is in use.
- Verify that proper air is being supplied to FCV-301. The valve needs air to operate properly.
- Use the PLC controls to activate the desired fluidization pump.
- Hold the “on” button for 5-15 seconds to allow for required pressure to build up.
- The FBR in now fluidized and running.

ATTACHMENT 5:
FLUIDIZED BED REACTOR SYSTEM O&M MANUAL VOL. I

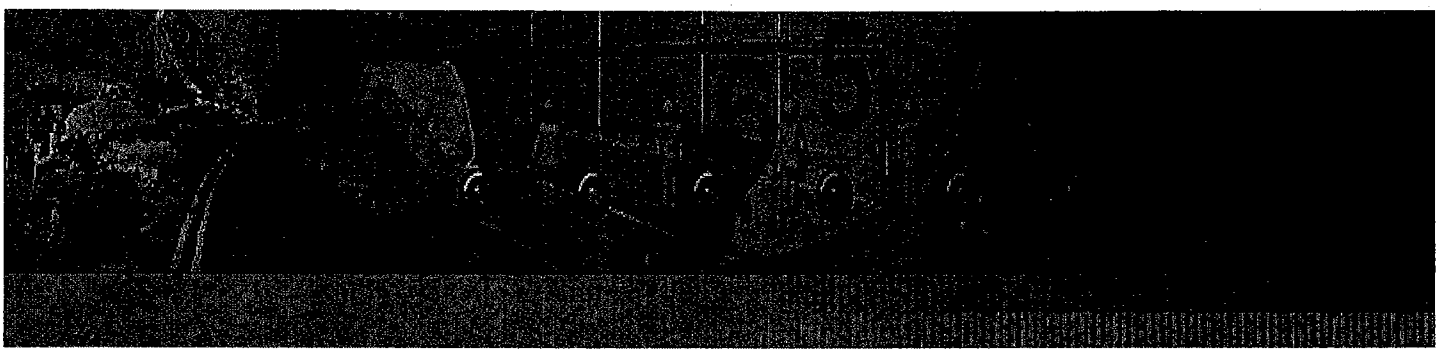

Shaw® Shaw Environmental, Inc.

FLUIDIZED BED REACTOR SYSTEM FOR NASA – JPL PASADENA, CA

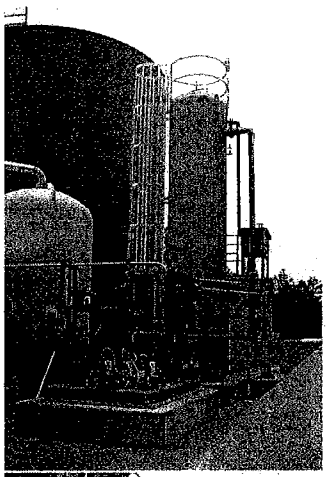

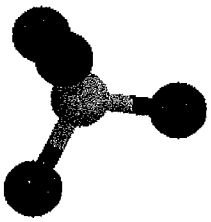

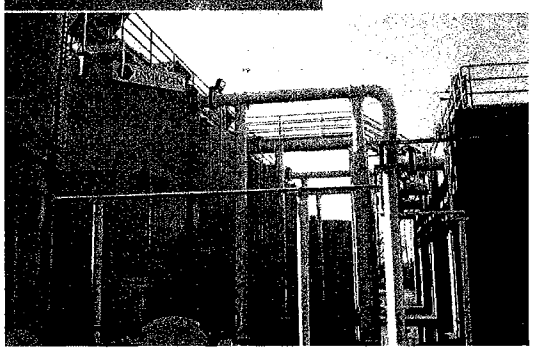

OPERATION AND MAINTENANCE MANUAL

SEPT 2004

Shaw Project 100770

OPERATION AND MAINTENANCE MANUAL

FOR THE

FLUID BED REACTOR SYSTEM

NASA JPL OU-1 SITE
PASADENA, CA

PREPARED BY:

SHAW ENVIRONMENTAL, INC.
17 PRINCESS RD
LAWRENCEVILLE, NJ

PROJECT NO. 100770

OPERATION AND MAINTENANCE MANUAL

FLUID BED PERCHLORATE TREATMENT SYSTEM

TABLE OF CONTENTS

1 SAFETY — *1*

1.1 General — 1

1.2 Mechanical Safety — 1
- 1.2.1 Mechanical Installation — 1
- 1.2.2 Mechanical Operation — 1
- 1.2.3 Mechanical Maintenance — 1
- 1.2.4 Manway Closures — 2
- 1.2.5 Entering a Confined Space — 2

1.3 Electrical Safety Precautions for Control Panels — 2
- 1.3.1 Electrical Installation — 3
- 1.3.2 Electrical Operation — 3
- 1.3.3 Electrical Maintenance — 3

1.4 Chemical Safety — 4

2 SYSTEM DESCRIPTION — *5*

2.1 Introduction — 5
- 2.1.1 Feed Flow Control — 5
- 2.1.2 Fluidized Bed Reactor — 5
- 2.1.3 Aeration — 6
- 2.1.4 Trimite Filter — 6
- 2.1.4.1 Filtering Cycle — 6
- 2.1.4.2 Adsorption Clarifier Flush Cycle — 6
- 2.1.4.3 Mixed Media Filter Backwash Cycle — 7
- 2.1.5 Clarifier — 7

2.2 Chemical Feed Systems — 7
- 2.2.1 Polymers — 7
- 2.2.2 Nutrient — 8
- 2.2.3 Electron Donor — 8

2.3 Utilities — 8
- 2.3.1 Compressed Air — 8
- 2.3.2 Process Air — 8
- 2.3.3 Service Water — 8
- 2.3.4 Electric Power — 8

2.4 Control System Overview — 9

2.5 Treatment Plant Site — 9

3 FBR system operation — *10*

3.1 FBR SYSTEM PROCESS STARTUP — 10
- 3.1.1 Startup Precautions — 10
- 3.1.2 General Startup — 10

3.1.3 Carbon Media Loading 11
3.1.4 Wash Media and Establish Fluidization Loading 12
3.1.5 Process Feed Startup Plan 13
3.1.5.1 General Information 13
3.1.5.2 Inoculation 13
3.1.6 Initial Feed 14
3.1.7 Startup Equipment, Test Kits, and Chemicals 14

3.2 FBR Operation 17
3.2.1 FBR Operating Modes 17
3.2.1.1 Shutdown Modes 17
3.2.1.2 Feed Stopped and Run Modes 18
3.2.2 Operator Interface Terminal 18
3.2.3 Bed Height Control System 19
3.2.3.1 Biomass Separator 19
3.2.3.2 In-Bed Cleaning System 20

3.3 FBR MONITORING 21
3.3.1 System Monitoring 21
3.3.2 Nutrient and Electron Donor Requirements 21
3.3.3 Determining Settled Bed Height 22
3.3.4 Media Addition and Removal 22
3.3.4.1 Media Addition 22
3.3.4.2 Media Removal 23

TABLES

1. MONITORING PROGRAM FOR FLUIDIZED BED REACTOR SYSTEM

APPENDICES

Appendix A – Bill of Materials

Appendix B – FBR Monitoring Logsheet

Appendix C – Operator Interface Terminal (HMI)

Appendix D – FBR Valve Position Chart

Appendix E – FBR Vessel and System Drawings

Appendix F – Process Control and Assembly Specification

Appendix G – Nutrient and Electron Donor Spreadsheet Requirement

1 SAFETY

This section of the manual provides safety information for the Fluidized Bed Reactor (FBR) System for the source zone defined by Operable Unit 1 (OU-1) at NASA JPL in Pasadena, California.

1.1 GENERAL

This component/system should be operated by trained, authorized personnel and only under the conditions for which it was originally designed. Any modification to the components or materials used may result in an unstable or unsafe condition. Always consult the manufacturer prior to making any changes from the original design configuration.

Safety is to be exercised at all times during installation, operation, and maintenance. Operation of equipment should conform to established plant safety standards. The Department of Labor Occupational Safety and Health Act as printed in 29 Code of Federal Regulations (29 CFR) Part 110 should be followed. Plant areas where the equipment is being tested or adjusted during maintenance should be isolated by barriers (with signs) to prevent accidental entry to the area. A Site Specific Health and Safety Plan should be consulted for detailed safety protocols, personal protection, and emergency procedures.

1.2 MECHANICAL SAFETY

1.2.1 Mechanical Installation

During installation of mechanical components, always protect body and limbs from being crushed or pinched during equipment placement. Make sure all equipment is properly affixed to floor or pad to prevent shifting due to operational vibrations. Vibration pads, if specified, may be installed to minimize vibrations generated by operating equipment. Insure all mounting/anchoring studs and bolts are tight (may become loose in shipment). When attaching piping, use proper gaskets rated for the liquids and gases to be transported.

1.2.2 Mechanical Operation

Mechanical equipment such as mixers, pumps, blowers, and electrically actuated valves present hazards to workers. Always observe the following precautions when working with mechanical equipment which can move.

1. Hearing protection should always be worn to prevent hearing damage/loss caused by loud machinery.
2. Mechanical equipment may start abruptly without warning if in the "auto" position or if stopped by an internal thermal breaker.
3. Keep hands away from moving parts and avoid pinch points such as blower belt drives.
4. Proper protective clothing and equipment must be worn at all times.

1.2.3 Mechanical Maintenance

1. Personnel should protect themselves from mechanical hazards of rotating equipment.
2. Turn off electric power and follow proper "Lock Out / Tag Out" procedures.

3. Insure all vessels, piping, tubing, and other lines or devices are properly drained and ventilated.
4. Be aware that piping and tubing may contain liquids that are under pressure and/or present a chemical hazard to breathing and/or exposed skin.
5. Equipment designed to handle liquids always presents a potential splash hazard during service periods.

1.2.4 Manway Closures

Manways are used to provide access to the inside of tanks and closed vessels for inspection, cleaning or other purposes. When a vessel is being used the manway is tightly closed. A gasket provides a tight seal between the manway cover and the vessel.

WARNING!!! BEFORE OPENING A MANWAY:

1. Be sure that nearby eye wash basins and safety showers are available and working.
2. Shut down the system. Close and tag all valves to the tank (liquid, chemical).
3. Reduce pressure of the vessel to zero.
4. Leave a vent open. Drain all liquids from the vessel. (Some vessels with internal compartments require that the internal compartments be drained first.)
5. Tag the control panel "OUT OF SERVICE". Be sure that the vessel has in fact been drained. Use the sample lines and valves that are provided for the vessel.
6. Because gasket seals, which have been under compressive pressure (from vessel pressure or from cover fastening pressure), may securely hold a manway cover, first just loosen the fastenings. Move the cover to separate it from the vessel (tap, bump or pry it, taking care not to damage the tank lining). Check that there is no further internal pressure. Personnel should not be in front of, or below, the manway when the cover is removed because in some cases, the contents may be retained in the manway nozzle. Remove the cover.
7. Secure the manway cover with davit, ropes or chain.

1.2.5 Entering a Confined Space

See the Site Specific Health and Safety Plan before entering any confined space.

WARNING!!! Anyone who operates or maintains the equipment must be aware of all of the hazards presented by potentially oxygen-poor, asphyxiating, and toxic atmospheres within a reactor vessel or other closed vessels. They should also be aware of common industrial safety hazards and other safety and health hazards that are present in water treatment facilities. Safety precautions appropriate for all of these hazards must be taken. Failure to do so may result in serious injury, illness, or death.

1.3 ELECTRICAL SAFETY PRECAUTIONS FOR CONTROL PANELS

WARNING!!! Electrical equipment and assemblies always contain the possibility of hazards from electrical shock or short circuits. Therefore proper caution must be observed with the installation, operation, and maintenance of the control panel or control cabinets.

1.3.1 Electrical Installation

Qualified electricians, following the diagrams and schematic wiring diagrams supplied by USFILTER and SHAW E&I, shall make electrical connections. If there are questions regarding interpretation of the drawings, USFILTER and SHAW E&I engineers should be consulted. Before electrical power is turned on to the control panel or cabinet, make sure that the metal enclosure is properly grounded. Before electrical power is turned on to the control panel or cabinet, the internal connections should be checked for accuracy with the Wiring Diagrams and Schematic Wiring Diagrams supplied.

1.3.2 Electrical Operation

Automatic control circuits have been designed with the intention of properly controlling the process and to provide operating safety for equipment and personnel. Reasonably foreseeable component failures are considered, and interlocks are provided to safeguard against damage caused by such failures. It must be remembered however, that component failures will probably result in degradation of system performance. Therefore, it is necessary that competent operating personnel who understand the functions of the systems make periodic checks of the system performance (for example: valve and pump operating sequences, instrument readings and calibrations, and chemical tests).

Manual control features are built into most systems that are designed for automatic operation. These make it possible to operate the equipment in case an automatic control has failed. The manual control features also make it possible to make experimental changes in the process sequences without having to reconfigure the automatic controls. When operating with manual override to automatic controls, the operator shall be familiar with the equipment and understand its operation and follow the valve-operating sequence given in the instruction manual.

1.3.3 Electrical Maintenance

The tracing of circuits, removal or replacement of components, or revisions to electrical circuits, should be done by a qualified electrician. All power to any electrical device inside the control panel with which the worker might come in contact is to be turned off. This usually means every circuit within a control panel or cabinet is to be shut off. On large control panels, it might be possible to remove voltage from one section while leaving other sections operating. In order to properly shut off the power at the control panel, the following rules must be observed:

1. Adhere to plant specific "LOCK OUT / TAG OUT" procedures.
2. Consult the schematic wiring diagrams to determine which disconnecting switches need to be opened to shut off all of the power at the control panel. Very often it is not sufficient to disconnect the main power source to the control panel. Motor control circuits are usually supplied with power from the motor starters and have to be disconnected by opening the motor circuit switch ahead of the motor starter.
3. Personnel familiar with the plant installation and the location of disconnect switches should be consulted.
4. Shut off all power to the control panel. The switches should be locked or tagged in the OFF position until work inside the control panel is completed.

5. After the switches have been turned OFF, but before work is started in the control panel, make voltage checks on the circuits inside the control panel. This is to confirm that the correct switches have been opened and that circuits have no voltage present.

Sometimes troubleshooting must be performed while the system is in operation and power is ON while checking for the presence or absence of voltage at suitable test points in a control circuit. When checking circuits with the voltage ON, the following rules must be observed:

1. Only a person who understands the operation of electrical controls, and who recognizes electrical terminals and other exposed conducting surfaces that might have voltage present, may perform this work.
2. The area of work must be properly illuminated so that all exposed electrical parts can be readily seen.
3. The person performing the work should have the wiring diagrams at hand, and shall use them to locate the points where voltage is to be checked to determine circuit continuity and operation.
4. While work is performed in a control panel with voltage present, another person must be available to give assistance in case of accident. The second person should be familiar with the voltage shut-off procedure, and be trained in artificial respiration.
5. Make sure that there is adequate clearance around the work area to prevent working in a cramped position.
6. It is recommended that soft, thin dry leather gloves, or meterman's gloves, safety glasses and rubber soled shoes be used.
7. Rubber floor mats should be provided around the area.

1.4 CHEMICAL SAFETY

See the Site Specific Health and Safety Plan for chemical hazards and handling procedures.

1. Consult Material Safety Data Sheets prior to potential exposure to specific chemicals used with the operation of the system.
2. Proper protective clothing and equipment must be worn at all times.
3. Be aware that piping and tubing may contain liquids that are under pressure and/or present a chemical hazard to breathing and/or exposed skin.
4. Equipment designed to handle liquids always presents a potential splash hazard during service periods.

2 SYSTEM DESCRIPTION

2.1 INTRODUCTION

The system is designed to remove perchlorate from contaminated groundwater at the OU-1 site. The reader is referred to the system Piping and Instrumentation Drawings and the Process Flow diagram in Appendix E for additional information. The major unit operations/treatment vessels included in the biological system are:

1. (1) fluidized bed reactor – 11.5 ft. diameter X 24 ft. straight side with carbon media
2. (1) aeration tank – 9 ft. diameter X 20 ft. straight side (T-401).
3. (1) Trimite filter – 20 ft. diameter X 18 ft. straight (T-602).
4. (1) clarifier (T-802)

2.1.1 Feed Flow Control

The system is designed to accept groundwater feed at up to 250 gpm maximum hydraulic loading. Equalized feed from the FBR Feed Tank enters the FBR system at the fluidization pump skid. The operator controls the feed at the Operator Interface Terminal (or Human Machine Interface, HMI) that provides the ability to set the system feed flow at a constant rate or to control based on maintaining level in the equalization tank.

2.1.2 Fluidized Bed Reactor

On the FBR Pump Skid the groundwater feed to the FBR vessel is combined with recycle flow, 50% acetic acid solution (v/v), and nutrient solution. The nutrient and acetic acid solution are automatically controlled in proportion to the feed flow to the FBR. The acetic acid solution from tank T-702 is added to the FBR via pump P-702. Nutrient solution flow from tank T-702 is controlled to each FBR in proportion to the feed flow to each FBR (via pump P-701). The FBR vessel contains an integral fluidization distribution and effluent collection system. These internal components are designed to enhance uniform flow distribution. Microorganisms metabolize the acetic acid solution and utilize the oxygen, nitrate, perchlorate, and chlorate contained in the feed water. These contaminants are converted to harmless products such as nitrogen, chloride, and carbon dioxide in the process. As the contaminants are converted, the microbes grow and form a film on the fluidized sand media.

As with virtually all biological processes, an excess biomass byproduct is produced. As biomass accumulates on the FBR media, the fluidized bed height expands. Some excess biomass is removed by the shear that is caused by the normal flow through the bed. Additional excess biomass is removed from the fluidized beds by operation of the biomass separators. Provisions for collection and removal of separated excess biomass are included in the system design. This stream flows by gravity at an operator-adjustable flow to the backwash holding sump, and then it is pumped to the clarifier (T-802). Operation of the biomass control systems will be based on bed height and bed sampling data, as well as instructions provided in the system operating manual(s).

The biomass control system also includes provisions for removal of excess biomass from a lower level within the fluidized bed. This system will be operator-controlled based on the measured FBR bed heights and instructions provided in the system operating manual(s).

2.1.3 Aeration

Nitrate, chlorate and perchlorate are expected to be reduced to effluent design concentrations in the effluent of the FBR. This stream flows to the aeration tank (T-401). A blower, B-401 produces compressed air for fine bubble aeration to approach saturation concentrations of dissolved oxygen in the water. The benefits of this aeration process include meeting the discharge dissolved oxygen requirements and the partial oxidation of residual organics and trace amounts of reduced sulfur that may be present in the FBR effluent. The air effluent from the aeration tank discharges to the atmosphere. The aeration effluent water containing biomass and is pumped to the filter.

2.1.4 Trimite Filter

Excess biomass and solids from the FBR pass through the well-mixed aeration tank and are pumped into the Trimite Filter. The Trimite Water Treatment System is a preassembled unit designed by USFilter/CPC to reduce turbidity by removing suspended solids and improving water quality. Refer to Manufacturer's Literature in Volume II for complete information on the Trimite Filter including installation instructions, equipment cut sheets, and a description of the adsorption clarifier flush and the filter backwash sequence.

2.1.4.1 Filtering Cycle

Coagulant and polymer are injected into the main feed water line. The water enters the Adsorption Clarifier where an upflow treatment process combines flocculation and clarification.

The chemically treated water flows upward through the adsorption media and the media retainer. The water is distributed by the influent header and by the headloss through the media. It then flows over the trough weir and onto the Mixed Media filter. The final product water passes through the filter media into the Triton underdrain system, which carries it out of the filter tank and into the Filter Effluent/Backwash Tank(T-501).

The effluent discharge line contains a modulating effluent valve. This valve is used for ON/OFF operation as well as flowrate control from the filter section. A displacer-operated pneumatic level controller located in the filter provides a signal to the positioner on the effluent valve. By maintaining a constant level in the filter, the flow out of the filter is held the same as the flow into the clarifier(use Adsorption Clarifier) regardless of head loss variations caused by solids capture in the filter bed or changes in the flow into the clarifier.

2.1.4.2 Adsorption Clarifier Flush Cycle

As the filter cycle proceeds, solids are removed by the Adsorption Clarifier media (Note: there is an Adsorption Clarifier and a separate clarifier vessel (T-802)). As the solids accumulate,

they cause the head loss across the clarifier to increase. This is detected by a pressure gauge and switch assembly measuring the pressure in the area beneath the media. When the pressure increase reaches a preset level, the switch closes and a flush (cleaning) cycle is initiated. There is a second pressure switch, set at a higher level, which, if actuated, will shut down the treatment unit. This is a precaution against damage to the tankage and/or retaining assembly.

Besides high headloss, a flush cycle can also be initiated by a timer (programmed into the PLC), or by manual means (push-button on the control panel). Also, the plant is designed so that a flush cycle takes place during a filter backwash. (This can be changed, if desired--see the Control System Section.)

The flush cycle can be expected to take place more often than a filter backwash. It is normal to have two to four flushes during a filter run.

2.1.4.3 Mixed Media Filter Backwash Cycle

After a period of time, sufficient solids will be trapped in the filter to increase the headloss at which time a backwash cycle is started. The method of initiation is similar to the flush initiation, by means of a headloss gauge and vacuum switch.

When a Mixed Media filter backwash cycle is initiated, it generally includes a flush cycle for the adsorption clarifier that proceeds concurrently as described above.

Note that during a backwash of the mixed media filter, the influent flow continues uninterrupted to the filter providing continuous water production. The influent flow can continue because as the water level rises in the filter due to the backwash, the flowrate of water exiting the filter increases in an effort to maintain a constant level.

2.1.5 Clarifier

Excess biomass from the FBR and filter backwash drain to a holding sump (T-801). A submersible pump(P-801)located in the sump pumps the water containing suspended solids to a cone bottom clarifier vessel (T-802). Clean water overflows from the clarifier back to the feed tank(T-201) and the solids settle to the bottom of the cone.

2.2 CHEMICAL FEED SYSTEMS

2.2.1 Polymers

Both the Clarifier and the Trimite Filter use a coagulant and a polymer for assistance in separating solids from the liquid stream. A dedicated polymer feed system serves each point of use. A polymer feeder, P-704, is used to mix the polymer with service water and to transfer the resulting polymer mix to the filter feed. The polymer feed to the filter is controlled based on the flow of water, as measured by the FBR flow meters, and is operator-adjustable.

The polymer feed system for the clarifier, T-802, is similar to that for the Tri-mite filter. Neat polymer is stored in a plastic tote, T-706, which is supplied by the polymer vendor. A polymer feeder, P-706, is used to mix the polymer with service water and to transfer the resulting polymer mix to the influent to the clarifier. The polymer feed to the clarifier is controlled based on the operation of the pump in the Backwash Holding Sump. A chemical feed pump, P-705, adds coagulant into the influent line of the clarifier.

2.2.2 Nutrient

Nutrient solution for the biological reaction will consist of a 39% urea/di-ammonium phosphate (DAP) solution. The nutrient is stored in a tank, T-701, which will be provided by others. An electric diaphragm pump, P-701, is used to pump the nutrient to the FBR. The rate of nutrient addition to the FBR is in proportion to the feed flow to the FBR, and is operator-adjustable using a proportionality constant on the HMI. The nutrient feed will be adjusted based on residual phosphorus in the effluent in order to maintain effluent levels within permitted values.

2.2.3 Electron Donor

Acetic acid will be used as the electron donor for the treatment system. The acetic acid will be purchased in 50% concentration(v/v). The acetic acid will be stored in a tank (T-702), provided by others, located on the side of the treatment plant. An electric diaphragm metering pump, P-702, is used to pump the acetic acid to the FBR. The rate of acetic acid addition to each FBR is in proportion to the feed flow to each FBR, and is operator-adjustable using a proportionality constant on the HMI.

2.3 UTILITIES

2.3.1 Compressed Air

Compressed air is necessary to operate equipment and instrumentation. It is the customer's responsibility to provide clean dry instrument quality air.

2.3.2 Process Air

A dedicated blower, B-401, provides the process air required for the aeration tank T-401.

2.3.3 Service Water

Treated filter effluent will be the main source of service water for the treatment plant. The service water will be tapped on the pressure side of the filter effluent pumps, P-601. This will provide service water at approximately 35 psig. Service water will be used with the in-bed cleaning system and the polymer blend system.

2.3.4 Electric Power

All power to run the equipment for the FBR treatment facilities will come from the main electrical panel. The system requires 480 VAC, 3 phase, 60 Hz electrical supply.

2.4 CONTROL SYSTEM OVERVIEW

US Filter will furnish a complete electrical control system for the fluidized bed system. It will contain an Allen-Bradley PLC, Model SLC-5/03. All I/O will be contained in a cabinet with NEMA rated terminals for connection of field wiring. The system will be programmed to operate in accordance with the Process Control and Assembly Specification in Appendix F The operator will control the system using a keypad and screen on the front of the Fluid Bed Panel. The Operator Interface Screens are shown in Appendix C.

All automatic electrical devices (including motors) will be controlled at the FBR Panel through the PLC, and displayed on screen. This will include approximately (15) motors, approximately (20) 4-20 mA transmitters, and (3) 4-20 mA control valves. Manual controls will be provided where required.

2.5 TREATMENT PLANT SITE

The treatment plant will be located in the source zone within Operable Unit 1 (OU-1) at NASA JPL in Pasadena, California. All equipment will be installed outside on a concrete slab. An overall plant arrangement is shown in Drawing M-1. The equipment will be installed on one single concrete slab, approximately 26 ft. X 130 ft. The slab will have a curb all around to provide containment for the tanks within the containment area. The chemical feed tanks are located on the north side of the plant to provide easy access.

3 FBR SYSTEM OPERATION

3.1 FBR SYSTEM PROCESS STARTUP

3.1.1 Startup Precautions

The precautions listed below are to be carefully followed to ensure maximum system efficiency and equipment life.

CONTINUOUS OPERATION

For any biological process such as the FBR system, the health and efficiency of the biological activity that performs the waste contaminant conversion can only be maintained if the biomass receives a proper supply of electron acceptor (i.e. nitrate and perchlorate in groundwater), electron donor substrate, and nutrients on a continuous basis. As such, it is very important to minimize down time, and specifically, to limit down time to less than 24 hours if possible.

BIOREACTOR MEDIA BED HEIGHT

Excess bioreactor media and biological growth must be kept out of the bioreactor distribution and flow guide system to minimize the possibility of plugging. In a properly operating system, the bed height will increase (i.e. expand) as biological growth takes place. The FBR is equipped with two (2) biomass separation devices and one (1) in-bed media cleaning system. These are installed to help remove biological solids from the media and therefore limit bed expansion. If it is necessary to add or remove media from the bioreactor, the addition and removal procedures described in Section 3.1.4 must be followed explicitly.

BIOREACTOR TEMPERATURE

The biological perchlorate destruction process is temperature sensitive. A reactor temperature below 10°C may negatively affect the microbes and reactor performance temporarily. This effect is not permanent; returning to more moderate temperatures will restore performance. If the reactor temperature increases beyond 38°C for any reason (e.g. due to a severe pump malfunction or operation for an extended period of time in recycle on extremely hot days), steps should be taken to immediately lower the temperature. A long re-acclimation period may result if the temperature remains above 38°C for more than two hours. The temperature is alarmed. If running in recycle, the on/off time should be managed in order to keep temperature from rising above 38 C.

3.1.2 General Startup

Review individual component manufacturer's documentation for additional specifications. Some general guidelines are listed below and should be performed prior to media addition:

1. Stroke all valves prior to flooding system to verify operation.
2. Lubricate and oil all rotating components per manufacturers' recommendations.
3. Energize system. Close disconnect switches. Verify 3-phase motor rotation by momentarily "bumping" the motors.

4. Review Operator Interface Screens at the Control Panel. Confirm communication and correct operation with control system.
5. Verify instrument calibrations.
6. Refer to overall plant startup procedures for the order in which all equipment should be started.
7. Fill reactor vessel and piping with clean water. Bleed all air pockets from system.
8. Check for leaks in tanks, pipes, and fittings. Tighten loose connections and repair all leaks before media loading.

3.1.3 Carbon Media Loading

After completing the general startup preparation guidelines, the FBR vessel should be ready for loading the granular activated carbon (GAC) that will serve as the support matrix for the bacteria. The GAC will be loaded from 500-kilogram super sacks. Care must be taken to minimize/avoid spilling the GAC into the collection and effluent piping systems. The steps for adding GAC to the FBR are as follows:

Follow the steps below for adding GAC to the individual FBR:

1. Empty the water (assumed to be clean water from hydro-testing) within the FBR to an approved drain; however, see Item #4 below to determine how much water should be emptied.
2. Temporarily cover the top of the collection and effluent system openings and the perforations in the collection header pipes. Use plastic sheet attached with duct tape to cover the openings.
3. Isolate all tank valves to the FBR.
4. The FBR should be one-third or one-half filled with groundwater.
5. One by one, hoist the super sacks above the top of the vessel. A worker located on the catwalk above the FBR will open the bags and slowly add the carbon to the reactor. As carbon is added, fluid levels within the reactor should increase. Add additional water as needed to ensure the GAC is covered. The GAC will require 24 hours to completely saturate and settle.
6. Approximately 1,040 cubic feet of carbon should be loaded into the FBR to the settled bed height of 10'-4". This is approximately twenty-eight (28) 500-kilogram super sacks of carbon. Initially, load only 27 super sacks (28,600 pounds) into the reactor. As the carbon is being loaded, the settled bed height in the FBR should be monitored by dropping a weighted probe down through the liquid at the top of the reactor until the probe reaches the top of the settled bed. If necessary, additional carbon can be loaded later.
7. Care must be taken to load or distribute the GAC evenly across the FBR, or uneven fluidization may occur when the fluidization pumps are turned on (i.e., only the shortest portion of the uneven bed will fluidize). It may be necessary to "bump" the fluidization pumps periodically to re-distribute the GAC in the FBR.
8. Remove temporary covers and plugs from the collection box and pipe.

3.1.4 Wash Media and Establish Fluidization Loading

It is important to wash out the media fines prior to putting the FBR into operation. Fill the fluid bed reactor with clean water up to the effluent collection pipe. Close V-401 to the Aeration Tank. Place a ¾" hose in the reactor and continue to add water, allowing the water to exit the reactor through the biomass separators to the clarifier. Establish media fluidization to the FBR in recycle operating mode. Open the valves around the fluidization pump P-301A. Make sure that FBR is filled with water up to the effluent recycle nozzle; otherwise, loss of FBR fluidization pump prime and pump damage may result. Review the Valve Position Chart in Appendix G. Start the fluidization pump at OIT on the FBR system screen. Set the initial fluidization flow at 700 gpm using FI-301 and increase the fluidization flow in increments of 100 gpm up to approximately 1,340 gpm. The fluidization recycle will cause water to discharge from the reactor to the aeration tank and onto the Trimite where media fines will be removed. These media fines will be backflushed from the filter and collected in the clarifier tank. Monitor the recycle for fines. Continue washing out fines until a clear visual line of sight can be made through a 6" deep sample at the top of the reactor. Once the water is clear, remove the fines from the clarifier by letting them settle into the cone and discharging them to the approved drain for solids discharge.

After the fines are removed, allow the bed to settle for at least 1 hour and record the settled bed height using a weighted probe. The settled bed height should be 10'-4" ± 2". Adjust bed height by adding or removing media as necessary. When adding media, pre-wetted media should be used. Add media as described in Section 3.4.3. If the media level is satisfactory reopen the inlet valve, V-401 to the Aeration Tank.

Establish the fluidization loading on the FBR bed. Start the fluidization pump at a recycle flow of 1,340 gpm. Next, monitor bed height. Record the bed height, FBR fluidization flow, and water temperature. Establish the **"normal system fluidization flow"** (NSFF) for the FBR. This is the fluidization flow that results in a clean expanded bed height of 13'-3" to 13'-8" for the FBR and (or 1.28 times the clean settled bed heights) when operating at the normal treatment temperature. Increased water temperature requires a higher flow to achieve a given level of media fluidization. The FBR fluidization flow rate should always be maintained at the established **"normal system fluidization flow."** It is recommended that a mark be placed to indicate the fluidization flow control valve position necessary to achieve this rate for each FBR.

Once the bed is fluidized, the pH of the reactor will likely be greater than 9.0, and will therefore require adjustment. Obtain a media sample and water sample from the FBR vessel and perform titration experiments to determine the required equivalents of sulfuric acid needed to adjust the pH to 7.0. Use a total GAC volume of 1,040 cubic feet and a total liquid volume of 18,650 gallons. Add 93% sulfuric acid through the electron donor pump P-702 until the required amount of acid has been added. Break the 3/8" plastic feed lines prior to the pump and insert the lines into a 55-gallon drum of the acid. After adding the acid, insert the feed lines into water to flush the line of acid for at least 6 hours prior to re-installing the lines. Monitor the pH and run the FBR in recycle for at least one hour to thoroughly mix the acid.

3.1.5 Process Feed Startup Plan

The following items are assumed in place prior to initiating startup:

a. The GAC Carbon System and Backwash tank(by Battelle), Feed Tank, FBR vessel, aeration vessel, Trimite media filter, and the effluent tank with all associated piping are assembled and full of clean water.
b. The FBR is full of media and water.
c. The flow through system, including the filter and GAC, has been fully tested mechanically and has been accepted by the client for startup.

3.1.5.1 General Information

<u>NOTE</u>: It is assumed that the acetic acid addition and nutrient addition systems are set up, primed, and functioning properly.

During this time, microbial growth should be monitored via feed and effluent groundwater quality testing, substrate utilization, and field analytical testing. Adjustments should be made to the initial settings of the biomass separation devices as needed. Monitor the FBR as per Table 1 and add acetic acid and nutrients to the vessels.

3.1.5.2 Inoculation

1. With the FBR running in recycle (fluidization pump running) at the normal system fluidization flow rate, open the manual valves for the system feed from the feed tank, T-201, and start the feed pump at the control screen. Set the system to run at 250 gpm.
2. The chemical feed systems should also be running and adding chemicals to the feed water.
3. Run the system with feed for at least 75 minutes to fill the reactor completely with feed water. Shut down system feed and continue to run the FBR in 100% recycle. Review the Valve Position Chart in Appendix G.
4. The recommended initial dosage of nutrients is 3.0 gallons of the 39% urea/di-ammonium phosphate mix (from Nutrient Tank T-702). The recommended initial dosage of acetic acid is 45 gallons (from Acetic Acid Tank T-702). This is equal to a one day requirement of nutrient and electron donor.

Perform the following steps to seed the FBR vessel.

1. Shut off the system feed. The system should be operating in 100% recycle mode at the NSFF.
2. Pump the seed (microorganisms and nutrients) into the top of the reactor vessel. The recommended microbial seed is 10 gallons of concentrated biological solids derived from an established FBR system.
3. Allow the system to run in 100% recycle mode for 24 to 48 hours. This will give the microbes a chance to adhere to the media.

3.1.6 Initial Feed

With the feed pump off and the FBR fluidization pump running, the water will recycle. Monitor for the water in the FBR until the nitrate and the perchlorate is almost fully degraded. This is expected to occur within one day.
NOTE: It is assumed that the electron-donor substrate, pH control, nutrient addition systems are set up, primed, and functioning properly.

Set the feed flow rate to the minimum design feed flow rate or 40 gpm, whichever is lower. This flow rate should be maintained for a two-day period to allow the microbes to adjust to the feed. After the two day period the feed can be increased in 10% intervals.

Next, set the following preliminary settings of the biomass separation devices:

AIR FLOW RATE: 30 SCFH;
ELEVATION OF Center Pipe: Set the center pipe slot at the normal water level.

During this time, microbial growth should be monitored via feed and effluent groundwater quality testing, substrate utilization, and field analytical tests. Make adjustments to the initial settings of the biomass separation devices as needed.

Monitor the FBR as per Table 1 and add acetic acid and nutrients manually as needed to maintain residual ammonia-N, phosphate-P and acetic acid (as measured by soluble TOC) as per Table 1.

3.1.7 Startup Equipment, Test Kits, and Chemicals

Table 1 is the recommended monitoring program for the FBR. A number of on-site analyses will be required using simple field test kits. Less routine analyses of alkalinity (EPA 310.1), total hardness (EPA 130.2), total dissolved solids (TDS) (EPA 160.1), and cations (EPA 300.0) will also be periodically required (once a month or after changing the feed water composition). These less frequent analyses should be performed by a certified laboratory. The use of Hach methods requiring a spectrophotometer is recommended for the on-site analyses rather than the use of simple visual field test kits. The spectrophotometer methods produce much more reliable and quantitative measurements than simple visual "color wheel" test kits. In addition, once the spectrophotometer (and heater block COD reactor for digestions) are purchased, it is relatively inexpensive and simple to purchase reagents for other analyses if they are required in the future.

Hach Equipment and Reagents

Below is a list of recommended equipment and reagents which can be purchased directly from Hach (Loveland, CO) in order to perform the recommended analyses. Additional reagents can be purchased from Hach as needed. In addition to the equipment listed

below, a few 250-ml beakers, 5-ml and 10-ml transfer pipets, 100-ml graduated cylinders, and disposable 0.45 μm filters and syringes etc. will also be required.

Equipment

Pocket Thermometer
Cat. No. 26763-00 (2003 Catalog, p. 10-66)

ORP Pocket Pal™ Tester
Cat. No. 27273-00 (2003 Catalog, p. 4-29)

Lights Solution Ampules - 20 Count (for checking ORP electrode response)
Cat No. 26125-20 (2003 Catalog, p. 11-26)

DR/2500 Spectrophotometer
Cat. No. 59000-00 (2003 Catalog, p. 3-11)

COD Reactor
Cat. No. 45600-00 (2003 Catalog, p. 1-20)

Laboratory Bench Safety Shield
Cat No. 50030-00 (2003 Catalog, p. 1-20)

Test Tube Rack (for cooling)
Cat. No. 18641-00 (2003 Catalog, p. 1-20)

Thermometer, dial, 0 to 200 °C
Cat. No. 45655-00 (2003 Catalog, p. 1-20)

SensION156 Portable pH/Dissolved Oxygen Meter with Platinum (or Conventional) pH and DO Probes
Cat. Nos. 54650-12 or 54650-13 (2003 Catalog, p. 4-15)

Reagents

Parameter	Analytical Method	DR/2500 2003 Cat. No. and Page #	Range	Approximate Price
Ammonia-N	Hach Method 8038 Colorimetric (Nessler) *	24582-00 p. 3-6	0 – 2.500 mg/l	$36.70 per 100 analyses
Chloride	Hach Method (Mercuric Thiocyanate)	23198-00 p. 3-4	0 – 25.0 mg/l	$36.85 per 100 analyses
Nitrate-N	Hach Method (Cadmium Reduction)	21061-69 p. 3-6	0 – 5.0 mg/l	$25.45 per 100 analyses
Nitrite-N	Hach Method 8507 (Diazotization) *	21071-69 p. 3-6	0 – 0.300 mg/l	$22.55 per 100 analyses

Ortho-phosphate	Hach Method 8048 (Ascorbic Acid) *	21060-69 p. 3-6	0 – 2.500 mg/L	$20.00 per 100 analyses
Sulfate	Hach Method 8051 (SulfaVer® 4) *	12065-99 p. 3-7	0 – 70.0 mg/l	$20.20 per 100 analyses
Sulfide	Hach Method 8131 (Methylene Blue) *	22445-00 p. 3-7	0 – 800 ug/l	$42.90 per 100 analyses
Total Kjeldahl Nitrogen (TKN)	Hach Method (Nessler)	24953-00 p. 3-6	0 – 150.0 mg/l	$88.65 per 100 analyses
Total Organic Carbon (TOC)	Hach Method (Digestion, Persulfate, Sulfuric Acid)	27603-45 p. 11-39 28159-45 p. 11-39	0.3 – 20.0 mg/l 15 – 150 mg/l	$260.05 per 50 analyses $260.05 per 50 analyses

* USEPA-Accepted or USEPA-Approved HACH Methods Used for Wastewater Reporting

Cole-Parmer Equipment and Reagents

Below is a recommended perchlorate probe, sulfide probe, and meter which can be purchased directly from Cole Parmer (Vernon Hills, IL).

Oakton® Acorn™ Ion 5 Meter
Cat. No. A-35613-21 (2003/04 Catalog, p. 1179)

Perchlorate Probe
Cat. No. A-27504-24 (2003/04 Catalog, p. 1178)

Perchlorate Standards and Fill Solution Kit
Cat. No. A-27502-85 (2003/04 Catalog, p. 1179)

Perchlorate Ion Strength Adjustors/Standard Kit
Cat. No. A-27503-60 (2003/04 Catalog, p. 1179)

Silver/Sulfide Probe
Cat. No. 27504-28 (2003/04 Catalog, p. 1178)

Silver/Sulfide Standards and Fill Solution Kit
Cat. No. A-27502-91 (2003/04 Catalog, p. 1179)

Silver/Sulfide Ion Strength Adjustors/Standard Kit
Cat. No. A-27503-51 (2003/04 Catalog, p. 1179)

Chemicals

Below are the recommended chemicals and quantities required for FBR startup. The anticipated usage of chemicals will be dictated by the perchlorate loading to the FBR.

1,000 gallons of acetic acid (50% volume/volume)

300 gallons of 39% liquid urea/di-ammonium phosphate nutrient mixture

1 gallon of 85% phosphoric acid

(1) 55-gallon drums of 93% sulfuric acid; for GAC neutralization

Two (2) drums of polymer for clarifier thickening and filter(TBD)

Two (2) drums of coagulant for clarifier and filter(TBD)

50 lbs of sodium nitrate (granular)

3.2 FBR OPERATION

3.2.1 FBR Operating Modes

The FBR has four distinct operating modes which are indicated at the Operator Interface Terminal.

3.2.1.1 Shutdown Modes

There are two shutdown modes, a FEED SHUTDOWN and FBR SYSTEM SHUTDOWN. When an FBR is in the FBR SYSTEM SHUTDOWN mode, both the feed and recycle are off, but power is available. The mode should only be used if a long-term shutdown is required such as maintenance on reactor internal assemblies. The FEED SHUTDOWN mode occurs when an applicable alarm condition causes a feed shutdown and closes the feed control valve. The FBR SYSTEM SHUTDOWN mode occurs when an alarm condition stops both the feed and recycle. Various alarm conditions such as high or low pH, low nutrient flow, or low electron donor flow will trigger a FEED SHUTDOWN. A table listing the alarm default set points which cause a feed shutdown are listed in the Process Controls and Assembly Specification in Appendix F. The operator must clear the alarm causing the feed shutdown condition before feed can be restarted to the FBR.

At the start of a FEED SHUTDOWN with the wastewater feed discontinued, biological activity in the reactor will continue for some time. Therefore, the pH adjust system should continue to operate. The media will remain fluidized in the reactor since the fluidization pump will remain operational. If the feed shutdown is between 48 hrs and seven days, in order to keep the biomass in the system viable, it will be advantageous to add granular sodium nitrate to the system. Shaw Environmental personnel should be consulted prior to any chemical addition to the system. A feed shutdown of 48 hours or less can be followed by an immediate restart of the feed to the previous flow. If a feed shutdown lasts between 48 hours and 7 days, the operator should perform a gradual restart of the feed with 10% increases in the feed rate per day. If a feed shutdown lasts longer than 7 days, the reactor will most likely require inoculation. However, if inoculation is not possible, the system could be restarted with the understanding that the effluent should be closely monitored and won't meet discharge requirements until a perchlorate-degrading microbial population can be re-established.

A FBR SYSTEM SHUTDOWN is when the feed and recycle are off. This includes automatic shutting-off of the following equipment: (1) the fluidization pump, (2) the electron donor substrate pump, and (3) the nutrient pump. An extended system shutdown (greater than 48 hours) could cause the media to compact at the bottom of the reactor clogging the nozzles, cause channeling in the bed, and bed loss during restart. The cause of an unexpected system shutdown must be identified quickly and remedied to prevent degradation in system performance.

If a FBR SYSTEM SHUTDOWN is desired due to site specific conditions, the fluidization pump must be started every 48 hours to fluidize the reactor bed for 1 hour. Additionally, after 7 days, one reactor volume of feed should be passed through the reactor to wash out the biomass. The one reactor volume throughput should be repeated monthly during an extended system shutdown. During the 1-hour fluidization, the water level in the reactor should be monitored, fluidization flow recorded, and an expanded bed height measurement should be taken. The expanded bed height should be equal to or greater than the clean expanded bed height. If not, we suggest the operator contact Shaw E&I to assist in troubleshooting the bed loss or compaction.

If an FBR SYSTEM SHUTDOWN (whether planned or unexpected) is less than 48 hours, the operator should gradually restart the feed starting at 1/2 the last feed flow for 1 day and returning feed flow to the desired setting the following day. If the system shutdown lasts between 48 hours and 7 days, the operator should perform a gradual restart of the feed with 10% increases daily in the feed rate. If a system shutdown lasts longer than 7 days, the reactor will most likely require inoculation. However, if inoculation is not possible, the system could be restarted with the understanding that the effluent should be closely monitored and won't meet discharge requirements until a perchlorate-degrading microbial population can be re-established.

3.2.1.2 Feed Stopped and Run Modes

At startup, the operator shall change the mode from FBR System Shutdown mode to FEED STOPPED mode by starting the fluidization pump. Prior to entering the RUN mode, the operator should verify all manual valve positions in accordance with the Valve Position Chart for the RUN mode. To enter the RUN mode the operator must place the chemical feed pump in AUTO at the OIT, start the influent filter pump, start the air blower B-401, start the FBR feed pump P-201, start the Well Pumps, start the Trimite filter(see filter startup instructions), place the Backwash Submersible pump in AUTO, and start the reinjection pump P-601. The operator must select one of two feed flow modes for the FBR at the OIT, automatic level control of the Feed tank or manual feed flow control. Selection of the feed flow mode will depend operating requirements of the overall treatment system.

3.2.2 Operator Interface Terminal

The Operator Interface Terminal (OIT) is located on the main control panel. The OIT screens provide the operator the ability to control and monitor the water treatment system, and the screens are designed for intuitive operation. The screens are shown in Appendix C. The main treatment system screen shows the Operating Mode, the ON/OFF

status of all major components, and extraction and reinjection well levels. From the main screen the operator can enter eight separate control screens to control the treatment system and associated setpoint screens for controlling flows, levels, and alarms. The eight control screens are as follows:

1. Flow Totals Screen – Lists the totalized flow for the extraction wells, reinjection wells, and reinjection pump flow transmitters.
2. Extraction Well Screen– The operator can start or stop the extraction well pumps using the Hand, Off, Auto(H/O/A) setting. The screen also displays well status, well level, and line flow. The operator can access a setpoint screen to adjust level and flow control settings.
3. Carbon/Sump System Screen – The operator can start in AUTO the FBR Feed pump, GAC Backwash return pump, and the Backwash Holding Sump Pump. Set the LGAC Flow Control Valve, FCV-201, to AUTO. The operator shall access the setpoint screen for level and feed flow control settings.
4. FBR System Screen – The operator can start one of two fluidization pumps and monitor pump pressure switches, pH, and FV-301 status. Also, AUTO/OFF control for the Nutrient and Electron Donor pumps can be performed from this screen. The setpoint screen has the pH low and high alarms and proportionality constant for nutrient, electron donor, and filter polymer feed.
5. Aeration Tank and Aeration Blower and Trimite Filter Pump screen – In normal system operation the operator can start the Air Blower and place the Filter influent control valve in AUTO. Monitor the Aeration tank level and level control valve status, and trimite filter status. The setpoint screen has level settings and alarms for the aeration tank and flush setting for the Trimite filter.
6. Chemical Feed Screen for Filter and Clarifier - The operator can set the coagulant and polymer feed pumps in AUTO.
7. Reinjection Wells - The operator can control the water level and flow to the reinjection wells. The setpoint screen for level and flow alarm settings with typical values listed.
8. Alarm Screen – A history of alarms with the date, time, and name of the alarm. The operator can silence the alarm from this screen.

3.2.3 Bed Height Control System

In the FBR vessel carbon bed expansion is caused by biomass growth and may be controlled by the Biomass Separation Device and/or the In-bed Cleaning System. The bed height control system limits media carryover. Measurement of bed height, experience, and media samples will dictate the frequency of operation and location of bed height control. The operator will measure bed height on a routine basis in all the reactors using a probe from the top catwalk of the reactor.

3.2.3.1 Biomass Separator

The purpose of the biomass separator is to remove excess biomass accumulation on media located at the top of the fluidized bed in the FBR. The FBR is equipped with two

biomass separation devices. It is recommended that the operator review the Biomass Separator Assembly Drawing, Shaw Drawing No. M-305 in Appendix E.

The biomass separators may be operated on a continuous or intermittent basis, as dictated by the system operating conditions. Normally, they will be operated continuously. The separators lift media from the top of the fluidized media bed at 17' 3" using a 2" diameter air lift tube (pipe). Media with attached biomass and water is directed through the lift tubes into the mixing chamber located at the water surface. Both lifting and mixing are controlled by airflow to the biomass separator. The mixing chamber consists of the 2" air lift pipe with 3" long slot openings inside a 4" pipe section.

The carbon and biomass are separated in the mixing chamber. The media and biomass fall in the 4" pipe into an outer 10" diameter pipe. At the water level, the 10" pipe has (8) slots which allow water and biomass to flow into an outer 12" diameter pipe which is sealed at the bottom except for a drain fitting which is connected by hose to a nozzle connection on the side of the reactor.

The following parameters are operator-adjustable:

1. Airflow rate 0 to 100 standard cubic feet per hour (SCFH). The airflow will determine the media lift rate and the degree of mixing imparted. **A normal setting is 40 SCFH**. To control bed height more effectively, increase air lift flow while closely monitoring the effluent biomass.
2. Separator elevation is adjustable using the nuts and threaded rod which hold the biomass separator in place. At startup the biomass separator elevation should be set so that the bottom of the 1/16" slots in the 10" pipe are 2" below the water level during normal operating conditions. Raising the 10" pipe in the separator will reduce the biomass overflow flow rate and increases the retention time of media particles in the separator, thus increasing the mixing intensity while decreasing flow.

The optimum adjustment of the aforementioned parameters will yield effective biomass removal. If the bed height exceeds the 17' 3" expanded bed elevation in the reactor, the biomass separation devices should be inspected and if nothing is found to be wrong, the airflow should be increased and/or the elevation adjusted. If the bed expansion cannot be controlled with the biomass separation devices alone, then the in-bed cleaning system should be put into service.

3.2.3.2 In-Bed Cleaning System

The in-bed cleaning system is a bed height control device that is intended to agitate and mix media at lower levels in the reactor and shear biomass from the media. Service water provides the energy to an eductor, which circulates and agitates the media. The agitation of the media separates the biomass from the media. Use of the in-bed cleaning system is accomplished by an operator manually opening the service water isolation valve and adjusting a globe valve to produce sufficient mixing.

The in-bed device should be fed with a pressure source of clean water at 15-40 psi for a period of 1 hour. A globe valve located on top of the FBR controls the flow of water to

the eductor. The more the valve is open the greater the mixing by the eductor. Repeat the 1-hour cleaning procedure as necessary after measuring the bed height with a probe or media-sampling device. When the expanded bed elevation falls below the design value, use of the In-Bed Cleaning system can be discontinued.

3.3 FBR MONITORING

The operation of the FBR system involves monitoring mechanical, biological, and chemical parameters and maintaining carbon bed height.

3.3.1 System Monitoring

To gauge the operational and process integrity of the FBR while in operation, it is necessary to record operational data regularly. In this way, the operator should be aware of any trend changes in system operation that may be taking place, and should have early warnings of problems that may be starting to occur. With such early warnings in hand, corrective actions may be taken to prevent minor developing problems from becoming major problems that require lengthy system shutdowns. During the normal operation of the FBR systems, these procedures should be followed:

1. Perform the required monitoring at the designated frequencies.

2. Perform routine maintenance procedures.

A copy of the Monitoring Logsheet is found in Appendix B. The logsheet is included on a Microsoft EXCEL® spreadsheet file on a computer disc provided with the O&M Manual. The logsheet shows the typical range for all critical parameters. A number of simple tests of the feed and effluent water using Hach test kits are required in order to monitor system operation. These test requirements are outlined in Table 1, along with the recommended outside laboratory testing and frequency.

3.3.2 Nutrient and Electron Donor Requirements

The necessary electron donor (i.e., acetic acid) and nutrient (i.e., 39% urea/di-ammonium phosphate mix) dosages are adjusted automatically by the PLC based on a proportionality constant for changing groundwater feed flow rates. The operator adjustable proportionality constant (0-2.00) will be set at the OIT at startup. However, if the groundwater feed composition [i.e., the concentrations of dissolved oxygen (DO), nitrate-nitrogen (NO_3^--N), chlorate (ClO_3^-), and perchlorate (ClO_4^-)] conditions change, the pump stroke length at the pump or the proportionality constant at the OIT should be adjusted to provide the required flows.

A guide to help determine the nutrient solution (i.e., 39% diammonium phosphate) and electron donor (i.e., 50% v/v acetic acid) requirements can be found in Appendix H. The actual spreadsheet is available in a Microsoft EXCEL® spreadsheet file. Using the spreadsheet, the necessary electron donor (i.e., 50% v/v acetic acid) and nutrient (i.e., 39% diammonium phosphate) dosages can be calculated for various feed flow rate and

composition [i.e., the concentrations of dissolved oxygen (DO), nitrate-N, and perchlorate] conditions. The operator inserts the feed DO concentration, feed nitrate-N concentration, feed perchlorate concentration, and feed flow into the spreadsheet along with the excess electron donor desired. The operator should use maximum anticipated input parameters in the spreadsheet calculations. If the values used in the calculations change by greater than 10%, insert the revised input parameters. From the input parameters, the volumetric flow requirements of electron donor and nutrient solution are provided. The settings of the nutrient (P-701) and electron donor (P-702) pumps should then be adjusted to provide the required flows. Verify actual flows using the calibration columns. **The concentrations of the target parameters (i.e., nitrate, chlorate, and perchlorate) in FBR Effluent, as well as the residual ammonia-N, TKN, and ortho-phosphate in the effluents, will dictate the nutrient and acetic acid dosages.**

3.3.3 Determining Settled Bed Height

Occasionally, it is necessary to check the amount of media in the bioreactors. This may be done by measuring the height of the settled media bed. Because measuring the settled bed height involves a system shutdown procedure and restarting, it should only be done if a question arises about the amount of media in the bioreactors or the degree of fluidization being achieved.

Perform the measuring procedure as carefully and quickly as possible to minimize damage to the biological growth that is present. Perform the procedure as follows:

1. Perform a System Shutdown that will stop fluidization.
2. Allow the bioreactor media to settle for approximately 30 minutes.
3. Measure the distance (in inches) down from the top of the reactor vessel to the top of the settled bed using the portable bed height indicator (weighted probe at the end of a rope). The settled bed height should be equal to or greater than the initial settled bed height at startup.
4. Immediately restart the bioreactor system after completion of measurement.

3.3.4 Media Addition and Removal

The following procedures are to be used when adding or removing media from the bioreactors.

3.3.4.1 Media Addition

If it is determined that carbon addition is necessary, follow the steps below:

1. Perform a FBR System Shutdown that will stop fluidization.
2. Measure the settled bed height. Determine how much media is required.
3. Add pre-wetted (pre-soaked in water for at least 24 hours) carbon through the top of the reactor vessel.
4. Restart the system.

3.3.4.2 Media Removal

If there is a need to remove carbon, follow the steps below:

1. Stop the feed pump, P 201. Place reactor system in the 100 % recycle mode.
2. Use a siphon hose or ejector to remove excess media.
3. Transfer and store the media in a holding tank on site. Check integrity of tank to ensure no spillage of media. Ensure tank is cleaned of any contaminants prior to usage.
4. Ensure supply of clean water to replenish any water lost from the reactor during the transfer process so as not to run dry the fluidization pumps.

Table 1. Monitoring Program for Fluidized Bed Reactor System
JPL Perchlorate Treatment Plant

Parameter	Typical Measurement Location	Method	Frequency (Startup)	Frequency (Normal Operation)	Sample Location [2]	Reason for Monitoring Parameter
Temperature	Field	Thermometer	Daily (5x per week)	2x per week	FBR Feed FBR Effluent	Used to monitor system temperature.
Dissolved Oxygen (DO)	Field	Probe	Daily (5x per week)	1x per week	FBR Feed	Used to determine acetic acid dosage.
Ammonia-N	On-site Laboratory	Hach Method 8038 (Nessler) [1]	3x per week	2x per week	FBR Effluent	Used to determine if adequate nutrients are available.
Total Kjeldahl Nitrogen (TKN)	On-site Laboratory	Hach Method (Nessler)	2x per week	1x per week	FBR Effluent	Used to determine if adequate nutrients are available. Measurement greater than 1 mg/L is usually good, taking care not to exceed effluent limitations.
Ortho-phosphate (reactive)	On-site Laboratory	Hach Method 8048 (Ascorbic Acid) [1]	3x per week	2x per week	FBR Effluent	Used to determine if adequate nutrients are available. Measurement greater than 1 mg/L is usually good, taking care not to exceed effluent limitations.
Nitrate-N	On-site Laboratory	Hach Method (Cadmium Reduction)	3x per week	2x per week	FBR Feed	Used to determine ethanol dosage.
Nitrite-N	On-site Laboratory	Hach Method 8507 (Diazotization) [1]	2x per week	1x per week	FBR Feed	Used to confirm nitrite-N not present; if present at > 2 mg/l, ethanol requirement spreadsheet requires modification.
Nitrate-N	Off-site Laboratory	EPA 300.0	3x per week	As per regulation or 1x per week minimum	FBR Feed FBR Effluent	Influent analyses used to set ethanol dosage.
Perchlorate	Off-site Laboratory	EPA 314.0	3x per week	As per regulation or 1x per week minimum	FBR Feed FBR Effluent	Influent analyses used to set ethanol dosage. Objective of FBR operation is to remove perchlorate to < 4 ug/l.
Total Organic Carbon (TOC)	On-site Laboratory	Hach Method (Digestion, Persulfate, Sulfuric Acid)	2x per week	2x per month	FBR Effluent (filtered samples – 0.45 um filter)	Used to confirm reactor operation – residual acetic acid. Slight residual filtered TOC expected from "old" cell debris.
Alkalinity	Off-site Laboratory	EPA 310.1	Quarterly	Quarterly	FBR Feed	Used to determine if water is within design specifications.
Total Hardness	Off-site Laboratory	EPA 130.2	Quarterly	Quarterly	FBR Feed FBR Effluent	Used to determine potential of water to scale.
Total Dissolved Solids (TDS)	Off-site Laboratory	EPA 160.1	Quarterly	Quarterly	FBR Feed	Used to determine if water is within design specifications.
Calcium	Off-site Laboratory	EPA 215.1	Quarterly	Quarterly	FBR Feed	Used to determine if water is within design specifications and to support hardness analyses.
Magnesium	Off-site Laboratory	EPA 242.1	Quarterly	Quarterly	FBR Feed	Used to determine if water is within design specifications and to support hardness analyses.

Parameter	Typical Measurement Location	Method	Frequency (Startup)	Frequency (Normal Operation)	Sample Location	Reason for Monitoring Parameter
Sulfate	Off-site Laboratory	EPA 300.0	Quarterly	Quarterly	FBR Feed	Used to determine if water is within design specifications.
Microscopic Analysis (Media)	Off-site Laboratory	Shaw E&I Laboratory	1x per month	2x per year	FBR GAC	Used to determine health of biomass.
FBR Bed Height	Field	Portable Sounding Device	Daily (5x per week)	2x per week	FBR Vessels	Used to determine FBR bed height.
System Feed Flow	Field	Feed Flow Indicator	Daily (5x per week)	2x per week	FBR Skids	Used to determine load on reactor.
pH - Fluidization	Field	Probe	3x per week	2x per month	FBR Fluidization	Used to determine if system pH probe is out of calibration.
pH - Fluidization	Field	System pH Analyzer	3x per week	2x per week	FBR Skids	Used to determine operating pH.
Acetic Acid Flow	Field	Calibration Columns	3x per week	2x per week	FBR Skids	Used to determine amount of acetic acid fed to reactor.
Nutrient Flow	Field	Calibration Columns	3x per week	2x per week	FBR Skids	Used to determine amount of inorganic nutrients (N and P) fed to FBR.
Fluidization Flow	Field	FBR Flow Indicators	Daily (5x per week)	2x per week	FBR Skids	Used to determine bed expansion vs. recycle flow.
Pressure Gauges	Field	System Pressure Gauges	Daily (5x per week)	2x per week	FBR Systems	Used to determine normal operating line pressures.

1. USEPA-Accepted or Approved Hach Methods Used for Wastewater Reporting

Caution should be exercised if sampling the FRB Effluents at the top of the FBR; hydrogen sulfide may be present. Appropriate personal protective equipment (PPE) should be used.

APPENDIX A – Bill of Materials

JPL FBR
Pasadena, CA

Bill of Materials

ITEM	QTY	UOM	DESCRIPTION	WHERE USED	MODEL #	VENDOR
3-1	1	assy	**Fluid Bed Reactor Vessel** Reference Shaw DWG#M200 Volume: 18,638 gallons Dimensions: 11.5' dia. X 24' ht w/ two 12" Recycle Collector Pipes, Distribution header, and In-Bed Cleaning Piping Material: 304 SS, API 650 code Open Top, Stiffening Ring, Anchor Chairs, Lifting Lugs Flow Baffles, and two sets of Biomass Separator Support Brackets w/OSHA-CAL OSHA approved top catwalk with side rails, ladder and cage (painted safety yellow) Service: See attached Process Water Characteristic, Spec. no. 100770-PWANLYTCL Shaw to provide SS ID tag Tag: FBR-301		Custom	Yuba City
3-2	1	set	**Lateral Hardware (Add 5% to quantity for excess/losses)** (78) 3/8"-16 Ubolt for 3" pipe, 316SS incl. 2 hex nuts, 2 flat washers, and 2 lock washers per ubolt Ref. Shaw Dwg M-201	FBR Laterals		
3-4	1	set	**Header Vent & Hardware (Add 5% to quantity for excess/losses)** Ref. Shaw Dwg M-201, incl. 1/2" 304 SS tubing, 1" X 1/2" Compression fttg.	FBR Inlet header		
3-6	33,000	lbs	**Carbon, pounds** Reference Shaw Carbon Specification CS-100770-1, REV 0 Service: liquid phase	FBR Vessel Media	Vendor to advise	Carbochem
3-7	1	set	**Set of PVC Lateral Distribution Pipes, sch. 80 w/ Saddles:** Set of laterals per Shaw DWG# M300 including:	FBR Vessel Internals	CUSTOM	BECO
	4	pc	Size 1 Lateral, PVC, gray			
	4	pc	Size 2 Lateral, PVC, gray			
	4	pc	Size 3 Lateral, PVC, gray			
	4	pc	Size 4 Lateral, PVC, gray			
	4	pc	Size 5 Lateral, PVC, gray			
	4	pc	Size 6 Lateral, PVC, gray,			
	4	pc	Size 7 Lateral, PVC, gray			
	6	pc	Size 8 Lateral, PVC, gray			
3-8	1	set	**Set of Flowguides and Saddles:** as per ENVG STD drwg #C-9807 and incl:	FBR Vessel Internals	custom	TNT Plastics
	200	ea	3"x1 ¼" Saddle Tee, PVC (required)			
	200	ea	Flow Guide, 1-1/4"MNPT x 12-1/8" Long, PVC, 0.434" drilled orifice			
	17	ea	Modified Flow Guides, 1-1/4"MNPT x 9-5/8" Long w/ 0.437" ID insert bushing			BECO
3-9	1	ea	**Screen Assembly** Size: OD to fit through 2" Nozzle Screen Mesh Slot Size = 1.0 mm Length: 14" from flange face to end Design Differential Pressure: 50 PSI internal or external Fittings: - 1/8" thick plate sized and drilled to suit 2" 150# ANSI Flange - 1/8" thick cap welded at end Materials: 304 SS screen, balance: 304 SS Normal operating press: 21' H2O Normal operating temperature: 50 to 70 deg. F Service: See attached Process Water Characteristic, Spec. no. 100770-PWANLYTCL	FBR Vessel Internals	Custom	Glentech
3-10	1	set	**Effluent Collection Header Assy and Clamp**			
	1	ea	Header as per Shaw DWG# M303	FBR Vessel	CUSTOM	
3-10.1	2	ea	Flexible Pipe Couplings, 6" pipe size for pipe OD 6.38" x 6.38", rated at 4.2 psi	Eff Collectors	Fernco or DFW p/n 21340	USA Bluebook
2	4	ea	5-3/4" to 7-3/4" Hose Clamp, Worm-Drive 1/2"" wide band, 300 series SS band, 400 series SS hex screw	Eff Collectors	p/n 44645	USA Bluebook
3-15	2	ea	**Fluidization Pumps** Design Point: 1,300 GPM @ 42' TDH Conn.: 8" Inlet x 6" Outlet, 150# RF Flange Closed Impeller, 286 mm diameter	FBR Pump Skid FBR Feed	Sulzer APT31-6 8x6	

Bill of Materials

ITEM	QTY	UOM	DESCRIPTION	WHERE USED	MODEL #	VENDOR
			Suction Pressure = 0-20 ft H2O Mat'l: A890-3A SS, Dynamic Shaft Seal Motor: 20HP, 3Ph, 60 Hz, 460VAC, 1160 rpm, TEFC, Mill & Chem duty Service: See attached Process Water Characteristic, Spec. no. 100770-PWANLYTCL Tag: P-301 A&B			
3-16	1	ea	**Tee Strainer with Bolted cover** conn.: 10" flanged inlet and outlet mat'l: 304 SS body, 316 SS screen Design Flow: 1300 gpm @ 15 psig Horizontal run & branch. Drain at lowest point on blind branch flange. 1" FNPT drain coupling connection. 1/2" FNPT vent coupling conn. on top of tee. Hardware to be SS to include nut, bolt, washers and lock washer for each flange bolt hole Convoluted screen Screen: 1/8" mesh Shop Drawing Required by Shaw for Approval Service: See attached Process Water Characteristic, Spec. no. 100770-PWANLYTCL Tag: S-301	FBR Pump Skid upstream of fluidization pump	Glentech Model 850	
3-17	1	ea	**Multi-point Pressure Switch** process conn.: 1/2" FNPT dual setpoint: 9.75 psig. (decreasing) and 21 psig (increasing) mat'l: 316L SS bellows, 316 SS process connection NEMA 4X housing, two SPDT, 15A, 125/250/480 VAC resistive adj range: 0 to 30 psig w/ internal adjustments and reference dial fixed deadband doubles: 0.1-0.6 psig set point repeatability = +/- 1% of adjusted range proof pressure = 40 psi Options incl: factory set two switches & SS ID tag & wire attachments Pressure connection stem = 6.19" long electrical conn: 3 ea 7/8" knockouts Service: See attached Process Water Characteristic, Spec. no. 100770-PWANLYTCL Tag: PSH/PSL-301	FBR Pump Skid fluidization pump discharge	United Electric H402-S146B-M202 -M446	
3-180	1	ea	**pH Sensor w/ Integral Preamp** Type: Retractable Sensor with 1-1/2" isolation valve pH Range: 0 to 14 Process connection: 1" FNPT Wetted mat'l: tefzel body with titanium tube Automatic temperature compensation: 32 to 185 deg. F Pressure Rating: 0 to 100 psig @ 65 deg. C Normal operating temp: 15 to 20 deg C Normal Operating pressure: 0 - 30 psig Includes integral preamp, 316 SS Ball Valve (1 1/2") Service: See attached Process Water Characteristic, Spec. no. 100770-PWANLYTCL Tag: AE-301	FBR Pump Skid	Rosemount 385+-02-10 Cable 23646-01	
3-181	1	ea	**2-Wire pH Transmitter** Range: 0 - 14 pH units, adjustable span & zero digital local display Accuracy: 0.1% of reading Nominal input power: 12 - 45 VDC Output: (1) isolated 4-20mA into 500 ohms @ 24VDC, linear with pH Housing: NEMA 4X, epoxy-painted aluminum Ambient temperature rating: -22 to 131 deg. F Tag: AIT-301	FBR Pump Skid	Rosemount 1055-01-11-22	
3-190	1	ea	**Pressure Gauge** Range: 0 to 30 psig Stainless steel case, 4" dial 316 stainless wetted parts Liquid Filled: Glyceriin 1/4" MNPT conn (lower) accuracy: +/- 1% of span Service: See attached Process Water Characteristic, Spec. no. 100770-PWANLYTCL Tag: PI-305	FBR Pump Skid Fluidization Pump Inlet	U.S. Gauge	
3-191	1	ea	**Pressure Gauge** Range: 0 to 60 psig Stainless steel case, 4" dial 316 stainless wetted parts Liquid Filled: Glyceriin	FBR Pump Skid Fluidization Pump Outlet	U.S. Gauge	

Bill of Materials

ITEM	QTY	UOM	DESCRIPTION	WHERE USED	MODEL #	VENDOR
			1/4" MNPT conn (lower) accuracy: +/- 1% of span Service: See attached Process Water Characteristic, Spec. no. 100770-PWANLYTCL Tag: PI-304			
3-192	5	EA	**1/4" Ball Valves Tru-Union** Material: PVC Body and ball, teflon seart, EPDM O-ring	FBR Pump Skid	Asahi	
3-193	4	EA	**1/2" Ball Valves Tru-Unioin** Material: PVC Body and ball, teflon seart, EPDM O-ring	FBR Pump Skid	Asahi	
3-194	2	EA	**1/2" Check Valves** Material: PVC	FBR Pump Skid		
3-195	1	EA	**1" Ball Valve** Material: PVC Body and ball, teflon seart, EPDM O-ring	FBR Pump Skid	Asahi	
3-196	1	EA	**6" Butterfly Valve** Connection: 6" ANSI Class 150 flange, lug body Materials: Ductile iton body, 416 SS shaft, 316 SS disc, EPDM seat & packing Bronze bearing Manual Gear operator Inlet Pressure: 10 - 30 psig Discharge Pressure: 0 - 30 psig Flow: 350 gpm	FBR Pump Skid		
3-197	4	EA	**10" Butterfly Valve** Connection: 10" ANSI Class 150 flange, lug body Materials: Ductile iton body, 416 SS shaft, 316 SS disc, EPDM seat & packing Bronze bearing Manual Gear operator Inlet Pressure: 10 - 30 psig Discharge Pressure: 0 - 30 psig Flow: 1300 gpm	FBR Pump Skid		
3-198	2	EA	**8" Butterfly Valve** Connection: 8" ANSI Class 150 flange, lug body Materials: Ductile iton body, 416 SS shaft, 316 SS disc, EPDM seat & packing Bronze bearing Manual Gear operator Inlet Pressure: 10 - 30 psig Discharge Pressure: 0 - 30 psig Flow: 1300 gpm	FBR Pump Skid		
3-199	2	EA	**8" Check Valve** Size: 8" Wafer style, Split Disc 316 SS Body, EPDM seat, 316 SS plates, 316 SS trim Pressure Drop: 0.7 psi at 1300 gpm	FBR Pump Skid		
3-20	1	Assy	**Biomass Separator Control Ass'y** Fabricated in accordance with Shaw Dwg M304 Shaw to provide Items 3-21 to 3-23 for assembly	Carbon FBR	Custom	Absolute
3-21	1	ea	**Pressure Regulator, Relleving** Connection: 1/4" FNPT Inlet/Outlet Adjustment Range: 0-125 psig Pressure gauge: 0-160 psig Material: Zinc body with nitrile seals and diaphragm Max P = 300 psig Includes pressure gauge from 0-160 psig and mounting bracket Service: Instrument Air at 90 psig Tag: (Regulator) PCV-301 Tag: (press. gauge) PI-301	Biomass Separator Control Assy	Wilkerson R16-02-G00 and GRP-95-229 w/ GPA-95-011	MILLER
3-22	2	ea	**Flow indicator w/ needle valve** Range: 10 -100 SCFH Scale size: 4" Wetted Material: Acrylic, brass, stainless steel Pressure and Temperature rating: 100 psig @ 150 F Connections: 1/8" FNPT Service: Instrument Air at 90 psig tag: FI-301, FI-302	Biomass Separator Control Assy	Dwyer VFB-53-BV	Dwyer
3-23	1	ea	**Ball Valves** Size: 1/4" FNPT Material: Bronze body, stem, and trim; alloy 360 ball, TFE seat and seals Service: Instrument Air at 90 psig	Biomass Separator Control Assy	Nibco T-580.001	AIS

JPL FBR
Pasadena, CA

Bill of Materials

ITEM	QTY	UOM	DESCRIPTION	WHERE USED	MODEL #	VENDOR
			Tag: V-327			
	2	ea	**Biomass Separators** Fabricated in accordance with Shaw Dwg M-305 to include the following items: -Biomass Separator Body, Splash Shield, and Air Lift Tube	GAC FBR	Custom	BECO
			Items 3-31 through 3-34 required for Biomass Separator installation			
3-31	2	ea	**2" Medium Pipe Clamp for Air Lift Pipe Support** Material: 18-8 SS	Biomass Separator		Shaw Piping
3-32	6	ea	**1/2"thick Threaded Rod, 9" L, Material: 316 SS**	Biomass Separator Support		Lincoln
3-33	36	ea	**1/2" Nuts, to match threaded rod, Material: 316 SS**	Biomass Separator Support		Lincoln
3-34	18	ea	**1/2" Washers, to match threaded rod, Material: 316 SS**	Biomass Separator Support		Lincoln
3-40	4	ea	**2" Adapter, MNPT x Barb, Polypropylene**	Excess Biomass	Dixon #HB-200	Goodyear
3-42	20	ft	**Hose, 2" I.D. X 2 3/8 O.D., Material: PVC**	Excess Biomass	p/n 5293K42	Lincoln
3-43	2	pk	**2 3/8" Hose clamp, worm drive, 316 SS, 10/pk**	Excess Biomass		McMaster
3-44.1	2	ea	**4" Flange Adapter Assembly, PVC, SCH 80,** ref: Shaw Drwg # M-306	Excess Biomass	Custom	
	2	ea	**2" Gasket, 1/8" th, EPDM, Full Face**	Excess Biomass		Lincoln
3-46	16	ea	**5/8"-11 x 3" Bolt, Hex Head, Full Thread, 316 SS**	Excess Biomass		Lincoln
3-47	32	ea	**5/8" Flat Washer, 316 SS**	Excess Biomass		Lincoln
3-48	16	ea	**5/8" Lock Washer, 316 SS**	Excess Biomass		Lincoln
3-49	16	ea	**5/8"-11 Hex Nut, 316 SS**	Excess Biomass		Lincoln
3-52	500	lf	**1/4" Air Tubing, Black polypropelyne** working pressure = 300 psi (only sold in 500 lengths)	Biomass Separator/ Control Panel Conn. Biomass Hose	Parker p/n PPB-43-0500	Fabco
3-60	1	ea	**Tank Mixing Eductor** Material: Polyproylene Connection: 3/4" NPTM Suction: 84 gpm Motive: 16.8 gpm Pressure: 15 psi Service: See attached Process Water Characteristic, Spec. no. 100770-PWANLYTCL	In-bed cleaning assy	Penberthy 3/4"TME	Miller Energy
	1	ea	**8" Butterfly Valve w/ Pneumatic Actuator** Type: Lug Style Connection: 8"-150# FLG Material: 316 SS stem and disc, epoxy coated ductile iron body with EPDM seat Cv: 3316 at 90° disc position Pressure rating: 175 psig	FBR influent	Bray Series 31 31-124	

Bill of Materials

ITEM	QTY	UOM	DESCRIPTION	WHERE USED	MODEL #	VENDOR
			Max. Operating Pressure: 50 psig Actuator (shipped assembled): Type: Pneumatic, air to open/spring close Connections: 1/4" FNPT Material: anodized aluminum housing Air supply: 65 psi (min) Pressure rating: 120 psi max. Service: See attached Process Water Characteristic, Spec. no. 100770-PWANLYTCL Tag: FV-301		Actuator Bray 91-160-4	
3-66	1	ea	**3 Way Quick Exhaust Solenoid Valve, Normally Closec** Connections: 1/4" FNPT Material: brass body, Buna-N seals & discs Electrical: 110 VAC, single phase, 60 hz, NEMA 4 enclosure Press. Cv: 0.8; Exhaust Cv: 1.2 operating differential pressure: 0 (min) to 200 (max) Pressure rating: 150 psig Ambient Temperature rating: 32 to 125 deg. F Service: Instrument air Tag: FV-301	Pneum. Actuator, Positioner	Asco 8321G2	Ives
3-67	1	ea	**Pitot Tube & Mounting Hardware** Pipe size 8" Sched 80 PVC Flow and pressure: 1300 gpm @ 18 psig Materials: Probe 304 SS Installation Orientation: Vertical Inst. Connection: 3/4" FNPT Valve Connections: 1/8" FNPT includes 1/8" NPT X 1/4" flared adapter Delta P = 31 in w.c. @ 1300 gpm Service: See attached Process Water Characteristic, Spec. no. 100770-PWANLYTCL Tag: FI-301	FBR Vessel Inlet	Dwyer DS-400-8	Dwyer
1	1	ea	**Differential Pressure Indicator** Dial: 4 1/2" round dial Range: 0-50 in w.c. Polysulfone body w/ viton seals Connections: 1/4" Comp. Tube fittings, 316 SS Service: See attached Process Water Characteristic, Spec. no. 100770-PWANLYTCL Tag: FI-301	FBR Vessel Inlet Pitot tube	Midwest 130-PC-00-01	Ecco
3-70	1	ea	**Sludge Level Detector** Hand held material: PVC & Epoxy probe, vinyl jacketed cable, PVC & aluminum gun, adjustable trip point sensitivity control, cable length: 33 ft, includes 30 self adhesive vinyl cable markers, 6 Alkaline Pencells batteries, weatherproof loudspeaker, temperature rating: 0 to 120 deg. F normal operating temp: 50 to 75 deg. F Service: See attached Process Water Characteristic, Spec. no. 100770-PWANLYTCL Tag: LI/LE-301	FBR Vessel	Markland Specialty 10 SLUDGE GUN	GenQ
3-80	1	ea	**Pressure Gauge** Range: 0 to 60 psig Stainless steel case, 4" dial 316 stainless wetted parts Liquid Filled: Glyceriin 1/4" MNPT conn (lower) accuracy: +/- 1% of span Service: See attached Process Water Characteristic, Spec. no. 100770-PWANLYTCL Tag: PI-303	In-Bed Cleaning Eductor	Wika 233.53-E-PBE-NB- UZAZZZ-Z6-000000	Miller Energy
1	1	ea	**Pressure Gauge** Range: 0 to 30 psig Stainless steel case, 4" dial 316 stainless wetted parts Liquid Filled: Glyceriin 1/4" MNPT conn (lower)	FBR Inlet Header	Wika 233.53-E-PBD-NB- UZAZZZ-Z6-000000	Miller Energy

Bill of Materials

ITEM	QTY	UOM	DESCRIPTION	WHERE USED	MODEL #	VENDOR
			accuracy: +/- 1% of span Service: See attached Process Water Characteristic, Spec. no. 100770-PWANLYTCL Tag: PI-302			

Bill of Materials

ITEM	QTY	UOM	DESCRIPTION	WHERE USED	MODEL #	VENDOR
4-1	1	ea	**Aeration Tank** Reference Shaw DWG#M210 Volume: 9300 gallons Dimensions: 9' dia. X 20' ht Material: 304 SS, API 650 code includes 6" suction elbow and still well (Aeration Header provided & installed by USF) Service: See attached Process Water Characteristic, Spec. no. 100770-PWANLYTCL Shaw to provide SS ID tag Tag: T-401	T-401		Yuba City
4-2	1	EA	**Filter Influent Pump** Type: horizontal Centrifugal Design Point: 350 GPM @ 34 ft TDH Max. Press.: 60 ft Conn.: 6" flanged suction, 4" flanged discharge Mat'l: double mechaical seal with TEFC gland arrangement, Viton gaskets 303SS shaft Motor Mfgr: Service: Continuous 230-460 VAC, 3 Ph, 60 Hz, 1800 RPM TEFC, 7.5HP, Horizontal Mounting Full Load Amps = XX, Power Factor = XX, SF = 1.15 Tag: P-401	T-401 Discharge	Sulzer APT21-3	
4-3	1	ea	**Level Switch** process connection: 2" MNPT, conduit connection: 1/2" FNPT," materials: 303 SS Body, 316 SS float, SPDT switch, 1 amps @ 125 VAC, explosion proof & U.L., CSA listed, weather resistant, Pressure rating: 1500 psig, Design Pressure: 45 psi normal operating pressure: 25 psi, Design temperature: 100 deg. F normal operating temp.:100 deg. F, Service: See attached Process Water Characteristic, Spec. no. 100770-PWANLYTCL Tag: LSH-401	T-401	SOR 1510B-G5A-C-W1-ES	Mueller Processing RJM
4-4	1	ea	**Liquid Level Transmitter** Range:0-125 in H20 to 0-750 in H20, calibrated range: 6 to +300 in H2O accuracy: +/- 0.25% Output: 4-20 mA w/ adjustable damping process conn: 2" ANSI Class 150 flange Mat'l: 316 SS mounting flange, extension, drain/vent valve, 316L SS isolating diaphragm, nickel plated CS low-side flange & adapter silicone fill Ambient temp. range: -40 to 400 deg. F Service: See attached Process Water Characteristic, Spec. no. 100770-PWANLYTCL Tag: LIT-401	T-401	Rosemount 1151LT 5EG0X52D s/n: 2313038 04/04	Rosemount
4-5	1	ea	**6" Butterfly Valve, Actuator, I/P Positioner** Type: Lug Style Connection: 6"-150# FLG Material: 316 SS stem and disc, epoxy coated ductile iron body with EPDM seat Cv: 1850 at 90° disc position Pressure rating: 175 psig Max. Operating Pressure: 50 psig Service: See attached Process Water Characteristic, Spec. no. 100770-PWANLYTCL Actuator (shipped assembled):	P-401 Discharge	Bray Series 31-124 Actuator	Flow Control

Bill of Materials

ITEM	QTY	UOM	DESCRIPTION	WHERE USED	MODEL #	VENDOR
			Type: Pneumatic, air to open/spring close Connections: 1/4" FNPT Material: anodized aluminum housing Air supply: 65 psi (min) Pressure rating: 120 psi max.		Bray 93-127-04	
			Positioner: (shipped assembled), Single Acting Input: 4-20 mA dc Position Indicator Enclosure: NEMA 4X, anodized aluminum Temp range:-5 deg. F to 185 deg. F includes (2) pressure gauges: supply air, actuator air Conn: pneum - 1/4" NPT, 1/2" NPT conduit Pressure rating: 120 psi max. Air consumption: 0.32 scfm (@ 80 psig) flow capacity: 18.8 scfm linearity: 0.5% of span Tag No.: LCV-401		Series 67	
4-6	1	EA	**Blower Package** Type: Rotary Positive Displacement Capacity: 20 SCFM @ 10 psig Motor: 3 HP, 1800 RPM, 460 VAC, 60 HZ, 3 phase, TEFC, High Eff. Accessories: - Inlet filter - Inlet and outlet silencers - Pressure indicator - Pressure relief valve set at 15 psig - Temperature indicator, 50- 550 deg F - Discharge check valve - Flexible connection on discharge Blower package shall be completely assembled. Tag: B-401	Aeration Tank	2MP Suterbilt	
4-7	1	EA	**Pressure Switch** Connection: 1/2" FNPT, with cleanout orifice Setpoint: 8 psig (decreasing) Material: 316 SS diaphragm, 316 SS process connection & viton O-ring NEMA 4X housing, SPDT, 1A, 125 VAC gold contacts Adjustable range: 2 to 50 psig Ambient Temp: 20 to 120 deg F Fixed deadband: 0.3 to 3.0 psig Service: See attached Process Water Characteristic, Spec. no. 100770-PWANLYTCL Tag: PSL-401	B-401 Outlet	United Electric	
4-8	1	ea	**Pressure Gauge** Range: 0 to 30 psig Stainless steel case, 4" dial 316 stainless wetted parts Liquid Filled: Glyceriin 1/4" MNPT conn (lower) accuracy: +/- 1% of span Service: See attached Process Water Characteristic, Spec. no. 100770-PWANLYTCL Tag: PI-402	P-401 discharge	US Gauge Solfrunt Century 100 03 A 2 P 01 B	Miller

JPL FBR
Pasadena, CA

Bill of Materials

ITEM	QTY	UOM	DESCRIPTION	WHERE USED	MODEL #	VENDOR
7-1	1	EA	**Nutrient Feed Pump** Flow: 0 - 1 GPH Connections: 3/8" O.D. Tube Max Injection Pressure: 50 psi Output per stroke: 0.25 - 1.27 ml/stroke Stroke Frequency: 1 to 100 spm Manual/External select mode speed adjustment 120 VAC, 22 watts, 1 phase, 60 Hz Input signal: 4 - 20 mA Automatic stroke rate adjustment/digital display Material: PVDF head/fittings, ceramic balls, Fluorofilm liquifram Includes: Injection check valve (3/8" tubing x 1/2" MNPT, 4 function valve Normal operating temp: 50 to 110 deg F Service: liquid nutrient solution Tag: P-701	FBR Pump Skid		LMI
7-2	1	EA	**Electron Donor Pump** Flow: 0 - 8 GPH Connections: 3/8" O.D. Tube Max Injection Pressure: 50 psi Output per stroke: 0.25 - 1.27 ml/stroke Stroke Frequency: 1 to 100 spm Manual/External select mode speed adjustment 120 VAC, 22 watts, 1 phase, 60 Hz Input signal: 4 - 20 mA Automatic stroke rate adjustment/digital display Material: PVC head/fittings, ceramic balls, Fluorofilm liquifram Includes: Injection check valve (3/8" tubing x 1/2" MNPT, 4 function valve Normal operating temp: 50 to 110 deg F Service: 30% sodium benzoate solution Tag: P-702	FBR Pump Skid		LMI
7-3	1	EA	**Filter Coagulant Feed Pump** Flow: 0 - 8 GPH Solenoid Driven Max Injection Pressure: 50 psi Model: LMI pump Manual/External select mode speed adjustment 120 VAC, 22 watts, 1 phase, 60 Hz Input signal: 4 - 20 mA Automatic stroke rate adjustment/digital display Normal operating temp: 50 to 110 deg F Service: Alum, Ferric Chloride or PACL Tag: P-703	Flocculation Chemical Feed Skid		USF
7-4	1	EA	**Filter Polymer Feed System** Model: Stranco Polyblend System Capacity: 0 -2.0 GPH Manual/External select mode speed adjustment 120 VAC, 22 watts, 1 phase, 60 Hz Input signal: 4 - 20 mA Automatic stroke rate adjustment/digital display Normal operating temp: 50 to 110 deg F Service: Polymer Tag: P-704	Flocculation Chemical Feed Skid	PolyBlend PB100-0.4	USF
7-5	1	EA	**Clarifier Coagulant Feed Pump** Flow: 0 - 0.4 GPH Solenoid Driven Max Injection Pressure: 50 psi Model: LMI pump Manual/External select mode speed adjustment 120 VAC, 22 watts, 1 phase, 60 Hz Normal operating temp: 50 to 110 deg F Service: Alum, Ferric Chloride or PACL Tag: P-705	Flocculation Chemical Feed Skid	LMI	USF
7-6	1	EA	**Clarifier Polymer Feed System** Model: Stranco Polyblend System Capacity: 0 - 0.4 GPH	Flocculation Chemical Feed Skid	PolyBlend PB100-0.4	USF

Bill of Materials

ITEM	QTY	UOM	DESCRIPTION	WHERE USED	MODEL #	VENDOR
			Manual/External select mode speed adjustment 120 VAC, 22 watts, 1 phase, 60 Hz Normal operating temp: 50 to 110 deg F Service: Polymer Tag: P-706			
7-7A	1	EA	**Flow Switch** Tag: FSL-701	FBR Pump Skid		LMI
7-7B	1	EA	**Flow Switch** Tag: FSL-702	FBR Pump Skid		LMI
7-8	1	EA	**Calibration Column** Capacity: 250 ml Scale Divisions: 10 ml Connection: 1/2" FNPT Material: PVC Service: Liquid Nutrient Solution	FBR Pump Skid Pump P-701		
7-9	1	EA	**Calibration Column** Capacity: 1000 ml Scale Divisions: 25 ml Connection: 1" FNPT Material: PVC Service: 50% Acetic Acid solution	FBR Pump Skid Pump P-702		
7-10	1	EA	**Calibration Column** Capacity: 250 ml Scale Divisions: 10 ml Connection: 1/2" FNPT Material: PVC Service: Alum, Ferric Chloride or PACL	Flocculation Chemica Feed Skid Pump P-703		
7-11	1	EA	**Calibration Column** Capacity: 250 ml Scale Divisions: 10 ml Connection: 1/2" FNPT Material: PVC Service: Alum, Ferric Chloride or PACL	Flocculation Chemica Feed Skid Pump P-705		
7-20	6	EA	**1/2" Ball Valves - Tru Union** Material: PVC body with EPDM seats Conn: 1/2" FNPT Service: 30% sodium benzoate solution, nutrient, polymer, ferric chloride, alum, PACL	FBR Skid Pumps P-701/702		Asahi
7-21	10	EA	**1/2" Ball Valves - Tru Union** Material: PVC body with EPDM seats Conn: 1/2" FNPT Service: 30% sodium benzoate solution, nutrient, polymer, ferric chloride, alum, PACL	Flocculation Chemical Feed Skid Pumps P-703/704 Pumps P-705/706		Asahi

ITEM	QTY	UOM	DESCRIPTION Bill of Materials	WHERE USED	MODEL #	VENDOR
8-1	1	EA	**Backwash Clarifier Tank** Reference Shaw Drawing M-140 Flow: 25 gpm Size: 12' dia x 9'6" SS with 60 degree conical bottom Material: 304 SS Center Feed, overflow weirs, bottom concentrated solids drawoff Support legs designed for seismic conditions Tag: T-802	Post Filter		Yuba City
8-2	1	EA	**Backwash Submersible Pump** Type: Submersible Capacity: 25 gpm @ 42 FT TDH Material: 304 SS Connection:2" FNPT Motor: 1 1/2 HP, 460 VAC, 60 HZ, 3 PH, 3500 rpm Service: See attached Process Water Characteristic, Spec. no. 100770-PWANLYTCL Tag: P-801	T-801	Goulds Pumps 2DM51F4NA	Pump Shop
8-3	1	EA	**Float Switch** Type: narrow angle (25 deg.), mechanical float Mat'l: ABS plastic Incl.: Pipe mount assembly with poly band, 20' cord Contacts: normally open Switch: SPDT, 10 Amp @ 120/230 VAC, alarm duty Temperature rating: 190 deg F Max. Service: See attached Process Water Characteristic, Spec. no. 100770-PWANLYTCL Tag: LSHH-801	T-801	Conery 2-2900-B3S2C2-20'	Conery
8-4	1	EA	**Flow Indicator with Needle Valve** Range: 0 - 1 SCFH Scale size: 2" Wetted Material: Acrylic, brass, stainless steel Pressure and Temperature Rating: 100 psig @ 150 deg F Connections: 1/8" FNPT Service: Instrument air at 90 psig Tag: FI-802	T-801 Level	Dwyer VFA-1-BV	Dwyer
8-5	1	EA	**2" Knife Gate** Connection: 2" Wafer, 150 # ANSI Material: 304 SS body,EPDM seat with PTFE fiber packing Rotary manual handwheel Service: See attached Process Water Characteristic, Spec. no. 100770-PWANLYTCL Tag: V-804	P-801 discharge	DeZurik KGL,2,W1,S1,C,EPDM,	KenTech/
8-6	1	EA	**Differential Pressure Transmitter** Pressure Range: -250 to 250 in H20 calibrated range: 0 to +250 in H2O accuracy: +/- 0.075% Output: 4-20 mA Power: 10.5 - 55 Vdc Mat'l: SS flange, SS drain/vent, SS flange adapter 316L SS isolating diaphragm, glass filled TFE O-ring, silicone fill, ployurethane covered aluminum housing Burst Pressure: 10,000 PSIG Ambient temp. range: -40 to 185 deg. F Enclosure: NEMA 4X, Weight: 6 lbs. Connection: 1/4" FNPT (High and Low) Service: instrument air Tag: LT-810	Sump level T-801	Emerson/Rosemount 3051CD2A22A1A	Rosemount
8-9	1	EA	**Pressure Gauge** Range: 0 to 30 psig Stainless steel case, 4" dial 316 stainless wetted parts	P-801 Discharge	US Gauge Solfrunt Century 100 03 A 2 P 01 B	Miller Energy

			Liquid Filled: Glyceriin 1/4" MNPT conn (lower) accuracy: +/- 1% of span Service: See attached Process Water Characteristic, Spec. no. 100770-PWANLYTCL Tag: PI-801			
8-10	1	assy	**Clarifier Pipe Header** ref: Shaw Drwg # M-308 mat'l: PVC	T-802 Internals	Custom	BECO
8-11	1	assy	**Clarifier Feed Well Flange** ref: Shaw Drwg # M-308 mat'l: PVC	T-802 Internals	Custom	BECO
8-12	1	assy	**Clarifier Inlet Pipe** ref: Shaw Drwg # M-308 mat'l: PVC, sch. 80	T-802 Internals	Custom	BECO

APPENDIX B – Monitoring Logsheets

MONITORING LOGSHEET JPL NASA Groundwater Treatment Plant

Date	Time	Feed Flow FI-150	Fluidization Flow FI-301	System Feed Pressure PI-305	Fluidization Pump Discharge Pressure PI-304	FBR Fluidization Pressure PI-302	Carbon Bed Height	Nutrient Pump P-701 Proportionality Constant	Measured Nutrient Flow [1]	Electron Donor Substrate Pump Proportionality Constant	Measured Electron Donor Flow [1]	Aeration Blower Pressure PI-401	Filter Inlet Pressure PI-501	Filter Outlet Pressure PI-502	Turbidity AIT-501	Dissolved Oxygen Feed	pH Reactor	Temperature Feed	Temperature Reactor Contents	Filtered Total Organic Carbon Effluent	Nitrate-N Feed	Nitrite-N Feed	Perchlorate Feed	Perchlorate Effluent	Ammonia-N Feed	Ammonia-N Effluent	Ortho-Phosphate Effluent
d/m/y	hh:mm	gpm	gpm	psig	psig	psig	ft	factor	gpd	factor	gpd	psig	psig	psig	NTU	mg/l		Deg. C	Deg. C	mg/l	mg/l	mg/l	mg/l	ug/l	mg/l	mg/l	mg/l
Normal Range		0-250	1300	0-30	10-30	5-15	11'-15'	0-2	0-2	0-2	0-45	0-15	10-30	10-30	0-100	0-3	6.5-7.0	15-25	15-35	0-15	0-3	0-.25	0.5-5	<4	0-2.5	0.2-2	0.2-2

1. Measured using calibration columns

APPENDIX C – Operator Interface Screens

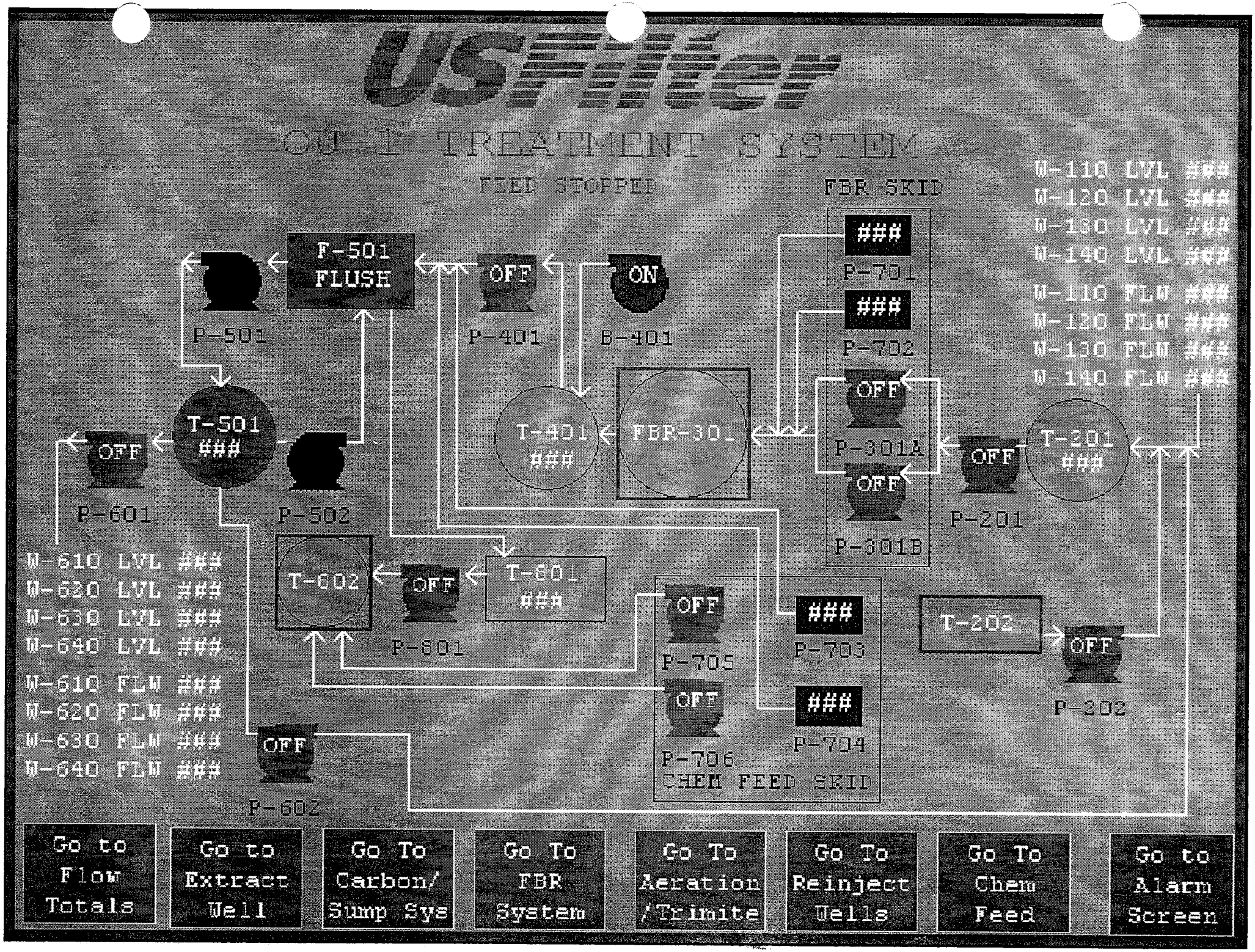
OU-1 TREATMENT SYSTEM
FEED STOPPED
FBR SKID
F-501
FLUSH
OFF
ON
###
P-701
###
P-702
P-501
P-401
B-401
T-501
###
T-401
###
FBR-301
OFF
P-301A
OFF
P-301B
T-201
###
OFF
P-201
OFF
P-601
P-502
T-602
OFF
T-601
###
P-601
OFF
P-705
OFF
P-706
CHEM FEED SKID
###
P-703
###
P-704
T-202
OFF
P-202
OFF
P-602
W-110 LVL ###
W-120 LVL ###
W-130 LVL ###
W-140 LVL ###
W-110 FLW ###
W-120 FLW ###
W-130 FLW ###
W-140 FLW ###
W-610 LVL ###
W-620 LVL ###
W-630 LVL ###
W-640 LVL ###
W-610 FLW ###
W-620 FLW ###
W-630 FLW ###
W-640 FLW ###
Go to Flow Totals
Go to Extract Well
Go To Carbon/ Sump Sys
Go To FBR System
Go To Aeration /Trimite
Go To Reinject Wells
Go To Chem Feed
Go to Alarm Screen

TOTALIZED FLOWS

TOTALIZED FLOW VALUES
RESET AT 100,000,000 GPM

FT-110 = ####0###

FT-120 = ####0###

FT-130 = ####0###

FT-140 = ####0###

FT-601 = ####0###

FT-610 = ####0###

FT-620 = ####0###

FT-630 = ####0###

FT-640 = ####0###

Main Screen

Alarm Screen

WELL 110 PUMP CONTROL

Description	Current Value	Push To Change
Hand/Off/Auto Control	AUTO	F2
Pump Start		F3
P-110 Status	STOPPED	
Well Level	####	
Line Flow	####	

WELL 120 PUMP CONTROL

Description	Current Value	Push To Change
Hand/Off/Auto Control	AUTO	F5
Pump Start		F6
P-120 Status	RUNNING	
Well Level	####	
Line Flow	####	

WELL 130 PUMP CONTROL

Description	Current Value	Push To Change
Hand/Off/Auto Control	AUTO	F10
Pump Start		F11
P-130 Status	RUNNING	
Well Level	####	
Line Flow	####	

WELL 140 PUMP CONTROL

Description	Current Value	Push To Change
Hand/Off/Auto Control	AUTO	F13
Pump Start		F14
P-140 Status	RUNNING	
Well Level	####	
Line Flow	####	

Main Screen

Gound Water Line Pressure ####

Gound Water Line Flow ####

Setpoint Screen

Alarm Screen

FBR FEED PUMP CONTROL

Description	Current Value	Push To Change
Hand/Off/Auto Control	HAND	F2
Pump Start		F3
P-201 Status	RUNNING	

GAC BACKWASH RETURN PUMP CONTROL

Description	Current Value	Push To Change
Hand/Off Control	OFF	F5
Pump Start		F6
P-202 Status	RUNNING	

LGAC FLOW CONTROL VALVE

Description	Current Value	Push To Change
Hand/Auto Control	AUTO	F10
FCV-201 % Open	####	
FCV-201 Hand % Setpoint	###	F11

BACKWASH HOLDING PUMP CONTROL

Description	Current Value	Push To Change
Hand/Off/Auto Control	HAND	F13
Pump Start		F14
P-801 Status	RUNNING	

Description	Current Value
FBR Feed Tank T-201 Level	####
Backwash Sump T-801 Level	####

Main Screen

Setpoint Screen

Alarm Screen

FLUIDIZATION PUMP A CONTROL

Description	Current Value	Push To Change
Off/Auto Control	OFF	F2
Pump Start		F3
P-301A Status	RUNNING	

FLUIDIZATION PUMP B CONTROL

Description	Current Value	Push To Change
Off/Auto Control	AUTO	F5
Pump Start		F6
P-301B Status	RUNNING	

NUTRIENT PUMP CONTROL

Description	Current Value	Push To Change
Off/Auto Control	OFF	F10
P-701 Speed	####	

ELECTRON DONOR PUMP CONTROL

Description	Current Value	Push To Change
Off/Auto Control	OFF	F13
P-702 Speed	####	

Description	Current Value
FV-301 Status	OPEN
PH Level	####
PSL-301 Status	OPEN
PSH-301 Status	OPEN

Main Screen

Setpoint Screen

Alarm Screen

AERATION TANK & TRIMITE FILTER

Description	Current Value
T-401 Level	####
Trimite Filter Status	ONLINE
T-501 Level	####

AERATED WATER LEVEL CONTROL VALVE

Description	Current Value	Push To Change
Hand/Auto Control	AUTO	F5
LCV-401 % Open	####	
LCV-401 Hand % Setpoint	###	F6

FILTER INFLUENT PUMP CONTROL

Description	Current Value	Push To Change
Hand/Off/Auto Control	HAND	F10
Pump Start		F11
P-401 Status	RUNNING	

AIR BLOWER CONTROL

Description	Current Value	Push To Change
Hand/Off/Auto Control	HAND	F13
Pump Start		F14
B-401 Status	RUNNING	

Description	Current Value
PSL-401 Status	OPEN

Main Screen

Setpoint Screen

Alarm Screen

FBR PH Alarm Setpoints

Description	Current Value	To Change	Range	Typical Value
FBR PH Low Alarm Setpoint	###	F4	0-14	6
FBR PH High Alarm Setpoint	###	F5	0-14	8
FBR High Temperature Alarm Setpoint	###	F6	0-50 C	40

LMI Pumps Feed Flow Proportionality Constant

Description	Current Value	To Change	Range	Typical Value
Nutrient Feed Pump P-701 Constant	#.##	F12	0-2.00	1.00
Electron Donor Pump P-702 Constant	#.##	F13	0-2.00	1.00
Filter Polymer Feed Pump P-704 Constant	#.##	F14	0-2.00	1.00

Main Screen | Previous Screen | Alarm Screen

T-401 Level Alarm Setpoints & Control Valve LCV-401 Settings

Description	Current Value	To Change	Range	Typical Value
Maximum Flow LCV-401 Position	###	F3	0-100%	40%
Maximum Flow T-401 Level	###	F4	6"-300"	120"
Minimum Flow T-401 Level	###	F5	6"-300"	90"
T-401 Low Level Alarm Setpoint	###	F6	6-300"	60"
T-401 High Level Alarm Setpoint	###	F7	6-300"	250"

T-501 Level Alarm & Trimite Flush Setpoints

Description	Current Value	To Change	Range	Typical Value
T-501 Low Low Level Alarm Setpoint	###	F11	12"-132"	18"
T-501 Low Level Alarm Setpoint	###	F12	12"-132"	108"
T-501 High Level Alarm Setpoint	###	F13	12"-132"	132"
Clarifier Flush LCV-601 Open %	###	F14	0-100	45

Main Screen | Previous Screen | Alarm Screen

Reinjection Well Alarm Setpoints

Description	Current Value	To Change	Range	Typical Value
Well-610 High Level Alarm Setpoint	###	F3	0-250'	200'
Well-620 High Level Alarm Setpoint	###	F4	0-250'	200'
Well-630 High Level Alarm Setpoint	###	F5	0-250'	200'
Well-640 High Level Alarm Setpoint	###	F6	0-250'	200'
Well-610 Low Flow Alarm Setpoint	###	F9	0-150 GPM	30 GPM
Well-610 High Flow Alarm Setpoint	###	F10	0-150 GPM	70 GPM
Well-620 Low Flow Alarm Setpoint	###	F11	0-150 GPM	30 GPM
Well-620 High Flow Alarm Setpoint	###	F12	0-150 GPM	70 GPM
Well-630 Low Flow Alarm Setpoint	###	F13	0-150 GPM	30 GPM
Well-630 High Flow Alarm Setpoint	###	F14	0-150 GPM	70 GPM
Well-640 Low Flow Alarm Setpoint	###	F15	0-150 GPM	30 GPM
Well-640 High Flow Alarm Setpoint	###	F16	0-150 GPM	70 GPM

Main Screen | Previous Screen | Setpoint Screen 2 | Alarm Screen

Filtered Water Reinjection Line Alarm Setpoints

Description	Current Value	To Change	Range	Typical Value
FT601 Low Flow Alarm Setpoint	###	F3	0-400 GPM	120 GPM
FT601 High Flow Alarm Setpoint	###	F4	0-400 GPM	300 GPM
PT601 Low Pressure Alarm Setpoint	###	F5	0-100 PSI	20 PSI

Control Valve LCV-601 Settings

Description	Current Value	To Change	Range	Typical Value
Maximum Flow LCV-601 Position	###	F11	0-100%	40%
Maximum Flow T-601 Level	###	F12	12"-132"	120"
Minimum Flow T-601 Level	###	F13	12"-132"	90"

Main Screen | Previous Screen | Setpoint Screen 1 | Alarm Screen

FILTER COAGULANT PUMP CONTROL

Description	Current Value	Push To Change
Off/Auto Control	AUTO	F2
P-703 Speed	####	

FILTER POLYMER PUMP CONTROL

Description	Current Value	Push To Change
Off/Auto Control	OFF	F5
P-704 Speed	####	

CLARIFIER COAGULANT PUMP CONTROL

Description	Current Value	Push To Change
Off/Auto Control	OFF	F10
P-705 Status	RUNNING	

CLARIFIER POLYMER PUMP CONTROL

Description	Current Value	Push To Change
Off/Auto Control	OFF	F13
P-706 Status	RUNNING	

Main Screen | Setpoint Screen | Alarm Screen

REINJECTION PUMP CONTROL

Description	Current Value	Push To Change
Hand/Off/Auto Control	OFF	F2
Pump Start		F3
P-601 Status	RUNNING	
Line Pressure	####	
Reinjection Flow	####	

GAC BACKWASH PUMP CONTROL

Description	Current Value	Push To Change
Off/Auto Control	AUTO	F5
Pump Start		F6
P-602 Status	RUNNING	

REINJECTION WATER LEVEL CONTROL VALVE

Description	Current Value	Push To Change
Hand/Auto Control	AUTO	F10
LCV-601 % Open	####	
LCV-601 Hand % Setpoint	###	F11

REINJECTION WELLS

Description	Current Value
Well 610 Level	####
Well 610 Line Flow	####
Well 620 Level	####
Well 620 Line Flow	####
Well 630 Level	####
Well 630 Line Flow	####
Well 640 Level	####
Well 640 Line Flow	####

Main Screen

Setpoint Screen

Alarm Screen

Extraction Well Alarm Setpoints

Description	Current Value	To Change	Range	Typical Value
Well-110 Low Level Alarm Setpoint	###	F3	0-250'	50'
Well-120 Low Level Alarm Setpoint	###	F4	0-235'	50'
Well-130 Low Level Alarm Setpoint	###	F5	0-250'	50'
Well-140 Low Level Alarm Setpoint	###	F6	0-235'	50'
Well-110 Low Flow Alarm Setpoint	###	F9	0-150 GPM	50 GPM
Well-110 High Flow Alarm Setpoint	###	F10	0-150 GPM	140 GPM
Well-120 Low Flow Alarm Setpoint	###	F11	0-150 GPM	20 GPM
Well-120 High Flow Alarm Setpoint	###	F12	0-150 GPM	60 GPM
Well-130 Low Flow Alarm Setpoint	###	F13	0-150 GPM	50 GPM
Well-130 High Flow Alarm Setpoint	###	F14	0-150 GPM	140 GPM
Well-140 Low Flow Alarm Setpoint	###	F15	0-150 GPM	20 GPM
Well-140 High Flow Alarm Setpoint	###	F16	0-150 GPM	60 GPM

Main Screen | Previous Screen | Setpoint Screen 2 | Alarm Screen

Gound Water Line Alarm Setpoints

Description	Current Value	To Change	Range	Typical Value
FT150 Low Flow Alarm Setpoint	###	F3	0-400 GPM	100 GPM
FT150 High Flow Alarm Setpoint	###	F4	0-400 GPM	375 GPM
PT150 Low Pressure Alarm Setpoint	###	F5	0-100 PSI	10 PSI
PT150 High Pressure Alarm Setpoint	###	F6	0-100 PSI	40 PSI

Main Screen | Previous Screen | Setpoint Screen 1 | Alarm Screen

T-201 & T-801 Level Alarm Setpoints

Description	Current Value	To Change	Range	Typical Value
T-201 Low Level Alarm Setpoint	###	F3	12"-132"	48"
T-201 High Level Alarm Setpoint	###	F4	12"-132"	108"
T-801 Low Level Setpoint	###	F5	0-250"	30"
T-801 High Level Alarm Setpoint	###	F6	0-250"	200"

Flow Control Valve FCV-201 Settings

Description	Current Value	To Change	Range	Typical Value
Maximum Flow FCV-201 Position	###	F11	0-100%	40%
Maximum Flow T-201 Level	###	F12	12"-132"	110"
Minimum Flow T-201 Level	###	F13	12"-132"	60"

Main Screen | Previous Screen | Alarm Screen

MM/DD/YY	1H:MM:SS PM	MM/DD/YY	1H:MM:SS PM	PAL-301	LOW FBR FLUIDIZATION*
MM/DD/YY	1H:MM:SS PM	MM/DD/YY	1H:MM:SS PM	PAL-401	LOW AERATION AIR PRESSURE
MM/DD/YY	1H:MM:SS PM	MM/DD/YY	1H:MM:SS PM	LAL-401	LOW AERATION TANK LEVEL
MM/DD/YY	1H:MM:SS PM	MM/DD/YY	1H:MM:SS PM	LAH-401	HIGH AERATION TANK LEVEL
MM/DD/YY	1H:MM:SS PM	MM/DD/YY	1H:MM:SS PM	LAHH-401	HIGH-HIGH AERATION TANK*
MM/DD/YY	1H:MM:SS PM	MM/DD/YY	1H:MM:SS PM	LALL-502	LOW-LOW FILTER*
MM/DD/YY	1H:MM:SS PM	MM/DD/YY	1H:MM:SS PM	LAL-502	LOW FILTER*
MM/DD/YY	1H:MM:SS PM	MM/DD/YY	1H:MM:SS PM	LAH-502	HIGH FILTER*
MM/DD/YY	1H:MM:SS PM	MM/DD/YY	1H:MM:SS PM	LAHH-501	HIGH-HIGH FILTER*
MM/DD/YY	1H:MM:SS PM	MM/DD/YY	1H:MM:SS PM	AAH-501	HIGH EFFLUENT TURBIDITY
MM/DD/YY	1H:MM:SS PM	MM/DD/YY	1H:MM:SS PM	FAL-601	LOW REINJECTION FLOW RATE
MM/DD/YY	1H:MM:SS PM	MM/DD/YY	1H:MM:SS PM	FAH-601	HIGH REINJECTION FLOW RATE
MM/DD/YY	1H:MM:SS PM	MM/DD/YY	1H:MM:SS PM	PAL-601	LOW WELL FIELD LINE*
MM/DD/YY	1H:MM:SS PM	MM/DD/YY	1H:MM:SS PM	PAH-601	HIGH WELL FIELD LINE*
MM/DD/YY	1H:MM:SS PM	MM/DD/YY	1H:MM:SS PM	PAL-610	LOW REINJECTION WELL 610*
MM/DD/YY	1H:MM:SS PM	MM/DD/YY	1H:MM:SS PM	PAL-620	LOW REINJECTION WELL 620*
MM/DD/YY	1H:MM:SS PM	MM/DD/YY	1H:MM:SS PM	PAL-630	LOW REINJECTION WELL 630*
MM/DD/YY	1H:MM:SS PM	MM/DD/YY	1H:MM:SS PM	PAL-640	LOW REINJECTION WELL 640*
MM/DD/YY	1H:MM:SS PM	MM/DD/YY	1H:MM:SS PM	LSH-610	HIGH REINJECTION WELL 610*
MM/DD/YY	1H:MM:SS PM	MM/DD/YY	1H:MM:SS PM	LSH-620	HIGH REINJECTION WELL 620*
MM/DD/YY	1H:MM:SS PM	MM/DD/YY	1H:MM:SS PM	LSH-630	HIGH REINJECTION WELL 630*
MM/DD/YY	1H:MM:SS PM	MM/DD/YY	1H:MM:SS PM	LSH-640	HIGH REINJECTION WELL 640*
MM/DD/YY	1H:MM:SS PM	MM/DD/YY	1H:MM:SS PM	FAL-610	REINJECTION WELL 610 LOW*
MM/DD/YY	1H:MM:SS PM	MM/DD/YY	1H:MM:SS PM	FAH-610	REINJECTION WELL 610 HIGH*
MM/DD/YY	1H:MM:SS PM	MM/DD/YY	1H:MM:SS PM	FAL-620	REINJECTION WELL 620 LOW*
MM/DD/YY	1H:MM:SS PM	MM/DD/YY	1H:MM:SS PM	FAH-620	REINJECTION WELL 620 HIGH*
MM/DD/YY	1H:MM:SS PM	MM/DD/YY	1H:MM:SS PM	FAL-630	REINJECTION WELL 630 LOW*

Main Screen | Previous Screen | Alarm Silence

APPENDIX D – FBR Valve Position Chart

VALVE POSITION CHART

AERATION TANK, TRIMITE FILTER, EFFLUENT, and CLARIFIER VALVE CHART

	Aeration Tank Inlet Valve	Aeration Tank Outlet Valve	Filter Influent Pump Discharge Valve	Aeration Tank Flow Control Valve[3]	Filter Influent Pump Recycle	Aeration Blower Isolation Valve	Aeration Diffuser Bypass Valve	Filter Inlet Valve[1]	Filter Effluent Flow Control Valve[3]	Filter Effluent & Backwash Tank Inlet Valve	Filter Effluent Startup Recycle Valve	Reinjection Pump Inlet Valve	Reinjection Pump Outlet Valve	Reinjection Flow Control Valve[3]	Backwash Sump and Clarifier Inlet Valve	Clarifier Drain Valve
Valve Tag Number:	V-401	V-406	V-408	LCV-401	V-409	V-404	V-402	V-514	LCV-501	V-517	V-519	V-601	V-603	LCV-601	V-804	V-810
PID Number:	PID-4	PID-4	PID-4	PID-4	PID-4	PID-4	PID-4	PID-5	PID-5	PID-5	PID-5	PID-6	PID-6	PID-6	PID-8	PID-8
PROCESS OPERATION																
Carbon Media Loading	U	U	U	X	U	U	U	U	X	U	X	U	U	U	O	X
Wash Media and Est. Fluidization	U	U	U	X	U	O	U	O	X	U	X	U	U	U	O	X
FBR SHUTDOWN Mode	U	U	U	X	O	U	U	O	X	O	X	O	O	X	O	X
Feed SHUTDOWN Mode	U	U	U	X	O	U	U	U	O	O	X	O	X	O	O	X
RUN Mode	O	O	O	O	O	O	X	O	O	O	X	O	X	O	O	X
Startup Recycle	O	O	O	O	O	O	O	O	O	X	O	U	U	U	U	X

Legend:

O - Valve Open

X- Valve Closed

U - Valve not applicable to specified operation. Valve position **unchanged** from last specified position.

Notes:

1. Valves and backwash controls on the Trimite Filter Assembly are discussed in its O&M manual
2. All manual valves(V-612, V-626, V-636, V-646) to reinjection wells require adjustment to set desired reinjection flow distribution.
3. Refer to Controls Description for operation of automatic valves.

VALVE POSITION CHART

FEED TANK, FBR TANK, and FBR PUMP SKID VALVE CHART

	Feed Tank Isolation Valve	Feed Pump Discharge Valve	Feed Flow Control Valve[3]	Feed Startup Recycle Valve	FBR Feed Inlet	Strainer Inlet	Strainer Outlet	P-301A Fluidization Pmp Suction Valve	P-301A Fluidization Pmp Discharge Valve	P-301B Fluidization Pmp Suction Valve	P-301B Fluidization Pmp Discharge Valve	FBR Manual Fluidization Flow Control Valve	FBR Flow Valve[3]	Electron Donor Supply Valve	Nutrient Solution Supply Valve	FBR Unscreened Drain Valve	FBR Screened Drain Valve	In-Bed Cleaning Water Supply Valve[4]
Valve Tag Number:	V-202	V-203	FCV-201	V-335	V-301	V-302	V-303	V-307	V-308	V-304	V-305	V-316	FV-301	V-331	V-329	V-319	V-318	V-324
PID Number:	PID-2	PID-2	PID-2	PID-3	PID-3	PID-3	PID-3	PID-3	PID-3	PID-3	PID-3	PID-3	PID-3	PID-3	PID-3	PID-3	PID-3	PID-3
PROCESS OPERATION																		
Carbon Media Loading	U	U	X	X	U	U	U	U	U	X	X	X	X	U	U	X	X	X
Wash Media and Est. Fluidization	U	U	X	X	U	O	O	O	O	X	X	adjustable[2]	O	O	O	X	X	X
FBR SHUTDOWN Mode	U	U	X	X	U	U	U	O	O	X	X	U	X	U	U	X	X	X
Feed SHUTDOWN Mode	U	U	X	X	U	U	U	U	U	X	X	adjustable[2]	O	U	U	X	X	X
RUN Mode	O	O	O	X	O	O	O	O	O	X	X	adjustable[2]	O	O	O	X	X	X
Startup Recycle	U	U	X	O	O	O	O	O	O	X	X	adjustable[2]	O	O	O	X	X	X

Legend:

O - Valve Open

X- Valve Closed

U - Valve not applicable to specified operation. Valve position **unchanged** from last specified position.

Notes:

1. P-301A is used for fluidization during normal RUN Mode. Alternate Fluidization Pump P-301B is Off.
2. Manual Valve requires operator adjustment at startup to set Normal System Fluidization Flow (NSFF).
3. Refer to Controls Description for operation of automatic valves.
4. In-Bed Cleaning System water supply will be used in 30 minute intervals to reduce bed height only when the biomass separators are unable to control bed height.

APPENDIX E – FBR System and Vessel Drawings

NASA JPL
OU-1 Treatment System

Index of Drawings

DRAWING NO.	TITLE
PFD-1	Process Flow Diagram
PIDLA	P&ID Legend Sheet 1 of 2
PIDLB	P&ID Legend Sheet 2 of 2
PID-1	P&ID FBR Treatment System
PID-2	P&ID FBR Treatment System
PID-3	P&ID FBR Treatment System
PID-4	P&ID FBR Treatment System
PID-5	P&ID FBR Treatment System
PID-6	P&ID FBR Treatment System
PID-7	P&ID FBR Treatment System
PID-8	P&ID FBR Treatment System
M-1	General Arrangement OU-1 Treatment System (Removed)
M-100	Fluid Bed Reactor Assembly Drawing
M-102	Biomass Separators Installation FBR-301
M-103	Flowmeter Installation Detail
M-110	Aeration Tank Assembly Drawing
M-130	Electrical Equipment Building Arrangement
M-140	Clarifier T-802 Arrangement
E-1	One-Line Drawing
41074-894-1	Electrical Schematic for FBR
41074-894-2	Electrical Schematic for FBR
41074-894-3	Electrical Schematic for FBR
41074-894-4	Electrical Schematic for FBR
41074-894-5	Electrical Schematic for FBR
41074-894-6	Electrical Schematic for FBR
41074-894-7	Electrical Schematic for FBR
41074-894-8	Electrical Schematic for FBR
41074-894-9	Electrical Schematic for FBR
41074-894-10	Terminal Strips for FBR
41074-894-11	General Layout Control Panel for FBR
41074-894-12	Interconnect List for Power/Signal Wires
3100368031	Trimite Control Panel Assembly, 1 of 2
3100368031	Trimite Control Panel Assembly, 2 of 2
3100368032	Trimite Power Panel Assembly
3100367122	Trimite One-Line Diagram
3100367121	Trimite Electrical Schematic, 1 of 2
3100367121	Trimite Electrical Schematic, 2 of 2
3100367123	Trimite Instrument Loop Diagram, 1 of 3
3100367123	Trimite Instrument Loop Diagram, 2 of 3
3100367123	Trimite Instrument Loop Diagram, 3 of 3

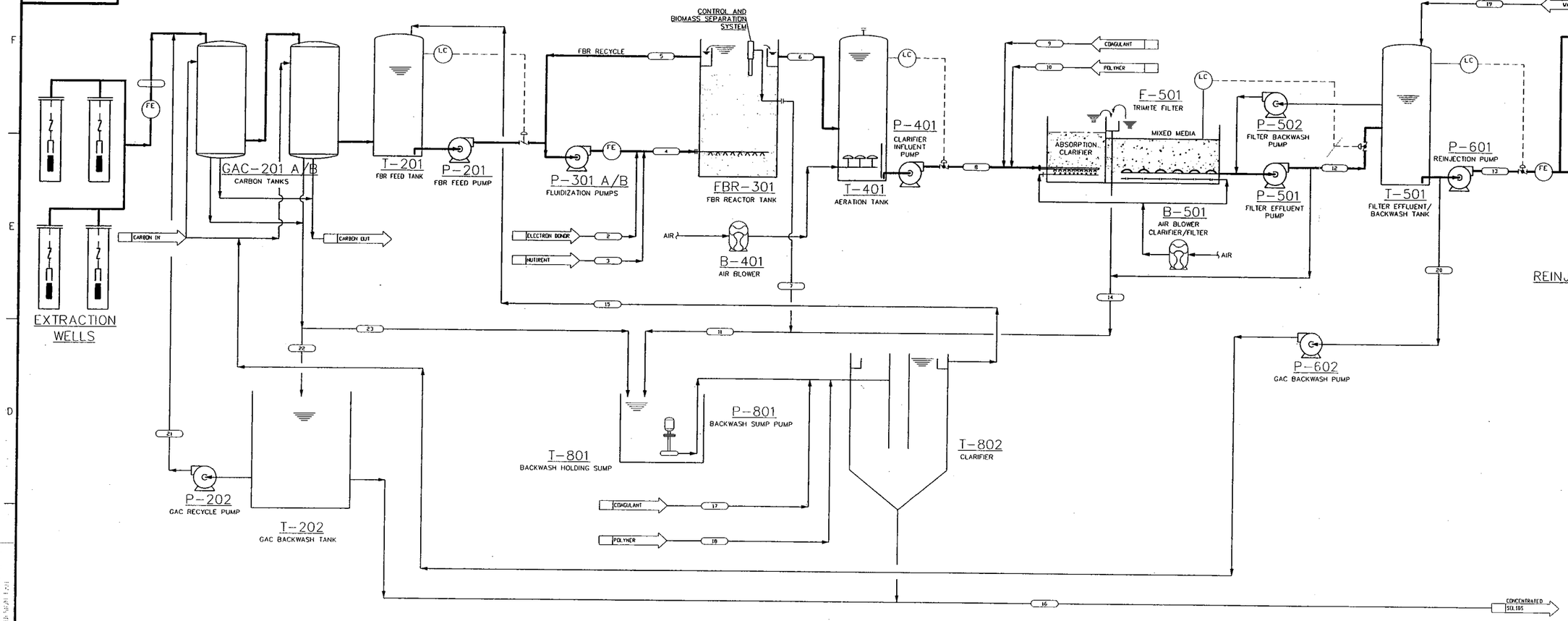

MATERIAL BALANCE

Values During Effluent Discharge	Line Number																						
Characteristic	1	2	3	4	5	6	7	8	9	10	11	12	13	14	15	16	17	18	19	20	21	22	23
FLOW (NOTE 4) (NOTE 7) gal/min	250	–	–	1320	1050	258	12	258	–	–	20	258	250	(NOTE 5) 8	20	(NOTE 8) 0.28	–	–	(NOTE 9)	(NOTE 10)	(NOTE 11)	(NOTE 12)	(NOTE 13)
ClO_4 (NOTE 3) mg/L	3.6	–	–	0.7	<0.004	<0.004	<0.004	<0.004	–	–	<0.004	<0.004	<0.004	<0.004	<0.004	<0.004	–	–					
NO_3-N (NOTE 3) mg/L	11.5	–	–	2.2	<0.1	<0.1	<0.1	<0.1	–	–	<0.1	<0.1	<0.1	<0.1	<0.1	<0.1	–	–					
DISSOLVED OXYGEN (NOTE 3) mg/L	2.0	–	–	0.4	<0.1	<0.1	>5.0	>5.0	–	–	>5.0	>5.0	>5.0	>5.0	–	–	–	–					
TSS mg/L	<2	–	–	8.7	10	10	200	10	–	–	224	<2	<2	260	23	15,000	–	–					
TSS lbs/day	<6	–	–	–	–	31.0	28.8	31.0	–	–	53.8	<6	<6	25.0	5.5	48.3	–	–					
NUTRIENT (NOTE 1) gal/day	–	–	3.0	–	–	–	–	–	–	–	–	–	–	–	–	–	–	–					
COAGULANT FEED gal/day	–	–	–	–	–	–	–	–	(NOTE 6)	–	–	–			–		(NOTE 6)	–					
ELECTRON DONOR (NOTE 2) gal/day	–	45	–	–	–	–	–	–	–	–	–	–	–	–	–	–	–	–					
POLYMER FEED gal/day	–	–	–	–	–	–	–	–	–	(NOTE 6)	–	–	–	–	–	–	–	(NOTE 6)					

GENERAL NOTES:

1. FLOW IS FOR NUTRIENT MIX CONTAINING 1.8 LB N AND 0.4 LB P PER GALLON.
2. FLOW IS FOR 50% ACETIC ACID.
3. UNLESS STATED OTHERWISE, CONCENTRATIONS ARE AVERAGE DESIGN.
4. UNLESS STATED OTHERWISE, FLOWS ARE DESIGN FLOWS.
5. AVERAGE FLOW INDICATED (BASED ON 1 BACKWASHPER DAY). INSTANTANEOUS FLOW = 1050 GPM MAXIMUM.
6. COAGULANT AND POLYMER FEED AS REQUIRED.
7. SYSTEM DESIGN MAXIMUM HYDRAULIC CAPACITY = 350 G.P.M.
8. AVERAGE FLOW INDICATED. CONCENTRATED SOLIDS MAY BE ACCUMULATED IN CLARIFIER & PERIODICALLY DISCHARGE TO TRANSPORTABLE TANKER OR POTW.
9. MANUALLY CONTROLLED INTERMITTENT FLOW AT 50–100 G.P.M.
10. MANUALLY CONTROLLED GAC BACKWASH AT 750 G.P.M.
11. MANUALLY CONTROLLED INTERMITTENT FLOW AT 20 G.P.M.
12. MANUALLY CONTROLLED GAC BACKWASH WASTE AT 750 G.P.M.
13. MANUALLY CONTROLLED CLEAN GAC BACKWASH AT 750 G.P.M.

REV	DATE	DESCRIPTION OF REVISION	REVISED BY	CHECKED
5	05-14-04	MOVE LINE 20	LJ	SF
4	04-13-04	ADDED CLARIFIER UNDER FLOW LINE	LJ	SF
3	04-06-04	REVISED PER JPL COMMENTS & SHAW REVIEW	DAP	DW
2	02-20-04	INCORPORATED BATTELLE BACKWASH RECOVERY COMMENTS	HLS	HLS
1	02-06-04	INCORPORATED BATTELLE COMMENTS	LJ	SF

THIS IS A COMPUTER GENERATED DRAWING AND ONLY EDITS CONSISTENT WITH SHAW'S ORIGINAL CAD FORMAT SHALL BE CONSIDERED VALID COPIES.

USFilter
Envirex Products
Waukesha, WI 800-524-6324

ALL INFORMATION CONTAINED ON THIS DOCUMENT IS THE PROPERTY OF SHAW ENVIRONMENTAL, INC. ("SEI") AND/OR ITS AFFILIATES. THE DESIGN CONCEPTS AND INFORMATION CONTAINED HEREIN ARE PROPERTY OF SEI AND ARE SUBMITTED IN CONFIDENCE. THEY ARE NOT TRANSFERABLE AND MUST BE USED ONLY FOR THE USE AND PROJECT FOR WHICH THE DOCUMENT IS EXPRESSLY SUBMITTED. THEY MUST NOT BE DISCLOSED, REPRODUCED, LOANED OR USED IN ANY OTHER MANNER WITHOUT THE EXPRESS WRITTEN CONSENT OF SEI. SEI ASSUMES NO RESPONSIBILITY OR LIABILITY FOR THE USE THIS DOCUMENT OR THE DESIGN CONCEPTS AND INFORMATION CONTAINED HEREIN FOR ANOTHER PROJECT, OR IN A MANNER THAT DOES NOT RELATE TO THE ORIGINALLY INTENDED USE OF THIS DOCUMENT. IN NO EVENT SHALL THIS DOCUMENT OR THE DESIGN CONCEPTS AND INFORMATION CONTAINED HEREIN BE USED IN ANY MANNER DETRIMENTAL TO THE INTEREST OF SEI. THE RIGHTS AND OBLIGATIONS OF SEI AND ITS CUSTOMER ARE FURTHER LIMITED IN THE AGREEMENT BETWEEN THEM FOR THIS PROJECT. ALL PATENT AND OTHER RIGHTS ARE RESERVED. ACCEPTANCE OF THE DELIVERY OF THIS DOCUMENT CONSTITUTES AGREEMENT TO THESE TERMS AND CONDITIONS.

SHAW'S AND USFILTER ENVIREX PRODUCTS' FLUIDIZED BED REACTOR TECHNOLOGY IS COVERED BY ONE OR MORE OF U.S. PATENT NOS. 5296200, 5296201, 5372712, 5411660, 5454938, 5538635, 5552052, 5584996, 5750028, 5766491, 5788842, 5976365, AND/OR PATENTS PENDING.

Shaw®
Shaw Environmental, Inc.
Lawrenceville, N.J. 609-936-9300

NASA-JET PROPULSION LABORATORY
OU-1 TREATMENT SYSTEM, PASADENA, CA

PROCESS FLOW DIAGRAM
FLUID BED REACTOR SYSTEM

SHAW PROJECT# 100770

DRAWING SCALE	N/A
DESIGNED BY/DATE	SF/10-29-03
DRAWN BY/DATE	LJ/10-29-03
CHECKED BY/DATE	HS
SHEET SIZE	D
REVISION	3B
SHEET 1 OF 1	
DRAWING #	PFD-1
FILE #	100770PFD01-3B

PIPING SYMBOLS

- PRIMARY PROCESS FLOW PATH
- SECONDARY FLOW PATH
- HEAT TRACE
- INSULATED PIPELINE
- SKID LIMIT

INSTRUMENT LINE SYMBOLS

- PNEUMATIC SIGNAL
- ELECTRIC SIGNAL
- UNDEFINED SIGNAL
- INTERNAL SYSTEM LINK SOFTWARE OR DATA
- CAPILLARY TUBE

VALVE ACTUATOR SYMBOLS

(NO SYMBOL) = MANUAL FOR ON-OFF SERVICE

- HANDWHEEL (MANUAL OVERRIDE)
- ELECTRIC
- SOLENOID — (WITHOUT) (WITH) = MANUAL OVERRIDE
- DIAPHRAGM — AIR-TO AIR — (WITHOUT) (WITH) = POSITIONER
- DIAPHRAGM & SPRING — SPRING TO OPEN (WITHOUT) — SPRING TO CLOSE (WITH) = POSITIONER
- DOUBLE-ACTING CYLINDER — (WITHOUT) (WITH) = POSITIONER
- CYLINDER & SPRING — SPRING TO OPEN — SPRING TO CLOSE

SYMBOLS FOR VALVE ACTION IN THE EVENT OF ACTUATOR POWER FAILURE.

SYMBOL LOCATED BY VALVE- USED ONLY WHERE NECESSARY TO INCREASE UNDERSTANDING OF THE SYSTEM.

FO = FAIL OPEN

FC = FAIL CLOSED

FL = FAIL LOCKED

FI = FAIL INDETERMINATE (LAST POSITION)

F = USED WITH 3 WAY & 4 WAY VALVE- ARROWS SHOW PATHS OPEN TO FLOW ON POWER FAILURE.

SYMBOLS FOR SELF-ACTUATED REGULATORS

- SELF CONTAINED
- EXTERNAL TAP — PRESSURE REDUCING REGULATOR
- BACK PRESSURE REGULATOR
- DIFFERENTIAL PRESSURE REDUCING REGULATOR- SHOWN WITH INTERNAL AND EXTERNAL PRESSURE TAPS.
- PRESSURE RELIEF
- VACUUM RELIEF — RUPTURE DISC OR SAFETY HEAD
- ANGLE
- STRAIGHT — PRESSURE RELIEF
- ANGLE
- STRAIGHT WITH WELL — VACUUM RELIEF
- PRESSURE VACUUM RELIEF
- TEMPERATURE REGULATOR FILLED SYSTEM
- LEVEL REGULATOR. FLOAT OPERATED MECHANICAL LINKAGE
- CONTINUOUS DRAINER BALL FLOAT TYPE
- TANK — WITH EQUALIZING CONNECTION — TRAPS

HEAT EXCHANGER SYMBOLS

- SHELL & TUBE HEAT EXCHANGER
- ELECTRICAL HEATING ELEMENT
- AIR COOLED HEAT EXCHANGER
- HEAT EXCHANGER GENERAL
- DIRECT CONTACT JET MIXER

PRIME MOVERS FOR MOTOR DRIVEN EQUIPMENT

- ELECTRIC MOTOR
- PNEUMATIC ROTARY MOTOR

MOTOR DRIVEN EQUIPMENT

- CENTRIFUGAL PUMP
- ROTARY BLOWER
- FAN / BLOWER
- VERTICAL CENTRIFUGAL PUMP
- VERTICAL TURBINE
- SUBMERSIBLE PUMP
- CHEMICAL FEED PUMP
- PERISTALTIC PUMP
- DIAPHRAGM CHEMICAL FEED PUMP-WITH INTERNAL RELIEF VALVE
- PROGRESSIVE CAVITY PUMP
- DIAPHRAGM PUMP (PNEUMATIC OPERATION)
- LIQUID RING VACUUM PUMP
- AGITATOR OR MIXER

PIPING ACCESSORIES AND DETAILS

- STEAM TRAP
- Y STRAINER
- CONE STRAINER
- SCREEN STRAINER OR STATIC MIXER
- MIXING SECTION
- EJECTOR
- BACKFLOW PREVENTER
- SPRAY NOZZLE OR SPARGER
- CHEMICAL SEAL
- EXPANSION JOINT
- FLEX HOSE
- STRAIGHTENING VANES
- FILTER
- SCOPE LIMITS
- INSTRUMENT TAG
- FLOW METER
- THERMOWELL
- SIMPLEX BASKET STRAINER
- DUPLEX BASKET STRAINER
- AIR FILTER
- MIST ELIMINATOR
- PULSATION DAMPER
- SIGHT GLASS
- SPECTACLE BLIND
- RESTRICTION ORIFICE
- INSULATED FLANGE OR DIELECTRIC UNION — DU
- QUICK DISCONNECT ASSEMBLY
- SUMP/DRAIN
- CONCENTRIC REDUCER
- ECCENTRIC REDUCER FLAT ON TOP
- ECCENTRIC REDUCER FLAT ON BOTTOM
- ORIFICE FLANGE
- INTAKE/EXHAUST MUFFLER

VALVE SYMBOLS

- GATE
- GLOBE
- BALL
- PLUG
- 3 WAY PLUG
- BUTTERFLY
- CHECK
- DIAPHRAGM
- PINCH
- NEEDLE
- 3 WAY
- 4 WAY
- ANGLE
- KNIFE GATE
- WEIGHTED RELIEF
- VALVE (UNDEFINED TYPE)
- DAMPER

TANK ACCESSORIES

- MANHOLE/ACCESS
- COUPLING (HALF OR FULL)
- FLANGED NOZZLE
- INSULATION
- FLAME ARRESTOR
- TAG — EQUIPMENT TAG

MATERIAL

BRZ - BRASS/BRONZE
CIR - CAST IRON
CST - CARBON STEEL
CPR - COPPER
FRP - FIBERGLASS
GCS - GALVANIZED CARBON STEEL
LCS - LINED CARBON STEEL
TEF - TEFLON
CVC - CHLORINATED POLYVINYL CHLORIDE
PET - POLYETHYLENE
POP - POLYPROPYLENE
PVC - POLYVINYL CHLORIDE
RUB - RUBBER
S04 - 304 STAINLESS STEEL
S4L - 304L STAINLESS STEEL
S16 - 316 STAINLESS STEEL
S6L - 316L STAINLESS STEEL
VIT - VITON

TYPE

D = DUCT P = PIPE
H = HOSE T = TUBE

PIPE LINE DESIGNATION

6"-WW-S04P80-001-HT&I or N - P

- SIZE
- SERVICE (NOT SHOWN)
- PIPING SPECIFICATION
- LINE NO. (NOT SHOWN)
- HEAT TRACE (ELECTRIC)
- INSULATION
- NO HEAT TRACE OR INSULATION
- TYPE

GENERAL NOTE:

1. FOR INSTRUMENTATION SYMBOLS, AND LIST OF RELAY FUNCTIONS. SEE SHAW DRAWING NO. PID-LB (SHEET 2 OF 2).

THIS DRAWING IS PROVIDED FOR INFORMATION ONLY.

REV	DATE	DESCRIPTION OF REVISION	REVISED BY	CHECKED
3				
2				
1				
0	01-28-04	ISSUED FOR CONSTRUCTION	DAP	HS/RL
A	11-18-03	ISSUED FOR INFORMATION	LJ	SF

THIS IS A COMPUTER GENERATED DRAWING AND ONLY EDITS CONSISTENT WITH SHAW'S ORIGINAL CAD FORMAT SHALL BE CONSIDERED VALID COPIES.

NASA-JET PROPULSION LABORATORY
OU-1 TREATMENT SYSTEM, PASADENA, CA

PIPING & INSTRUMENTATION DIAGRAM
LEGEND SHEET

SHAW PROJECT# 100770

DRAWING SCALE: N/A
DESIGNED BY/DATE: SF/10-29-03
DRAWN BY/DATE: LJ/10-29-03
CHECKED BY/DATE: HS
SHEET SIZE: D
REVISION: 1
SHEET 1 OF 2
DRAWING #: PID-LA
FILE #: 100770LEGEND_SHT

USFilter
Envirex Products
Waukesha, WI 800-524-6324

ALL INFORMATION CONTAINED ON THIS DOCUMENT IS THE PROPERTY OF SHAW ENVIRONMENTAL, INC. ("SEI") AND/OR ITS AFFILIATES. THE DESIGN CONCEPTS AND INFORMATION CONTAINED HEREIN ARE PROPERTY OF SEI AND ARE SUBMITTED IN CONFIDENCE. THEY ARE NOT TRANSFERABLE AND MUST BE USED ONLY FOR THE USE AND PROJECT FOR WHICH THE DOCUMENT IS EXPRESSLY SUBMITTED. THEY MUST NOT BE DISCLOSED, REPRODUCED, LOANED OR USED IN ANY OTHER MANNER WITHOUT THE EXPRESS WRITTEN CONSENT OF SEI. SEI ASSUMES NO RESPONSIBILITY OR LIABILITY FOR THE USE THIS DOCUMENT OR THE DESIGN CONCEPTS AND INFORMATION CONTAINED HEREIN FOR ANOTHER PROJECT, OR IN A MANNER THAT DOES NOT RELATE TO THE ORIGINALLY INTENDED USE OF THIS DOCUMENT. IN NO EVENT SHALL THIS DOCUMENT OR THE DESIGN CONCEPTS AND INFORMATION CONTAINED HEREIN BE USED IN ANY MANNER DETRIMENTAL TO THE INTEREST OF SEI. THE RIGHTS AND OBLIGATIONS OF SEI AND ITS CUSTOMER ARE FURTHER LIMITED IN THE AGREEMENT BETWEEN THEM FOR THIS PROJECT. ALL PATENT AND OTHER RIGHTS ARE RESERVED. ACCEPTANCE OF THE DELIVERY OF THIS DOCUMENT CONSTITUTES AGREEMENT TO THESE TERMS AND CONDITIONS.

SHAW'S AND USFILTER ENVIREX PRODUCTS' FLUIDIZED BED REACTOR TECHNOLOGY IS COVERED BY ONE OR MORE OF U.S. PATENT NOS. 5296200, 5296201, 5372712, 5411660, 5454938, 5538635, 5552052, 5584996, 5750028, 5766491, 5788842, 5976365, AND/OR PATENTS PENDING.

Shaw®
Shaw Environmental, Inc.
Lawrenceville, N.J. 609-936-9300

SYMBOLS FOR FLOW MEASUREMENT

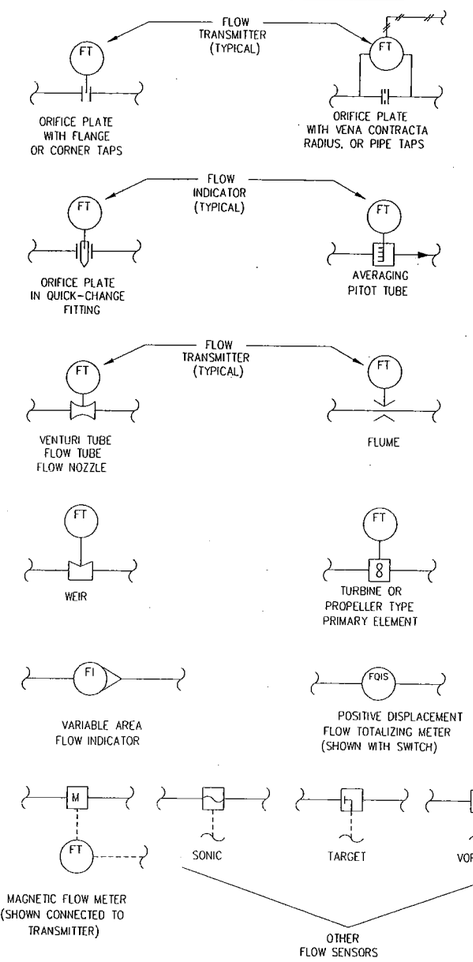

MISCELLANEOUS SYMBOLS

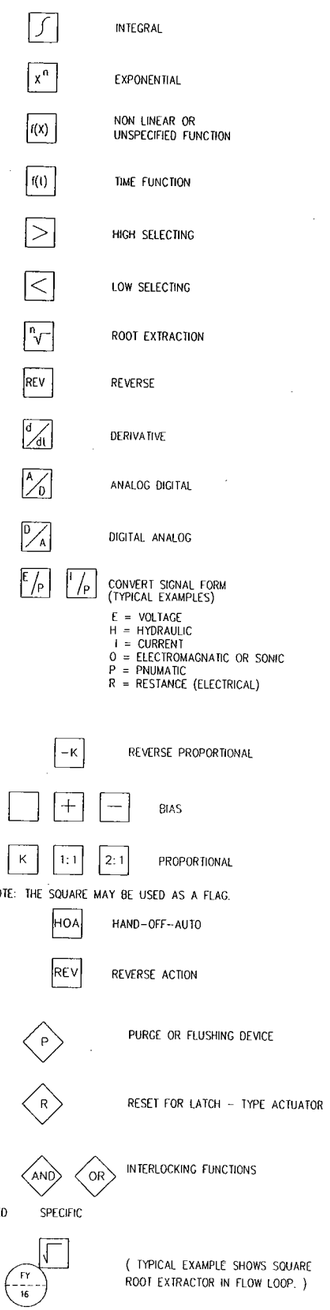

INSTRUMENT IDENTIFICATION LETTERS

FIRST LETTER		SUCCEEDING LETTERS		
MEASURE OR INIATING VARIABLE	MODIFIER	READOUT OR PASSIVE FUNCTION	OUTPUT FUNCTION	MODIFIER
A = ANALYSIS		ALARM		
B = BURNER, COMBUSTION		USER'S CHOICE	USER'S CHOICE	USER'S CHOICE
C = USER'S CHOICE			CONTROL	
D = USER'S CHOICE	DIFFERENTIAL			
E = VOLTAGE		SENSOR (PRIMARY ELEMENT)		
F = FLOW RATE	RATIO (FRACTION)			
G = USER'S CHOICE		GLASS, VIEWING DEVICE		
H = HAND				HIGH
I = CURRENT (ELECTRICAL)		INDICATE		
J = POWER	SCAN			
K = TIME, TIME SCHEDULE	TIME RATE OF CHANGE		CONTROL STATION	
L = LEVEL		LIGHT		LOW
M = USER'S CHOICE	MOMENTARY			MIDDLE, INTERMEDIATE
N = USER'S CHOICE		USER'S CHOICE	USER'S CHOICE	USER'S CHOICE
O = USER'S CHOICE		ORIFICE, RESTRICTION		
P = PRESSURE, VACUUM		POINT (TEST) CONNECTION		
Q = QUANTITY	INTERGRATE, TOTALIZE			
R = RADIATION		RECORD		
S = SPEED, FREQUENCY	SAFETY		SWITCH	
T = TEMPERATURE			TRANSMIT	
U = MULTIVARIABLE		MULTIFUNCTION	MULTIFUNCTION	MULTIFUNCTION
V = VIBRATION, MECH. ANALYSIS			VALVE, DAMPER, LOUVER	
W = WEIGHT, FORCE		WELL		
X = UNCLASSIFIED	X AXIS	UNCLASSIFIED	UNCLASSIFIED	UNCLASSIFIED
Y = EVENT, STATE OR PRESENCE	Y AXIS		RELAY, COMPUTE, CONVERT	
Z = POSITION, DIMENSION	Z AXIS		DRIVE, ACTUATOR, UNCLASSIFIED FINAL CONTROL ELEMENT	

NOTES:
1. ANY FIRST LETTER COMBINED WITH MODIFIER REPRESENTS A NEW AND SEPARARE MEASURED VARIABLE. EXAMPLES: PD = DIFFERENTIAL PRESSURE FQ = TOTALIZED OR INTEGRATED FLOW. EXCEPTION IS THE MODIFIER "J" FOR MULTIPOINT SCANNING.
2. FOR ANALYSIS NOT IDENTIFIED BY A SPECIFIC LETTER IN THE TABLE, USE FIRST LETTER "A" NEAR THE INSTRUMENT SYMBOL, SPECIFY THE NATURE OF THE ANALYSIS. EXAMPLE: PH
3. MEANING OF A "USER CHOICE" LETTER SHALL BE CONSISTENT THROUGHOUT A PROJECT, AND SHALL BE SPECIFIED IN THE DRAWING LEGEND.
4. UNCLASSIFED LETTER MAY HAVE A FEW DIFFERENT MEANINGS ON A PROJECT, THE MEANING SHALL BE SPCIFIED NEAR EACH INSTRUMENT SYMBOL USING THE UNCLASSIFIED LETTER.
5. THE MODIFIER "SCAN" APPLIES TO MULTIPOINT PRINTING INSTRUMENTS, SUCH AS CJRS (MULTIPOINT CONDUCTIVITY RECORDER WITH ALARM SWITCHES).

INSTRUMENT SYMBOLS

	PRIMARY CONTROL PANEL NORMALLY ACCESSIBLE TO OPERATOR	FIELD MOUNTED	AUXILIARY PANEL OR RACK NORMALLY ACCESSIBLE TO OPERATOR
DISCRETE INSTRUMENTS			
SHARED DISPLAY, SHARED CONTROL			
COMPUTER FUNCTION INCLUDING DISTRIB. CNTL. SYS.			
PROGRAMMABLE LOGIC CONTROLLER FUNCTION			

GENERAL NOTE:

1. FOR MECHANICAL SYMBOLS AND ADDITIONAL NOTES. SEE SHAW DRAWING NO. PID-LA (SHEET 1 OF 1)

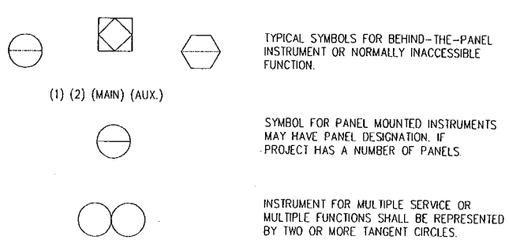

TYPICAL SYMBOLS FOR BEHIND-THE-PANEL INSTRUMENT OR NORMALLY INACCESSIBLE FUNCTION.

SYMBOL FOR PANEL MOUNTED INSTRUMENTS MAY HAVE PANEL DESIGNATION. IF PROJECT HAS A NUMBER OF PANELS.

INSTRUMENT FOR MULTIPLE SERVICE OR MULTIPLE FUNCTIONS SHALL BE REPRESENTED BY TWO OR MORE TANGENT CIRCLES.

THIS DRAWING IS PROVIDED FOR INFORMATION ONLY.

REV	DATE	DESCRIPTION OF REVISION	REVISED BY	CHECKED
3				
2				
1				
0	01-26-04	ISSUED FOR CONSTRUCTION	DAP	HS/RL
A	11-18-03	ISSUED FOR INFORMATION	LJ	SF

THIS IS A COMPUTER GENERATED DRAWING AND ONLY EDITS CONSISTENT WITH SHAW'S ORIGINAL CAD FORMAT SHALL BE CONSIDERED VALID COPIES.

NASA-JET PROPULSION LABORATORY
OU-1 TREATMENT SYSTEM, PASADENA, CA

PIPING & INSTRUMENTATION DIAGRAM
LEGEND SHEET

SHAW PROJECT# 100770

DRAWING SCALE	N/A
DESIGNED BY/DATE	SF/10-29-03
DRAWN BY/DATE	LJ/10-29-03
CHECKED BY/DATE	HS
SHEET SIZE	D
REVISION	1
SHEET	2 OF 2
DRAWING #	PID-LB
FILE #	100770LEGEND_SHT

USFilter
Envirex Products
Waukesha, WI 800-524-6324

ALL INFORMATION CONTAINED ON THIS DOCUMENT IS THE PROPERTY OF SHAW ENVIRONMENTAL, INC. ("SEI") AND/OR ITS AFFILIATES. THE DESIGN CONCEPTS AND INFORMATION CONTAINED HEREIN ARE PROPERTY OF SEI AND ARE SUBMITTED IN CONFIDENCE. THEY ARE NOT TRANSFERABLE AND MUST BE USED ONLY FOR THE USE AND PROJECT FOR WHICH THE DOCUMENT IS EXPRESSLY SUBMITTED. THEY MUST NOT BE DISCLOSED, REPRODUCED, LOANED OR USED IN ANY OTHER MANNER WITHOUT THE EXPRESS WRITTEN CONSENT OF SEI. SEI ASSUMES NO RESPONSIBILITY OR LIABILITY FOR THE USE THIS DOCUMENT OR THE DESIGN CONCEPTS AND INFORMATION CONTAINED HEREIN FOR ANOTHER PROJECT, OR IN A MANNER THAT DOES NOT RELATE TO THE ORIGINALLY INTENDED USE OF THIS DOCUMENT. IN NO EVENT SHALL THIS DOCUMENT OR THE DESIGN CONCEPTS AND INFORMATION CONTAINED HEREIN BE USED IN ANY MANNER DETRIMENTAL TO THE INTEREST OF SEI. THE RIGHTS AND OBLIGATIONS OF SEI AND ITS CUSTOMER ARE FURTHER LIMITED IN THE AGREEMENT BETWEEN THEM FOR THIS PROJECT. ALL PATENT AND OTHER RIGHTS ARE RESERVED. ACCEPTANCE OF THE DELIVERY OF THIS DOCUMENT CONSTITUTES AGREEMENT TO THESE TERMS AND CONDITIONS.

SHAW'S AND USFILTER ENVIREX PRODUCTS' FLUIDIZED BED REACTOR TECHNOLOGY IS COVERED BY ONE OR MORE OF U.S. PATENT NOS 5296200, 5296201, 5372712, 5411660, 5454938, 5538635, 5552052, 5584996, 5750028, 5766491, 5788842, 5976365, AND/OR PATENTS PENDING.

Shaw
Shaw Environmental, Inc.
Lawrenceville, N.J. 609-936-9300

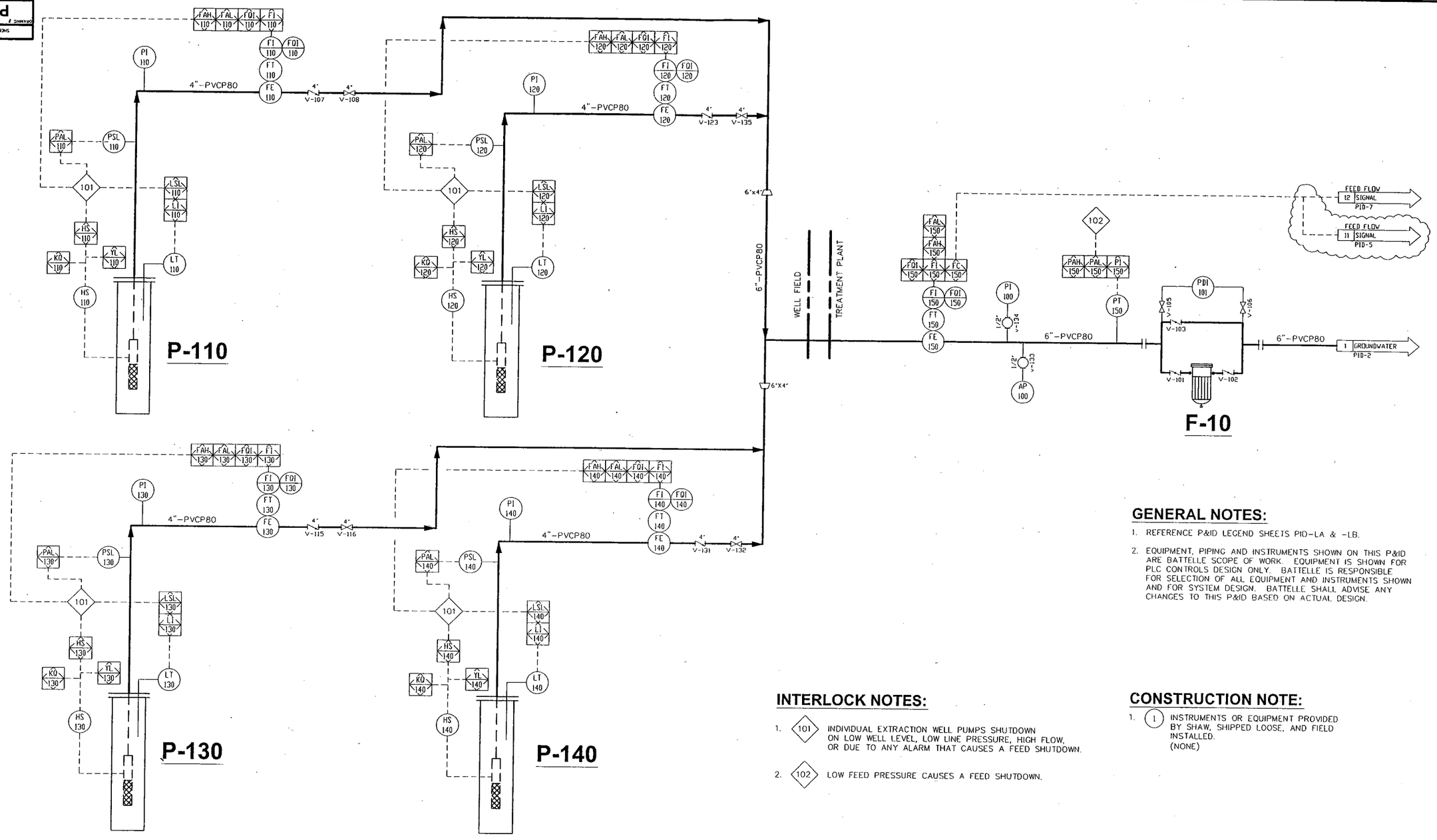

GENERAL NOTES:

1. REFERENCE P&ID LEGEND SHEETS PID-LA & -LB.
2. EQUIPMENT, PIPING AND INSTRUMENTS SHOWN ON THIS P&ID ARE BATTELLE SCOPE OF WORK. EQUIPMENT IS SHOWN FOR PLC CONTROLS DESIGN ONLY. BATTELLE IS RESPONSIBLE FOR SELECTION OF ALL EQUIPMENT AND INSTRUMENTS SHOWN AND FOR SYSTEM DESIGN. BATTELLE SHALL ADVISE ANY CHANGES TO THIS P&ID BASED ON ACTUAL DESIGN.

INTERLOCK NOTES:

1. 101 — INDIVIDUAL EXTRACTION WELL PUMPS SHUTDOWN ON LOW WELL LEVEL, LOW LINE PRESSURE, HIGH FLOW, OR DUE TO ANY ALARM THAT CAUSES A FEED SHUTDOWN.
2. 102 — LOW FEED PRESSURE CAUSES A FEED SHUTDOWN.

CONSTRUCTION NOTE:

1. (1) INSTRUMENTS OR EQUIPMENT PROVIDED BY SHAW, SHIPPED LOOSE, AND FIELD INSTALLED. (NONE)

LAST VALVE # USED 135

P-110/130 EXTRACTION WELL PUMP	P-120/140 EXTRACTION WELL PUMP	F-10 BAG FILTER
TYPE: SUBMERSIBLE PUMP CAPACITY: 125 G.P.M. @ 336' TDH MAT'L: 316 S.S. MOTOR: 15 HP, 460VAC, 3PH, 60HZ	TYPE: SUBMERSIBLE PUMP CAPACITY: 50 G.P.M. @ 325' TDH MAT'L: 316 S.S. MOTOR: 7.5 HP, 460VAC, 3PH, 60HZ	TYPE: SIMPLEX BAG FILTER CAPACITY: 400 GPM

REV	DATE	DESCRIPTION OF REVISION	REVISED BY	CHECKED
5	5-25-04	ADDED FEED FLOW SIGNAL	DL	KC
4	05-14-04	ADDED INTERLOCK 102	LJ	SF
3	04-13-04	ADDED CAPACITY NOTE ON F-10	LJ	SF
2	04-06-04	REVISED PER JPL COMMENTS & SHAW REVIEW	DAP	DW
1	02-25-04	REVISED PER BATTELLE AND SHAW REVIEW	LJ	

THIS IS A COMPUTER GENERATED DRAWING AND ONLY EDITS CONSISTENT WITH SHAW'S ORIGINAL CAD FORMAT SHALL BE CONSIDERED VALID COPIES.

NASA-JET PROPULSION LABORATORY
OU-1 TREATMENT SYSTEM, PASADENA, CA

PIPING & INSTRUMENTATION DIAGRAM
EXTRACTION WELLS

SHAW PROJECT# 100770

DRAWING SCALE	N/A
DESIGNED BY/DATE	SF/11-07-03
DRAWN BY/DATE	LJ/11-11-03
CHECKED BY/DATE	HS
SHEET SIZE	D
REVISION	4
SHEET	1 OF 8
DRAWING #	PID-1
FILE #	100770PID01-4

USFilter
Envirex Products
Waukesha, WI 800-524-6324

ALL INFORMATION CONTAINED ON THIS DOCUMENT IS THE PROPERTY OF SHAW ENVIRONMENTAL, INC. ("SEI") AND/OR ITS AFFILIATES. THE DESIGN CONCEPTS AND INFORMATION CONTAINED HEREIN ARE PROPERTY OF SEI AND ARE SUBMITTED IN CONFIDENCE. THEY ARE NOT TRANSFERABLE AND MUST BE USED ONLY FOR THE USE AND PROJECT FOR WHICH THE DOCUMENT IS EXPRESSLY SUBMITTED. THEY MUST NOT BE DISCLOSED, REPRODUCED, LOANED OR USED IN ANY OTHER MANNER WITHOUT THE EXPRESS WRITTEN CONSENT OF SEI. SEI ASSUMES NO RESPONSIBILITY OR LIABILITY FOR THE USE THIS DOCUMENT OR THE DESIGN CONCEPTS AND INFORMATION CONTAINED HEREIN FOR ANOTHER PROJECT, OR IN A MANNER THAT DOES NOT RELATE TO THE ORIGINALLY INTENDED USE OF THIS DOCUMENT. IN NO EVENT SHALL THIS DOCUMENT OR THE DESIGN CONCEPTS AND INFORMATION CONTAINED HEREIN BE USED IN ANY MANNER DETRIMENTAL TO THE INTEREST OF SEI. THE RIGHTS AND OBLIGATIONS OF SEI AND ITS CUSTOMER ARE FURTHER LIMITED IN THE AGREEMENT BETWEEN THEM FOR THIS PROJECT. ALL PATENT AND OTHER RIGHTS ARE RESERVED. ACCEPTANCE OF THE DELIVERY OF THIS DOCUMENT CONSTITUTES AGREEMENT TO THESE TERMS AND CONDITIONS.

SHAW'S AND USFILTER ENVIREX PRODUCTS' FLUIDIZED BED REACTOR TECHNOLOGY IS COVERED BY ONE OR MORE OF U.S. PATENT NOS. 5296200, 5296201, 5372712, 5411660, 5454938, 5538635, 5552052, 5584996, 5750028, 5766491, 5788842, 5976365, AND/OR PATENTS PENDING.

Shaw Environmental, Inc.
17 Princess Road
Lawrenceville, N.J. 08648
609-895-5340

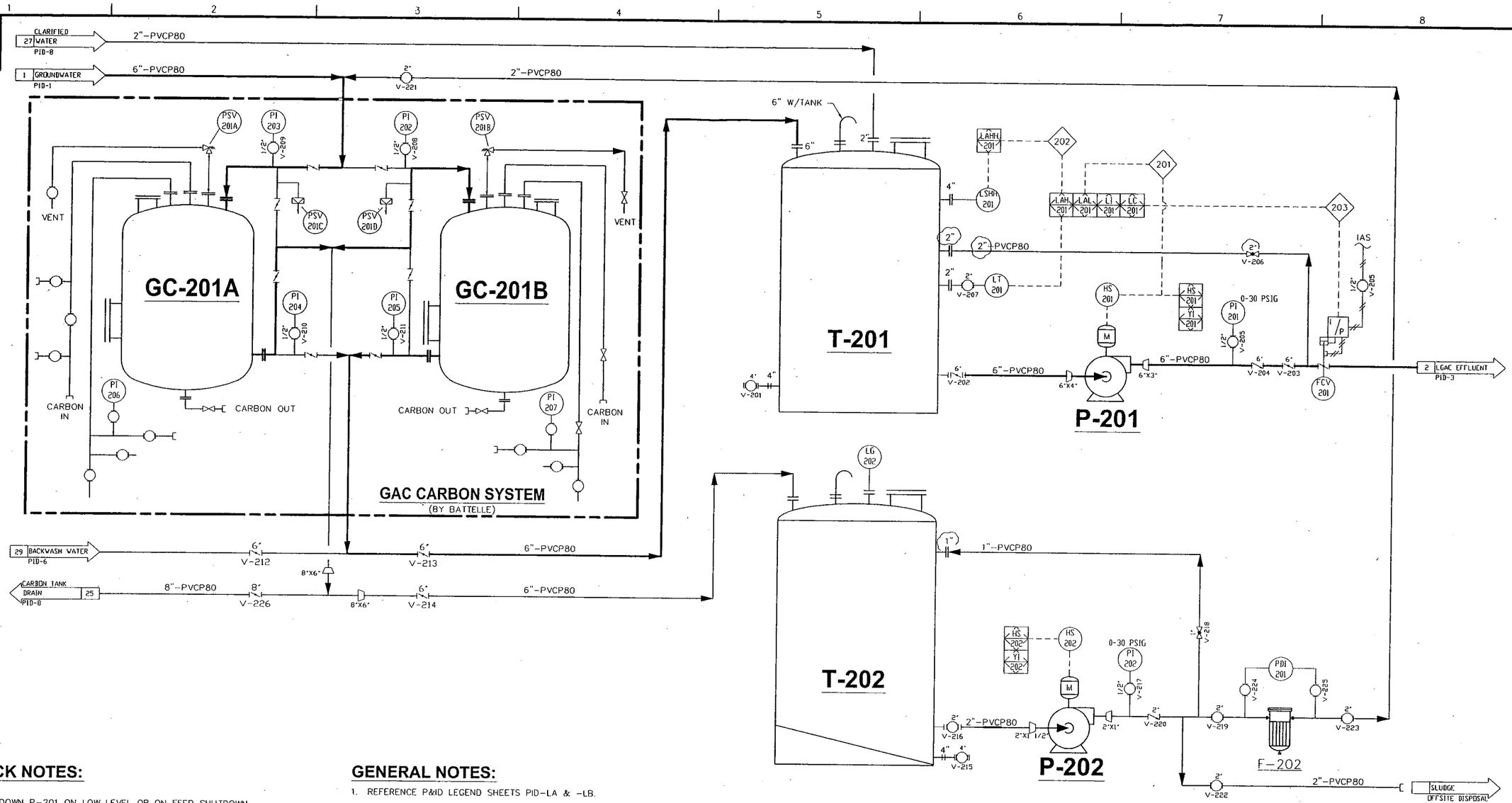

INTERLOCK NOTES:

1. 201 SHUTDOWN P-201 ON LOW LEVEL OR ON FEED SHUTDOWN.
2. 202 FEED SHUTDOWN ON HIGH OR HIGH HIGH LEVEL.
3. 203 VALVE POSITION CONTROLS T-201 LEVEL. VALVE CLOSES ON FEED SHUTDOWN.

GENERAL NOTES:

1. REFERENCE P&ID LEGEND SHEETS PID-LA & -LB.
2. EQUIPMENT, PIPING AND INSTRUMENTS SHOWN ON THIS P&ID ARE BATTELLE SCOPE OF WORK. EQUIPMENT IS SHOWN FOR PLC CONTROLS DESIGN ONLY. BATTELLE IS RESPONSIBLE FOR SELECTION OF ALL EQUIPMENT AND INSTRUMENTS SHOWN AND FOR SYSTEM DESIGN. BATTELLE SHALL ADVISE ANY CHANGES TO THIS P&ID BASED ON ACTUAL DESIGN.

CONSTRUCTION NOTE:

1. (1) INSTRUMENTS OR EQUIPMENT PROVIDED BY SHAW, SHIPPED LOOSE, AND FIELD INSTALLED. (NONE)

LAST VALVE#: 226

GC-201 A/B CARBON TANKS	T-201 FBR FEED TANK	T-202 GAC BACKWASH TANK	P-201 FBR FEED PUMP	P-202 GAC BACKWASH RETURN PUMP	F-202 GAC BACKWASH RETURN FILTER
DIM: 8'-0" DIA X 7'-0" STR CAPACITY: 10,000# CARBON MAT'L: LINED STEEL	DIM: 8'-6" DIA X 12'-8" TALL CAPACITY: 5,000 GAL. MAT'L: HDPE	DIM: 12'-0" DIA X 14'-6" TALL CAPACITY: 12,000 GAL. MAT'L: FRP	TYPE: CENTRIFUGAL CAPACITY: 350 G.P.M. @ 35' TDH MAT'L: CI/SS MODEL: 2196 3X4-8 MOTOR: 5 HP, 460/3/60	TYPE: CENTRIFUGAL CAPACITY: 20 G.P.M. @ 70' TDH MAT'L: CI/SS MODEL: 2196 LF 1X1 1/2"-8 MOTOR: 2 HP, 460/3/60	TYPE: BAG FILTER CAPACITY: 35 GPM MAT'L: 304 SS

REV	DATE	DESCRIPTION OF REVISION	REVISED BY	CHECKED
4	5-25-04	REVISED P-201/202 RECIRC PIPING	DL	KC
3	05-14-04	ADDED BUTTERFLY VALVE #226	LJ	SF
2	04-13-04	CHANGED CAPACITY OH F-202	LJ	SF
1	04-06-04	REVISED PER JPL COMMENTS & SHAW REVIEW	DAP	DH
0	2-25-04	REVISED PER BATTELLE AND SHAW REVIEW	LJ	

THIS IS A COMPUTER GENERATED DRAWING AND ONLY EDITS CONSISTENT WITH SHAW'S ORIGINAL CAD FORMAT SHALL BE CONSIDERED VALID COPIES.

NASA-JET PROPULSION LABORATORY
OU-1 TREATMENT SYSTEM, PASADENA, CA.

PIPING & INSTRUMENTATION DIAGRAM
GRANULAR ACTIVATED CARBON SYSTEM

SHAW PROJECT# 100770

DRAWING SCALE: N/A
DESIGNED BY/DATE: SF/10-23-03
DRAWN BY/DATE: LJ/10-29-03
CHECKED BY/DATE: HS
SHEET SIZE: D
REVISION: 4
SHEET 2 OF 8
DRAWING #: PID-2
FILE #: 100770PID02-4

USFilter
Envirex Products
Waukesha, WI 800-524-6324

ALL INFORMATION CONTAINED ON THIS DOCUMENT IS THE PROPERTY OF SHAW ENVIRONMENTAL, INC. ("SEI") AND/OR ITS AFFILIATES. THE DESIGN CONCEPTS AND INFORMATION CONTAINED HEREIN ARE PROPERTY OF SEI AND ARE SUBMITTED IN CONFIDENCE. THEY ARE NOT TRANSFERABLE, AND MUST BE USED ONLY FOR THE USE AND PROJECT FOR WHICH THE DOCUMENT IS EXPRESSLY SUBMITTED. THEY MUST NOT BE DISCLOSED, REPRODUCED, LOANED OR USED IN ANY OTHER MANNER WITHOUT THE EXPRESS WRITTEN CONSENT OF SEI. SEI ASSUMES NO RESPONSIBILITY OR LIABILITY FOR THE USE THIS DOCUMENT OR THE DESIGN CONCEPTS AND INFORMATION CONTAINED HEREIN FOR ANOTHER PROJECT, OR IN A MANNER THAT DOES NOT RELATE TO THE ORIGINALLY INTENDED USE OF THIS DOCUMENT. IN NO EVENT SHALL THIS DOCUMENT OR THE DESIGN CONCEPTS AND INFORMATION CONTAINED HEREIN BE USED IN ANY MANNER DETRIMENTAL TO THE INTEREST OF SEI. THE RIGHTS AND OBLIGATIONS OF SEI AND ITS CUSTOMER ARE FURTHER LIMITED IN THE AGREEMENT BETWEEN THEM FOR THIS PROJECT. ALL PATENT AND OTHER RIGHTS ARE RESERVED. ACCEPTANCE OF THE DELIVERY OF THIS DOCUMENT CONSTITUTES AGREEMENT TO THESE TERMS AND CONDITIONS.

SHAW'S AND USFILTER ENVIREX PRODUCTS' FLUIDIZED BED REACTOR TECHNOLOGY IS COVERED BY ONE OR MORE OF U.S. PATENT NOS. 5296200, 5296201, 5372712, 5411660, 5454938, 5538635, 5552052, 5584996, 5750028, 5766491, 5788842, 5976365, AND/OR PATENTS PENDING.

Shaw®
Shaw Environmental, Inc.
17 Princess Road
Lawrenceville, N.J. 08648
609-895-5340

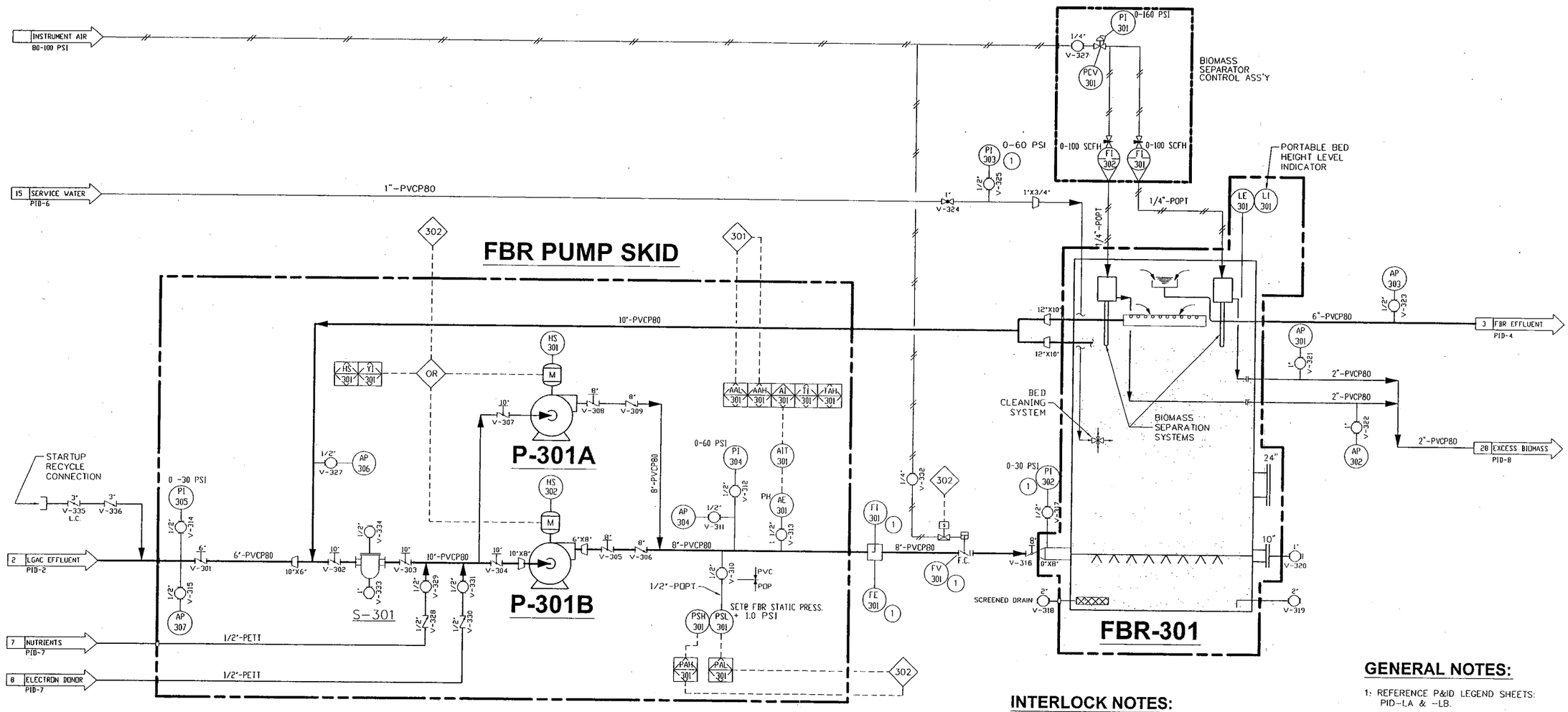

CONSTRUCTION NOTE:

1. (1) INSTRUMENTS OR EQUIPMENT PROVIDED BY SHAW, SHIPPED LOOSE, AND FIELD INSTALLED.

INTERLOCK NOTES:

1. (301) FEED SHUTDOWN (P-201) ON HIGH OR LOW PH.
2. (302) FBR SYSTEM SHUTDOWN ON LOW OR HIGH PRESSURE.

GENERAL NOTES:

1. REFERENCE P&ID LEGEND SHEETS: PID-LA & -LB.
2. EQUIPMENT SCOPE LIMIT: ITEMS WITHIN PACKAGE LINES ARE SUPPLIED BY SHAW. EQUIPMENT, PIPING AND INSTRUMENTATION OUTSIDE PACKAGE LINES ARE BY OTHERS UNLESS NOTED OTHERWISE.

LAST VALVE # 336

FBR-301 FLUID BED REACTOR TANK	P-301 A/B FLUIDIZATION PUMPS	S-301 STRAINER
DIMENSION: 11'-6"DIA. X 24'HG. CAPACITY: 18,000 GAL MAT'L: 304 STAINLESS STEEL MEDIA: ACTIVATED CARBON	TYPE: CENTRIFUGAL CAPACITY: 1300 GPM @ 42' TDH MAT'L: STAINLESS STEEL MOTOR: 20HP, 3ø, 60HZ, 460 VAC, 1200RPM, TEFC, MILL & CHEM DUTY	TYPE: SIMPLEX TEE STRAINER SCREEN: 1/8" PERFORATION MAT'L: 304 STAINLESS STEEL BODY, 316 STAINLESS STEEL SCREEN

REV	DATE	DESCRIPTION OF REVISION	REVISED BY	CHECKED
5	5-25-04	NO CHANGES	DL	KC
4	05-14-04	MOVE INTERLOCKS OFF OF FBR PUMP SKID	LJ	KC
3	04-06-04	REVISED PER JPL COMMENTS & SHAW REVIEW	LJ	DW
2	2-25-04	REVISED PER BATTELLE AND SHAW REVIEW	LJ	
1	02-06-04	INCORPORATED BATTELLE COMMENTS	LJ	SF

THIS IS A COMPUTER GENERATED DRAWING AND ONLY EDITS CONSISTENT WITH SHAW'S ORIGINAL CAD FORMAT SHALL BE CONSIDERED VALID COPIES.

USFilter
Envirex Products
Waukesha, WI 800-524-6324

ALL INFORMATION CONTAINED ON THIS DOCUMENT IS THE PROPERTY OF SHAW ENVIRONMENTAL, INC. ("SEI") AND/OR ITS AFFILIATES. THE DESIGN CONCEPTS AND INFORMATION CONTAINED HEREIN ARE PROPERTY OF SEI AND ARE SUBMITTED IN CONFIDENCE. THEY ARE NOT TRANSFERABLE AND MUST BE USED ONLY FOR THE USE AND PROJECT FOR WHICH THE DOCUMENT IS EXPRESSLY SUBMITTED. THEY MUST NOT BE DISCLOSED, REPRODUCED, LOANED OR USED IN ANY OTHER MANNER WITHOUT THE EXPRESS WRITTEN CONSENT OF SEI. SEI ASSUMES NO RESPONSIBILITY OR LIABILITY FOR THE USE THIS DOCUMENT OF THE DESIGN CONCEPTS AND INFORMATION CONTAINED HEREIN FOR ANOTHER PROJECT, OR IN A MANNER THAT DOES NOT RELATE TO THE ORIGINALLY INTENDED USE OF THIS DOCUMENT. IN NO EVENT SHALL THIS DOCUMENT OR THE DESIGN CONCEPTS AND INFORMATION CONTAINED HEREIN BE USED IN ANY MANNER DETRIMENTAL TO THE INTEREST OF SEI. THE RIGHTS AND OBLIGATIONS OF SEI AND ITS CUSTOMER ARE FURTHER LIMITED IN THE AGREEMENT BETWEEN THEM FOR THIS PROJECT. ALL PATENT AND OTHER RIGHTS ARE RESERVED. ACCEPTANCE OF THE DELIVERY OF THIS DOCUMENT CONSTITUTES AGREEMENT TO THESE TERMS AND CONDITIONS.

SHAW'S AND USFILTER ENVIREX PRODUCTS' FLUIDIZED BED REACTOR TECHNOLOGY IS COVERED BY ONE OR MORE OF U.S. PATENT NOS. 5296200, 5296201, 5372712, 5411660, 5454938, 5538635, 5552052, 5584996, 5750028, 5766491, 5788842, 5976365, AND/OR PATENTS PENDING.

Shaw®
Shaw Environmental, Inc.
17 Princess Road
Lawrenceville, N.J. 08648
609-895-5340

NASA-JET PROPULSION LABORATORY
OU-1 TREATMENT SYSTEM, PASADENA, CA

PIPING & INSTRUMENTATION DIAGRAM
FLUID BED REACTOR SYSTEM

SHAW PROJECT# 100770

DRAWING SCALE	N/A
DESIGNED BY/DATE	SF/10-29-03
DRAWN BY/DATE	LJ/10-29-03
CHECKED BY/DATE	HS/10-29-03
SHEET SIZE	D
REVISION	4
SHEET 3 OF 8	
DRAWING #	PID-3
FILE #	100770PID03-4

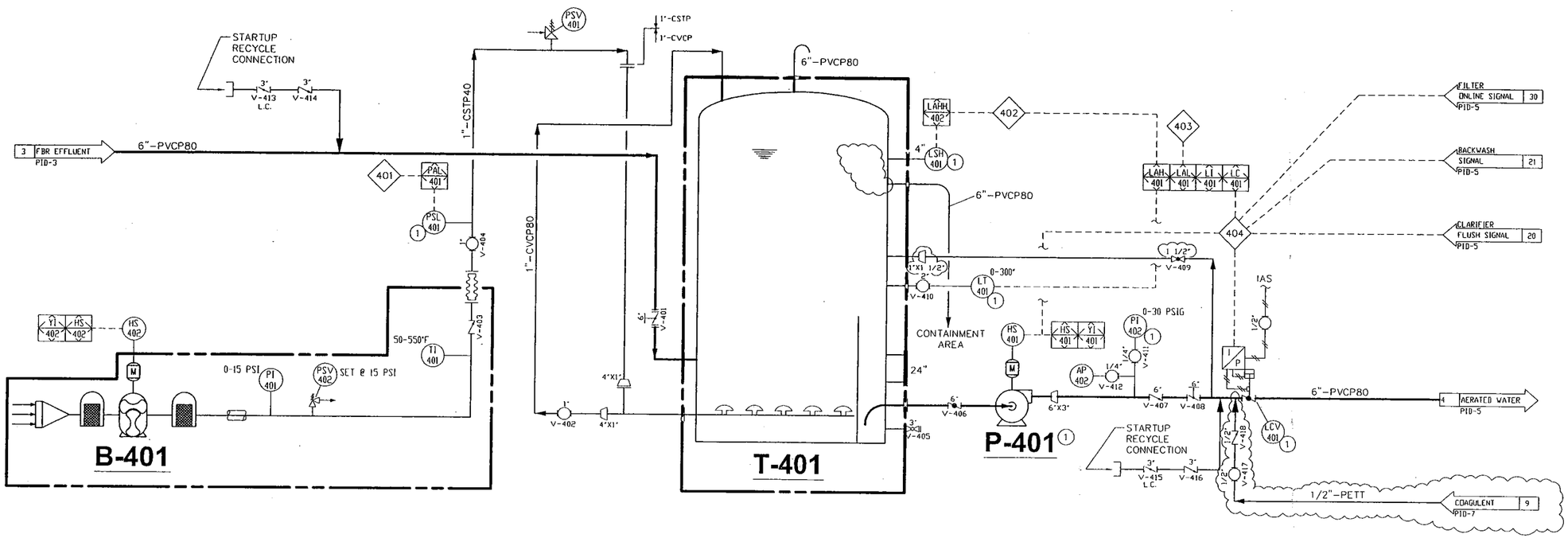

INTERLOCK NOTES:

1. 401 — LOW BLOWER DISCHARGE PRESSURE, CAUSES B-401 SHUTDOWN & FEED SHUTDOWN.
2. 402 — FEED SHUTDOWN ON HIGH OR HIGH HIGH LEVEL.
3. 403 — LOW LEVEL SHUTS DOWN P-401 & CLOSES LCV-401.
4. 404 — VALVE POSITION CONTROLS T-401 LEVEL. DURING FILTER BACKWASH OR APPLICABLE FILTER ALARM VALVE IS CLOSED. DURING CLARIFIER FLUSH VALVE POSITION IS SET FOR CLARIFIER FLUSH FLOW. DURING FEED SHUTDOWN CONDITION LCV-401 IS CLOSED AND P-401 IS SHUTDOWN.

GENERAL NOTES:

1. REFERENCE P&ID LEGEND SHEETS PID-LA & -LB.
2. EQUIPMENT SCOPE LIMIT: ITEMS WITHIN PACKAGE LINES ARE SUPPLIED BY SHAW. EQUIPMENT, PIPING AND INSTRUMENTATION OUTSIDE PACKAGE LINES ARE BY OTHERS UNLESS NOTED OTHERWISE.

CONSTRUCTION NOTE:

1. (1) INSTRUMENTS OR EQUIPMENT PROVIDED BY SHAW, SHIPPED LOOSE, AND FIELD INSTALLED.

LAST VALVE # USED V-418

T-401 AERATION TANK	P-401 FILTER INFLUENT PUMP	B-401 AIR BLOWER
DIMENSIONS: 9'DIA X 20'STR. CAPACITY: 9300 GAL. MAT'L: 304 STAINLESS STEEL	TYPE: CENTRIFUGAL CAPACITY: 350 GPM @ 34'TDH MOTOR: 7.5HP 460/3/60 MODEL: SULZER 6X3-8	TYPE: ROTARY POSITIVE DISPLACEMENT CAPACITY: 25 SCFM @ 10 PSIG MOTOR: 3HP 460/3/60

REV	DATE	DESCRIPTION OF REVISION	REVISED BY	CHECKED
3	3-25-04	MOVED COAGULENT, REVISED P-401 RE:ORC MPMC	DL	KC
2	05-14-04	DELETE INTERLOCK #05	LJ	DW
1	05-14-04	CHANGED THE TEMPERATURE GAUAGE ON INSTRUMENT TI-401, REVISED THE FLAG SIGNAL TO ONLINE	LJ	DW
0	04-06-04	REVISED PER JPL COMMENTS & SHAW REVIEW	LJ	DW
A	2-25-04	REVISE PER BATTELLE AND SHAW REVIEW	LJ	

THIS IS A COMPUTER GENERATED DRAWING AND ONLY EDITS CONSISTENT WITH SHAW'S ORIGINAL CAD FORMAT SHALL BE CONSIDERED VALID COPIES.

USFilter
Envirex Products
Waukesha, WI 800-524-6324

ALL INFORMATION CONTAINED ON THIS DOCUMENT IS THE PROPERTY OF SHAW ENVIRONMENTAL, INC. ("SEI") AND/OR ITS AFFILIATES. THE DESIGN CONCEPTS AND INFORMATION CONTAINED HEREIN ARE PROPERTY OF SEI AND ARE SUBMITTED IN CONFIDENCE. THEY ARE NOT TRANSFERABLE AND MUST BE USED ONLY FOR THE USE AND PROJECT FOR WHICH THE DOCUMENT IS EXPRESSLY SUBMITTED. THEY MUST NOT BE DISCLOSED, REPRODUCED, LOANED OR USED IN ANY OTHER MANNER WITHOUT THE EXPRESS WRITTEN CONSENT OF SEI. SEI ASSUMES NO RESPONSIBILITY OR LIABILITY FOR THE USE THIS DOCUMENT OR THE DESIGN CONCEPTS AND INFORMATION CONTAINED HEREIN FOR ANOTHER PROJECT, OR IN A MANNER THAT DOES NOT RELATE TO THE ORIGINALLY INTENDED USE OF THIS DOCUMENT. IN NO EVENT SHALL THIS DOCUMENT OR THE DESIGN CONCEPTS AND INFORMATION CONTAINED HEREIN BE USED IN ANY MANNER DETRIMENTAL TO THE INTEREST OF SEI. THE RIGHTS AND OBLIGATIONS OF SEI AND ITS CUSTOMER ARE FURTHER LIMITED IN THE AGREEMENT BETWEEN THEM FOR THIS PROJECT. ALL PATENT AND OTHER RIGHTS ARE RESERVED. ACCEPTANCE OF THE DELIVERY OF THIS DOCUMENT CONSTITUTES AGREEMENT TO THESE TERMS AND CONDITIONS.

SHAW'S AND USFILTER ENVIREX PRODUCTS' FLUIDIZED BED REACTOR TECHNOLOGY IS COVERED BY ONE OR MORE OF U.S. PATENT NOS. 5296200, 5296201, 5372712, 5411660, 5454938, 5538635, 5552052, 5584996, 5750028, 5766491, 5788842, 5976365, AND/OR PATENTS PENDING.

Shaw®
Shaw Environmental, Inc.
17 Princess Road
Lawrenceville, N.J. 08648
609-895-5340

NASA-JET PROPULSION LABORATORY
OU-1 TREATMENT SYSTEM, PASADENA, CA.

PIPING & INSTRUMENTATION DIAGRAM
AERATION TANK

SHAW PROJECT# 100770

DRAWING SCALE	N/A
DESIGNED BY/DATE	SF/11-11-03
DRAWN BY/DATE	LJ/11-12-03
CHECKED BY/DATE	HS/11-12-03
SHEET SIZE	D
REVISION	4
SHEET 4 OF 8	
DRAWING #	PID-4
FILE #	1007700PID04-4

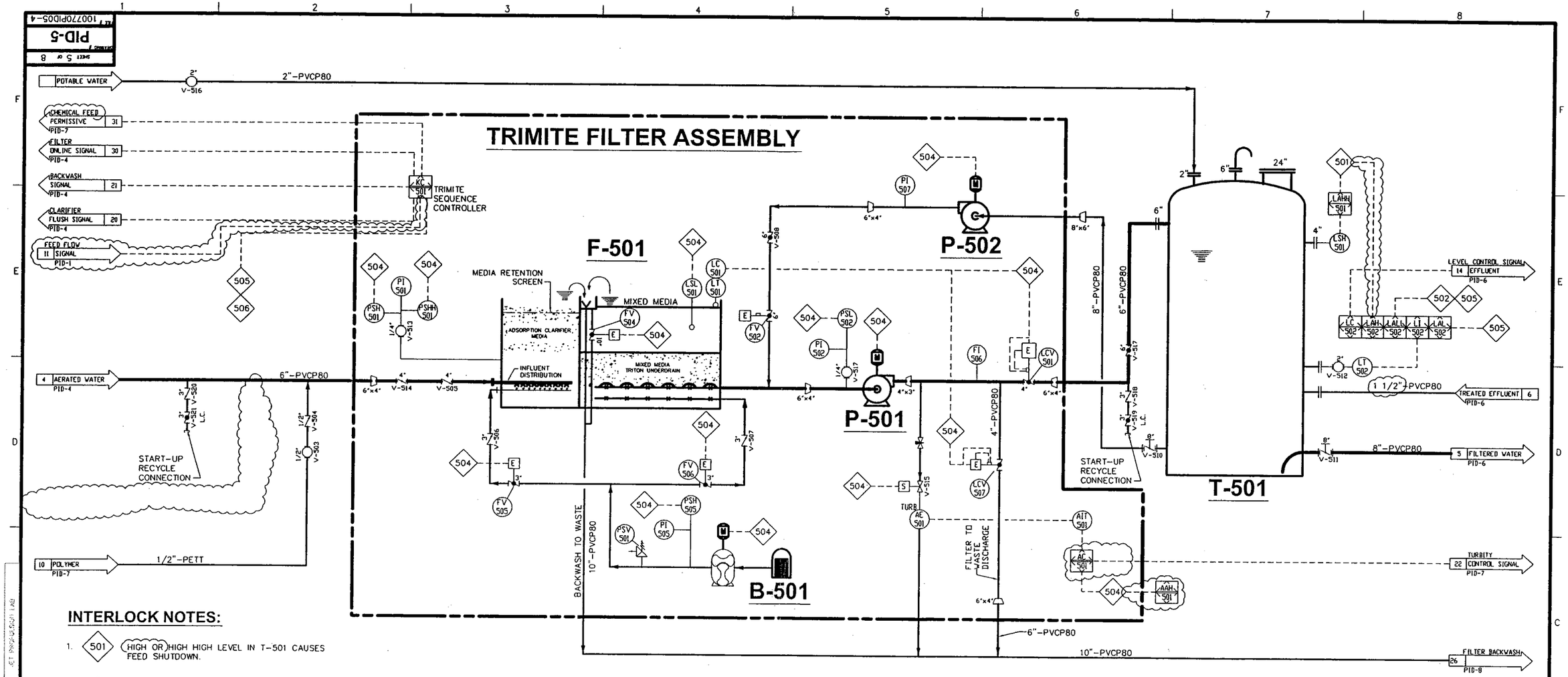

INTERLOCK NOTES:

1. 501 — HIGH OR HIGH HIGH LEVEL IN T-501 CAUSES FEED SHUTDOWN.
2. 502 — LOW LOW LEVEL IN T-501 DISABLES TRIMITE OPERATION, CAUSES P-601 TO SHUTDOWN, LCV-601 TO CLOSE AND CAUSES A FEED SHUT DOWN.
3. 504 — VALVE AND EQUIPMENT SEQUENCE CONTROLLED BY TRIMITE PLC.
4. 505 — FILTER BACKWASH IS NOT INITIATED UNLESS T-501 LEVEL ABOVE LAL-502 OR T-801 HIGH LEVEL.
5. 506 — FILTER OPERATION IS DISABLED ON FEED SHUTDOWN.

CONSTRUCTION NOTE:

1. (1) INSTRUMENTS OR EQUIPMENT PROVIDED BY SHAW, SHIPPED LOOSE, AND FIELD INSTALLED.

GENERAL NOTES:

1. REFERENCE P&ID LEGEND SHEETS PID-LA & -LB.
2. EQUIPMENT SCOPE LIMIT:
   ITEMS WITHIN PACKAGE LINES ARE SUPPLIED BY SHAW. EQUIPMENT, PIPING AND INSTRUMENTATION OUTSIDE PACKAGE LINES ARE BY OTHERS UNLESS NOTED OTHERWISE.

LAST VALVE#: 517 (501 & 502 NOT USED)

T-501 FILTER EFFLUENT/ BACKWASH TANK	F-501 TRIMITE FILTER	P-501 FILTER EFFLUENT PUMP	P-502 FILTER BACKWASH PUMP	B-501 TRIMITE AIR BLOWER
DIMENSION: 11'-9"DIA X 13'-4" HIGH CAPACITY: 10,000 GAL. MAT'L: HDPE	DIMENSION: 7'WIDE X 20' LONG X 7'-6" HIGH CAPACITY: MAT'L: LINED CARBON STEEL MEDIA:	TYPE: CENTRIFUGAL CAPACITY: 350 GPM @ 62' TDH MAT'L: MOTOR: 7.5 HP, 460/3/60 TEFC	TYPE: CENTRIFUGAL CAPACITY: 1050 GPM @ 44' TDH MAT'L: MOTOR: 25HP, 460/3/60 TEFC	TYPE: REGENERATIVE CAPACITY: 150 SCFM @ 4.1 PSIG MOTOR: 7.5 HP, 1800 RPM, 60 HZ 230/480V 3 pH, TEFC.

REV	DATE	DESCRIPTION OF REVISION	REVISED BY	CHECKED
4	5-23-04	REVISED FILTER CONTROLS, P-501 RECIRC PIPING	DL	KC
3	05-14-04	REVISE TRIMITE FILTER PIPING	LJ	RL
2	04-06-04	REVISED PER JPL COMMENTS & SHAW REVIEW	DAP	DW
1	2-23-04	REVISED PER BATTELLE AND SHAW REVIEW	LJ	
0	02-06-04	INCORPORATED BATTELLE COMMENTS	LJ	SF

THIS IS A COMPUTER GENERATED DRAWING AND ONLY EDITS CONSISTENT WITH SHAW'S ORIGINAL CAD FORMAT SHALL BE CONSIDERED VALID COPIES.

DRAWING SCALE: NONE
DESIGNED BY/DATE: SF/
DRAWN BY/DATE: LJ/11-12-03
CHECKED BY/DATE: HS/
SHEET SIZE: D
REVISION: 4
SHEET 5 OF 8
DRAWING #: PID-5
JPL # 100770PID05-4

NASA-JET PROPULSION LABORATORY
OU-1 TREATMENT SYSTEM, PASADENA, CA

PIPING & INSTRUMENTATION DIAGRAM
TRIMITE FILTER SYSTEM

SHAW PROJECT# 100770

USFilter
Envirex Products
Waukesha, WI 800-524-6324

ALL INFORMATION CONTAINED ON THIS DOCUMENT IS THE PROPERTY OF SHAW ENVIRONMENTAL, INC. ("SEI") AND/OR ITS AFFILIATES. THE DESIGN CONCEPTS AND INFORMATION CONTAINED HEREIN ARE PROPERTY OF SEI AND ARE SUBMITTED IN CONFIDENCE. THEY ARE NOT TRANSFERABLE AND MUST BE USED ONLY FOR THE USE AND PROJECT FOR WHICH THE DOCUMENT IS EXPRESSLY SUBMITTED. THEY MUST NOT BE DISCLOSED, REPRODUCED, LOANED OR USED IN ANY OTHER MANNER WITHOUT THE EXPRESS WRITTEN CONSENT OF SEI. SEI ASSUMES NO RESPONSIBILITY OR LIABILITY FOR THE USE THIS DOCUMENT OR THE DESIGN CONCEPTS AND INFORMATION CONTAINED HEREIN FOR ANOTHER PROJECT, OR IN A MANNER THAT DOES NOT RELATE TO THE ORIGINALLY INTENDED USE OF THIS DOCUMENT. IN NO EVENT SHALL THIS DOCUMENT OR THE DESIGN CONCEPTS AND INFORMATION CONTAINED HEREIN BE USED IN ANY MANNER DETRIMENTAL TO THE INTEREST OF SEI. THE RIGHTS AND OBLIGATIONS OF SEI AND ITS CUSTOMER ARE FURTHER LIMITED IN THE AGREEMENT BETWEEN THEM FOR THIS PROJECT. ALL PATENT AND OTHER RIGHTS ARE RESERVED. ACCEPTANCE OF THE DELIVERY OF THIS DOCUMENT CONSTITUTES AGREEMENT TO THESE TERMS AND CONDITIONS.

SHAW'S AND USFILTER ENVIREX PRODUCTS' FLUIDIZED BED REACTOR TECHNOLOGY IS COVERED BY ONE OR MORE OF U.S. PATENT NOS. 5296200, 5296201, 5372712, 5411660, 5454938, 5538635, 5552052, 5584996, 5750028, 5766491, 5788842, 5976365, AND/OR PATENTS PENDING.

Shaw®
Shaw Environmental, Inc.
17 Princess Road
Lawrenceville, N.J. 08648
609-895-5340

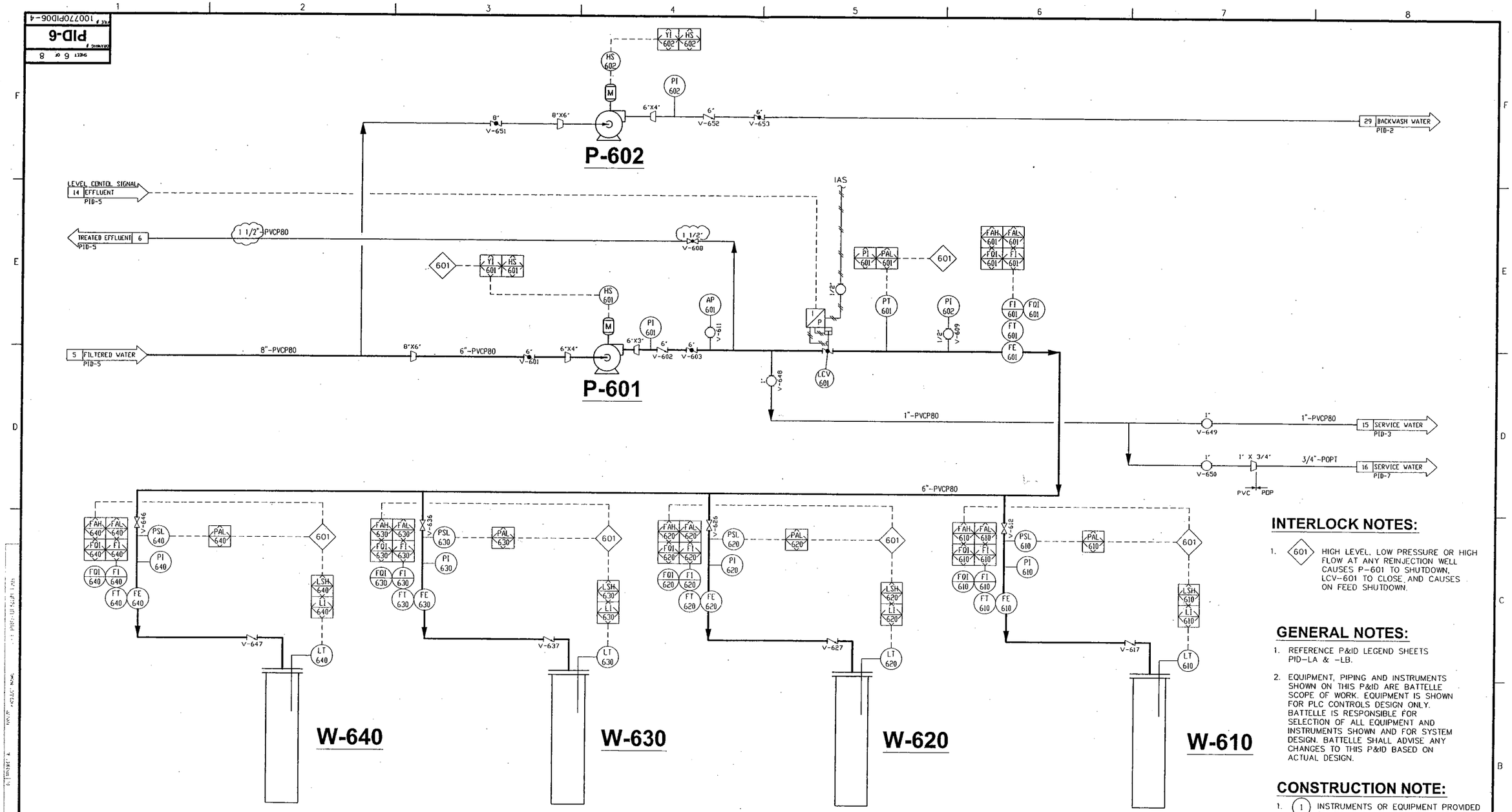

INTERLOCK NOTES:

1. 601 HIGH LEVEL, LOW PRESSURE OR HIGH FLOW AT ANY REINJECTION WELL CAUSES P-601 TO SHUTDOWN, LCV-601 TO CLOSE, AND CAUSES ON FEED SHUTDOWN.

GENERAL NOTES:

1. REFERENCE P&ID LEGEND SHEETS PID-LA & -LB.
2. EQUIPMENT, PIPING AND INSTRUMENTS SHOWN ON THIS P&ID ARE BATTELLE SCOPE OF WORK. EQUIPMENT IS SHOWN FOR PLC CONTROLS DESIGN ONLY. BATTELLE IS RESPONSIBLE FOR SELECTION OF ALL EQUIPMENT AND INSTRUMENTS SHOWN AND FOR SYSTEM DESIGN. BATTELLE SHALL ADVISE ANY CHANGES TO THIS P&ID BASED ON ACTUAL DESIGN.

CONSTRUCTION NOTE:

1. (1) INSTRUMENTS OR EQUIPMENT PROVIDED BY SHAW, SHIPPED LOOSE, AND FIELD INSTALLED.

REINJECTION WELLS

LAST VALVE # USED V-653

P-601 REINJECTION PUMP	P-602 GAC BACKWASH PUMP		W-610/620/630/640 REINJECTION WELLS					
TYPE: CENTRIFUGAL CAPACITY: 350 GPM @ 88' TDH WETTED MAT'L: CAST IRON MOTOR: 15 HP, 460V, 3pH, 60HZ MODEL: 3X4-10	TYPE: CENTRIFUGAL CAPACITY: 780 GPM @ 70' TDH MOTOR: 25 HP, 460V, 3pH, 60HZ MODEL: 4X6-10 MAT'L: CI/SS							

REV	DATE	DESCRIPTION OF REVISION	REVISED BY	CHECKED
5	5-25-04	REVISED P-601 RECIRC PIPING	GL	KC
4	04-06-04	REVISED PER JPL COMMENT & SHAW REVISE	LJ	DW
3	02-23-04	REVISED PER BATTELLE AND SHAW REVIEW	LJ	
2	02-06-04	INCORPORATED BATTELLE COMMENTS	LJ	SF
1	01-26-04	ISSUED FOR CONSTRUCTION	DAP	HS/RL

THIS IS A COMPUTER GENERATED DRAWING AND ONLY EDITS CONSISTENT WITH SHAW'S ORIGINAL CAD FORMAT SHALL BE CONSIDERED VALID COPIES.

USFilter
Envirex Products
Waukesha, WI 800-524-6324

ALL INFORMATION CONTAINED ON THIS DOCUMENT IS THE PROPERTY OF SHAW ENVIRONMENTAL, INC. ("SEI") AND/OR ITS AFFILIATES. THE DESIGN CONCEPTS AND INFORMATION CONTAINED HEREIN ARE PROPERTY OF SEI AND ARE SUBMITTED IN CONFIDENCE. THEY ARE NOT TRANSFERABLE AND MUST BE USED ONLY FOR THE USE AND PROJECT FOR WHICH THE DOCUMENT IS EXPRESSLY SUBMITTED. THEY MUST NOT BE DISCLOSED, REPRODUCED, LOANED OR USED IN ANY OTHER MANNER WITHOUT THE EXPRESS WRITTEN CONSENT OF SEI. SEI ASSUMES NO RESPONSIBILITY OR LIABILITY FOR THE USE THIS DOCUMENT OR THE DESIGN CONCEPTS AND INFORMATION CONTAINED HEREIN FOR ANOTHER PROJECT, OR IN A MANNER THAT DOES NOT RELATE TO THE ORIGINALLY INTENDED USE OF THIS DOCUMENT. IN NO EVENT SHALL THIS DOCUMENT OR THE DESIGN CONCEPTS AND INFORMATION CONTAINED HEREIN BE USED IN ANY MANNER DETRIMENTAL TO THE INTEREST OF SEI. THE RIGHTS AND OBLIGATIONS OF SEI AND ITS CUSTOMER ARE FURTHER LIMITED IN THE AGREEMENT BETWEEN THEM FOR THIS PROJECT. ALL PATENT AND OTHER RIGHTS ARE RESERVED. ACCEPTANCE OF THE DELIVERY OF THIS DOCUMENT CONSTITUTES AGREEMENT TO THESE TERMS AND CONDITIONS.

SHAW'S AND USFILTER ENVIREX PRODUCTS' FLUIDIZED BED REACTOR TECHNOLOGY IS COVERED BY ONE OR MORE OF U.S. PATENT NOS. 5296200, 5296201, 5372712, 5411660, 5454938, 5538635, 5552052, 5584996, 5750028, 5766491, 5788842, 5976365, AND/OR PATENTS PENDING.

Shaw®
Shaw Environmental, Inc.
17 Princess Road
Lawrenceville, N.J. 08648
609-895-5340

NASA-JET PROPULSION LABORATORY
OU-1 TREATMENT SYSTEM, PASADENA, CA.

PIPING & INSTRUMENTATION DIAGRAM
REINJECTION WELLS

SHAW PROJECT# 100770

DRAWING SCALE	N/A
DESIGNED BY/DATE	SF/11-11-03
DRAWN BY/DATE	LJ/11-12-03
CHECKED BY/DATE	HS'11-12-03
SHEET SIZE	D
REVISION	4
SHEET	6 of 8
DRAWING #	PID-6
FILE #	100770PID06-4

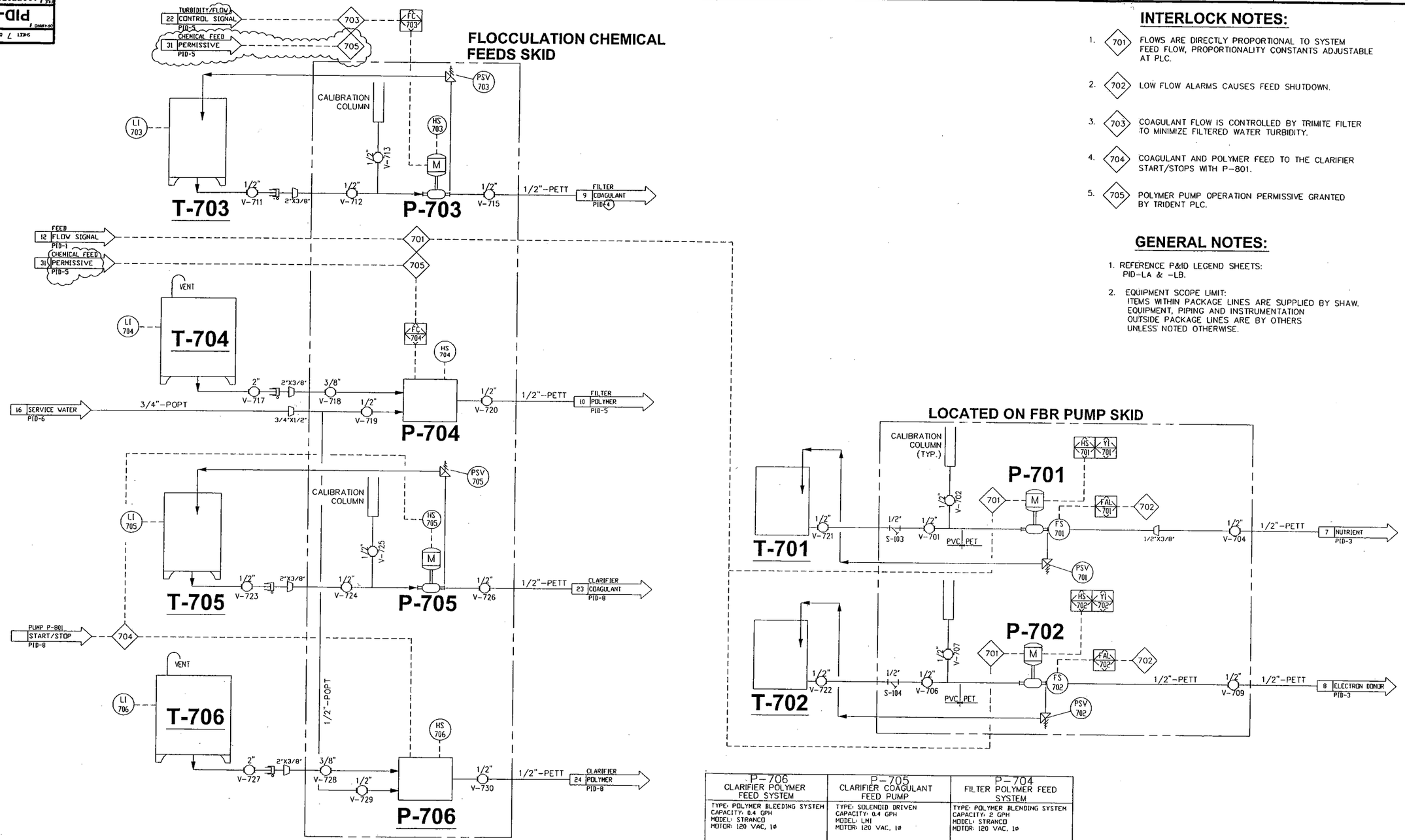

INTERLOCK NOTES:

1. 701 FLOWS ARE DIRECTLY PROPORTIONAL TO SYSTEM FEED FLOW, PROPORTIONALITY CONSTANTS ADJUSTABLE AT PLC.
2. 702 LOW FLOW ALARMS CAUSES FEED SHUTDOWN.
3. 703 COAGULANT FLOW IS CONTROLLED BY TRIMITE FILTER TO MINIMIZE FILTERED WATER TURBIDITY.
4. 704 COAGULANT AND POLYMER FEED TO THE CLARIFIER START/STOPS WITH P-801.
5. 705 POLYMER PUMP OPERATION PERMISSIVE GRANTED BY TRIDENT PLC.

GENERAL NOTES:

1. REFERENCE P&ID LEGEND SHEETS: PID-LA & -LB.
2. EQUIPMENT SCOPE LIMIT: ITEMS WITHIN PACKAGE LINES ARE SUPPLIED BY SHAW. EQUIPMENT, PIPING AND INSTRUMENTATION OUTSIDE PACKAGE LINES ARE BY OTHERS UNLESS NOTED OTHERWISE.

P-706 CLARIFIER POLYMER FEED SYSTEM	P-705 CLARIFIER COAGULANT FEED PUMP	P-704 FILTER POLYMER FEED SYSTEM
TYPE: POLYMER BLEEDING SYSTEM CAPACITY: 0.4 GPH MODEL: STRANCO MOTOR: 120 VAC, 1ø	TYPE: SOLENOID DRIVEN CAPACITY: 0.4 GPH MODEL: LMI MOTOR: 120 VAC, 1ø	TYPE: POLYMER BLENDING SYSTEM CAPACITY: 2 GPH MODEL: STRANCO MOTOR: 120 VAC, 1ø

LAST VALVE# : 730

T-701 NUTRIENT TANK	T-702 ELECTRON DONOR TANK	T-703 COAGULANT TOTE	T-704 FILTER POLYMER TANK	T-705 COAGULANT TOTE	T-706 POLYMER TANK	P-701 NUTRIENT PUMP	P-702 ELECTRON DONOR PUMP	P-703 FILTER COAGULANT FEED PUMP
(BY OTHERS)	(BY OTHERS)	(BY OTHERS)	(BY OTHERS)	(BY OTHERS) MAY BE COMBINED WITH T-703	(BY OTHERS) MAY BE COMBINED WITH T-704	TYPE: DIAPHRAGM CAPACITY: 1 GPH MODEL: LMI MOTOR: 120V, 1ø	TYPE: DIAPHRAGM CAPACITY: 8 GPH MODEL: LMI MOTOR: 120V, 1ø	TYPE: SOLENOID DRIVEN CAPACITY: 8 GPH MODEL: LMI MOTOR: 120 VAC, 1ø

REV	DATE	DESCRIPTION OF REVISION	REVISED BY	CHECKED
5	5-25-04	REVISED FILTER CHEM FEED CONTROL	DL	KC
4	04-06-04	REVISED PER JPL COMMENT & SHAW REVIEW	LJ	DW
3	02-25-04	REVISED PER BATTELLE AND SHAW REVIEW	LJ	
2	02-06-04	INCORPORATED BATTELLE COMMENTS	LJ	SF
1	1-26-04	ISSUED FOR CONSTRUCTION	DAP	HS

THIS IS A COMPUTER GENERATED DRAWING AND ONLY EDITS CONSISTENT WITH SHAW'S ORIGINAL CAD FORMAT SHALL BE CONSIDERED VALID COPIES.

NASA-JET PROPULSION LABORATORY
OU-1 TREATMENT SYSTEM, PASADENA, CA.

PIPING & INSTRUMENTATION DIAGRAM
CHEMICAL FEED SYSTEMS

SHAW PROJECT# 100770

DRAWING SCALE: N/A
DESIGNED BY/DATE: SF
DRAWN BY/DATE: LJ/11-13-03
CHECKED BY/DATE: HS/1-21-04
SHEET SIZE: D
REVISION: 4
SHEET 7 OF 8
DRAWING #: PID-7
FILE #: 100770PID07-4

USFilter
Envirex Products
Waukesha, WI 800-524-6324

ALL INFORMATION CONTAINED ON THIS DOCUMENT IS THE PROPERTY OF SHAW ENVIRONMENTAL, INC. ("SEI") AND/OR ITS AFFILIATES. THE DESIGN CONCEPTS AND INFORMATION CONTAINED HEREIN ARE PROPERTY OF SEI AND ARE SUBMITTED IN CONFIDENCE. THEY ARE NOT TRANSFERABLE AND MUST BE USED ONLY FOR THE USE AND PROJECT FOR WHICH THE DOCUMENT IS EXPRESSLY SUBMITTED. THEY MUST NOT BE DISCLOSED, REPRODUCED, LOANED OR USED IN ANY OTHER MANNER WITHOUT THE EXPRESS WRITTEN CONSENT OF SEI. SEI ASSUMES NO RESPONSIBILITY OR LIABILITY FOR THE USE THIS DOCUMENT OR THE DESIGN CONCEPTS AND INFORMATION CONTAINED HEREIN FOR ANOTHER PROJECT, OR IN A MANNER THAT DOES NOT RELATE TO THE ORIGINALLY INTENDED USE OF THIS DOCUMENT. IN NO EVENT SHALL THIS DOCUMENT OR THE DESIGN CONCEPTS AND INFORMATION CONTAINED HEREIN BE USED IN ANY MANNER DETRIMENTAL TO THE INTEREST OF SEI. THE RIGHTS AND OBLIGATIONS OF SEI AND ITS CUSTOMER ARE FURTHER LIMITED IN THE AGREEMENT BETWEEN THEM FOR THIS PROJECT. ALL PATENT AND OTHER RIGHTS ARE RESERVED. ACCEPTANCE OF THE DELIVERY OF THIS DOCUMENT CONSTITUTES AGREEMENT TO THESE TERMS AND CONDITIONS.

SHAW'S AND USFILTER ENVIREX PRODUCTS' FLUIDIZED BED REACTOR TECHNOLOGY IS COVERED BY ONE OR MORE OF U.S. PATENT NOS. 5296200, 5296201, 5372712, 5411660, 5454938, 5538635, 5552052, 5584996, 5750028, 5766491, 5788842, 5976365, AND/OR PATENTS PENDING.

Shaw Environmental, Inc.
17 Princess Road
Lawrenceville, N.J. 08648
609-895-5340

LAST EDITED: 5-25-04 @ LAWRENCEVILLE, NJ
OPERATOR: DEMARTIS
QL PROJECT #: 100770
PROJECT NAME: JET PROPULSION LAB

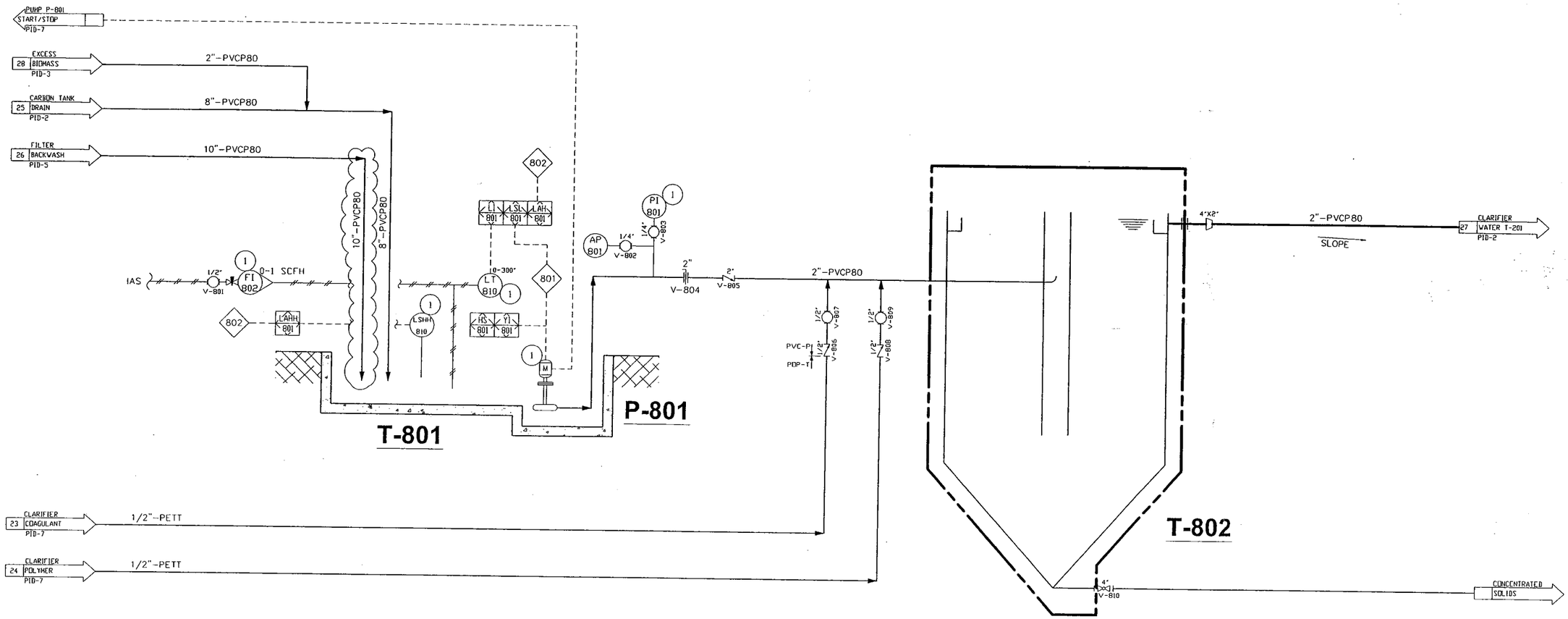

INTERLOCK NOTES:

1. 801 — P-801 WILL RUN WHEN LEVEL IS ABOVE LSL-801
2. 802 — SHUTDOWN BACKWASH OF TRIMITE FILTER AND FEED SHUTDOWN.

CONSTRUCTION NOTE:

1. (1) INSTRUMENTS OR EQUIPMENT PROVIDED BY SHAW, SHIPPED LOOSE, AND FIELD INSTALLED.

GENERAL NOTES:

1. REFERENCE P&ID LEGEND SHEETS PID-LA & -LB.
2. EQUIPMENT SCOPE LIMIT:
   ITEMS WITHIN PACKAGE LINES ARE SUPPLIED BY SHAW.
3. EQUIPMENT, PIPING AND INSTRUMENTATION OUTSIDE PACKAGE LINES ARE BY OTHERS UNLESS NOTED OTHERWISE.

T-801 BACKWASH HOLDING SUMP	T-802 CLARIFIER	P-801 BACKWASH SUBMERSIBLE PUMP						
SIZE: 12' X 24' X 14' MAX. DEPTH TYPE: IN-GROUND CONCRETE BASIN CAPACITY: 25,000 GAL.	SIZE: 12' DIA. X 20'-3" OAH WITH 60 DEG. CONE BOTTOM MAT'L: 304 SS CAPACITY:	TYPE: SUBMERSIBLE CAPACITY: 25 GPM @ 40 FT. TDH MAT'L: 304 SS ELEC: 1.5 HP, 460 VAC, 3ø, 60 HZ						

LAST VALVE# : 810

REV	DATE	DESCRIPTION OF REVISION	REVISED BY	CHECKED
4	5-25-04	NO CHANGES	DL	KC
3	5-14-040	ADJUST T-801 PIPING	LJ	RL
2	04-06-04	REVISED PER JPL COMMENT & SHAW REVISED	LJ	DW
1	02-25-04	ISSUED FOR APPROVAL	LJ	SF

THIS IS A COMPUTER GENERATED DRAWING AND ONLY EDITS CONSISTENT WITH SHAW'S ORIGINAL CAD FORMAT SHALL BE CONSIDERED VALID COPIES.

NASA-JET PROPULSION LABORATORY
OU-1 TREATMENT SYSTEM, PASDENA, CA

PIPING & INSTRUMENTATION DIAGRAM
BACKWASH RECOVERY SYSTEM

SHAW PROJECTION# 100770

DRAWING SCALE: N/A
DESIGNED BY/DATE: SF/
DRAWN BY/DATE: LJ/02-05-04
CHECKED BY/DATE:
SHEET SIZE: D
REVISION: 4
SHEET 8 OF 8
DRAWING # PID-8
FILE # 1007700PID08-4

USFilter
Envirex Products
Waukesha, WI 800-524-6324

ALL INFORMATION CONTAINED ON THIS DOCUMENT IS THE PROPERTY OF SHAW ENVIRONMENTAL, INC. ("SEI") AND/OR ITS AFFILIATES. THE DESIGN CONCEPTS AND INFORMATION CONTAINED HEREIN ARE PROPERTY OF SEI AND ARE SUBMITTED IN CONFIDENCE. THEY ARE NOT TRANSFERABLE AND MUST BE USED ONLY FOR THE USE AND PROJECT FOR WHICH THE DOCUMENT IS EXPRESSLY SUBMITTED. THEY MUST NOT BE DISCLOSED, REPRODUCED, LOANED OR USED IN ANY OTHER MANNER WITHOUT THE EXPRESS WRITTEN CONSENT OF SEI. SEI ASSUMES NO RESPONSIBILITY OR LIABILITY FOR THE USE THIS DOCUMENT OR THE DESIGN CONCEPTS AND INFORMATION CONTAINED HEREIN FOR ANOTHER PROJECT, OR IN A MANNER THAT DOES NOT RELATE TO THE ORIGINALLY INTENDED USE OF THIS DOCUMENT. IN NO EVENT SHALL THIS DOCUMENT OR THE DESIGN CONCEPTS AND INFORMATION CONTAINED HEREIN BE USED IN ANY MANNER DETRIMENTAL TO THE INTEREST OF SEI. THE RIGHTS AND OBLIGATIONS OF SEI AND ITS CUSTOMER ARE FURTHER LIMITED IN THE AGREEMENT BETWEEN THEM FOR THIS PROJECT. ALL PATENT AND OTHER RIGHTS ARE RESERVED. ACCEPTANCE OF THE DELIVERY OF THIS DOCUMENT CONSTITUTES AGREEMENT TO THESE TERMS AND CONDITIONS.

SHAW'S AND USFILTER ENVIREX PRODUCTS' FLUIDIZED BED REACTOR TECHNOLOGY IS COVERED BY ONE OR MORE OF U.S. PATENT NOS. 5296200, 5296201, 5372712, 5411660, 5454938, 5538635, 5552052, 5584996, 5750028, 5766491, 5788842, 5976365, AND/OR PATENTS PENDING.

Shaw®
Shaw Environmental, Inc.
17 Princess Road
Lawrenceville, N.J. 08648
609-895-5340

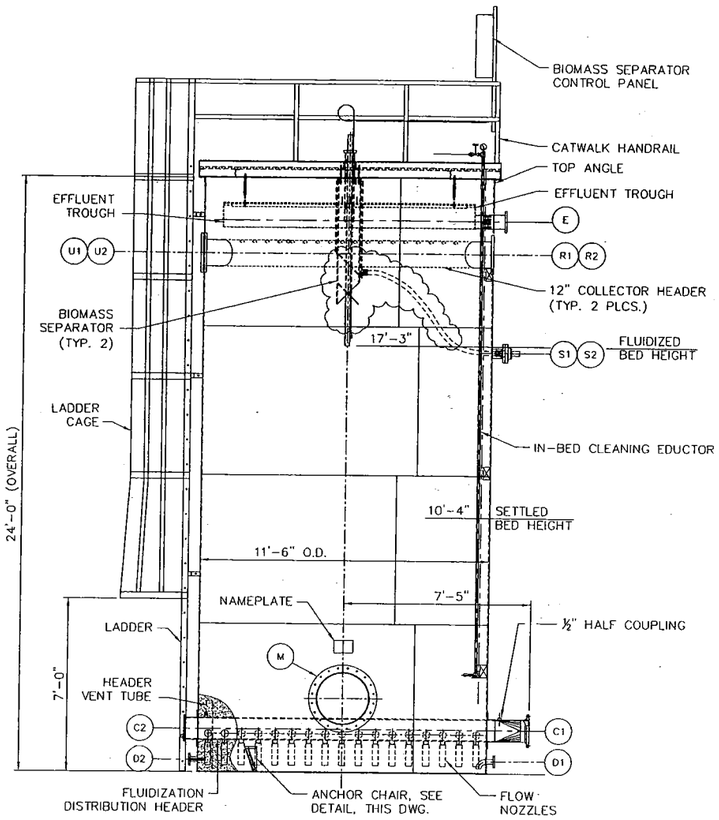

ELEVATION

(SEE PLAN VIEW FOR TRUE ORIENTATION)

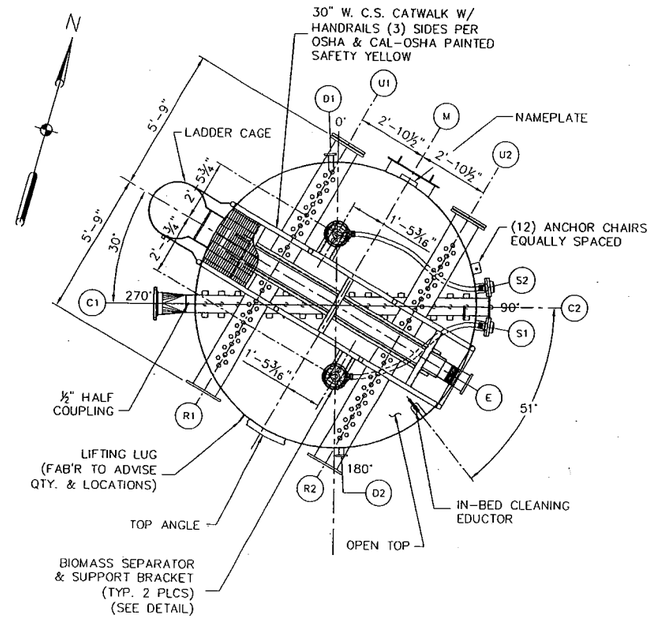

PLAN VIEW

TRUE ORIENTATION
(LATERALS NOT SHOWN FOR CLARITY)

NOZZLE SCHEDULE

NOZZLE	SIZE	ANSI RATING	NOZZLE SCH.	FLANGES TYPE	FLANGES FACE	FUNCTION	ELEVATION	COMMENTS	ORIENTATION
C1	10"	150#	20S	S.O.	RF	FLUIDIZATION INLET	1'-8¾" (INSIDE FLOOR)		270°
C2	10¾" x 8⅝"	N/A	.375"	PLATE	FLAT	HEADER CLEANOUT	1'-8¾" (INSIDE FLOOR)	W/ BLIND GASKET, & HARDWARE	90°
D1	2"	150#	40S	S.O.	RF	DRAIN	6"	W/ ELBOW	357°
D2	2"	150#	40S	S.O.	RF	SCREENED DRAIN	6"		177°
E	6"	150#	40S	S.O.	RF	EFFLUENT	22'-3 1/2"		120°
M	24"	N/A	.375"	PLATE	FLAT	MANWAY	3'-0"	W/ BLIND GASKET, & HARDWARE	30°
R1	12"	150#	20S	S.O.	RF	RECYCLE	20'-11⅝"		SEE DWG.
R2	12"	150#	20S	S.O.	RF	RECYCLE	20'-11⅝"		SEE DWG.
U1	12"	150#	20S	S.O.	RF	RECYCLE CLEANOUT	20'-11⅝"	W/ BLIND GASKET, & HARDWARE	SEE DWG.
U2	12"	150#	20S	S.O.	RF	RECYCLE CLEANOUT	20'-11⅝"	W/ BLIND GASKET, & HARDWARE	SEE DWG.
S1	4"	150#	40S	S.O.	RF	EXCESS BIOMASS	17'-0"		97.5°
S2	4"	150#	40S	S.O.	RF	EXCESS BIOMASS	17'-0"		82.5°

DESIGN DATA

DESIGN CODE: API 650 (LATEST EDITION)
SPECIFICATION: SHAW ENVIRONMENTAL ATMOSPHERIC TANK SPEC.
OPERATING PRESSURE: ATMOSPHERIC
DESIGN PRESSURE: ATMOSPHERIC
OPERATING TEMPERATURE: 70° F.
DESIGN TEMPERATURE: 100° F.
CORROSION ALLOWANCE: N/A
RADIOGRAPHY REQ'D. ☐ NONE ☒ SPOT XRAY
WIND PRESSURE: 70 MPH
SEISMIC: ZONE 4 PER API 650 APP. E
SP. GR. CONTENTS: 1.2
SHELL: 304 S/S
FLOOR: 304 S/S
TESTING REQ'D.: HYDROSTATIC (OR DYE PENETRANT) PER API 650
INSPECTION: ☒ REQUIRED ☐ NOT REQUIRED
EMPTY WEIGHT: 9,000 LBS.
OPERATING WEIGHT: 190,000 LBS.
LINING: N/A
INSULATION: N/A
JACKET: N/A
PAINTING: N/A

GENERAL NOTES:

1. DESIGN AND CONSTRUCTION TO BE IN ACCORDANCE WITH THE LATEST EDITION OF API 650 AND AWS D1.1.
2. UNLESS OTHERWISE NOTED, ALL FLANGE BOLT HOLES SHALL STRADDLE VESSEL CENTERLINES.
3. PROTECT ALL OPENINGS WITH COVERS PRIOR TO SHIPPING. PROVIDE PROPER BLOCKING INSIDE VESSEL TO PROTECT DURING SHIPMENT. USE SLINGS TO LIFT VESSEL.
4. 6" NOZZLE PROJECTIONS UNLESS OTHERWISE NOTED.
5. BASELINE FOR NOZZLE SCHEDULE ELEVATIONS IS THE BOTTOM OF THE BOTTOM PLATE.
6. CATWALK, LADDER, BIOMASS SERPARATOR, IN-BED CLEANING EDUCTOR, EFFLUENT TROUGH, FLOW NOZZLES AND LATERALS TO BE SHIPPED LOOSE FOR FIELD INSTALLATION BY OTHERS.

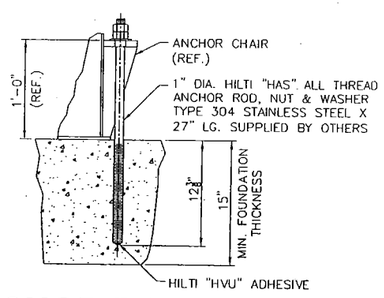

ANCHOR BOLT DETAIL

(12 REQ'D.)

FOUNDATION:

BASE SHEAR.....44,600 LBS.
OVERTURNING MOMENT.....513,000 FT. LBS.
MAX. COMP. LOAD ON CONCRETE.....5,100 LB./FT. OF SHELL
MAX. UPLIFT.....14,300 LBS./BOLT

CONTROLLING LOADS BASE ON UBC, SEISMIC ZONE 4, ANCHOR BOLT LOADS (EACH): SHEAR = 3,717 LB., TENSION = 14,300 LBS.
FOUNDATION TO BE FLAT AND LEVEL WITHIN ⅛" ON TANK DIAMETER.

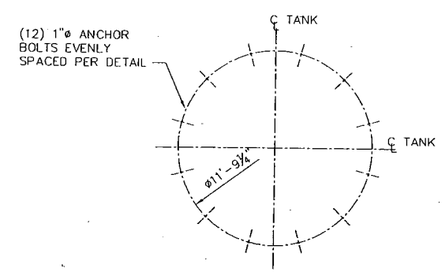

ANCHOR BOLT LAYOUT

PROCESS DESIGN DATA:

DESIGN FLOW RATES
FLUIDIZATION .....1,300 GPM
FEED.....250 GPM
EFFLUENT.....250 GPM
OPERATING CAPACITY.....18,000 GAL.
SETTLED BED VOLUME OF CARBON.....1,075 CU.FT.

REFERENCE:

EQUIPMENT PLAN.....M-1
P&ID.....PID-3
INTERNAL ASSEMBLY.....M-101
BIOMASS SEPARATORS.....M-102

REV	DATE	DESCRIPTION OF REVISION	REVISED BY	CHECKED
△				
△				
△	3-19-04	ISSUED FOR CONSTRUCTION	DL	SF
△	02-20-04	ISSUED FOR FOUNDATION DESIGN	KC	RL
△	2-5-04	ISSUED FOR INFORMATION	DL	KC

THIS IS A COMPUTER GENERATED DRAWING AND ONLY EDITS CONSISTENT WITH SHAW'S ORIGINAL CAD FORMAT SHALL BE CONSIDERED VALID COPIES.

NASA-JET PROPULSION LABORATORY
OU-1 TREATMENT SYSTEM, PASADENA, CA

TANK ARRANGEMENT DRAWING
FLUID BED REACTOR
FBR-301
11'-6" O.D. x 24'-0" O.A.H.

DRAWING SCALE: 3/8"=1'-0"
DESIGNED BY/DATE: KC/9-24-03
DRAWN BY/DATE: DL/9-29-03
CHECKED BY/DATE: RL/12-18-03
SHEET SIZE: D
REVISION: 0
SHEET 1 OF 1
DRAWING # M-100
FILE # 100770M100-0

LAST EDITED: 3-18-04 @ LAWRENCEVILLE | OPERATOR COMMENTS: | KC | PROJECT #: 100770 | PROJECT NAME: | JPL-CA

U.S. PATENTS 5750028, 5788842 AND PATENTS PENDING.

Shaw® Shaw Environmental, Inc.
Lawrenceville, N.J. 609-936-9300

ALL INFORMATION CONTAINED ON THIS DOCUMENT IS THE PROPERTY OF SHAW ENVIRONMENTAL, INC. ("SEI") AND/OR ITS AFFILIATES. THE DESIGN CONCEPTS AND INFORMATION CONTAINED HEREIN ARE PROPERTY OF SEI AND ARE SUBMITTED IN CONFIDENCE. THEY ARE NOT TRANSFERABLE AND MUST BE USED ONLY FOR THE USE AND PROJECT FOR WHICH THE DOCUMENT IS EXPRESSLY SUBMITTED. THEY MUST NOT BE DISCLOSED, REPRODUCED, LOANED OR USED IN ANY OTHER MANNER WITHOUT THE EXPRESS WRITTEN CONSENT OF SEI. SEI ASSUMES NO RESPONSIBILITY OR LIABILITY FOR THE USE THIS DOCUMENT OR THE DESIGN CONCEPTS AND INFORMATION CONTAINED HEREIN FOR ANOTHER PROJECT, OR IN A MANNER THAT DOES NOT RELATE TO THE ORIGINALLY INTENDED USE OF THIS DOCUMENT. IN NO EVENT SHALL THIS DOCUMENT OR THE DESIGN CONCEPTS AND INFORMATION CONTAINED HEREIN BE USED IN ANY MANNER DETRIMENTAL TO THE INTEREST OF SEI. THE RIGHTS AND OBLIGATIONS OF SEI AND ITS CUSTOMER ARE FURTHER LIMITED IN THE AGREEMENT BETWEEN THEM FOR THIS PROJECT. ALL PATENT AND OTHER RIGHTS ARE RESERVED. ACCEPTANCE OF THE DELIVERY OF THIS DOCUMENT CONSTITUTES AGREEMENT TO THESE TERMS AND CONDITIONS.

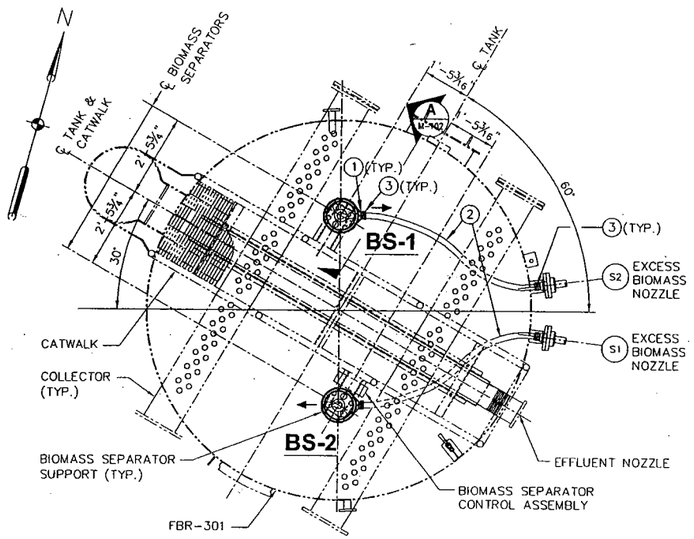

PLAN VIEW

SCALE: 1/2"=1'-0"

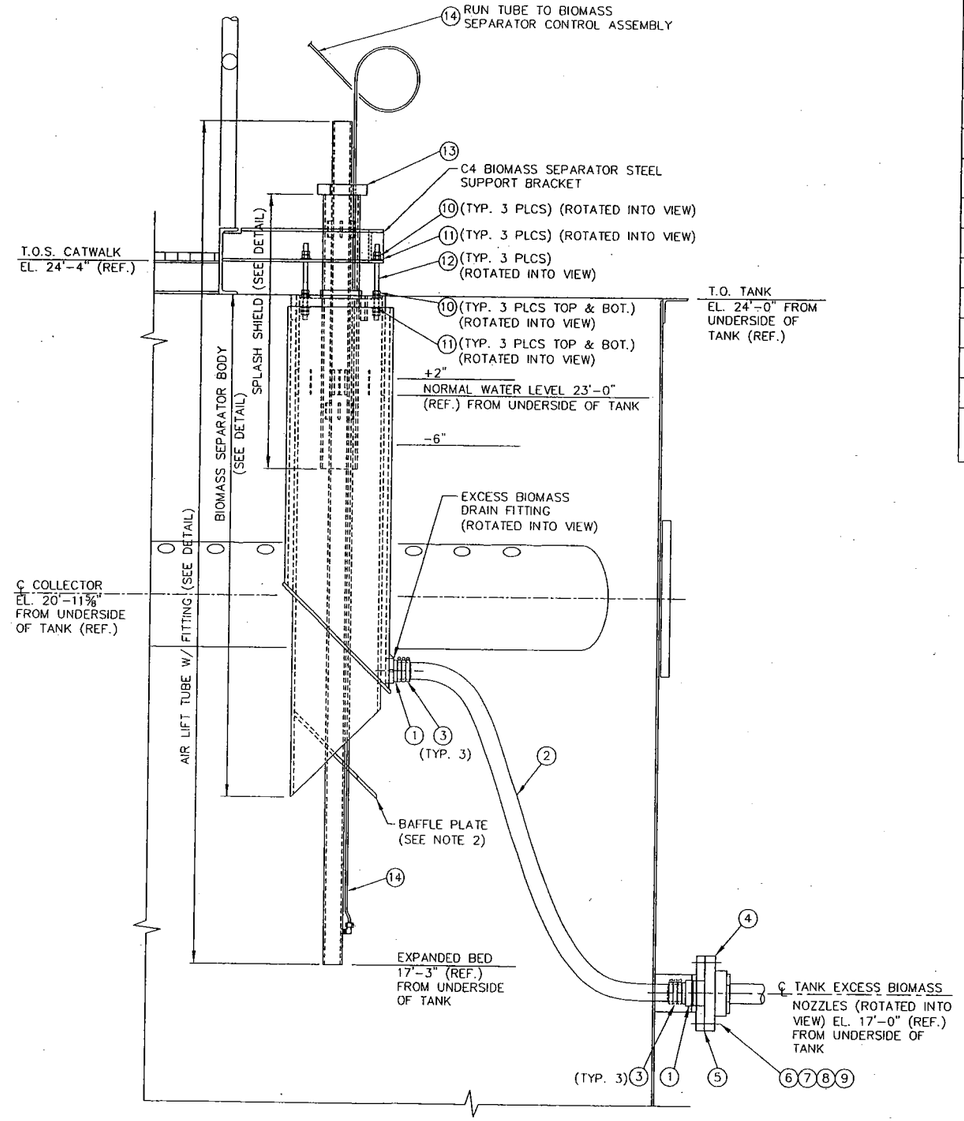

ASSEMBLY VIEW

(SEE PLAN VIEW FOR TRUE ORIENTATION) A M-102

SCALE: 1½"=1'-0"

BILL OF MATERIAL

(ONE ASSEMBLY PER BIOMASS SEPARATOR)

ITEM	QTY.	DESCRIPTION	BOM NO.	SUPPLIED BY
1	2 EA.	2" ADAPTER (MNPT x BARB), POLYPROPYLENE DIXON #HB-200	3-40	SHAW
2	10 FT. EA.	2" I.D. x 2 3/8" O.D. HOSE, PVC (CUT LENGTH TO SUIT)	3-42	
3	6 EA.	2 3/8" HOSE CLAMP, WORM DRIVE, 316 S.S.	3-43	
4	1 EA.	4" FLANGE ADAPTER ASSEMBLY, SEE DWG. M-306	3-44.1	
5	1 EA.	GASKET, 1/8" THICK, EPDM, FULL FACE	3-45	
6	8 EA.	5/8"-11 x 3" BOLT, HEXHEAD, FULL THREAD, COURSE, 316 S.S.	3-46	
7	16 EA.	5/8" FLAT WASHER, 316 S.S.	3-47	
8	8 EA.	5/8" LOCK WASHER, 316 S.S.	3-48	
9	8 EA.	5/8"-11 HEXNUT, 316 S.S.	3-49	
10	18 EA.	1/2" DOUBLE NUTS, 316 S.S.	3-33	
11	9 EA.	1/2" PLAIN WASHER, 316 S.S.	3-34	
12	3 EA.	1/2" THREADED ROD, 316 S.S., 9" LONG	3-32	
13	1 EA.	2" AIR LIFT PIPE SUPPORT CLAMP, 316 S.S.	3-31	
14	1 EA.	1/4" O.D. BLACK POLYPROPYLENE AIR TUBING 300 P.S.I. WORKING PRESSURE, PARKER #PPB-43-0500	3-52	

NOTES:

1. REFER TO DWG. M-305 FOR BIOMASS SEPARATOR DETAILS.
2. ORIENT BIOMASS SEPARATOR BOTTOM SO THAT THE BAFFLE PLATE DECLINES IN A CLOCKWISE ROTATION. ARROW (◄—) INDICATES DIRECTION OF BIOMASS SEPARATOR BAFFLE PLATE LOW POINT.
3. ALL PVC MATERIAL TO BE A UNIFORM GRAY COLOR.
4. WT. EMPTY = 100 LBS. (APPROX.)
   WT. FULL = 300 LBS. (APPROX.)

REFERENCES:

M-1	GENERAL ARRANGEMENT OU-1 TREATMENT SYSTEM
M-100	TANK ARRANGEMENT DRAWING FBR-301
M-304	BIOMASS SEPARATOR CONTROL PANEL
M-305	BIOMASS SEPARATOR DETAILS
M-306	FLANGE ADAPTER ASSEMBLY

REV	DATE	DESCRIPTION OF REVISION	REVISED BY	CHECKED
△				
△				
△				
△	4- -04		DL	
△	3-19-04	ISSUED FOR CONSTRUCTION	DL	SF

THIS IS A COMPUTER GENERATED DRAWING AND ONLY EDITS CONSISTENT WITH SHAW'S ORIGINAL CAD FORMAT SHALL BE CONSIDERED VALID COPIES.

NASA-JET PROPULSION LABORATORY
OU-1 TREATMENT SYSTEM, PASADENA, CA

INSTALLATION
BIOMASS SEPARATORS
FBR-301

DRAWING SCALE: AS NOTED
DESIGNED BY/DATE: KC/12-16-03
DRAWN BY/DATE: DL/12-17-03
CHECKED BY/DATE: SF/03-17-04
SHEET SIZE: D
REVISION: 1
SHEET 1 OF 1
DRAWING #: M-102
FILE # 10077OM102-1

U.S. PATENTS 5750028, 5788842 AND PATENTS PENDING.

Shaw® Shaw Environmental, Inc.
Lawrenceville, N.J. 609-936-9300

ALL INFORMATION CONTAINED ON THIS DOCUMENT IS THE PROPERTY OF SHAW ENVIRONMENTAL, INC. ("SEI") AND/OR ITS AFFILIATES. THE DESIGN CONCEPTS AND INFORMATION CONTAINED HEREIN ARE PROPERTY OF SEI AND ARE SUBMITTED IN CONFIDENCE. THEY ARE NOT TRANSFERABLE AND MUST BE USED ONLY FOR THE USE AND PROJECT FOR WHICH THE DOCUMENT IS EXPRESSLY SUBMITTED. THEY MUST NOT BE DISCLOSED, REPRODUCED, LOANED OR USED IN ANY OTHER MANNER WITHOUT THE EXPRESS WRITTEN CONSENT OF SEI. SEI ASSUMES NO RESPONSIBILITY OR LIABILITY FOR THE USE THIS DOCUMENT OR THE DESIGN CONCEPTS AND INFORMATION CONTAINED HEREIN FOR ANOTHER PROJECT, OR IN A MANNER THAT DOES NOT RELATE TO THE ORIGINALLY INTENDED USE OF THIS DOCUMENT. IN NO EVENT SHALL THIS DOCUMENT OR THE DESIGN CONCEPTS AND INFORMATION CONTAINED HEREIN BE USED IN ANY MANNER DETRIMENTAL TO THE INTEREST OF SEI. THE RIGHTS AND OBLIGATIONS OF SEI AND ITS CUSTOMER ARE FURTHER LIMITED IN THE AGREEMENT BETWEEN THEM FOR THIS PROJECT. ALL PATENT AND OTHER RIGHTS ARE RESERVED. ACCEPTANCE OF THE DELIVERY OF THIS DOCUMENT CONSTITUTES AGREEMENT TO THESE TERMS AND CONDITIONS.

LAST EDITED: 4-1-04 @ LAWRENCEVILLE | OPERATOR: DL | PROJECT #: 100770 | PROJECT NAME: JPL-CA

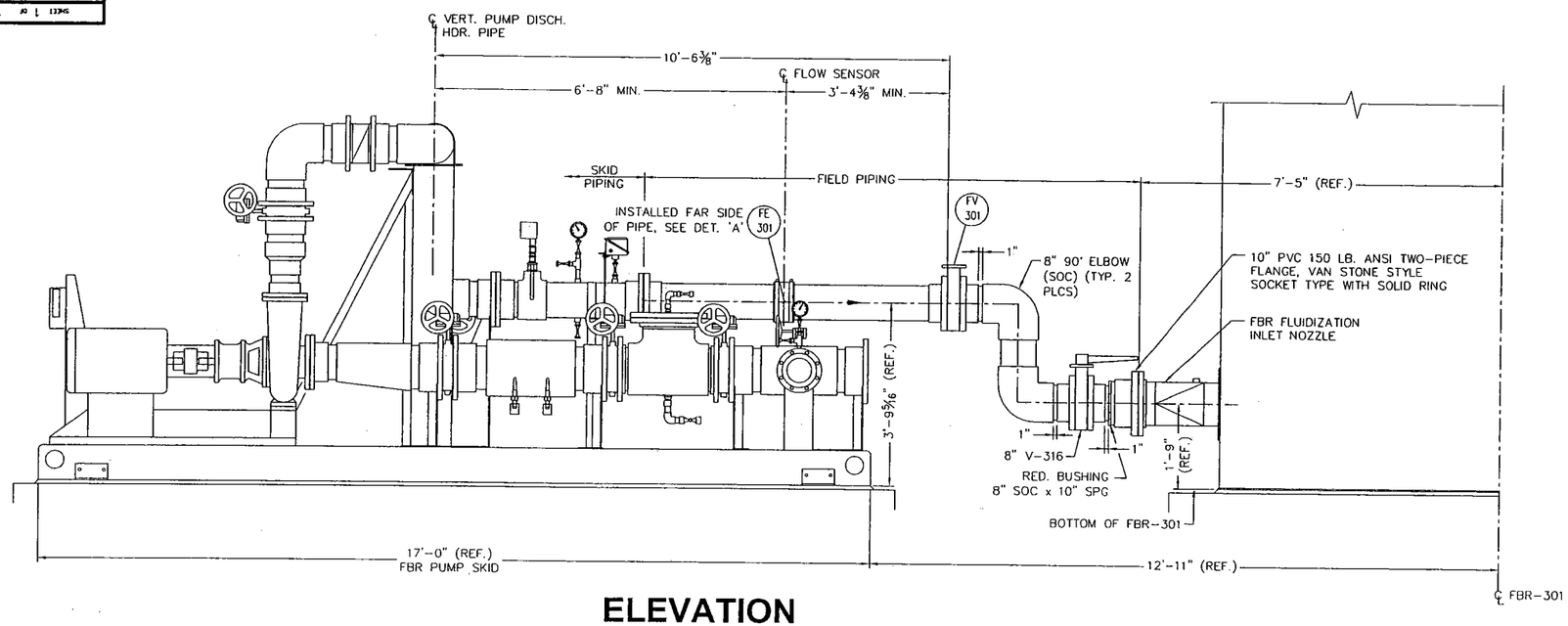

ELEVATION

SCALE: 3/4"=1'-0"

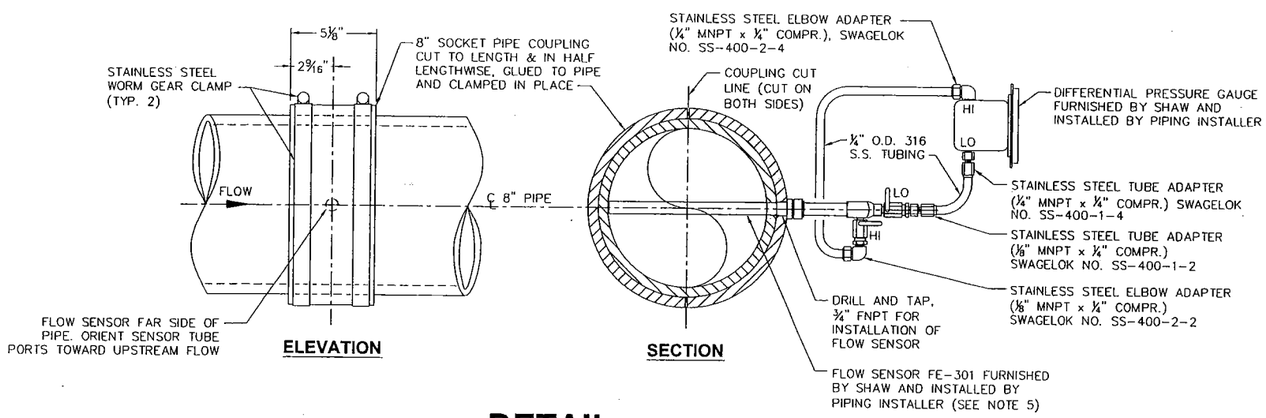

DETAIL A M-103

SCALE: NONE

GENERAL NOTES:

1. PIPING INSTALLER SHALL SUPPLY ALL VALVES, FLANGES, FITTINGS AND PIPING UNLESS OTHERWISE NOTED.
2. PIPING INSTALLER SHALL SUPPLY ⅛" THICK EPDM GASKET AT EACH FLANGE CONNECTION.
3. PIPING INSTALLER SHALL SUPPLY 304 STAINLESS STEEL HEX HEAD BOLT, HEX NUT, TWO PLAIN FLAT WASHERS & LOCK WASHER AT EACH FLANGE BOLT HOLE.
4. ALL FITTINGS AND PIPING WILL BE SCHEDULE 80 PVC UNLESS OTHERWISE NOTED.
5. FLANGES SHALL BE 8" PVC 150 LB. ANSI TWO-PIECE VAN STONE STYLE SOCKET TYPE WITH SOLID RING UNLESS OTHERWISE NOTED.
6. FIELD PIPE SUPPORTS TO BE SUPPLIED AND INSTALLED BY OTHERS.

REFERENCES:

M-1	GENERAL ARRANGEMENT - FLUIDIZED BED REACTOR SYSTEM
M-100	TANK ARRANGEMENT DRAWING FLUIDIZED BED REACTOR T-301
PID-3	P&ID INSTRUMENTATION DIAGRAMS PACKAGED GROUNDWATER TREATMENT SYSTEM

REV	DATE	DESCRIPTION OF REVISION	REVISED BY	CHECKED
△				
△				
△				
△				
△	3/30/04	ISSUED FOR CONSTRUCTION	DL	SF

THIS IS A COMPUTER GENERATED DRAWING AND ONLY EDITS CONSISTENT WITH SHAW'S ORIGINAL CAD FORMAT SHALL BE CONSIDERED VALID COPIES.

NASA-JET PROPULSION LABORATORY
OU-1 TREATMENT SYTEM, PASADENA, CA

FLOWMETER INSTALLATION DETAIL

DRAWING SCALE: AS NOTED
DESIGNED BY/DATE:
DRAWN BY/DATE: LJ/03-03-04
CHECKED BY/DATE: SF/03-29-04
SHEET SIZE: D
REVISION: 0
SHEET 1 OF 1
DRAWING # M-103
FILE # 100770M103-0

U.S. PATENTS 5750028, 5788842 AND PATENTS PENDING.

THIS DRAWING IS A VISUAL REPRESENTATION OF THE EQUIPMENT AND/OR SYSTEM PROPOSED. IT IS NOT INTENDED FOR CONSTRUCTION PURPOSES.

Shaw® Shaw Environmental, Inc.
Lawrenceville, N.J. 609-936-9300

ALL INFORMATION CONTAINED ON THIS DOCUMENT IS THE PROPERTY OF SHAW ENVIRONMENTAL, INC. ("SEI") AND/OR ITS AFFILIATES. THE DESIGN CONCEPTS AND INFORMATION CONTAINED HEREIN ARE PROPERTY OF SEI AND ARE SUBMITTED IN CONFIDENCE. THEY ARE NOT TRANSFERABLE AND MUST BE USED ONLY FOR THE USE AND PROJECT FOR WHICH THE DOCUMENT IS EXPRESSLY SUBMITTED. THEY MUST NOT BE DISCLOSED, REPRODUCED, LOANED OR USED IN ANY OTHER MANNER WITHOUT THE EXPRESS WRITTEN CONSENT OF SEI. SEI ASSUMES NO RESPONSIBILITY OR LIABILITY FOR THE USE THIS DOCUMENT OR THE DESIGN CONCEPTS AND INFORMATION CONTAINED HEREIN FOR ANOTHER PROJECT, OR IN A MANNER THAT DOES NOT RELATE TO THE ORIGINALLY INTENDED USE OF THIS DOCUMENT. IN NO EVENT SHALL THIS DOCUMENT OR THE DESIGN CONCEPTS AND INFORMATION CONTAINED HEREIN BE USED IN ANY MANNER DETRIMENTAL TO THE INTEREST OF SEI. THE RIGHTS AND OBLIGATIONS OF SEI AND ITS CUSTOMER ARE FURTHER LIMITED IN THE AGREEMENT BETWEEN THEM FOR THIS PROJECT. ALL PATENT AND OTHER RIGHTS ARE RESERVED. ACCEPTANCE OF THE DELIVERY OF THIS DOCUMENT CONSTITUTES AGREEMENT TO THESE TERMS AND CONDITIONS.

LAST EDITED: 3-30-04 ● LAWRENCEVILLE, NJ | OPERATOR COMMENTS: | SL PROJECT # 100770 | PROJECT NAME: JET PROPULSION LABORATORY

SHEET 1 OF 1 | DRAWING # M-103 | FILE # 100770M103-0

DESIGN DATA

DESIGN CODE:	API 650 (LATEST EDITION)
SPECIFICATION:	SHAW ENVIRONMENTAL ATMOSPHERIC TANK
OPERATING PRESSURE:	ATMOSPHERIC
DESIGN PRESSURE:	−1"/+2" W.C.
OPERATING TEMPERATURE:	60°F
DESIGN TEMPERATURE:	100°F
CORROSION ALLOWANCE:	N/A
RADIOGRAPHY REQ'D.	☐ NONE ☑ SPOT XRAY
WIND PRESSURE:	70 MPH
SEISMIC:	ZONE 4 PER API 650 APP. E
SP. GR. CONTENTS:	1.0
SHELL:	304 S/S
FLOOR:	304 S/S
TESTING REQ'D.:	HYDROSTATIC (OR DYE PENETRANT) PER API 650
INSPECTION:	☑ REQUIRED ☐ NOT REQUIRED
EMPTY WEIGHT:	6,000 LBS.
OPERATING WEIGHT:	85,000 LBS.
LINING:	NONE
INSULATION:	NONE
JACKET:	NONE
PAINTING:	N/A

NOZZLE SCHEDULE

NOZZLE	SIZE	ANSI RATING	NOZZLE SCH.	FLANGES TYPE	FLANGES FACE	FUNCTION	ELEVATION	COMMENTS	ORIENTATION
A	4"	150#	40S	S.O.	R.F.	AIR INLET	9"		315°
B	6"	150#	40S	S.O.	R.F.	EFFLUENT INLET	16'-0"		225°
D	3"	150#	40S	S.O.	R.F.	DRAIN	0'-6"		240°
E	6"	150#	40S	S.O.	R.F.	PUMP SUCTION	1'-6"		180°
L	4"	150#	40S	S.O.	R.F.	LEVEL SWITCH HIGH	18'-9"		60°
M	24"	N/A	1/4"	PLATE	R.F.	SHELL MANWAY	3'-0"	WITH BLIND, GSKT. & HRDWR	0°
O	6"	150#	40S	S.O.	R.F.	OVERFLOW	19'-3"		195°
P	1"	150#	40S	S.O.	R.F.	PUMP RECIRC.	3'-0"		112°
R	1"	150#	40S	S.O.	R.F.	PURGE RETURN	3'-10" RAD		323° (HILLSIDE)
S	6"	150#	40S	S.O.	R.F.	SPARE	2'-4" RAD	WITH BLIND, GSKT. & HRDWR	90° (HILLSIDE)
T	2"	150#	40S	S.O.	R.F.	LEVEL TRANSMITTER	0'-6"		15°
V	6"	150#	40S	S.O.	R.F.	VENT	21'-3 1/4"		0°

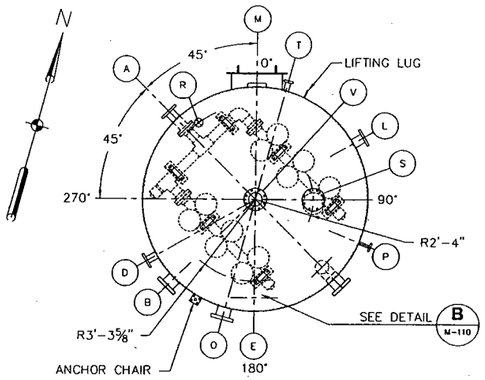

PLAN VIEW

(TRUE ORIENTATION)
SCALE: 3/8"=1'-0"

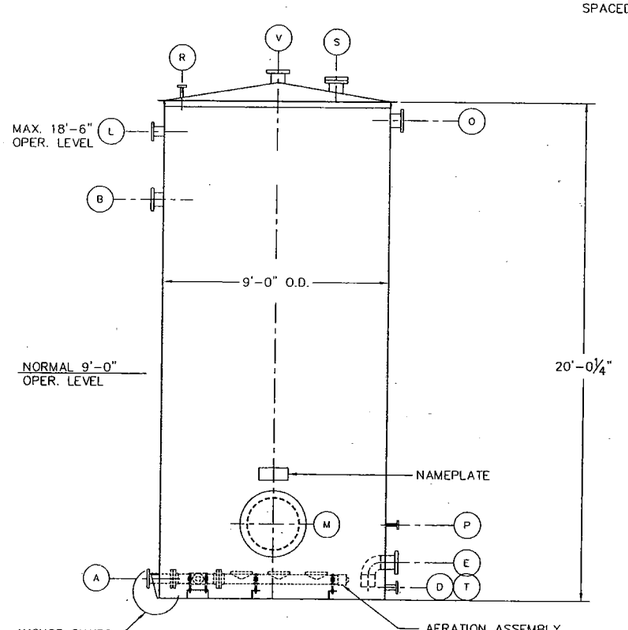

ELEVATION

(SEE PLAN VIEW FOR TRUE ORIENTATION)
SCALE: 3/8"=1'-0"

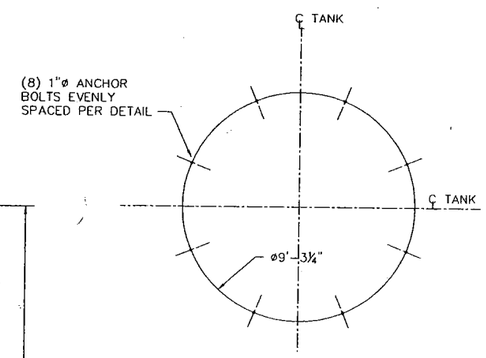

ANCHOR BOLT LAYOUT

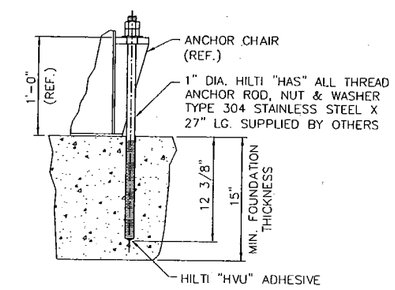

ANCHOR BOLT DETAIL

(8 REQ'D.)

FOUNDATION:

BASE SHEAR.....20,100 LBS.
OVERTURNING MOMENT.....204,656 FT. LBS.
MAX. COMP. LOAD ON CONCRETE.....3,300 LB./FT. OF SHELL
MAX. UPLIFT.....10,690 LBS./BOLT

CONTROLLING LOADS BASE ON UBC, SEISMIC ZONE 4, ANCHOR BOLT LOADS (EACH): SHEAR = 2,613 LB., TENSION = 10,690 LBS.
FOUNDATION TO BE FLAT AND LEVEL WITHIN ⅛" ON TANK DIAMETER.

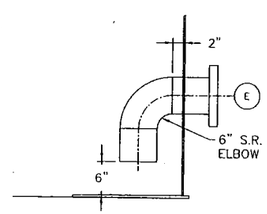

DETAIL B

SCALE: 1"=1'-0" (B / M-110)

GENERAL NOTES:

1. DESIGN AND CONSTRUCTION TO BE IN ACCORDANCE WITH THE LATEST EDITION OF API 650 AND AWS D1.1.
2. UNLESS OTHERWISE NOTED, ALL FLANGE BOLT HOLES SHALL STRADDLE VESSEL CENTERLINES.
3. PROTECT ALL OPENINGS WITH COVERS PRIOR TO SHIPPING. PROVIDE PROPER BLOCKING INSIDE VESSEL TO PROTECT DURING SHIPMENT. USE SLINGS TO LIFT VESSEL.
4. 6" NOZZLE PROJECTIONS UNLESS OTHERWISE NOTED.
5. BASELINE FOR NOZZLE SCHEDULE ELEVATIONS IS THE BOTTOM OF THE BOTTOM PLATE.
6. AERATION ASSEMBLY TO BE SHIPPED LOOSE FOR FIELD INSTALLATION BY OTHERS.

PROCESS DESIGN DATA:

AIR.....20 SCFM @ 10 PSIG
HEADERS.....3 TOTAL
FLEX DISC DIFFUSERS.....4 PER HEADER (12 TOTAL)

REFERENCE:

EQUIPMENT PLAN.....M-1
P&ID.....PID-4
AERATION EQUIPMENT
GENERAL ARRANGEMENT.....41074-500, -501

REV	DATE	DESCRIPTION OF REVISION	REVISED BY	CHECKED
4				
3				
2	3-19-04	ISSUED FOR CONSTRUCTION	DL	SF
1	2-20-04	ISSUED FOR FOUNDATION DESIGN	KC	RL
0	2-5-04	ISSUED FOR INFORMATION	DL	KC

THIS IS A COMPUTER GENERATED DRAWING AND ONLY EDITS CONSISTENT WITH SHAW'S ORIGINAL CAD FORMAT SHALL BE CONSIDERED VALID COPIES.

NASA-JET PROPULSION LABORATORY
OU-1 TREATMENT SYSTEM, PASADENA, CA

TANK ARRANGEMENT DRAWING
AERATION TANK
T-401
9'-0" O.D. x 20'-0 1/4" STR.

DRAWING SCALE: AS NOTED
DESIGNED BY/DATE: KC/11-24-03
DRAWN BY/DATE: DL/11-26-03
CHECKED BY/DATE: RL/12-18-03
SHEET SIZE: D
REVISION: 0
SHEET 1 OF 1
DRAWING # M-110
FILE # 100770M110-0

U.S. PATENTS 5445660, 5821114, 5861303 AND PATENTS PENDING.

Shaw® Shaw Environmental, Inc.
Lawrenceville, N.J. 609-936-9300

ALL INFORMATION CONTAINED ON THIS DOCUMENT IS THE PROPERTY OF SHAW ENVIRONMENTAL, INC. ("SEI") AND/OR ITS AFFILIATES. THE DESIGN CONCEPTS AND INFORMATION CONTAINED HEREIN ARE PROPERTY OF SEI AND ARE SUBMITTED IN CONFIDENCE. THEY ARE NOT TRANSFERABLE AND MUST BE USED ONLY FOR THE USE AND PROJECT FOR WHICH THE DOCUMENT IS EXPRESSLY SUBMITTED. THEY MUST NOT BE DISCLOSED, REPRODUCED, LOANED OR USED IN ANY OTHER MANNER WITHOUT THE EXPRESS WRITTEN CONSENT OF SEI. SEI ASSUMES NO RESPONSIBILITY OR LIABILITY FOR THE USE THIS DOCUMENT OR THE DESIGN CONCEPTS AND INFORMATION CONTAINED HEREIN FOR ANOTHER PROJECT, OR IN A MANNER THAT DOES NOT RELATE TO THE ORIGINALLY INTENDED USE OF THIS DOCUMENT. IN NO EVENT SHALL THIS DOCUMENT OR THE DESIGN CONCEPTS AND INFORMATION CONTAINED HEREIN BE USED IN ANY MANNER DETRIMENTAL TO THE INTEREST OF SEI. THE RIGHTS AND OBLIGATIONS OF SEI AND ITS CUSTOMER ARE FURTHER LIMITED IN THE AGREEMENT BETWEEN THEM FOR THIS PROJECT. ALL PATENT AND OTHER RIGHTS ARE RESERVED. ACCEPTANCE OF THE DELIVERY OF THIS DOCUMENT CONSTITUTES AGREEMENT TO THESE TERMS AND CONDITIONS.

LAST EDITED: 3-18-04 ● LAWRENCEVILLE | OPERATION: COMMENTS: | PROJECT # 100770 | PROJECT NAME: JPL-CA

SHEET 1 OF 1
DRAWING # M-130
FILE # 100770M130-0

GENERAL NOTES:

1. CONTAINER IS SHIPPED PRE-FABRICATED AND ASSEMBLED AS SHOWN.
   EXTERIOR PAINT: WHITE;
   INTERIOR: FRAMED, 2" THICK R14 FOAM INSULATION, FINISHED
2. CONTROL AND POWER CABLES ARE SHOP INSTALLED IN EMT CONDUIT BETWEEN MCC, PLC AND MAIN DISTRIBUTION PANELS.
3. LIGHTING, HVAC AND RECEPTACLES ARE SHOP WIRED IN EMT CONDUIT TO MAIN DISTRIBUTION PANEL.
4. CONTAINER PENETRATIONS FOR POWER FEED AND DISTRIBUTION OF POWER & CONTROL CIRCUIT TO BE BY OTHERS.
5. CONSTRUCTION SHALL MEET REQUIREMENTS OF NFPA NON-OCCUPIED SPACES.
6. WIRING AND INSTALLATION SHALL BE IN ACCORDANCE WITH NEC (LATESTED EDITION).

REFERENCE DRAWING:

ONE-LINE ELECTRIC & MCC DETAIL..... E-1
GENERAL ARRANGEMENT..... M-1

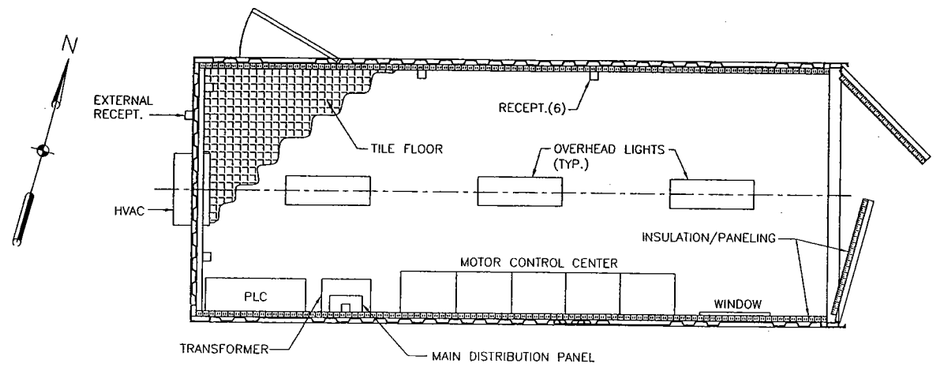

PLAN VIEW

(TOP REMOVED)

FOUNDATION:

CONTAINER WEIGHT.....7,000 LBS.
BASE SHEAR.....1,400 LBS.
OVERTURNING MOMENT.....NONE FT-LBS.
MAX. COMP LOAD ON CONCRETE.....265 LBS./FT.
MAX UPLIFT.....0 LBS./BOLT

CONTROLLING LOADS BASED ON UBC, SEISMIC ZONE 4.
ANCHOR BOLT LOADS (EACH): SHEAR = 350 LB,
TENSION = 0 LB.

FOUNDATION TO BE FLAT AND LEVEL WITHIN ⅛"/20FT.

ANCHOR BOLT DRILLING AND INSTALLATION TO BE PER MANUFACTURER'S INSTRUCTIONS:

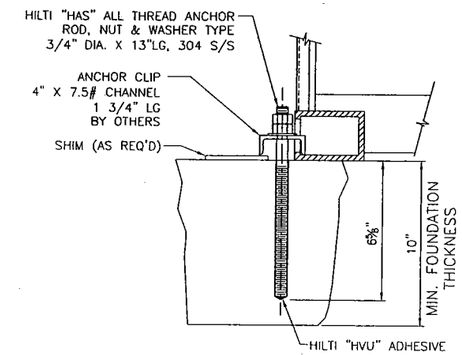

ANCHOR BOLT DETAIL

(4 REQ'D)

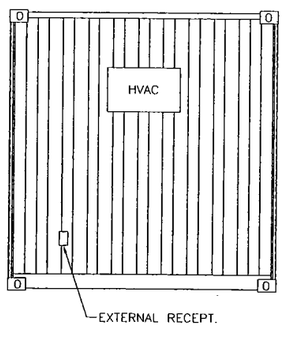

CLOSED END VIEW

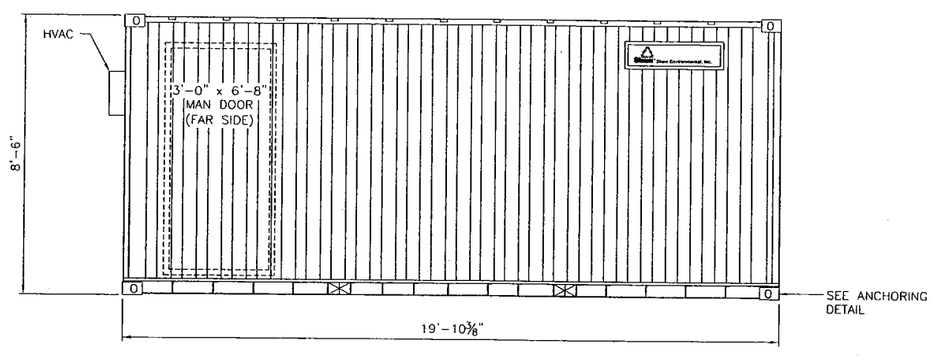

SIDE ELEVATION

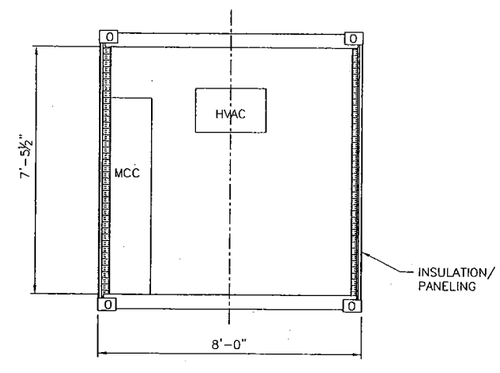

DOOR END VIEW

(DOORS REMOVED)

REV	DATE	DESCRIPTION OF REVISION	REVISED BY	CHECKED
4				
3				
2	03-11-04	ISSUED FOR CONSTRUCTION	DL	KC
1	2-18-03	ISSUED FOR PROCUREMENT	DAP	KC
0	2-5-04	ISSUED FOR INFORMATION	DAP	KC

THIS IS A COMPUTER GENERATED DRAWING AND ONLY EDITS CONSISTENT WITH SHAW'S ORIGINAL CAD FORMAT SHALL BE CONSIDERED VALID COPIES.

DRAWING SCALE: 1/2"=1'-0"
DESIGNED BY/DATE: KC/12-4-03
DRAWN BY/DATE: DAP/12-8-03
CHECKED BY/DATE: KC/12-8-03

U.S. PATENTS 5750028, 5788842 AND PATENTS PENDING.

Shaw® Shaw Environmental, Inc.
Lawrenceville, N.J. 609-936-9300

ALL INFORMATION CONTAINED ON THIS DOCUMENT IS THE PROPERTY OF SHAW ENVIRONMENTAL, INC. ("SEI") AND/OR ITS AFFILIATES. THE DESIGN CONCEPTS AND INFORMATION CONTAINED HEREIN ARE PROPERTY OF SEI AND ARE SUBMITTED IN CONFIDENCE. THEY ARE NOT TRANSFERABLE AND MUST BE USED ONLY FOR THE USE AND PROJECT FOR WHICH THE DOCUMENT IS EXPRESSLY SUBMITTED. THEY MUST NOT BE DISCLOSED, REPRODUCED, LOANED OR USED IN ANY OTHER MANNER WITHOUT THE EXPRESS WRITTEN CONSENT OF SEI. SEI ASSUMES NO RESPONSIBILITY OR LIABILITY FOR THE USE THIS DOCUMENT OR THE DESIGN CONCEPTS AND INFORMATION CONTAINED HEREIN FOR ANOTHER PROJECT, OR IN A MANNER THAT DOES NOT RELATE TO THE ORIGINALLY INTENDED USE OF THIS DOCUMENT. IN NO EVENT SHALL THIS DOCUMENT OR THE DESIGN CONCEPTS AND INFORMATION CONTAINED HEREIN BE USED IN ANY MANNER DETRIMENTAL TO THE INTEREST OF SEI. THE RIGHTS AND OBLIGATIONS OF SEI AND ITS CUSTOMER ARE FURTHER LIMITED IN THE AGREEMENT BETWEEN THEM FOR THIS PROJECT. ALL PATENT AND OTHER RIGHTS ARE RESERVED. ACCEPTANCE OF THE DELIVERY OF THIS DOCUMENT CONSTITUTES AGREEMENT TO THESE TERMS AND CONDITIONS.

NASA-JET PROPULSION LABORATORY
OU-1 TREATMENT SYSTEM, PASADENA, CA

ARRANGEMENT DRAWING
ELECTRICAL EQUIPMENT BUILDING

SHEET SIZE: D
REVISION: 0
SHEET 1 OF 1
DRAWING # M-130
FILE # 100770M130-0

LAST EDITED: 3-9-04 @ LAWRENCEVILLE | OPERATOR: DL | PROJECT # 100770 | PROJECT NAME: JET PROPULSION LABORATORY

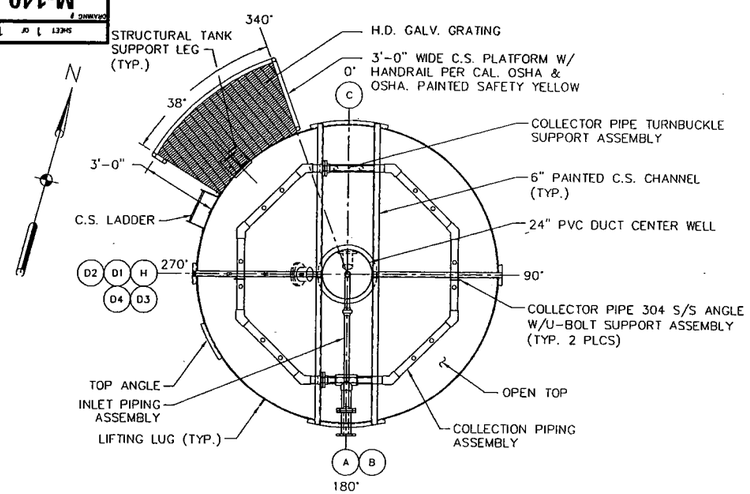

PLAN VIEW

TRUE ORIENTATION

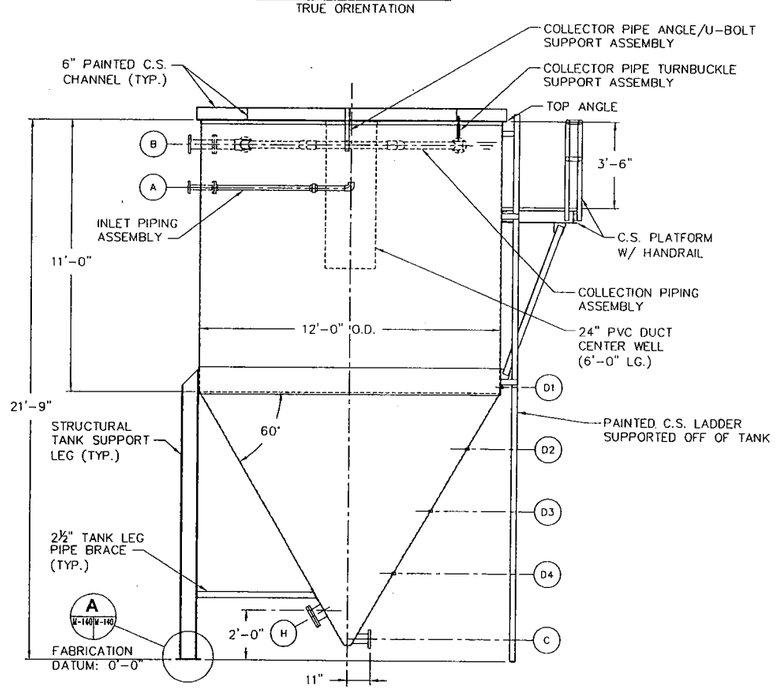

ELEVATION

(SEE PLAN VIEW FOR TRUE ORIENTATION)

DESIGN DATA

DESIGN CODE:	SEE NOTE 7
SPECIFICATION:	SHAW ENVIRONMENTAL ATMOSPHERIC TANK
OPERATING PRESSURE:	ATMOSPHERIC
DESIGN PRESSURE:	ATMOSPHERIC
OPERATING TEMPERATURE:	60°F
DESIGN TEMPERATURE:	100°F
CORROSION ALLOWANCE:	N/A
RADIOGRAPHY REQ'D.	☑ NONE ☐ SPOT XRAY
WIND PRESSURE:	70 MPH
SEISMIC:	ZONE 4 PER API 650 APP. E
SP. GR. CONTENTS:	1.1
SHELL:	304 S/S
FLOOR:	304 S/S
TESTING REQ'D.:	HYDROSTATIC (OR DYE PENETRANT) PER API 650
INSPECTION:	☑ REQUIRED ☐ NOT REQUIRED
EMPTY WEIGHT:	7,000 LBS.
OPERATING WEIGHT:	119,000 LBS.
LINING:	NONE
INSULATION:	NONE
JACKET:	NONE
PAINTING:	SEE NOTE 8

NOZZLE SCHEDULE

NOZZLE	SIZE	ANSI RATING	NOZZLE SCH.	FLANGES TYPE	FLANGES FACE	FUNCTION	ELEVATION	COMMENTS	ORIENTATION
A	2"	150#	40S	S.O.	R.F.	INLET	19'-0"	DOUBLE FLANGE	180°
B	4"	150#	40S	S.O.	R.F.	OVERFLOW	20'-9"	DOUBLE FLANGE	180°
C	4"	150#	40S	S.O.	R.F.	CONC. DRAW OFF	10½"		0°
D1	1/2"	3000#	NPT	FULL CPLG		SAMPLE	11'-0"		270°
D2	1/2"	3000#	NPT	FULL CPLG		SAMPLE	8'-6"		270°
D3	1/2"	3000#	NPT	FULL CPLG		SAMPLE	6'-0"		270°
D4	1/2"	3000#	NPT	FULL CPLG		SAMPLE	3'-6"		270°
H	6"	150#	40S	S.O.	R.F.	HAND HOLE	SEE DWG.	W/ BLIND, GASKET & HARDWARE	270°

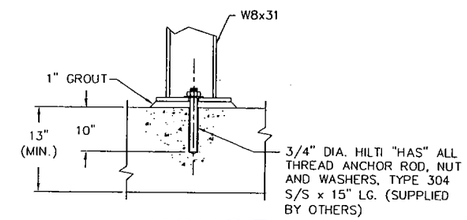

ANCHOR BOLT DETAIL

A M-140/M-140

(TYP. 4 PLCS)
SCALE: NONE

BASE SHEAR.....41,099 LBS.
LBS. OVERTURNING MOMENT.....579,275 FT-LBS.
MAX. COMP. LOAD ON CONCRETE.....1,544 P.S.I.
MAX. UPLIFT ON ANCHOR BOLT.....8,188 LBS.

CONTROLLING LOADS BASED ON UBC, SEISMIC ZONE 4
ANCHOR BOLT LOADS (EACH):
SHEAR=5,137 LBS., TENSION=8,188 LBS.

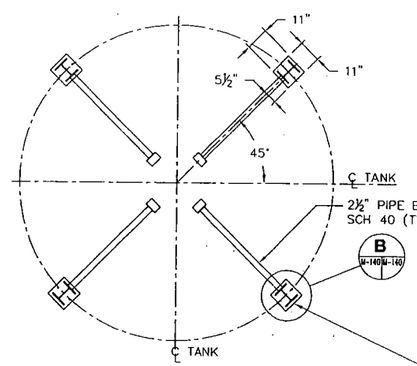

TANK SUPPORT LEG ARRANGEMENT

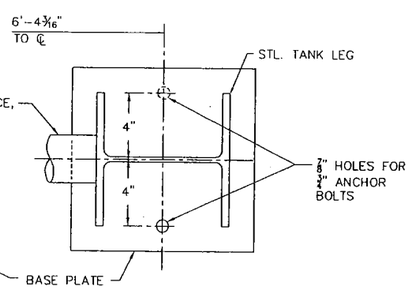

BASE PLATE DETAIL

B M-140/M-140

SCALE: NONE

GENERAL NOTES:

1. DESIGN AND CONSTRUCTION TO BE IN ACCORDANCE WITH THE LATEST EDITION OF API 650 AND AWS D1.1.
2. UNLESS OTHERWISE NOTED, ALL FLANGE BOLT HOLES SHALL STRADDLE VESSEL CENTERLINES.
3. PROTECT ALL OPENINGS WITH COVERS PRIOR TO SHIPPING. PROVIDE PROPER BLOCKING INSIDE VESSEL TO PROTECT DURING SHIPMENT. USE SLINGS TO LIFT VESSEL.
4. 6" NOZZLE PROJECTIONS UNLESS OTHERWISE NOTED.
5. BASELINE FOR NOZZLE SCHEDULE ELEVATIONS IS THE BOTTOM OF BASE PLATE.
6. LADDER, PLATFORM, CENTER WELL, CLARIFIED WATER COLLECTION PIPING AND COLLECTOR PIPE SUPPORTS TO BE SHIPPED LOOSE FOR FIELD INSTALLATION.
7. SHELL THICKNESS PER API-650.
8. TANK LEGS AND CROSS-TIES TO BE PAINTED WITH 2-PART EPOXY PRIMER SUITABLE FOR OUTDOOR SERVICE, COLOR=WHITE. LADDER, PLATFORM AND HANDRAIL TO BE PAINTED WITH 2-PART EPOXY PAINT SUITABLE FOR OUTDOOR SERVICE, COLOR=OSHA YELLOW.

PROCESS DESIGN DATA:

FEED	20 GPM
CLARIFIED SUPERNATANT	19.7 GPM
CONCENTRATE	0.3 GPM

REFERENCES:

GENERAL ARRANGEMENT	M-1
P&ID BACKWASH RECOVERY SYSTEM	PID-8
CLARIFIER T-802 INTERNAL ASSEMBLY DETAILS	M-141

0 32 64 INCHES

REV	DATE	DESCRIPTION OF REVISION	REVISED BY	CHECKED
△				
△				
△				
△	3-19-04	ISSUED FOR CONSTRUCTION	DL	SF
△	3-10-04	ISSUED FOR FOUNDATION DESIGN	DL	KC

THIS IS A COMPUTER GENERATED DRAWING AND ONLY EDITS CONSISTENT WITH SHAW'S ORIGINAL CAD FORMAT SHALL BE CONSIDERED VALID COPIES.

NASA-JET PROPULSION LABORATORY
OU-1 TREATMENT SYSTEM, PASADENA, CA

ARRANGEMENT DRAWING
CLARIFIER
T-802
12'-0" O.D. x 21'-9" O.A.H.

DRAWING SCALE	3/8"=1'-0"
DESIGNED BY/DATE	KC/03-02-04
DRAWN BY/DATE	DL/03-03-04
CHECKED BY/DATE	RL/03-10-04
SHEET SIZE	D
REVISION	0
SHEET 1 OF 1	
DRAWING #	M-140
FILE #	100770M140-0

U.S. PATENTS 5750028, 5788842 AND PATENTS PENDING.

Shaw® Shaw Environmental, Inc.
Lawrenceville, N.J. 609-936-9300

ALL INFORMATION CONTAINED ON THIS DOCUMENT IS THE PROPERTY OF SHAW ENVIRONMENTAL, INC. ("SEI") AND/OR ITS AFFILIATES. THE DESIGN CONCEPTS AND INFORMATION CONTAINED HEREIN ARE PROPERTY OF SEI AND ARE SUBMITTED IN CONFIDENCE. THEY ARE NOT TRANSFERABLE AND MUST BE USED ONLY FOR THE USE AND PROJECT FOR WHICH THE DOCUMENT IS EXPRESSLY SUBMITTED. THEY MUST NOT BE DISCLOSED, REPRODUCED, LOANED OR USED IN ANY OTHER MANNER WITHOUT THE EXPRESS WRITTEN CONSENT OF SEI. SEI ASSUMES NO RESPONSIBILITY OR LIABILITY FOR THE USE THIS DOCUMENT OR THE DESIGN CONCEPTS AND INFORMATION CONTAINED HEREIN FOR ANOTHER PROJECT, OR IN A MANNER THAT DOES NOT RELATE TO THE ORIGINALLY INTENDED USE OF THIS DOCUMENT. IN NO EVENT SHALL THIS DOCUMENT OR THE DESIGN CONCEPTS AND INFORMATION CONTAINED HEREIN BE USED IN ANY MANNER DETRIMENTAL TO THE INTEREST OF SEI. THE RIGHTS AND OBLIGATIONS OF SEI AND ITS CUSTOMER ARE FURTHER LIMITED IN THE AGREEMENT BETWEEN THEM FOR THIS PROJECT. ALL PATENT AND OTHER RIGHTS ARE RESERVED. ACCEPTANCE OF THE DELIVERY OF THIS DOCUMENT CONSTITUTES AGREEMENT TO THESE TERMS AND CONDITIONS.

LAST EDITED: 3-18-04 @ LAWRENCEVILLE | OPERATOR: DL | PROJECT #: 100770 | PROJECT NAME: JPL-CA

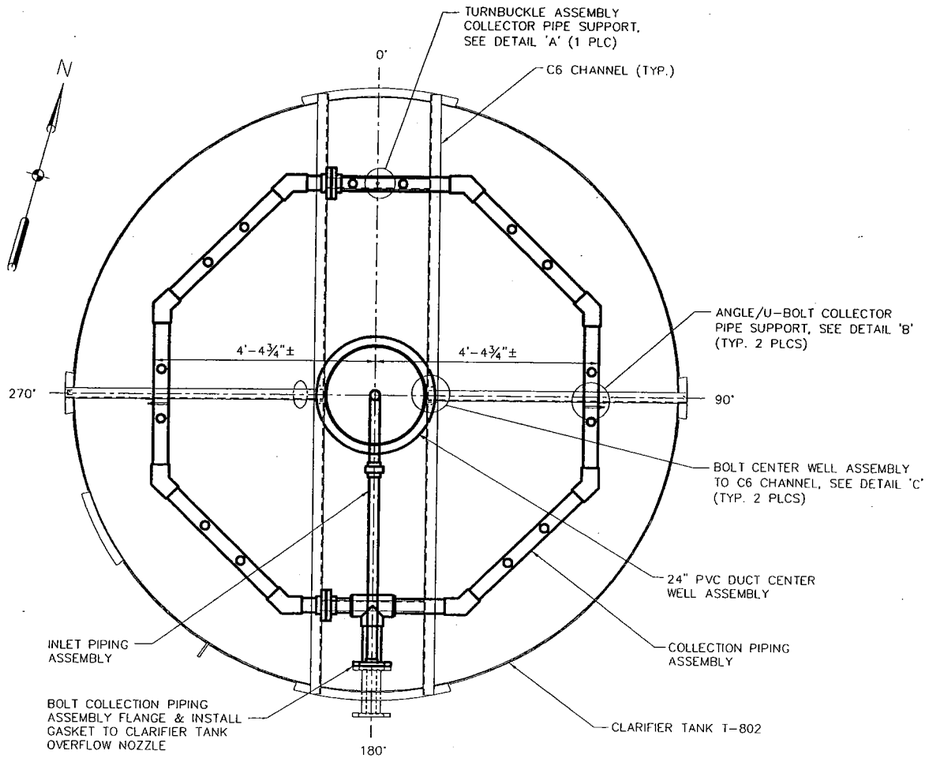

PLAN VIEW

TRUE ORIENTATION

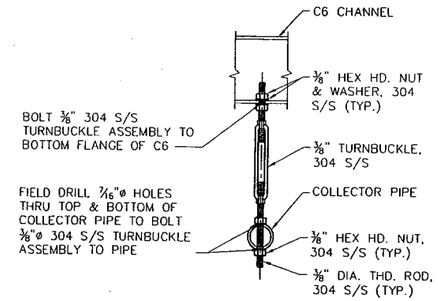

DETAIL A

U-141 | U-141

SCALE: NONE
(1 PLC)

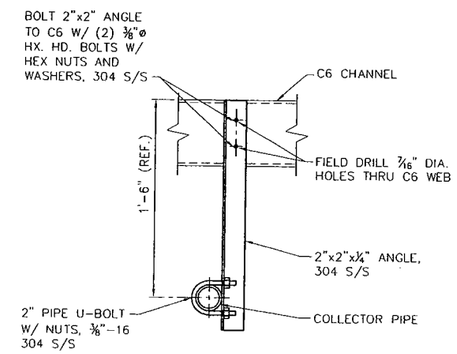

TYP. DETAIL B

U-141 | U-141

SCALE: NONE
(2 PLCS)

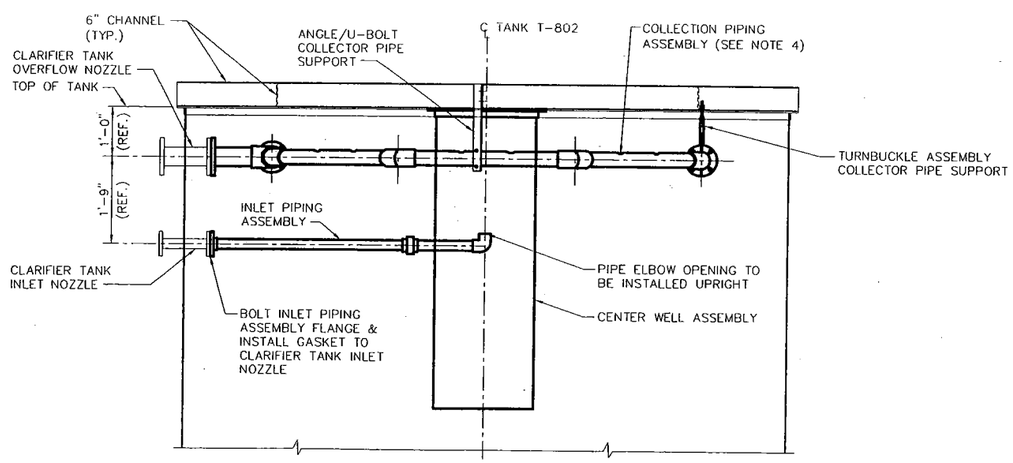

ELEVATION VIEW

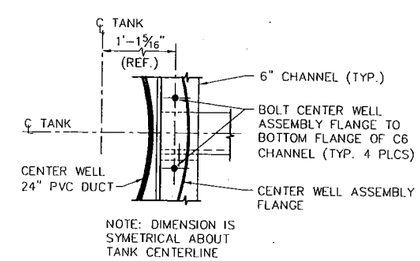

NOTE: DIMENSION IS SYMETRICAL ABOUT TANK CENTERLINE

TYP. DETAIL C

U-141 | U-141

SCALE: NONE

GENERAL NOTES:

1. SCALE: ¾"=1'-0" UNLESS NOTED OTHERWISE.
2. INLET WATER PIPING, CENTER WELL, CLARIFIED WATER COLLECTION PIPING AND COLLECTOR PIPE SUPPORTS TO BE SHIPPED LOOSE BY OTHERS FOR FIELD INSTALLATION BY CONTRACTOR.
3. UNLESS OTHERWISE NOTED, ALL FLANGE BOLT HOLES SHALL STRADDLE NOZZLE OR PIPE CENTERLINES.
4. OPENINGS ALONG TOP OF COLLECTION PIPING ASSEMBLY TO BE LEVEL WITHIN ⅛".

REFERENCE:

CLARIFIER T-802 ARRANGEMENT M-140

0 16 32
INCHES

REV	DATE	DESCRIPTION OF REVISION	REVISED BY	CHECKED
△				
△				
△				
△				
△	3-19-04	ISSUED FOR CONSTRUCTION	DL	SF

THIS IS A COMPUTER GENERATED DRAWING AND ONLY EDITS CONSISTENT WITH SHAW'S ORIGINAL CAD FORMAT SHALL BE CONSIDERED VALID COPIES.

NASA-JET PROPULSION LABORATORY
OU-1 TREATMENT SYSTEM, PASADENA, CA

DETAILS
INTERNAL ASSEMBLY
CLARIFIER T-802

DRAWING SCALE	AS NOTED
DESIGNED BY/DATE	KC/03-02-04
DRAWN BY/DATE	DL/03-05-04
CHECKED BY/DATE	SF/03-17-04
SHEET SIZE	D
REVISION	0
SHEET 1 OF 1	
DRAWING #	M-141
FILE #	100770M141-0

U.S. PATENTS 5750028, 5788842 AND PATENTS PENDING.

Shaw®
Shaw Environmental, Inc.
Lawrenceville, N.J. 609-936-9300

ALL INFORMATION CONTAINED ON THIS DOCUMENT IS THE PROPERTY OF SHAW ENVIRONMENTAL, INC. ("SEI") AND/OR ITS AFFILIATES. THE DESIGN CONCEPTS AND INFORMATION CONTAINED HEREIN ARE PROPERTY OF SEI AND ARE SUBMITTED IN CONFIDENCE. THEY ARE NOT TRANSFERABLE AND MUST BE USED ONLY FOR THE USE AND PROJECT FOR WHICH THE DOCUMENT IS EXPRESSLY SUBMITTED. THEY MUST NOT BE DISCLOSED, REPRODUCED, LOANED OR USED IN ANY OTHER MANNER WITHOUT THE EXPRESS WRITTEN CONSENT OF SEI. SEI ASSUMES NO RESPONSIBILITY OR LIABILITY FOR THE USE THIS DOCUMENT OR THE DESIGN CONCEPTS AND INFORMATION CONTAINED HEREIN FOR ANOTHER PROJECT, OR IN A MANNER THAT DOES NOT RELATE TO THE ORIGINALLY INTENDED USE OF THIS DOCUMENT. IN NO EVENT SHALL THIS DOCUMENT OR THE DESIGN CONCEPTS AND INFORMATION CONTAINED HEREIN BE USED IN ANY MANNER DETRIMENTAL TO THE INTEREST OF SEI. THE RIGHTS AND OBLIGATIONS OF SEI AND ITS CUSTOMER ARE FURTHER LIMITED IN THE AGREEMENT BETWEEN THEM FOR THIS PROJECT. ALL PATENT AND OTHER RIGHTS ARE RESERVED. ACCEPTANCE OF THE DELIVERY OF THIS DOCUMENT CONSTITUTES AGREEMENT TO THESE TERMS AND CONDITIONS.

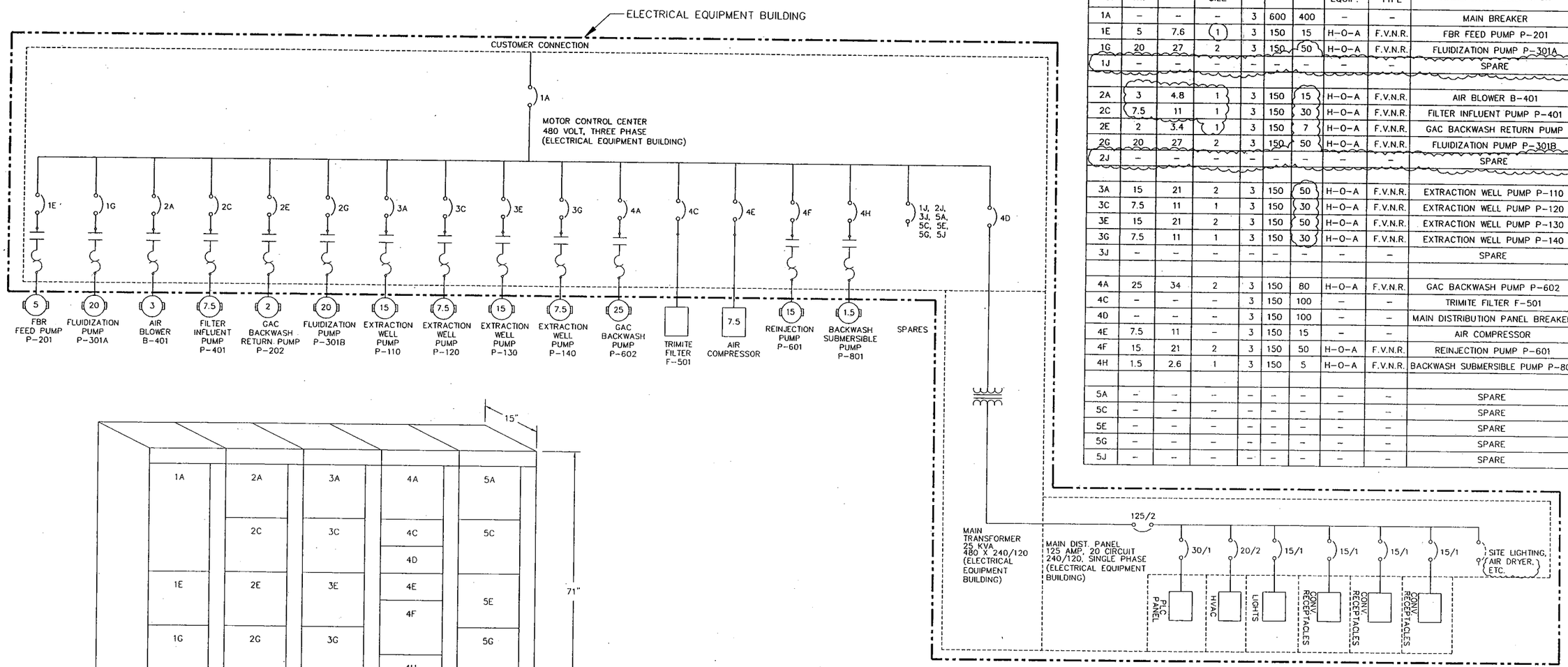

MOTOR CONTROL CENTER SCHEDULE

INCOMING VOLTAGE: 480 VOLTS PHASE: 3 WIRE: 3 HERTZ: 60
MAIN BUS: 600 AMPS
ENCLOSURE: NEMA 1
WIRING: NEMA CLASS 2S TYPE: B GROUND BUS: XX AMPS

COMPT. NO.	HP/ KW	F.L.A.	STARTER SIZE	P'S	C/B	TRIP	AUX. EQUIP.	STR. TYPE	NAMEPLATE DESIGNATION
1A	–	–	–	3	600	400	–	–	MAIN BREAKER
1E	5	7.6	1	3	150	15	H-O-A	F.V.N.R.	FBR FEED PUMP P-201
1G	20	27	2	3	150	50	H-O-A	F.V.N.R.	FLUIDIZATION PUMP P-301A
1J	–	–	–	–	–	–	–	–	SPARE
2A	3	4.8	1	3	150	15	H-O-A	F.V.N.R.	AIR BLOWER B-401
2C	7.5	11	1	3	150	30	H-O-A	F.V.N.R.	FILTER INFLUENT PUMP P-401
2E	2	3.4	1	3	150	7	H-O-A	F.V.N.R.	GAC BACKWASH RETURN PUMP
2G	20	27	2	3	150	50	H-O-A	F.V.N.R.	FLUIDIZATION PUMP P-301B
2J	–	–	–	–	–	–	–	–	SPARE
3A	15	21	2	3	150	50	H-O-A	F.V.N.R.	EXTRACTION WELL PUMP P-110
3C	7.5	11	1	3	150	30	H-O-A	F.V.N.R.	EXTRACTION WELL PUMP P-120
3E	15	21	2	3	150	50	H-O-A	F.V.N.R.	EXTRACTION WELL PUMP P-130
3G	7.5	11	1	3	150	30	H-O-A	F.V.N.R.	EXTRACTION WELL PUMP P-140
3J	–	–	–	–	–	–	–	–	SPARE
4A	25	34	2	3	150	80	H-O-A	F.V.N.R.	GAC BACKWASH PUMP P-602
4C	–	–	–	3	150	100	–	–	TRIMITE FILTER F-501
4D	–	–	–	3	150	100	–	–	MAIN DISTRIBUTION PANEL BREAKER
4E	7.5	11	–	3	150	15	–	–	AIR COMPRESSOR
4F	15	21	2	3	150	50	H-O-A	F.V.N.R.	REINJECTION PUMP P-601
4H	1.5	2.6	1	3	150	5	H-O-A	F.V.N.R.	BACKWASH SUBMERSIBLE PUMP P-801
5A	–	–	–	–	–	–	–	–	SPARE
5C	–	–	–	–	–	–	–	–	SPARE
5E	–	–	–	–	–	–	–	–	SPARE
5G	–	–	–	–	–	–	–	–	SPARE
5J	–	–	–	–	–	–	–	–	SPARE

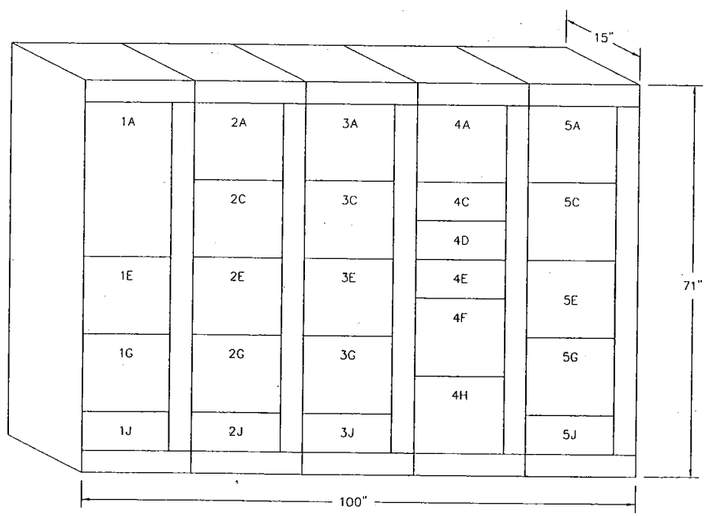

FRONT VIEW
MOTOR CONTROL CENTER MCC-1

NOT TO SCALE

ONE-LINE SCHEMATIC DIAGRAM

NOT TO SCALE

GENERAL NOTES:

1. " -------- " DENOTES EQUIPMENT LIMIT.
2. ALL WIRING OUTSIDE OF "--------" IS BY OTHERS.

REV.	DATE	DESCRIPTION OF REVISION	REVISED BY	CHECKED BY
4				
3	08-02-04	ISSUED FOR CONSTRUCTION	DL	KC
2	3-10-04	ISSUED FOR CONSTRUCTION	LJ	KC
1	2/17/04	ISSUED FOR PROCUREMENT	KC	HS
0	2-5-04	ISSUED FOR INFORMATION	DL	KC

THIS IS A COMPUTER GENERATED DRAWING AND ONLY EDITS CONSISTENT WITH SHAW'S ORIGINAL CAD FORMAT SHALL BE CONSIDERED VALID COPIES.

NASA-JET PROPULSION LABORATORY
OU-1 TREATMENT SYSTEM, PASADENA, CA

ONE-LINE SCHEMATIC
EXTRACTION WELLS AND CARBON
COLUMN FEED SYSTEM

DRAWING SCALE: NONE
DESIGNED BY/DATE: KC/12-4-03
DRAWN BY/DATE: KC/12-8-03
CHECKED BY/DATE: HS
SHEET SIZE: D
REVISION: 1
SHEET 1 OF 1
DRAWING # E-1
FILE # 100770E01-1

U.S. PATENT 6331251 AND PATENTS PENDING.

Shaw® Shaw Environmental, Inc.
Lawrenceville, N.J. 609-936-9300

ALL INFORMATION CONTAINED ON THIS DOCUMENT IS THE PROPERTY OF SHAW ENVIRONMENTAL, INC. ("SEI") AND/OR ITS AFFILIATES. THE DESIGN CONCEPTS AND INFORMATION CONTAINED HEREIN ARE PROPERTY OF SEI AND ARE SUBMITTED IN CONFIDENCE. THEY ARE NOT TRANSFERABLE AND MUST BE USED ONLY FOR THE USE AND PROJECT FOR WHICH THE DOCUMENT IS EXPRESSLY SUBMITTED. THEY MUST NOT BE DISCLOSED, REPRODUCED, LOANED OR USED IN ANY OTHER MANNER WITHOUT THE EXPRESS WRITTEN CONSENT OF SEI. SEI ASSUMES NO RESPONSIBILITY OR LIABILITY FOR THE USE THIS DOCUMENT OR THE DESIGN CONCEPTS AND INFORMATION CONTAINED HEREIN FOR ANOTHER PROJECT, OR IN A MANNER THAT DOES NOT RELATE TO THE ORIGINALLY INTENDED USE OF THIS DOCUMENT. IN NO EVENT SHALL THIS DOCUMENT OR THE DESIGN CONCEPTS AND INFORMATION CONTAINED HEREIN BE USED IN ANY MANNER DETRIMENTAL TO THE INTEREST OF SEI. THE RIGHTS AND OBLIGATIONS OF SEI AND ITS CUSTOMER ARE FURTHER LIMITED IN THE AGREEMENT BETWEEN THEM FOR THIS PROJECT. ALL PATENT AND OTHER RIGHTS ARE RESERVED. ACCEPTANCE OF THE DELIVERY OF THIS DOCUMENT CONSTITUTES AGREEMENT TO THESE TERMS AND CONDITIONS.

LAST EDITED: 08-02-04 ● LAWRENCEVILLE | OPERATOR: CONNOR'S | DL | PROJECT # 100770 | PROJECT NAME: JET PROPULSION LABORATORY

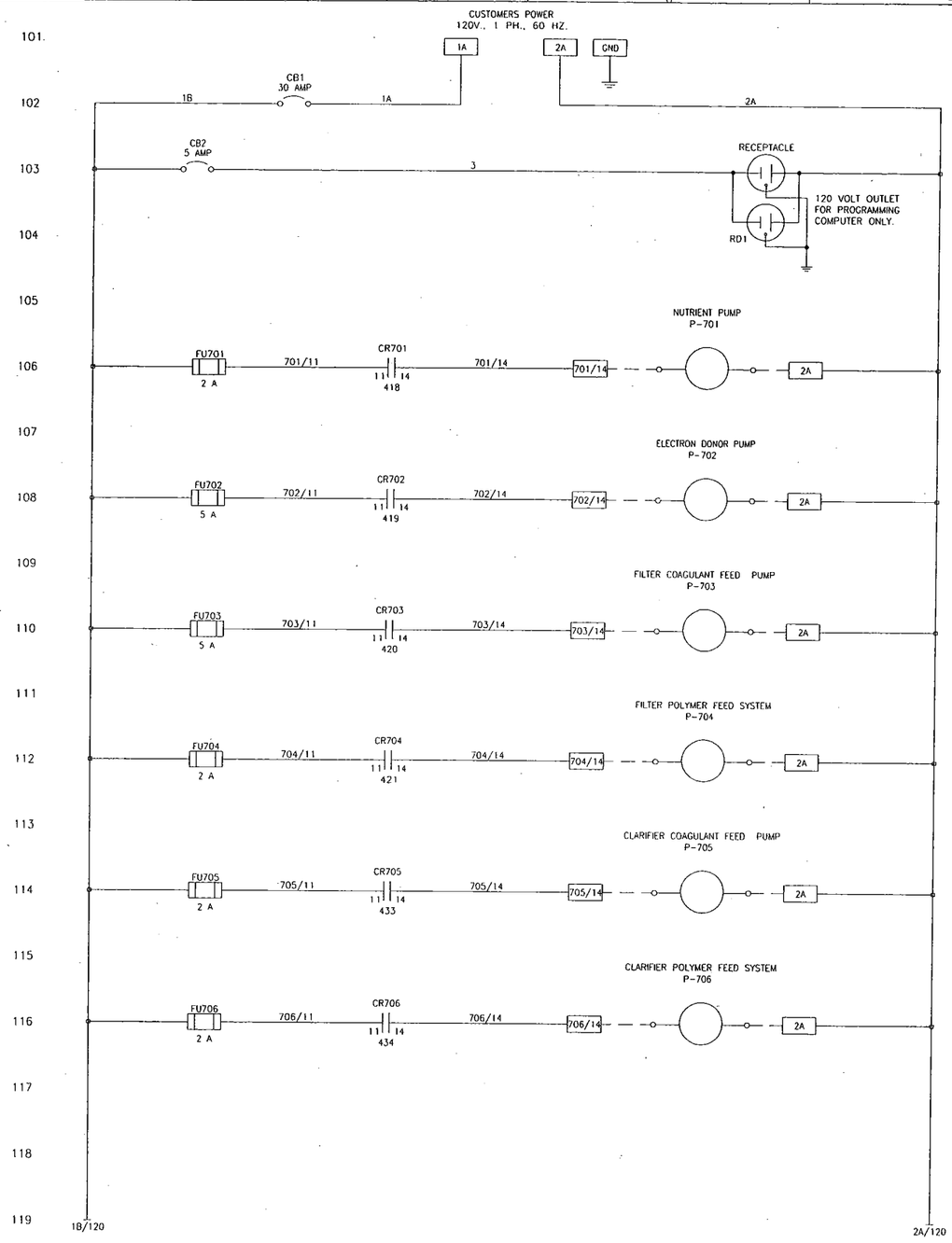

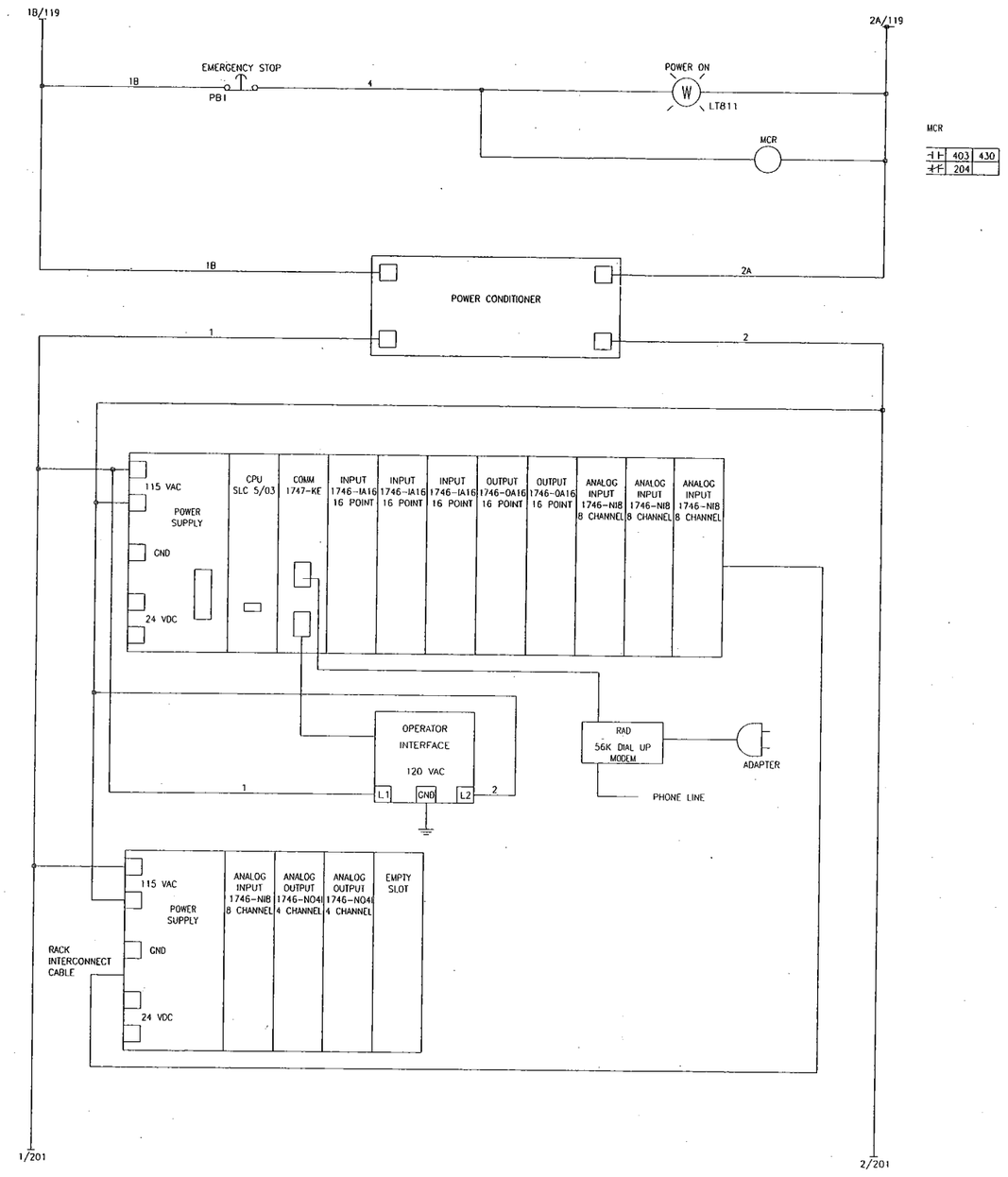

MCR

1	403	430
2	204	

REV	DESCRIPTION	DATE	DWN	CHKD	APVD	ECN
2	ADDED SKID PUMP POWER	04/14/04	ZICK			
1	CHANGES FROM PIDS & INSTUMENTS	03/31/04	ZICK			

COMPANY CONFIDENTIAL
THIS DOCUMENT AND ALL INFORMATION CONTAINED HEREIN ARE THE PROPERTY OF THE USFILTER AND/OR ITS AFFILIATES ("USF"). THE DESIGN CONCEPTS AND INFORMATION CONTAINED HEREIN ARE PROPRIETARY TO USF AND ARE SUBMITTED IN CONFIDENCE. THEY ARE NOT TRANSFERABLE AND MUST BE USED ONLY FOR THE PURPOSE FOR WHICH THE DOCUMENT IS EXPRESSLY LOANED. THEY MUST NOT BE DISCLOSED, REPRODUCED, LOANED OR USED IN ANY OTHER MANNER WITHOUT THE EXPRESS WRITTEN CONSENT OF USF. IN NO EVENT SHALL THEY BE USED IN ANY MANNER DETRIMENTAL TO THE INTEREST OF USF. PATENT RIGHTS ARE RESERVED. UPON THE DEMAND OF USF, THIS DOCUMENT, ALONG WITH ALL COPIES AND EXTRACTS, AND ALL RELATED NOTES AND ANALYSES, MUST BE RETURNED TO USF OR DESTROYED, AS INSTRUCTED BY USF. ACCEPTANCE OF THE DELIVERY OF THIS DOCUMENT CONSTITUTES AGREEMENT TO THESE TERMS AND CONDITIONS.

DESIGNER ZICK	DATE 02/23/04	TITLE ELECTRICAL SCHEMATIC FOR FLUID BED
CHECKER	DATE	
ENGINEER ZICK	DATE	CLIENT JET PROPULSION LAB PASADENA, CA
MANAGER	DATE	USFilter Envirex Products Waukesha, WI 800-524-6324
FILE:		
SCALE: NONE		

PROJECT	CODE	DRAWING	SHEET	REV
41074-04	4034	41074-894-1	1 OF 1	2

STD: 2-0200-24x36D1 | MADE FROM: | BAR = 1" AT PLOT SCALE

Plot Date: 05/25/04

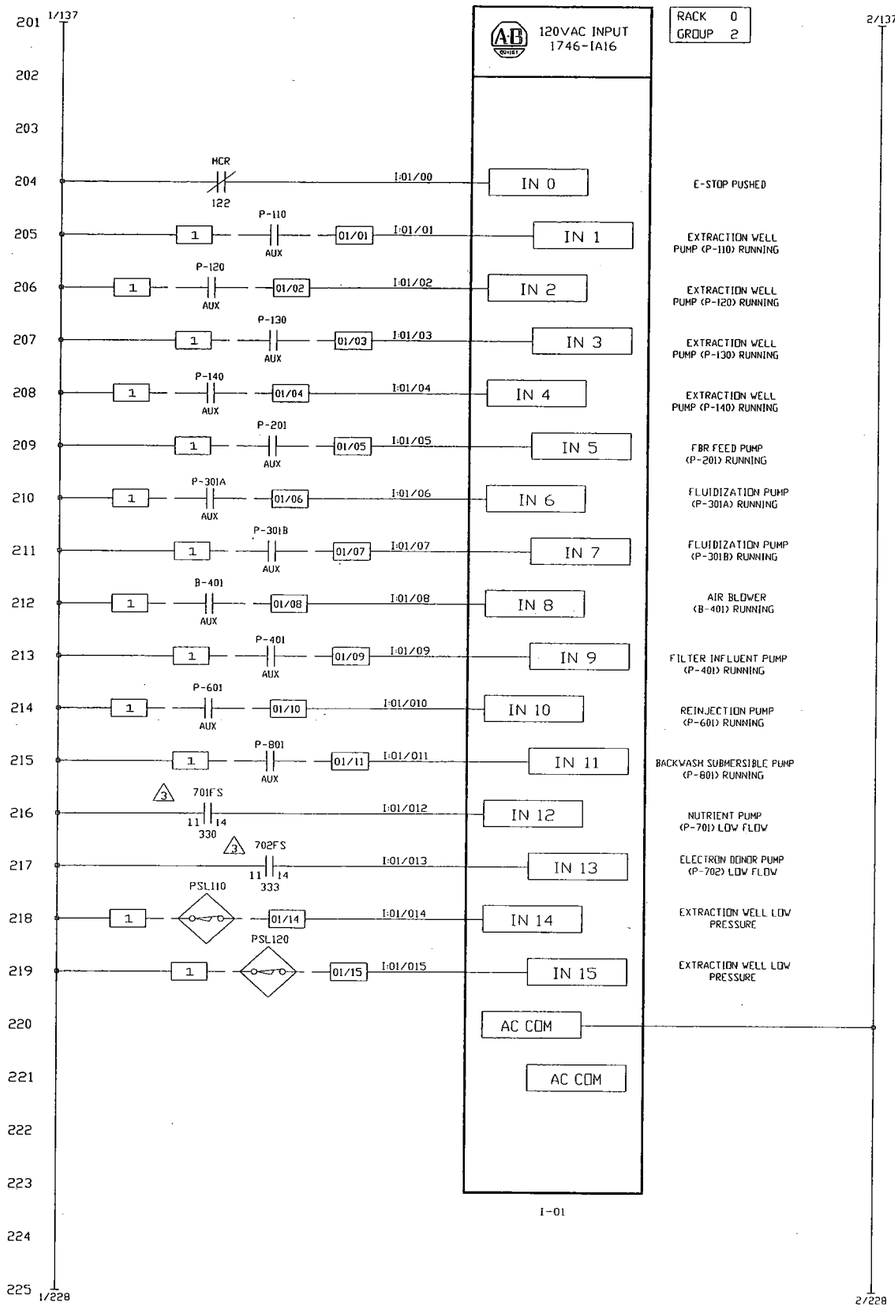

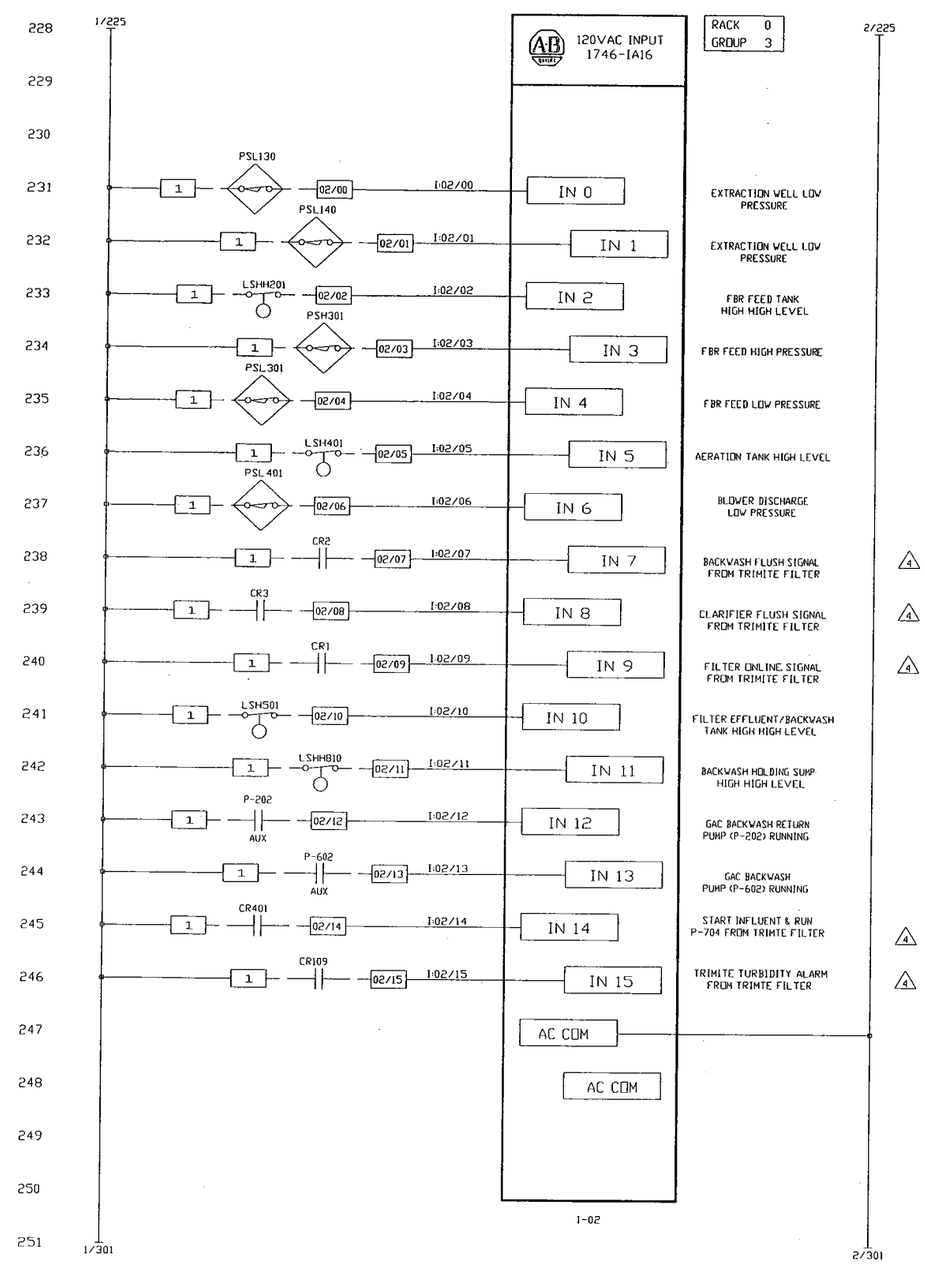

REV	DESCRIPTION	DATE	DWN	CHKD	APVD	ECN
4	CHANGES FROM CONFERENCE CALL	05/21/04	ZICK			
3	LMI PUMP FLOW SWITCHES CORRECTED	04/15/04	ZICK			
2	CORRECTED LABELING	04/14/04	ZICK			
1	CHANGES FROM PIDS & INSTUMENTS	03/31/04	ZICK			

COMPANY CONFIDENTIAL
THIS DOCUMENT AND ALL INFORMATION CONTAINED HEREIN ARE THE PROPERTY OF THE USFILTER AND/OR ITS AFFILIATES ("USF"). THE DESIGN CONCEPTS AND INFORMATION CONTAINED HEREIN ARE PROPRIETARY TO USF AND ARE SUBMITTED IN CONFIDENCE. THEY ARE NOT TRANSFERABLE AND MUST BE USED ONLY FOR THE PURPOSE FOR WHICH THE DOCUMENT IS EXPRESSLY LOANED. THEY MUST NOT BE DISCLOSED, REPRODUCED, LOANED OR USED IN ANY OTHER MANNER WITHOUT THE EXPRESS WRITTEN CONSENT OF USF. IN NO EVENT SHALL THEY BE USED IN ANY MANNER DETRIMENTAL TO THE INTEREST OF USF. ALL PATENT RIGHTS ARE RESERVED. UPON THE DEMAND OF USF, THIS DOCUMENT, ALONG WITH ALL COPIES AND EXTRACTS, AND ALL RELATED NOTES AND ANALYSES, MUST BE RETURNED TO USF OR DESTROYED, AS INSTRUCTED BY USF. ACCEPTANCE OF THE DELIVERY OF THIS DOCUMENT CONSTITUTES AGREEMENT TO THESE TERMS AND CONDITIONS.

		DATE
DESIGNER	ZICK	02/23/04
CHECKER		DATE
ENGINEER	ZICK	DATE
MANAGER		DATE
FILE:		
SCALE:	NONE	

TITLE ELECTRICAL SCHEMATIC FOR
FLUID BED

CLIENT JET PROPULSION LAB
PASADENA, CA

USFilter
Envirex Products
Waukesha, WI
800-524-6324

PROJECT	CODE	DRAWING	SHEET	REV
41074-04	4034	41074-894-2	1 OF 1	4

SID: 2-0200-24x36D1 | MADE FROM: | BAR = 1" AT PLOT SCALE

Plot Date:05/25/04

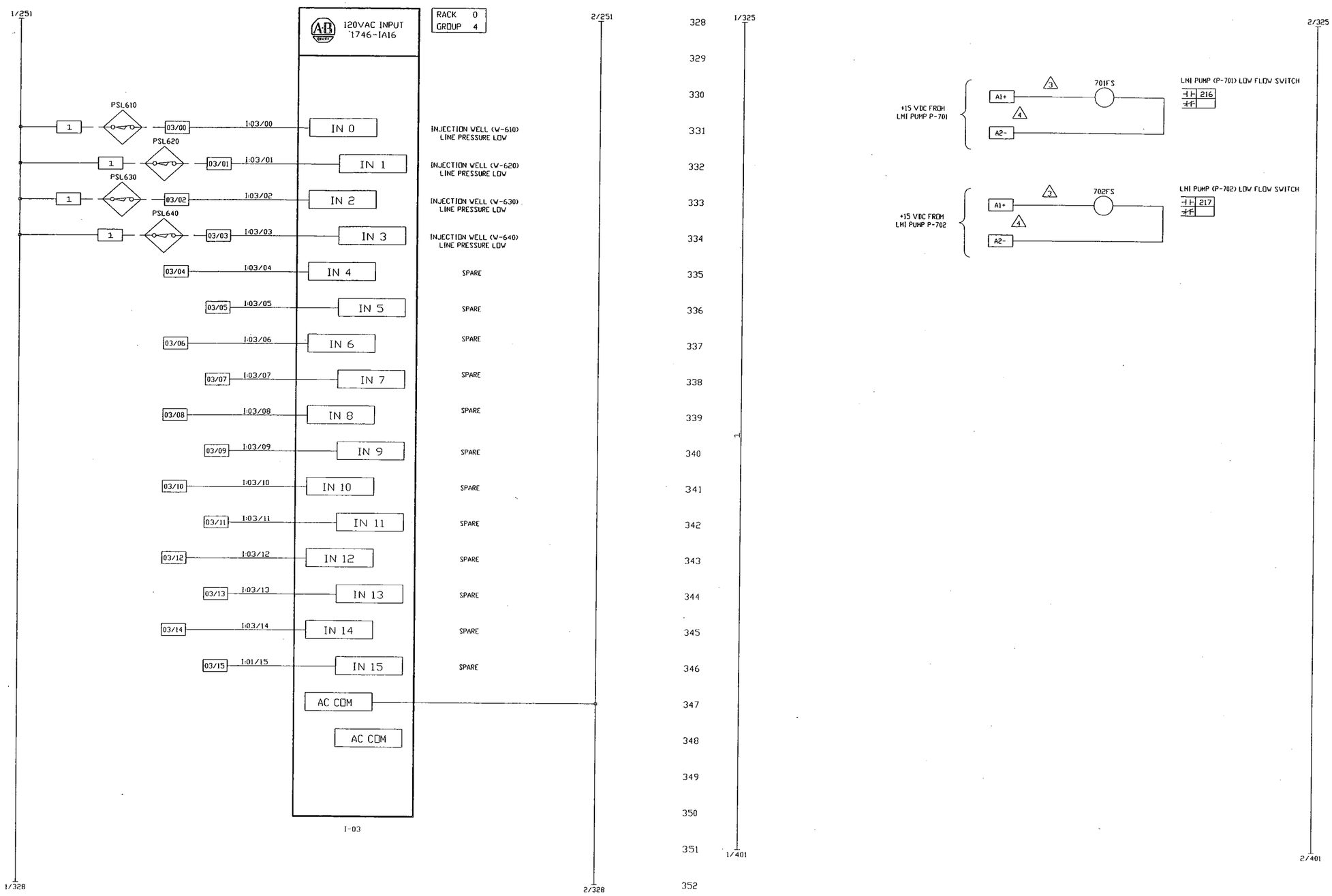

REV	DESCRIPTION	DATE	DWN	CHKD	APVD	ECN
4	MODIFIED LMI PUMP FLOW SWITCH TERMINALS	05/21/04	ZICK			
3	LMI PUMP FLOW SWITCHES CORRECTED	04/15/04	ZICK			
2	CORRECTED LABELING	04/14/04	ZICK			
1	CHANGES FROM PIDS & INSTUMENTS	03/31/04	ZICK			

COMPANY CONFIDENTIAL
THIS DOCUMENT AND ALL INFORMATION CONTAINED HEREIN ARE THE PROPERTY OF THE USFILTER AND/OR ITS AFFILIATES ("USF"). THE DESIGN CONCEPTS AND INFORMATION CONTAINED HEREIN ARE PROPRIETARY TO USF AND ARE SUBMITTED IN CONFIDENCE. THEY ARE NOT TRANSFERABLE AND MUST BE USED ONLY FOR THE PURPOSE FOR WHICH THE DOCUMENT IS EXPRESSLY LOANED. THEY MUST NOT BE DISCLOSED, REPRODUCED, LOANED OR USED IN ANY OTHER MANNER WITHOUT THE EXPRESS WRITTEN CONSENT OF USF. IN NO EVENT SHALL THEY BE USED IN ANY MANNER DETRIMENTAL TO THE INTEREST OF USF. ALL PATENT RIGHTS ARE RESERVED. UPON THE DEMAND OF USF, THIS DOCUMENT, ALONG WITH ALL COPIES AND EXTRACTS, AND ALL RELATED NOTES AND ANALYSES, MUST BE RETURNED TO USF OR DESTROYED, AS INSTRUCTED BY USF. ACCEPTANCE OF THE DELIVERY OF THIS DOCUMENT CONSTITUTES AGREEMENT TO THESE TERMS AND CONDITIONS.

DESIGNER	ZICK	DATE 02/23/04
CHECKER		DATE
ENGINEER	ZICK	DATE
MANAGER		DATE
FILE:		
SCALE:	NONE	

TITLE ELECTRICAL SCHEMATIC FOR FLUID BED

CLIENT JET PROPULSION LAB
PASADENA, CA

USFilter
Envirex Products
Waukesha, WI
800-524-6324

PROJECT	CODE	DRAWING	SHEET	REV
41074-04	4034	41074-894-3	1 OF 1	4

STD: 2-0200-24x36D1 | MADE FROM: | BAR = 1" AT PLOT SCALE

Plot Date:05/25/04

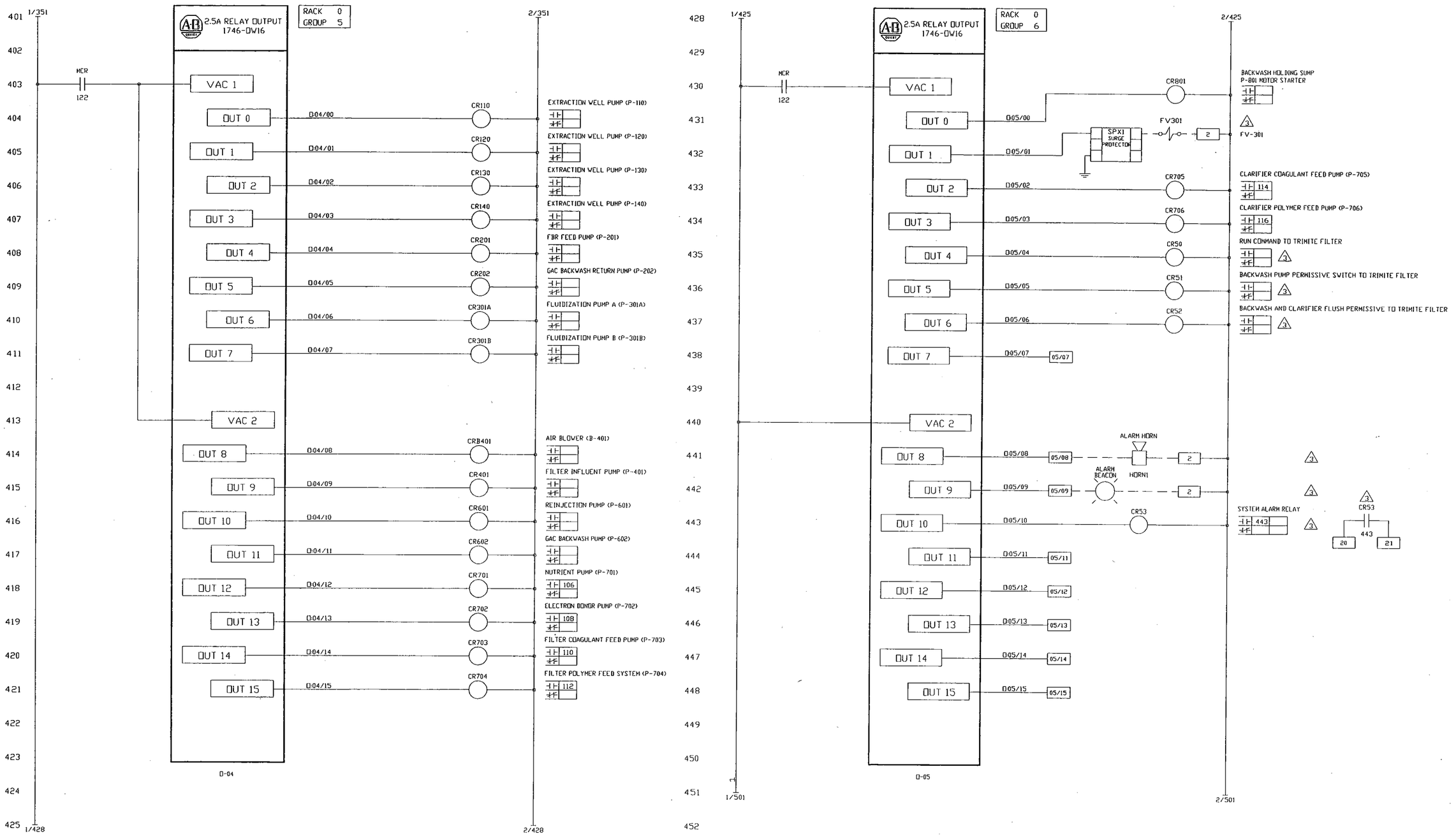

REV	DESCRIPTION	DATE	DWN	CHKD	APVD	ECN
3	ADDED ALARM INDICATORS & TRIMITE RELAYS	05/21/04	ZICK			
2	ADDED P-703 & P-704	04/14/04	ZICK			
1	CHANGES FROM PIDS & INSTUMENTS	03/31/04	ZICK			

COMPANY CONFIDENTIAL
THIS DOCUMENT AND ALL INFORMATION CONTAINED HEREIN ARE THE PROPERTY OF THE USFILTER AND/OR ITS AFFILIATES (USF'S). THE DESIGN CONCEPTS AND INFORMATION CONTAINED HEREIN ARE PROPRIETARY TO USF AND ARE SUBMITTED IN CONFIDENCE. THEY ARE NOT TRANSFERABLE AND MUST BE USED ONLY FOR THE PURPOSE FOR WHICH THE DOCUMENT IS EXPRESSLY LOANED. THEY MUST NOT BE DISCLOSED, REPRODUCED, LOANED OR USED IN ANY OTHER MANNER WITHOUT THE EXPRESS WRITTEN CONSENT OF USF. IN NO EVENT SHALL THEY BE USED IN ANY MANNER DETRIMENTAL TO THE INTEREST OF USF. ALL PATENT RIGHTS ARE RESERVED. UPON THE DEMAND OF USF, THIS DOCUMENT, ALONG WITH ALL COPIES AND EXTRACTS, AND ALL RELATED NOTES AND ANALYSES, MUST BE RETURNED TO USF OR DESTROYED, AS INSTRUCTED BY USF. ACCEPTANCE OF THE DELIVERY OF THIS DOCUMENT CONSTITUTES AGREEMENT TO THESE TERMS AND CONDITIONS.

		DATE
DESIGNER	ZICK	02/24/04
CHECKER		DATE
ENGINEER	ZICK	DATE
MANAGER		DATE
FILE:		
SCALE:	NONE	

TITLE ELECTRICAL SCHEMATIC FOR FLUID BED

CLIENT JET PROPULSION LAB PASADENA, CA

USFilter Envirex Products Waukesha, WI 800-524-6324

PROJECT	CODE	DRAWING	SHEET	REV
41074-04	4034	41074-894-4	1 OF 1	3

STD: 2-0200-24x36D1 | MADE FROM: | BAR = 1" AT PLOT SCALE

Plot Date:05/25/04

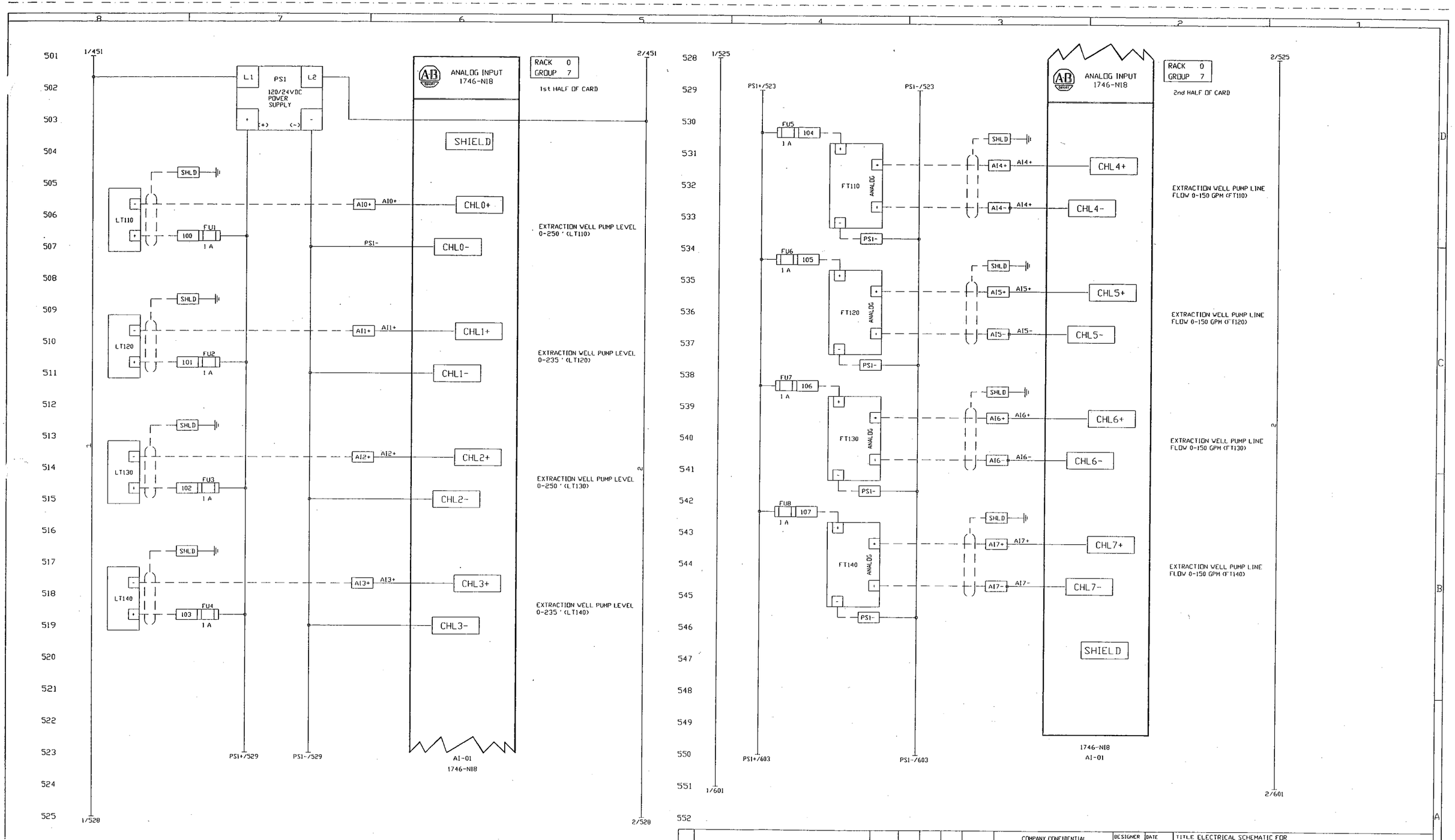

REV	DESCRIPTION	DATE	DWN	CHKD	APVD	CCN
1	CHANGES FROM PIDS & INSTUMENTS	03/31/04	ZICK			

COMPANY CONFIDENTIAL
THIS DOCUMENT AND ALL INFORMATION CONTAINED HEREIN ARE THE PROPERTY OF THE USFILTER AND/OR ITS AFFILIATES ("USF"). THE DESIGN CONCEPTS AND INFORMATION CONTAINED HEREIN ARE PROPRIETARY TO USF AND ARE SUBMITTED IN CONFIDENCE. THEY ARE NOT TRANSFERABLE AND MUST BE USED ONLY FOR THE PURPOSE FOR WHICH THE DOCUMENT IS EXPRESSLY LOANED. THEY MUST NOT BE DISCLOSED, REPRODUCED, LOANED OR USED IN ANY OTHER MANNER WITHOUT THE EXPRESS WRITTEN CONSENT OF USF. IN NO EVENT SHALL THEY BE USED IN ANY MANNER DETRIMENTAL TO THE INTEREST OF USF. ALL PATENT RIGHTS ARE RESERVED. UPON THE DEMAND OF USF, THIS DOCUMENT, ALONG WITH ALL COPIES AND EXTRACTS, AND ALL RELATED NOTES AND ANALYSES, MUST BE RETURNED TO USF OR DESTROYED, AS INSTRUCTED BY USF. ACCEPTANCE OF THE DELIVERY OF THIS DOCUMENT CONSTITUTES AGREEMENT TO THESE TERMS AND CONDITIONS.

DESIGNER	ZICK	DATE 02/23/04
CHECKER		DATE
ENGINEER	ZICK	DATE
MANAGER		DATE
FILE:		
SCALE:	NONE	

TITLE ELECTRICAL SCHEMATIC FOR FLUID BED

CLIENT JET PROPULSION LAB PASADENA, CA

USFilter

Envirex Products
Waukesha, WI
800-524-6324

PROJECT	CODE	DRAWING	SHEET	REV
41074-04	4034	41074-894-5	1 OF 1	1

STD: 2-0200-24x36D1 | MADE FROM: | BAR = 1" AT PLOT SCALE

Plot Date:05/25/04

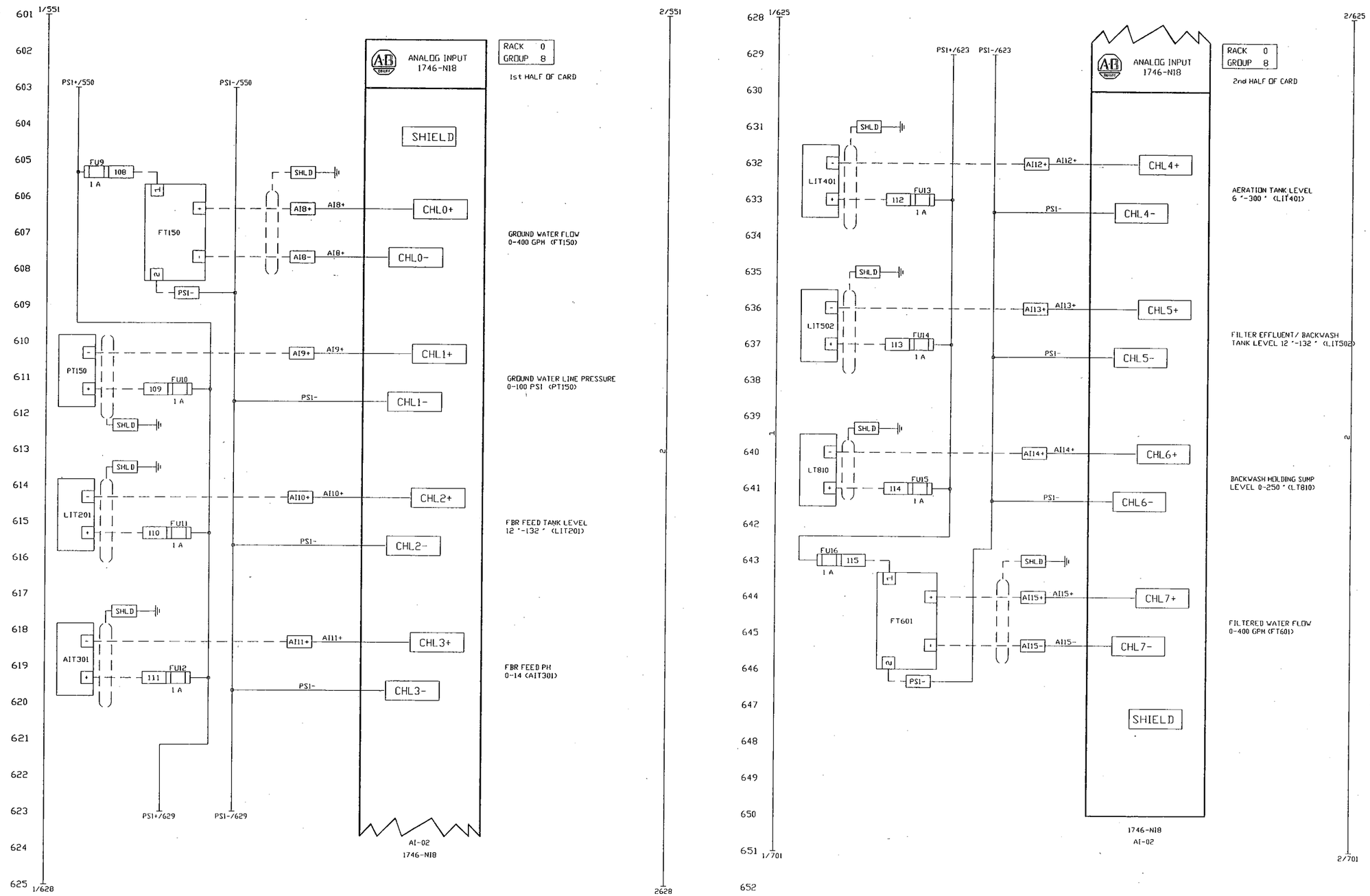

REV	DESCRIPTION	DATE	DWN	CHKD	APVD	ECN
1	CHANGES FROM PIDS & INSTUMENTS	03/31/04	ZICK			

COMPANY CONFIDENTIAL
THIS DOCUMENT AND ALL INFORMATION CONTAINED HEREIN ARE THE PROPERTY OF THE USFILTER AND/OR ITS AFFILIATES ("USF"). THE DESIGN CONCEPTS AND INFORMATION CONTAINED HEREIN ARE PROPRIETARY TO USF AND ARE SUBMITTED IN CONFIDENCE. THEY ARE NOT TRANSFERABLE AND MUST BE USED ONLY FOR THE PURPOSE FOR WHICH THE DOCUMENT IS EXPRESSLY LOANED. THEY MUST NOT BE DISCLOSED, REPRODUCED, LOANED OR USED IN ANY OTHER MANNER WITHOUT THE EXPRESS WRITTEN CONSENT OF USF. IN NO EVENT SHALL THEY BE USED IN ANY MANNER DETRIMENTAL TO THE INTEREST OF USF. ALL PATENT RIGHTS ARE RESERVED. UPON THE DEMAND OF USF, THIS DOCUMENT, ALONG WITH ALL COPIES AND EXTRACTS, AND ALL RELATED NOTES AND ANALYSES, MUST BE RETURNED TO USF OR DESTROYED, AS INSTRUCTED BY USF. ACCEPTANCE OF THE DELIVERY OF THIS DOCUMENT CONSTITUTES AGREEMENT TO THESE TERMS AND CONDITIONS.

DESIGNER ZICK	DATE 02/24/04	TITLE ELECTRICAL SCHEMATIC FOR FLUID BED
CHECKER	DATE	CLIENT JET PROPULSION LAB PASADENA, CA
ENGINEER ZICK	DATE	
MANAGER	DATE	USFilter Envirex Products Waukesha, WI 800-524-6324
FILE:		
SCALE: NONE		

PROJECT	CODE	DRAWING	SHEET	REV
41074-04	4034	41074-894-6	1 OF 1	1

STD: 2-0200-24x36DI | MADE FROM: | BAR = 1" AT PLOT SCALE

Plot Date:05/25/04

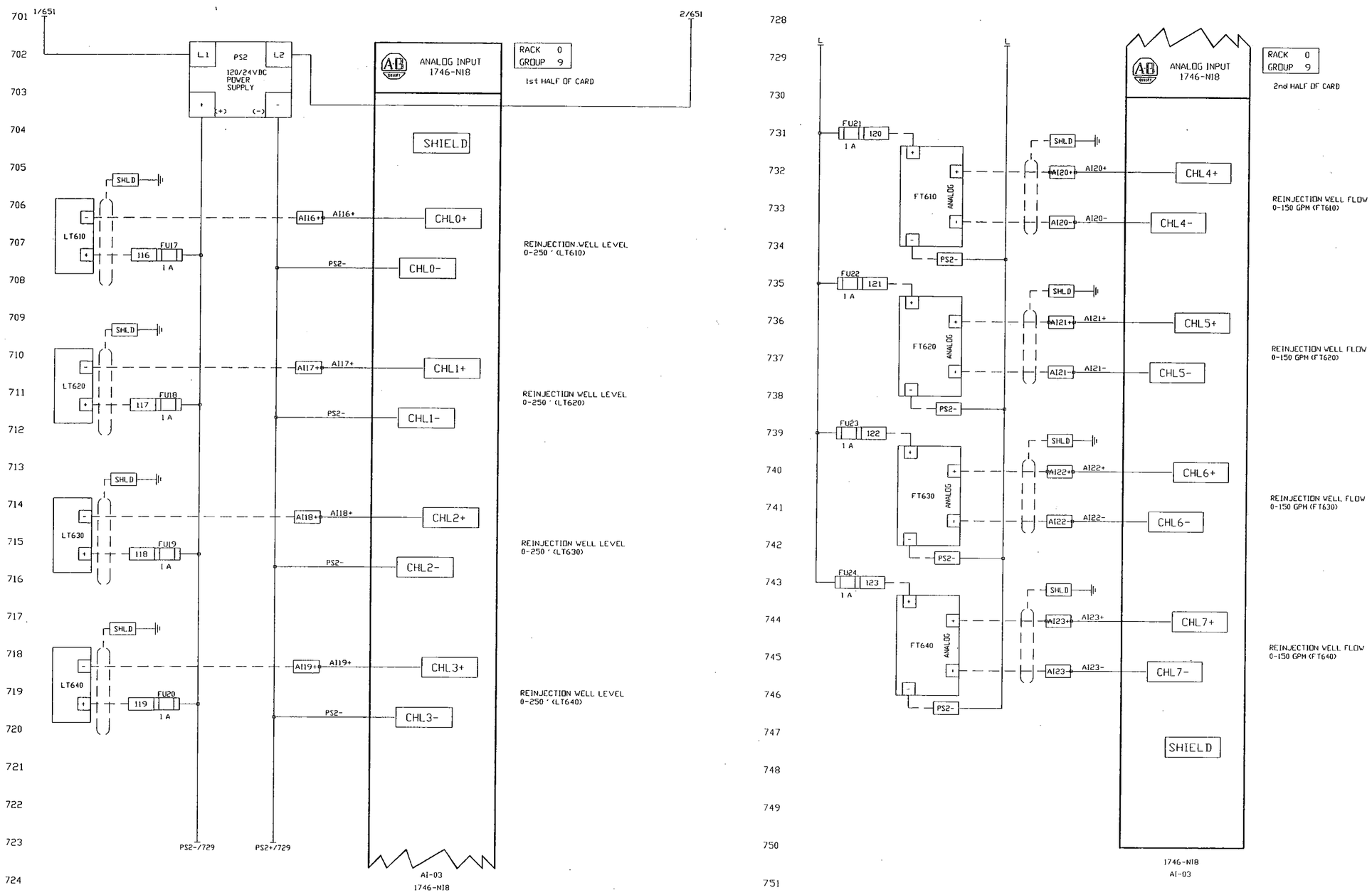

REV	DESCRIPTION	DATE	DWN	CHKD	APVD	ECN
1	CHANGES FROM PIDS & INSTUMENTS	03/31/04	ZICK			

COMPANY CONFIDENTIAL
THIS DOCUMENT AND ALL INFORMATION CONTAINED HEREIN ARE THE PROPERTY OF THE USFILTER AND/OR ITS AFFILIATES ("USF"). THE DESIGN CONCEPTS AND INFORMATION CONTAINED HEREIN ARE PROPRIETARY TO USF AND ARE SUBMITTED IN CONFIDENCE. THEY ARE NOT TRANSFERABLE AND MUST BE USED ONLY FOR THE PURPOSE FOR WHICH THE DOCUMENT IS EXPRESSLY LOANED. THEY MUST NOT BE DISCLOSED, REPRODUCED, LOANED OR USED IN ANY OTHER MANNER WITHOUT THE EXPRESS WRITTEN CONSENT OF USF. IN NO EVENT SHALL THEY BE USED IN ANY MANNER DETRIMENTAL TO THE INTEREST OF USF. ALL PATENT RIGHTS ARE RESERVED. UPON THE DEMAND OF USF, THIS DOCUMENT, ALONG WITH ALL COPIES AND EXTRACTS, AND ALL RELATED NOTES AND ANALYSES, MUST BE RETURNED TO USF OR DESTROYED AS INSTRUCTED BY USF. ACCEPTANCE OF THE DELIVERY OF THIS DOCUMENT CONSTITUTES AGREEMENT TO THESE TERMS AND CONDITIONS.

DESIGNER	ZICK	DATE 02/23/04
CHECKER		DATE
ENGINEER	ZICK	DATE
MANAGER		DATE
FILE:		
SCALE:	NONE	

TITLE ELECTRICAL SCHEMATIC FOR FLUID BED

CLIENT JET PROPULSION LAB
PASADENA, CA

USFilter
Envirex Products
Waukesha, WI
800-524-6324

PROJECT	CODE	DRAWING	SHEET	REV
41074-04	4034	41074-894- 7	1 OF 1	1

STD: 2-0200-24x36D1 | MADE FROM: | BAR = 1" AT PLOT SCALE

Plot Date:05/25/04

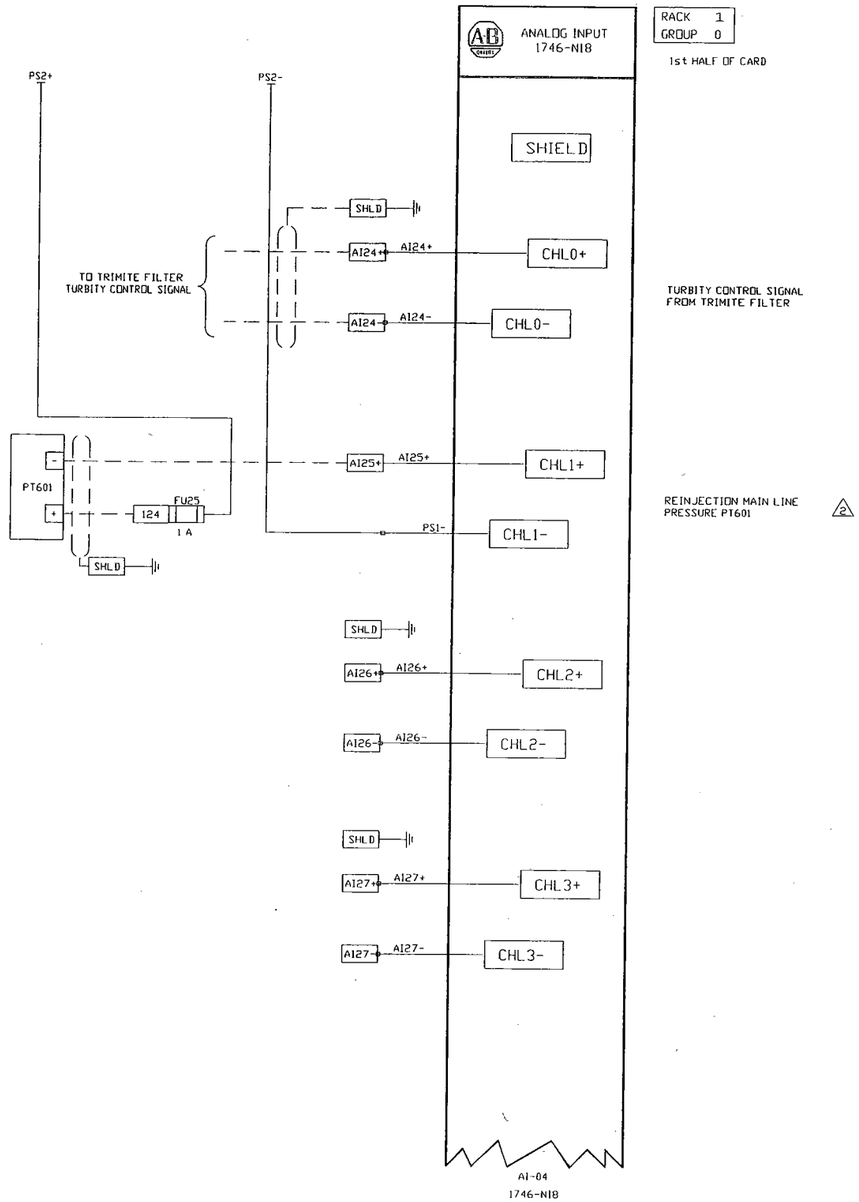

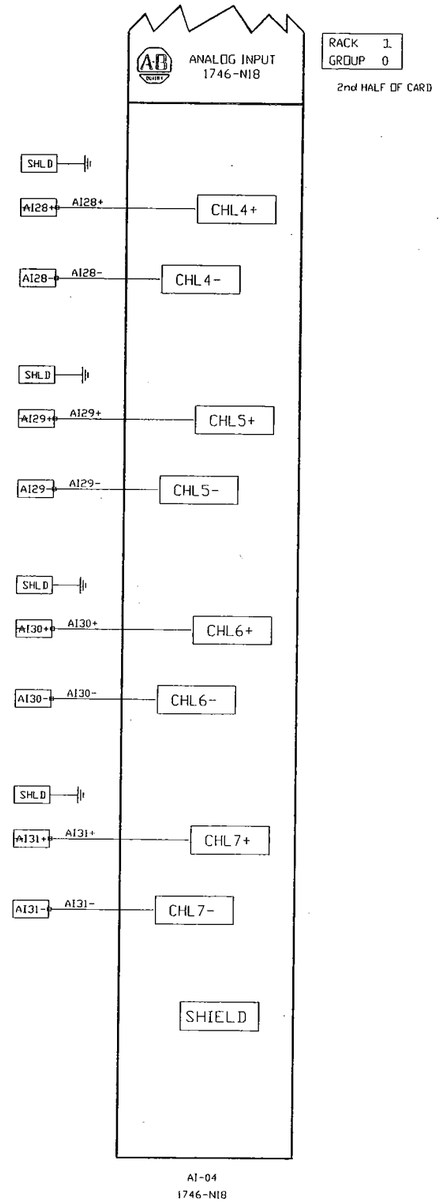

REV	DESCRIPTION	DATE	DWN	CHKD	APVD	CCN
2	ADDED PT601	05/21/04	ZICK			
1	ADDED TURBITY CONTROL SIGNAL	04/14/04	ZICK			

COMPANY CONFIDENTIAL
THIS DOCUMENT AND ALL INFORMATION CONTAINED HEREIN ARE THE PROPERTY OF THE USFILTER AND/OR ITS AFFILIATES ("USF"). THE DESIGN CONCEPTS AND INFORMATION CONTAINED HEREIN ARE PROPRIETARY TO USF AND ARE SUBMITTED IN CONFIDENCE. THEY ARE NOT TRANSFERABLE AND MUST BE USED ONLY FOR THE PURPOSE FOR WHICH THE DOCUMENT IS EXPRESSLY LOANED. THEY MUST NOT BE DISCLOSED, REPRODUCED, LOANED OR USED IN ANY OTHER MANNER WITHOUT THE EXPRESS WRITTEN CONSENT OF USF. IN NO EVENT SHALL THEY BE USED IN ANY MANNER DETRIMENTAL TO THE INTEREST OF USF. ALL PATENT RIGHTS ARE RESERVED. UPON THE DEMAND OF USF, THIS DOCUMENT, ALONG WITH ALL COPIES AND EXTRACTS, AND ALL RELATED NOTES AND ANALYSES, MUST BE RETURNED TO USF OR DESTROYED, AS INSTRUCTED BY USF. ACCEPTANCE OF THE DELIVERY OF THIS DOCUMENT CONSTITUTES AGREEMENT TO THESE TERMS AND CONDITIONS.

DESIGNER ZICK	DATE 04/08/04	TITLE ELECTRICAL SCHEMATIC FOR FLUID BED
CHECKER	DATE	CLIENT JET PROPULSION LAB PASADENA, CA
ENGINEER ZICK	DATE	
MANAGER	DATE	USFilter Envirex Products Waukesha, WI 800-524-6324
FILE:		
SCALE: NONE		

PROJECT	CODE	DRAWING	SHEET	REV
41074-04	4034	41074-894-8	1 OF 1	2

STD: 2-0200-24x36D | MADE FROM: | BAR = 1" AT PLOT SCALE

Plot Date:05/25/04

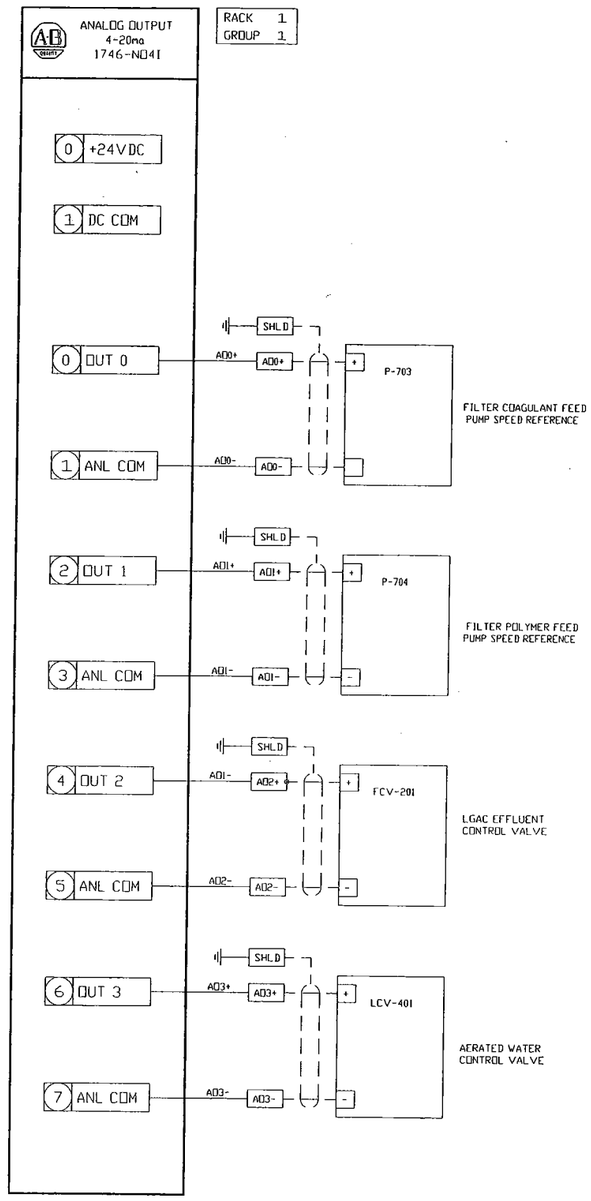

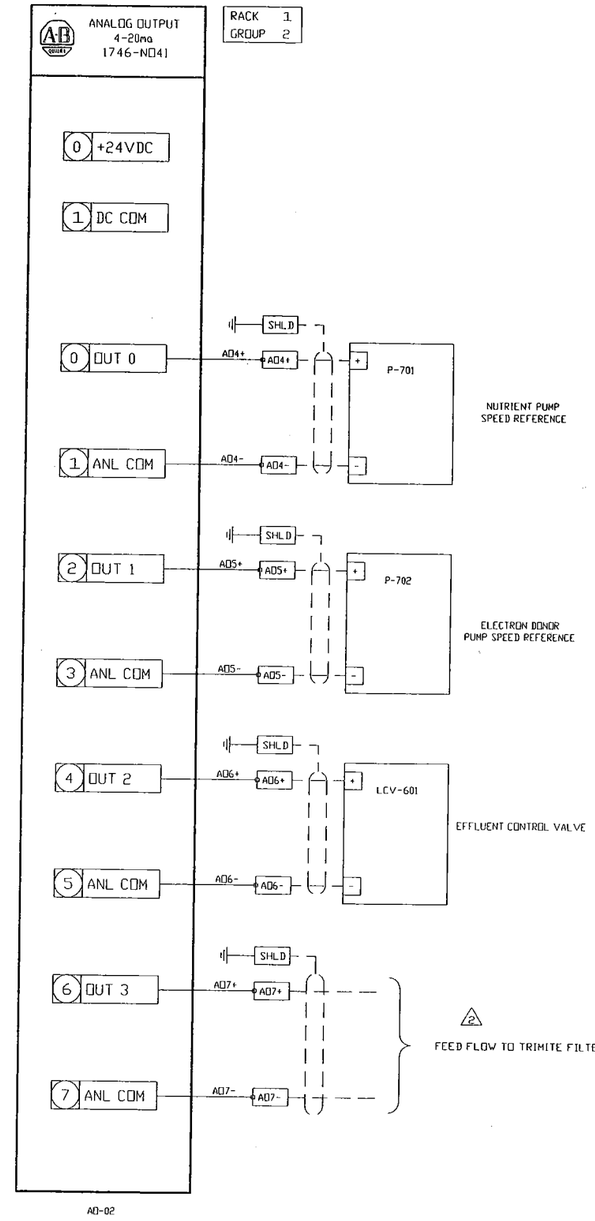

REV	DESCRIPTION	DATE	BVN	CHKD	APVD	ECN
2	CHANGES FROM CONFERENCE CALL	05/21/04	ZICK			
1	CHANGES FROM PIDS & INSTUMENTS	03/31/04	ZICK			

COMPANY CONFIDENTIAL
THIS DOCUMENT AND ALL INFORMATION CONTAINED HEREIN ARE THE PROPERTY OF THE USFILTER AND/OR ITS AFFILIATES ("USF"). THE DESIGN CONCEPTS AND INFORMATION CONTAINED HEREIN ARE PROPRIETARY TO USF AND ARE SUBMITTED IN CONFIDENCE. THEY ARE NOT TRANSFERABLE AND MUST BE USED ONLY FOR THE PURPOSE FOR WHICH THE DOCUMENT IS EXPRESSLY LOANED. THEY MUST NOT BE DISCLOSED, REPRODUCED, LOANED OR USED IN ANY OTHER MANNER WITHOUT THE EXPRESS WRITTEN CONSENT OF USF. IN NO EVENT SHALL THEY BE USED IN ANY MANNER DETRIMENTAL TO THE INTEREST OF USF. ALL PATENT RIGHTS ARE RESERVED. UPON THE DEMAND OF USF, THIS DOCUMENT, ALONG WITH ALL COPIES AND EXTRACTS, AND ALL RELATED NOTES AND ANALYSES, MUST BE RETURNED TO USF OR DESTROYED, AS INSTRUCTED BY USF. ACCEPTANCE OF THE DELIVERY OF THIS DOCUMENT CONSTITUTES AGREEMENT TO THESE TERMS AND CONDITIONS.

DESIGNER	ZICK	DATE 02/23/04
CHECKER		DATE
ENGINEER	ZICK	DATE
MANAGER		DATE
FILE:		
SCALE:	NONE	

TITLE ELECTRICAL SCHEMATIC FOR
FLUID BED

CLIENT JET PROPULSION LAB
PASADENA, CA

USFilter
Envirex Products
Waukesha, WI
800-524-6324

PROJECT	CODE	DRAWING	SHEET	REV
41074-04	4034	41074-894-9	1 OF 1	2

STD: 2-0200-24x36DI | MADE FROM: | BAR = 1" AT PLOT SCALE

Plot Date:05/25/04

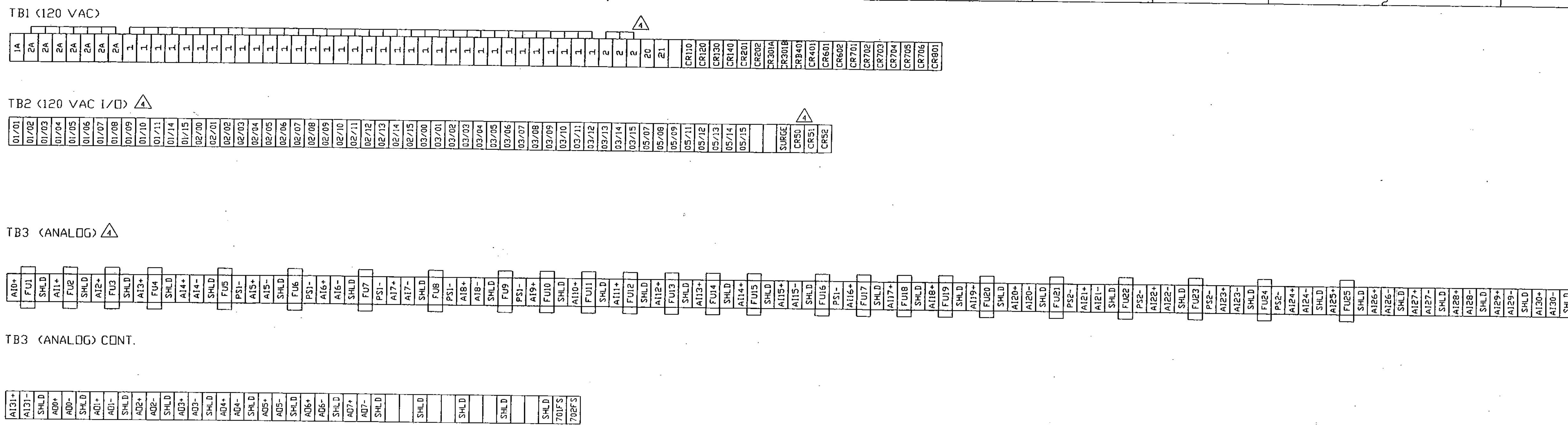

NOTES:

WIRING SPEC:
CONTROL WIRING - No. 14 STANDED MTW - OR EQUAL 600V AT 90 DEG. C.

SIGNAL CABLE - BELDEN 8760 - OR EQUAL

POWER WIRING - SIZE FOR MOTOR CURRENT
No.12 GA STRANDED MTW OR EQUAL 600V AT 90 DEG. C MINIMUM.

INTERCONNECTION WIRING No.14 GA WIRE

ALL HOLES TO BE SEALED AND GASKETED TO MAINTAIN NEMA 4X INTEGRITY.

REV	DESCRIPTION	DATE	DWN	CHKD	APVD	ECN
4	ADDED TRIMITE RELAYS & MODIFIED TB LAYOUT	05/21/04	ZICK			
3	LMI PUMP FLOW SWITCHES CORRECTED	04/15/14	ZICK			
2	ADDED SKID PUMP POWER & ANALOG CARD	04/14/14	ZICK			
1	CHANGES FROM PIDS & INSTUMENTS	03/31/04	ZICK			

COMPANY CONFIDENTIAL
THIS DOCUMENT AND ALL INFORMATION CONTAINED HEREIN ARE THE PROPERTY OF THE USFILTER AND/OR ITS AFFILIATES ("USF"). THE DESIGN CONCEPTS AND INFORMATION CONTAINED HEREIN ARE PROPRIETARY TO USF AND ARE SUBMITTED IN CONFIDENCE. THEY ARE NOT TRANSFERABLE AND MUST BE USED ONLY FOR THE PURPOSE FOR WHICH THE DOCUMENT IS EXPRESSLY LOANED. THEY MUST NOT BE DISCLOSED, REPRODUCED, LOANED OR USED IN ANY OTHER MANNER WITHOUT THE EXPRESS WRITTEN CONSENT OF USF. IN NO EVENT SHALL THEY BE USED IN ANY MANNER DETRIMENTAL TO THE INTEREST OF USF. ALL PATENT RIGHTS ARE RESERVED. UPON THE DEMAND OF USF, THIS DOCUMENT, ALONG WITH ALL COPIES AND EXTRACTS, AND ALL RELATED NOTES AND ANALYSES, MUST BE RETURNED TO USF OR DESTROYED, AS INSTRUCTED BY USF. ACCEPTANCE OF THE DELIVERY OF THIS DOCUMENT CONSTITUTES AGREEMENT TO THESE TERMS AND CONDITIONS.

DESIGNER	ZICK
DATE	02/23/04
CHECKER	
DATE	
ENGINEER	ZICK
DATE	
MANAGER	
DATE	
FILE:	
SCALE:	NONE

TITLE TERMINAL STRIPTS FOR FLUID BED

CLIENT JET PROPULSION LAB
PASADENA, CA

USFilter
Envirex Products
Waukesha, WI
800-524-6324

PROJECT	CODE	DRAWING	SHEET	REV
41074-04	4034	41074-894-10	1 OF 1	4

Plot Date 05/25/04

STD: 2-0200-24x36D1

MADE FROM:

BAR = 1" AT PLOT SCALE

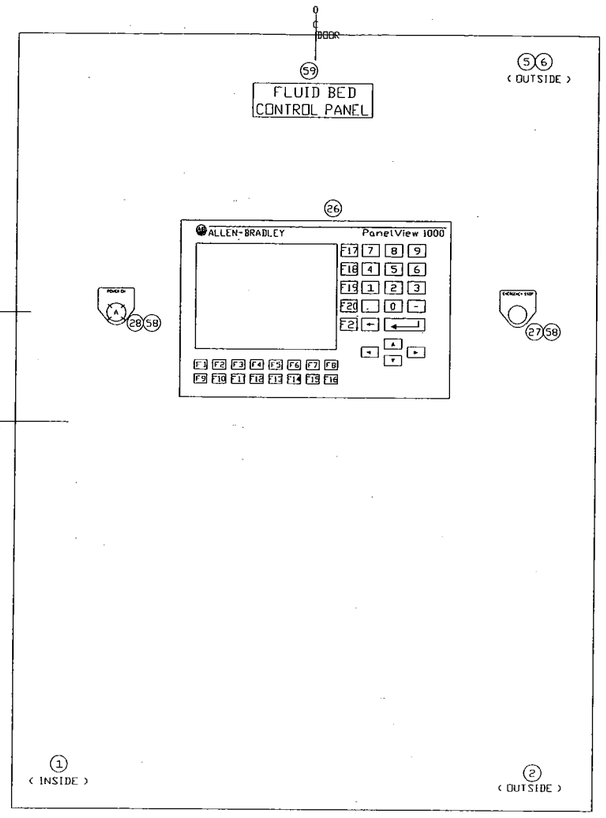

FRONT VIEW OF DOOR

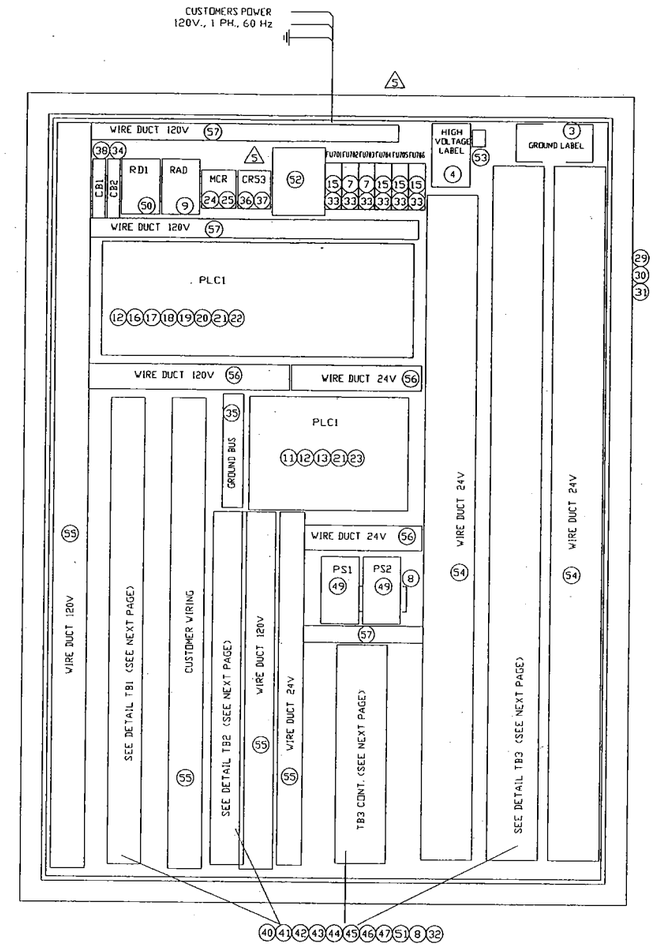

LIST OF COMPONENTS

TITLE: ELECTRICAL CONTROL PANEL

ESTIMATED FINISHED WEIGHT: ALL LENGTHS ARE FINAL LENGTHS UNLESS OTHERWISE SPECIFIED

DRAWING NUMBER: 41074-894-11

PROJECT NUMBER: 41074-04

ADVANCE ORDER	REF. SYMBOL	QUANTITY	PART NUMBER	DESCRIPTION	MANUFACTURER
MATERIAL FOR ONE MK 100					
US	1	1	143-10010-1	SERIAL NUMBER/ DATA LABEL	US-FILTER
US	2	1	143-10011-1	NAMEPLATE	US-FILTER
US	3	1	143-1012-1	GROUND LABEL	US-FILTER
US	4	1	143-1030-1	HIGH VOLTAGE LABEL	US-FILTER
US	5	1	143-1031-1	DISCONNECT POWER LABEL	US-FILTER
US	6	1	143-1032-1	MULTIPLE POWER SOURCE LABEL	US-FILTER
HE	7	2	KP-CC-5	FUSE 5A TIME DELAY 600V DC	BUSSMAN
HE	8	10FT	199-DR1	DIN MOUNTING RAIL	ALLEN-BRADLEY
HE	9	1	9300-RADKIT	MODEM, 56 K DIAL UP	ALLEN-BRADLEY
HE	10	1	1747-C10	CABLE, 6 FT DH-485 TO DH-485	ALLEN-BRADLEY
HE	11	2	1746-P2	PLC POWER SUPPLY	ALLEN-BRADLEY
HE	12	1	1746-A4	CHASSIS, 4-SLOT RACK	ALLEN-BRADLEY
HE	13	2	1746-N2	BLANK SLOT COVER	ALLEN-BRADLEY
HE	14	1	1746-C9	CABLE, RACK CONNECTING	ALLEN-BRADLEY
HE	15	4	KP-CC-2	FUSE 2A TIME DELAY 600V DC	BUSSMAN
HE	16	1	1746-A10	CHASSIS, 10-SLOT RACK	ALLEN-BRADLEY
HE	17	1	1747-L531	CPU, MODEL SLC-5/03	ALLEN-BRADLEY
HE	18	1	1747-M11	MEMORY MODULE EEPROM	ALLEN-BRADLEY
HE	19	1	1747-KE	DH-485/DF1 INTERFACE MODULE	ALLEN-BRADLEY
HE	20	3	1746-IA16	INPUT MODULE 120VAC 16-POINT	ALLEN-BRADLEY
HE	21	4	1746-NI8	ANALOG INPUT MODULE, 8 POINT	ALLEN-BRADLEY
HE	22	2	1746-OA16	OUTPUT MODULE 120VAC 16-POINT	ALLEN-BRADLEY
HE	23	2	1746-NO41	ANALOG OUTPUT MODULE, 4 POINT	ALLEN-BRADLEY
HE	24	1	700-HA33A1-4	RELAY, DPDT / PLUG IN / 120V / 3-POLE	ALLEN-BRADLEY
HE	25	1	700-HN126	SOCKET (11 PIN)	ALLEN-BRADLEY
HE	26	1	2711-K10C3	PANELVIEW 1000, KEYPAD	ALLEN-BRADLEY
HE	27	1	800H-FRXT6D2P	PUSHBUTTON, MUSHROOM HEAD	ALLEN-BRADLEY
HE	28	1	800H-PR16V	PILOT LIGHT, WHITE	ALLEN-BRADLEY
HE	29	1	A-48H3612SSLP	ENCLOSURE, NEMA 4X, 48"x36"x12"	HOFFMAN
HE	30	1	A-48P36	SUBPANEL, 45" x 33"	HOFFMAN
HE	31	4	A-FC4125S	QUICK TURN LATCHES	HOFFMAN
HE	32	28	AGC-1	FUSE 1A FAST ACTING 250V DC	BUSSMAN
HE	33	6	BC6031S	FUSEBLOCK FOR CLASS CC FUSES	BUSSMAN
SE	34	1	9080-GCB50	CIRCUIT BREAKER, 5 AMP 1-POLE 250V	SQUARE-D
SE	35	1	FK-12GTA	GROUND BUS	SQUARE-D
HE	36	1	700-HA32A1-4	RELAY, DPDT / PLUG IN / 120V / 2-POLE	ALLEN-BRADLEY
HE	37	1	700-HN125	SOCKET (8 PIN)	ALLEN-BRADLEY
SE	38	1	QOU130	CIRCUIT BREAKER, 30 AMP 1-POLE 250V	SQUARE-D
	39				
AA	40	19	2967662	RELAY HIGH CURRENT PLC-RSC-120AC/21HC	PHOENIX CONTACT
AA	41	1	2765602	COARSE SURGE PROTECTION TT-SLKK5-F/110A	PHOENIX CONTACT
AA	42	44	0442079	GROUNDING TERMINAL BLOCK TYPE USLKG 6N	PHOENIX CONTACT
AA	43	25	3004171	FUSED TERMINAL BLOCK 600V 50 AMP	PHOENIX CONTACT
AA	44	193	3004524	TERMINAL BLOCK 600V 50 AMP UK6N	PHOENIX CONTACT
AA	45	8	0800886	END ANCHOR	PHOENIX CONTACT
AA	46	5	0203263	TERMINAL JUMPER FIXED BRIDGE 800V	PHOENIX CONTACT
AA	47	4	3003020	TERMINAL END BARRIER	PHOENIX CONTACT
AA	48				
AA	49	2	2938730	POWER SUPPLY, 120VAC/24VDC 2.0 AMP	PHOENIX CONTACT
AA	50	1	EM-DUO/120/15	DUPLEX RECEPTACLE	PHOENIX CONTACT
AA	51	2	2967662	PLUGGABLE POWER RELAY PLC-RSC-12DC/21	PHOENIX CONTACT
HE	52	1	DE-120	ISOLATROL ELITE SURGE SUPPRESSOR	CONTROL CONCEPTS
PA	53	1	KA4C	LUG (GROUND)	BURNDY
PA	54	7FT	E3X3VH6/C1WH6	WIRING DUCT 3 X 3	PANDUIT
PA	55	10FT	E2X3VH6/C1WH6	WIRING DUCT 2 X 3	PANDUIT
PA	56	3FT	E1.5X3VH6/C1WH6	WIRING DUCT 1.5 X 3	PANDUIT
PA	57	3FT	E1X3VH6/C1WH6	WIRING DUCT 1 X 3	PANDUIT
PA	58	1 SET	1704-720-4	ENGRAVED LEGENDS	PANEL SHOP
PA	59	1	143-1001-4	LEGEND, 2.13 x 4.5	PANEL SHOP
	60				
	61				
	62				
	63				
	64				
	65				
	66				
	67				

MK102 SPARE PARTS

HE	80	5	AGC-1	FUSE 1A FAST ACTING 250V DC	BUSSMAN
	81				

REV	DESCRIPTION	DATE	DWN	CHKD	APVD	ECN
5	MODIFIED PANEL LAYOUT & BOM	05/21/04	ZICK			
4	LHI PUMP FLOW SWITCHES CORRECTED	04/15/04	ZICK			
3	AFTER RELEASE MODIFICATIONS	04/14/04	ZICK			
2	SKID PUMP POWER CHANGED	04/08/04	ZICK			
1	CHANGES FROM PIDS & INSTUMENTS	03/31/04	ZICK			

COMPANY CONFIDENTIAL
THIS DOCUMENT AND ALL INFORMATION CONTAINED HEREIN ARE THE PROPERTY OF THE USFILTER AND/OR ITS AFFILIATES ("USF"). THE DESIGN CONCEPTS AND INFORMATION CONTAINED HEREIN ARE PROPRIETARY TO USF AND ARE SUBMITTED IN CONFIDENCE. THEY ARE NOT TRANSFERABLE AND MUST BE USED ONLY FOR THE PURPOSE FOR WHICH THE DOCUMENT IS EXPRESSLY LOANED. THEY MUST NOT BE DISCLOSED, REPRODUCED, LOANED OR USED IN ANY OTHER MANNER WITHOUT THE EXPRESS WRITTEN CONSENT OF USF. IN NO EVENT SHALL THEY BE USED IN ANY MANNER DETRIMENTAL TO THE INTEREST OF USF. ALL PATENT RIGHTS ARE RESERVED. UPON THE DEMAND OF USF, THIS DOCUMENT, ALONG WITH ALL COPIES AND EXTRACTS, AND ALL RELATED NOTES AND ANALYSES, MUST BE RETURNED TO USF OR DESTROYED AS INSTRUCTED BY USF. ACCEPTANCE OF THE DELIVERY OF THIS DOCUMENT CONSTITUTES AGREEMENT TO THESE TERMS AND CONDITIONS.

DESIGNER ZICK	DATE 02/23/04	TITLE: GENERAL LAYOUT, LIST OF COMPONENTS FOR FLUID BED
CHECKER	DATE	CLIENT: JET PROPULSION LAB, PASADENA, CA
ENGINEER ZICK	DATE	
MANAGER	DATE	USFilter — Envirex Products, Waukesha, WI, 800-524-6324
FILE:		
SCALE: NONE		

PROJECT	CODE	DRAWING	SHEET	REV
41074-04	4034	41074-894-11	1 OF 1	5

STD: 2-0200-24x36D | MADE FROM: | BAR = 1" AT PLOT SCALE

Plot Date: 05/25/04

INTERCONNECT LIST FOR 120VAC SIGNAL WIRES

Control Panel Terminal/Pin	To Device	Device Terminal	Device Location	Control Panel Terminal/Pin	To Device	Device Terminal	Device Location
1		4		1		COM	
01/01	P-110	5	MCC	03/03	PSL640	NC	
1		4		CR110/11		1A	
01/02	P-120	5	MCC	CR110/14	P-110	3	MCC
1		4		CR120/11		1A	
01/03	P-130	5	MCC	CR120/14	P-120	3	MCC
1		4		CR130/11		1A	
01/04	P-140	5	MCC	CR130/14	P-130	3	MCC
1		4		CR140/11		1A	
01/05	P-201	5	MCC	CR140/14	P-140	3	MCC
1		4		CR201/11		1A	
01/06	P-301A	5	MCC	CR201/14	P-201	3	MCC
1		4		CR202/11		1A	
01/07	P-301B	5	MCC	CR202/14	P-202	3	MCC
1		4		CR301A/11		1A	
01/08	B-401	5	MCC	CR301A/14	P-301A	3	MCC
1		4		CR301B/11		1A	
01/09	P-401	5	MCC	CR301B/14	P-301B	3	MCC
1		4		CRB401/11		1A	
01/10	P-601	5	MCC	CRB401/14	B-401	3	MCC
1		4		CR401/11		1A	
01/11	P-801	5	MCC	CR401/14	P-401	3	MCC
1		COM		CR601/11		1A	
01/14	PSL110	NC		CR601/14	P-601	3	MCC
1		COM		CR602/11		1A	
01/15	PSL120	NC		CR602/14	P-602	3	MCC
1		COM		CR701/14		CR701/14	FBR PUMP SKID
02/00	PSL130	NC		2A	P-701	2A	JB
1		COM		CR702/14		CR702/14	FBR PUMP SKID
02/01	PSL140	NC		2A	P-702	2A	JB
1		COM (BLACK)		CR703/14		CR703/14	CHEMICAL FEED
02/02	LSHH201	NC (WHITE)		2A	P-703	2A	SKID JB
1		1	FBR PUMP SKID	CR704/14		CR704/14	CHEMICAL FEED
02/03	PSH301	02/03	JB	2A	P-704	2A	SKID JB
1		1	FBR PUMP SKID	CR705/14		CR705/14	CHEMICAL FEED
02/04	PSL301	02/04	JB	2A	P-705	2A	SKID JB
1		COM (BLACK)		CR706/14		CR706/14	CHEMICAL FEED
02/05	LSH401	NC		2A	P-706	2A	SKID JB
1		COM		CR801/11		1A	
02/06	PSL401	NC		CR801/14	P-801	3	MCC
1		100	TRIMITE FILTER	SURGE/AC		HOT	
02/07	CR2	101	CONTROL PANEL	2	FV301	NEUTRAL	
1		102	TRIMITE FILTER	CR50/11		1A	TRIMITE FILTER
02/08	CR3	103	CONTROL PANEL	CR50/14		3	CONTROL PANEL
1		104	TRIMITE FILTER	CR51/11		1A	TRIMITE FILTER
02/09	CR1	105	CONTROL PANEL	CR51/14		5	CONTROL PANEL
1		COM		CR52/11		1A	TRIMITE FILTER
02/10	LSH501	NC		CR52/14		15	CONTROL PANEL
1		COM		05/08		HOT	ELECTRICAL
02/11	LSHH801	NC		2	ALARM HORN	NEUTRAL	EQUIP ROOM
1		AUX COM		05/09	ALARM	HOT	ELECTRICAL
02/12	P-202	AUX NO	MCC	2	BEACON	NEUTRAL	EQUIP ROOM
1		AUX COM		20	REMOTE	+	GUARD SHED
02/13	P-602	AUX NO	MCC	21	ALARM	-	REMOTE ALARM
1		70	TRIMITE FILTER	1	HIGH	106	TRIMITE FILTER
02/14	CR401	71	CONTROL PANEL	02/15	TURBIDITY	107	CONTROL PANEL
1		COM					
03/00	PSL610	NC					
1		COM					
03/01	PSL620	NC					
1		COM					
03/02	PSL630	NC					

INTERCONNECT LIST FOR 24VDC POWER/SIGNAL WIRES

Control Panel Terminal	To Device	Device Terminal	Device Location	Control Panel Terminal	To Device	Device Terminal	Device Location	Control Panel Terminal	To Device	Device Terminal	Device Location
FU1		RED WIRE		FU17		RED WIRE		FU25		V+	
AI0+		BLACK WIRE		AI16+		BLACK WIRE		AI25+		V-	
SHLD	LT110	TAPE END		SHLD	LT610	TAPE END		SHLD	PT601	TAPE END	
FU2		RED WIRE		FU18		RED WIRE		AO7+		232	TRIMITE FILTER
AI1+		BLACK WIRE		AI17+		BLACK WIRE		AO7-		233	CONTROL
SHLD	LT120	TAPE END		SHLD	LT620	TAPE END		SHLD		SHLD	PANEL
FU3		RED WIRE		FU19		RED WIRE					
AI2+		BLACK WIRE		AI18+		BLACK WIRE					
SHLD	LT130	TAPE END		SHLD	LT630	TAPE END					
FU4		RED WIRE		FU20		RED WIRE					
AI3+		BLACK WIRE		AI19+		BLACK WIRE					
SHLD	LT140	TAPE END		SHLD	LT640	TAPE END					
AI4+		4-20mA+		AI20+		4-20mA+					
AI4-		4-20mA-		AI20-		4-20mA-					
SHLD		TAPE END		SHLD		TAPE END					
FU5		12-24V+		FU21		12-24V+					
PS1-	FT110	12-24V-		PS2-	FT610	12-24V-					
AI5+		4-20mA+		AI21+		4-20mA+					
AI5-		4-20mA-		AI21-		4-20mA-					
SHLD		TAPE END		SHLD		TAPE END					
FU6		12-24V+		FU22		12-24V+					
PS1-	FT120	12-24V-		PS2-	FT620	12-24V-					
AI6+		4-20mA+		AI22+		4-20mA+					
AI6-		4-20mA-		AI22-		4-20mA-					
SHLD		TAPE END		SHLD		TAPE END					
FU7		12-24V+		FU23		12-24V+					
PS1-	FT130	12-24V-		PS2-	FT630	12-24V-					
AI7+		4-20mA+		AI23+		4-20mA+					
AI7-		4-20mA-		AI23-		4-20mA-					
SHLD		TAPE END		SHLD		TAPE END					
FU8		12-24V+		FU24		12-24V+					
PS1-	FT140	12-24V-		PS2-	FT640	12-24V-					
AI8+		4-20mA+		AI24+		230	TRIMITE FILTER				
AI8-		4-20mA-		AI24-		231	CONTROL				
SHLD		TAPE END		SHLD	AIT501	SHLD	PANEL				
FU9		12-24V+		AO0+		PB1+					
PS1-	FT150	12-24V-		AO0-		PB1-	CHEMICAL				
FU10		V+		SHLD	P-703	TAPE END	FEED SKID JB				
AI9+		V-		AO1+		PB2+					
SHLD	PT150	TAPE END		AO1-		PB2-	CHEMICAL				
FU11		RED WIRE		SHLD	P-704	TAPE END	FEED SKID JB				
AI10+		BLACK WIRE		AO2+		+					
SHLD	LIT201	TAPE END		AO2-		-					
FU12		111		SHLD	FCV-201	TAPE END					
AI11+		AI11+	FBR PUMP	AO3+		+					
SHLD	AIT301	TAPE END	SKID JB	AO3-		-					
FU13		RED WIRE		SHLD	LCV401	TAPE END					
AI12+		BLACK WIRE		AO4+		AO4+					
SHLD	LIT401	TAPE END		AO4-		AO4-	FBR PUMP				
FU14		RED WIRE		SHLD	P-701	TAPE END	SKID JB				
AI13+		BLACK WIRE		AO5+		AO5+					
SHLD	LIT502	TAPE END		AO5-		AO5-	FBR PUMP				
FU15		RED WIRE		SHLD	P-702	TAPE END	SKID JB				
AI14+		BLACK WIRE		AO6+		+					
SHLD	LIT801	TAPE END		AO6-		-					
AI15+		4-20mA+		SHLD	LCV601	TAPE END					
AI15-		4-20mA-		A1+		701+	FBR PUMP				
SHLD		TAPE END		A2-	P-701	701-	SKID JB				
FU16		12-24V+		A1+		702+	FBR PUMP				
PS1-	FT601	12-24V-		A2-	P-702	702-	SKID JB				

NOTES:

FIELD WIRE SPEC:
CONTROL WIRE NO. 14STRANDED THWN - OR EQUAL 600V AT 75 C
SIGNAL CABLE - 18GA, TWISTED PAIR, W/DRAIN AND OVERALL SHIELD, PVC JACKET. BELDEN 8760 OR EQUAL

REV	DESCRIPTION	DATE	DWN	CHKD	APVD	ECN
4	CHANGED PER CONERENCE CALL	05/21/04	SHZ	SHZ		
3	ADDED LMI FLOW SWITCHES	04/15/04	SHZ	SHZ		
2	CHANGES FROM KEN	04/13/04	SHZ	SHZ		
1	CHANGES FROM PIDS & INSTRUMENTS	03/31/04	SHZ	SHZ		

COMPANY CONFIDENTIAL
ALL INFORMATION CONTAINED ON THIS DOCUMENT IS THE PROPERTY OF USFILTER AND/OR ITS AFFILIATES ("USF"). THE DESIGN CONCEPTS AND INFORMATION CONTAINED HEREIN ARE PROPRIETARY TO USF AND ARE SUBMITTED IN CONFIDENCE. THEY ARE NOT TRANSFERABLE AND MUST BE USED ONLY FOR THE PURPOSE FOR WHICH THE DOCUMENT IS EXPRESSLY SUBMITTED. THEY MUST NOT BE DISCLOSED, REPRODUCED, LOANED OR USED IN ANY OTHER MANNER WITHOUT THE EXPRESS WRITTEN CONSENT OF USF. USF ASSUMES NO RESPONSIBILITY OR LIABILITY FOR THE USE OF THIS DOCUMENT OR THE DESIGN CONCEPTS AND INFORMATION CONTAINED HEREIN FOR ANOTHER PURPOSE OR IN ANOTHER MANNER THAN DOES NOT RELATE TO THE FITNESS OR MANNER THAT DOES RELATE TO THE FITNESS OR MANNER THAT THE DOCUMENT. IN NO EVENT SHALL THIS DOCUMENT OR THE DESIGN CONCEPTS AND INFORMATION CONTAINED HEREIN BE USED IN ANY MANNER DETRIMENTAL TO THE INTEREST OF USF. ALL PATENT RIGHTS ARE RESERVED. ACCEPTANCE OF THE DELIVERY OF THIS DOCUMENT CONSTITUTES AGREEMENT TO THESE TERMS AND CONDITIONS.

		DATE
DESIGNER	ZICK	02/24/04
CHECKER	DUBEY	
ENGINEER	ZICK	
MANAGER		
FILE:		
SCALE:		

TITLE: INTERCONNECTIONS FOR FLUID BED

CLIENT: JET PROPULSION LAB, PASADENA CA

USFilter — Envirex Products, Waukesha, WI, 800-524-6324

PROJECT	CODE	DRAWING	SHEET	REV
41074-04	4034	41074-894-12	OF	4

STD: 1-0200-24X36D1 | INTL REF: | BAR = 1" AT PLOT SCALE

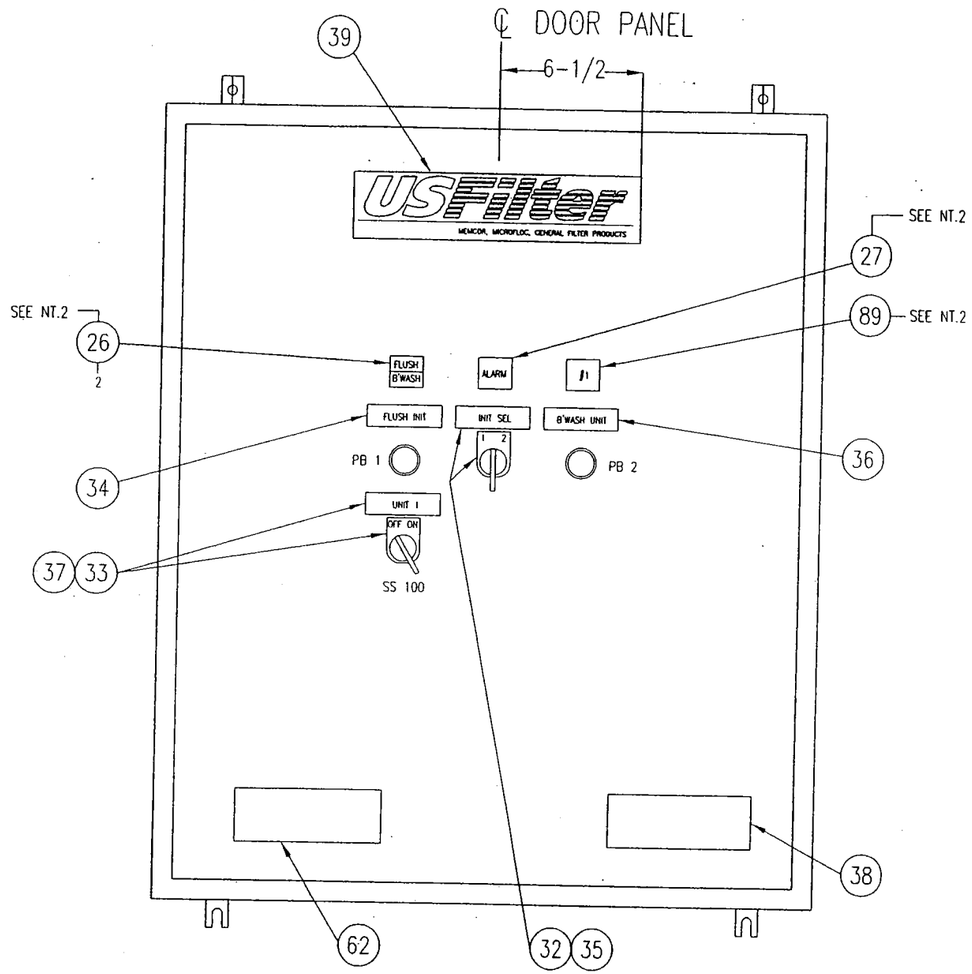

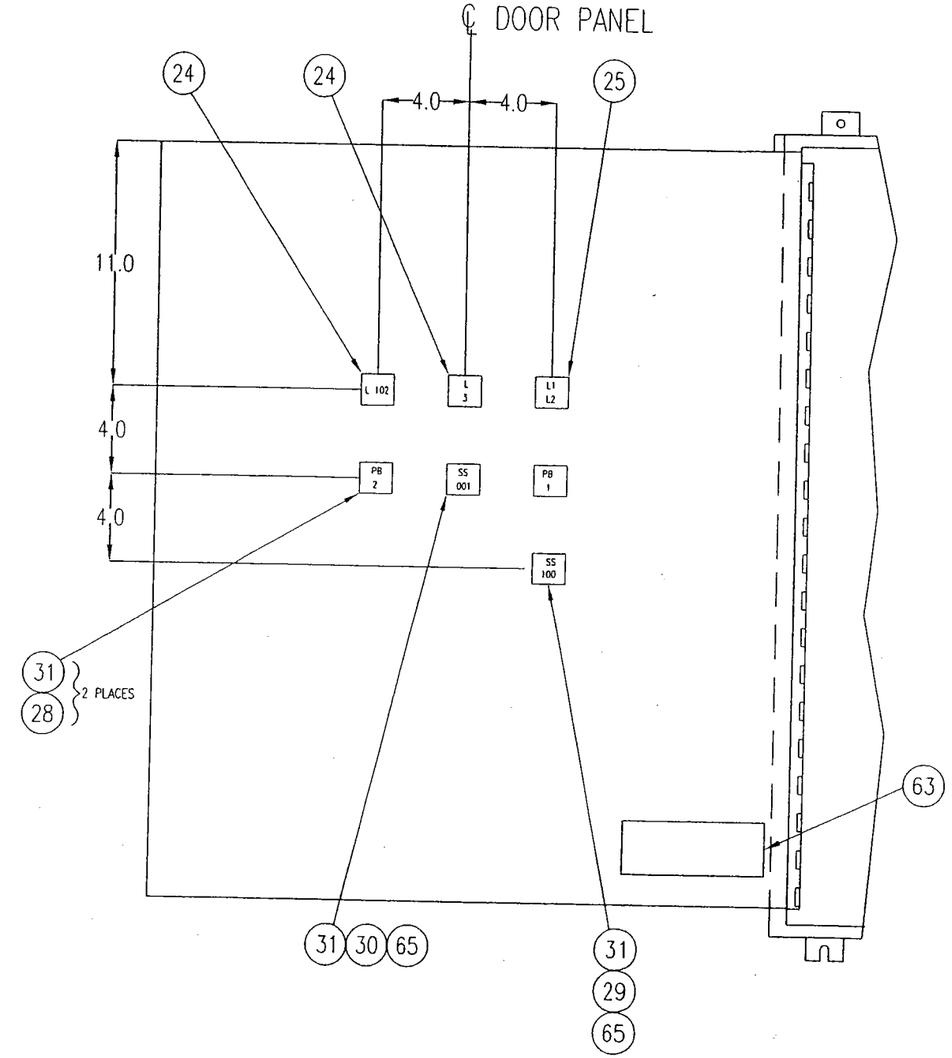

NOTES:

1. RELAYS FOR UNIT 1 TO BE INSTALLED WITH COIL TERMINALS FACING TO LEFT, FOR UNIT 2 – FACE TO RIGHT
2. COLOR INSERTS TO BE LABELLED AS FOLLOWS USING HEAT PERMATIZED LETTERS:

LIGHT NUMBER	INSERT COLOR	ITEM NUMBER	LOCATION
L1	AMBER	48	TOP
L2	AMBER	49	BOTTOM
L3	RED	50	CENTER
L102	GREEN	51	TOP
L103	GREEN	54	BOTTOM

3. PANEL WIRING PER PS-2 EXCEPT WIRE TO BE 16 GA. THHN STRANDED
4. PANEL FINISH PER FS-56 EXTERIOR ONLY
5. SWITCH AND LIGHT CUTOUT PER STANDARD CUTOUT "B", SPEC PS-3
6. PLACE 4-20ma JUMPERS ON PINS FOR THE ANALOG INPUT MODULE

REFERENCE DRAWINGS
3100364021 ELECTRICAL SCHEMATIC
3100364022 ELECTRICAL ONE-LINE DIAGRAM
3100364023 INSTRUMENT LOOP DIAGRAM

REV	DESCRIPTION	DATE	DWN	CHKD	APVD	ECN
2	SHEET 2: ADDED RELAYS CR-1, CR-2, CR-3.	05/06/04	SJT	-	-	-

COMPANY CONFIDENTIAL
THIS DOCUMENT AND ALL INFORMATION CONTAINED HEREIN ARE THE PROPERTY OF THE USFILTER AND/OR ITS AFFILIATES ("USF"). THE DESIGN CONCEPTS AND INFORMATION CONTAINED HEREIN ARE PROPRIETARY TO USF AND ARE SUBMITTED IN CONFIDENCE. THEY ARE NOT TRANSFERABLE AND MUST BE USED ONLY FOR THE PURPOSE FOR WHICH THE DOCUMENT IS EXPRESSLY LOANED. THEY MUST NOT BE DISCLOSED, REPRODUCED, LOANED OR USED IN ANY OTHER MANNER WITHOUT THE EXPRESS WRITTEN CONSENT OF USF. IN NO EVENT SHALL THEY BE USED IN ANY MANNER DETRIMENTAL TO THE INTEREST OF USF. ALL PATENT RIGHTS ARE RESERVED. UPON THE DEMAND OF USF, THIS DOCUMENT, ALONG WITH ALL COPIES AND EXTRACTS, AND ALL RELATED NOTES AND ANALYSES, MUST BE RETURNED TO USF OR DESTROYED, AS INSTRUCTED BY USF. ACCEPTANCE OF THE DELIVERY OF THIS DOCUMENT CONSTITUTES AGREEMENT TO THESE TERMS AND CONDITIONS.

DESIGNER		DATE
CHECKER		DATE
ENGINEER	SJT	DATE 04/01/04
MANAGER		DATE -
FILE: KOA-13		
SCALE: NTS		

TITLE CONTROL PANEL ASSEMBLY
TRI-MITE TM-350A

CLIENT NASA JPL
PASADENA, CA

USFilter
441 MAIN STREET
STURBRIDGE, MA 01562
TEL: 1-800-636-2674

PROJECT	CODE	DRAWING	SHEET	REV
310036		3100368031	1 OF 2	2

BAR = 1" AT PLOT SCALE
INTL REF:
STD: 2-0600-11X17B

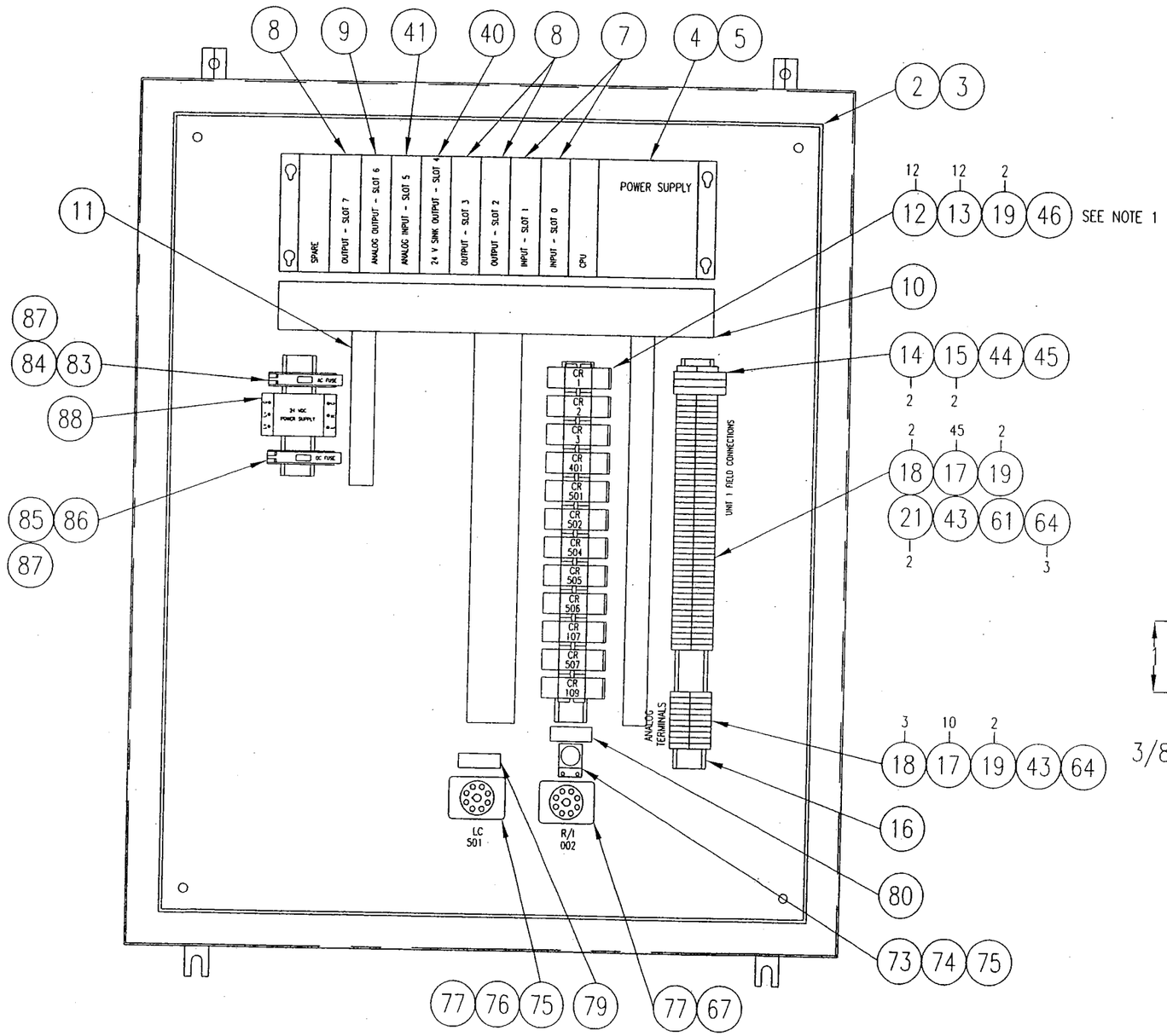

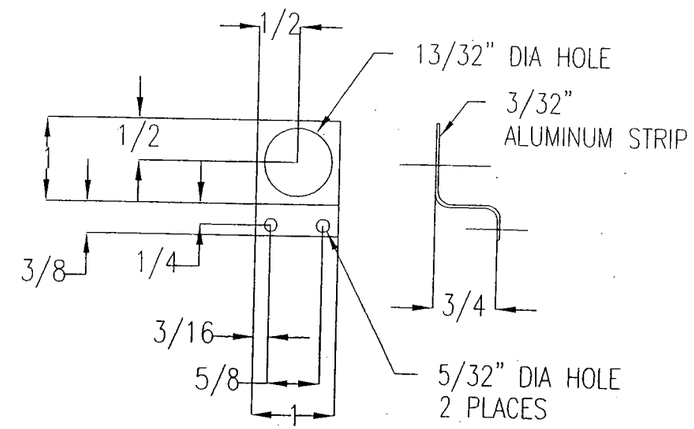

POTENTIOMETER MOUNTING BRACKET
(FABRICATE DURING ASSEMBLY)

REV	DESCRIPTION	DATE	DWN	CHKD	APVD	ECN
2	SEE SHEET 1	05/06/04	SJT	-	-	-

COMPANY CONFIDENTIAL
THIS DOCUMENT AND ALL INFORMATION CONTAINED HEREIN ARE THE PROPERTY OF THE USFILTER AND/OR ITS AFFILIATES (USF). THE DESIGN CONCEPTS AND INFORMATION CONTAINED HEREIN ARE PROPRIETARY TO USF AND ARE SUBMITTED IN CONFIDENCE. THEY ARE NOT TRANSFERABLE AND MUST BE USED ONLY FOR THE PURPOSE FOR WHICH THE DOCUMENT IS EXPRESSLY LOANED. THEY MUST NOT BE DISCLOSED, REPRODUCED, LOANED OR USED IN ANY OTHER MANNER WITHOUT THE EXPRESS WRITTEN CONSENT OF USF. IN NO EVENT SHALL THEY BE USED IN ANY MANNER DETRIMENTAL TO THE INTEREST OF USF. ALL PATENT RIGHTS ARE RESERVED. UPON THE DEMAND OF USF, THIS DOCUMENT, ALONG WITH ALL COPIES AND EXTRACTS, AND ALL RELATED NOTES AND ANALYSES, MUST BE RETURNED TO USF OR DESTROYED, AS INSTRUCTED BY USF. ACCEPTANCE OF THE DELIVERY OF THIS DOCUMENT CONSTITUTES AGREEMENT TO THESE TERMS AND CONDITIONS.

DESIGNER		DATE
CHECKER		DATE
ENGINEER	SJT	DATE 04/01/04
MANAGER		DATE -
FILE:	K0A-13	
SCALE:	NTS	

TITLE: CONTROL PANEL ASSEMBLY
TRI-MITE TM-350A

CLIENT: NASA JPL
PASADENA, CA

USFilter
441 MAIN STREET
STURBRIDGE, MA 01562
TEL: 1-800-636-2674

PROJECT	CODE	DRAWING	SHEET	REV
310036		3100368031	2 OF 2	2

BAR = 1" AT PLOT SCALE
INTL REF:
STD: 2-0600-11X17B

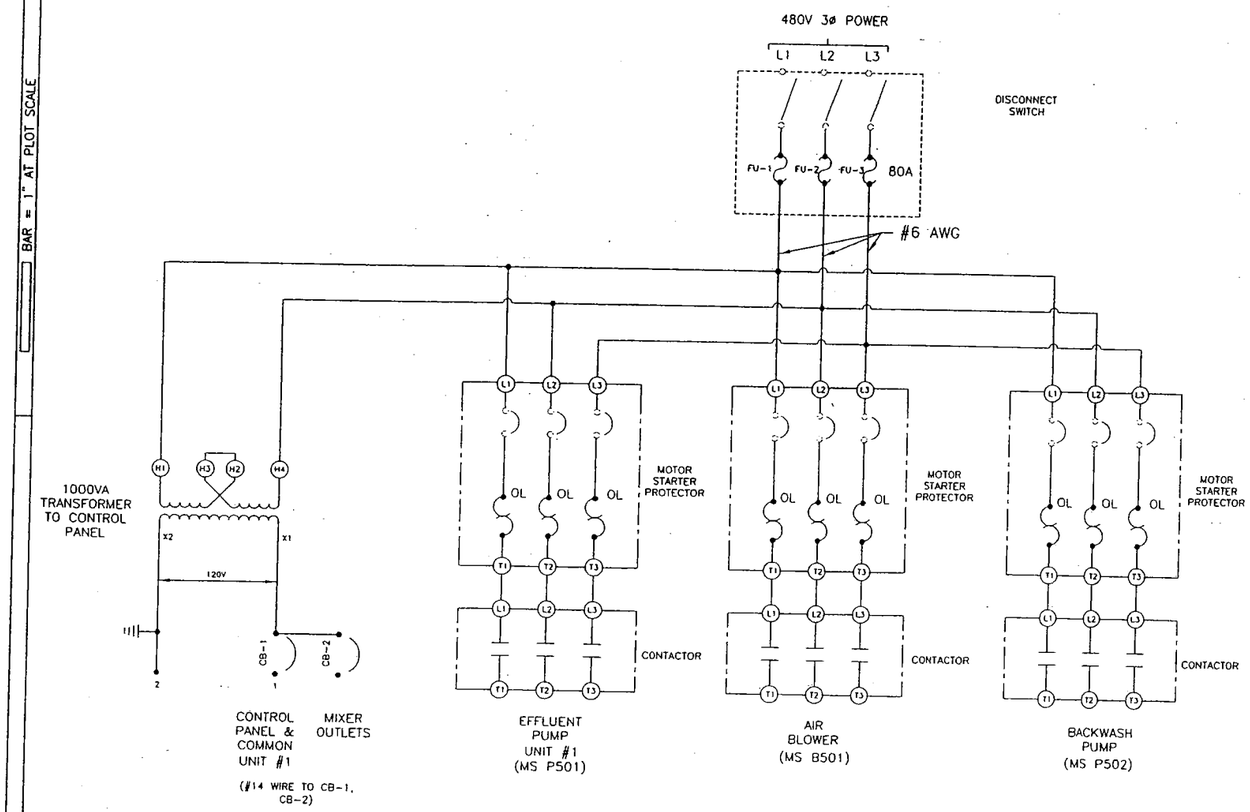

POWER WIRING

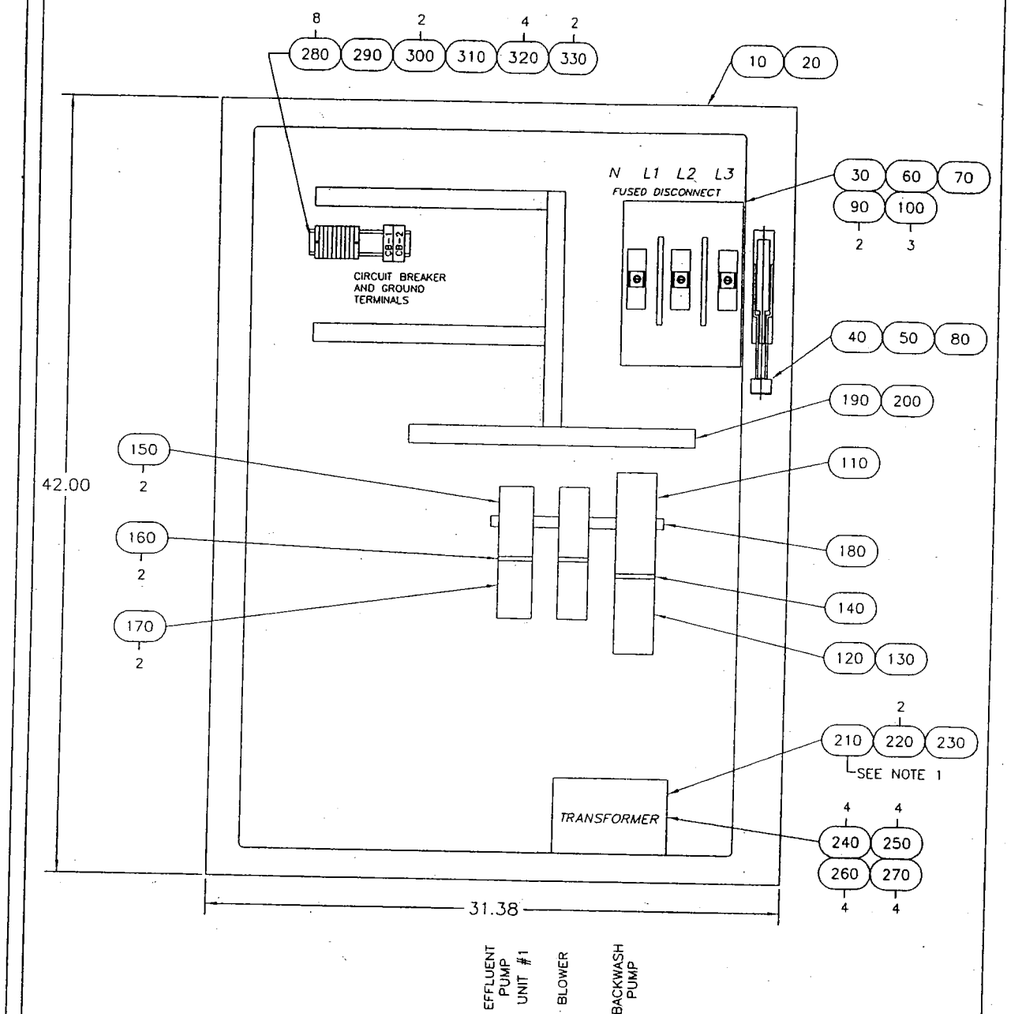

POWER PANEL ASSEMBLY

NOTES:

1. FASTEN TRANSFORMER TO "FLOOR" OF ENCLOSURE.
2. LABEL ALL INTERNAL DEVICES WITH PERMANENT MARKERS.

APPLICABLE SPECS:

FASTENERS-PS-20
FINISH=FS-56 EXTERIOR
CUTOUTS=PS-3
WIRING=PS-2
NAMEPLATES=PS-4

REFERENCE DWGS:

ELECTRICAL SCHEMATIC 3100367121
ELECTRICAL INTERCONNECTION DIAGRAM 3100367122
INSTRUMENTATION LOOP 3100367123

CONTROL WIRING

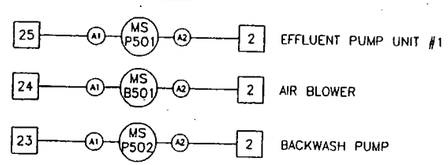

REV	DESCRIPTION	DATE	DWN	CHKD	APVD	ECN
2	REVISED TAG NUMBERS TO MATCH PROJECT LIST.	05/06/04	SJT	-	-	-

COMPANY CONFIDENTIAL
THIS DOCUMENT AND ALL INFORMATION CONTAINED HEREIN ARE THE PROPERTY OF THE USFILTER AND/OR ITS AFFILIATES ("USF"). THE DESIGN CONCEPTS AND INFORMATION CONTAINED HEREIN ARE PROPRIETARY TO USF AND ARE SUBMITTED IN CONFIDENCE. THEY ARE NOT TRANSFERABLE AND MUST BE USED ONLY FOR THE PURPOSE FOR WHICH THE DOCUMENT IS EXPRESSLY LOANED. THEY MUST NOT BE DISCLOSED, REPRODUCED, LOANED OR USED IN ANY OTHER MANNER WITHOUT THE EXPRESS WRITTEN CONSENT OF USF. IN NO EVENT SHALL THEY BE USED IN ANY MANNER DETRIMENTAL TO THE INTEREST OF USF. ALL PATENT RIGHTS ARE RESERVED. UPON THE DEMAND OF USF, THIS DOCUMENT, ALONG WITH ALL COPIES AND EXTRACTS, AND ALL RELATED NOTES AND ANALYSES, MUST BE RETURNED TO USF OR DESTROYED, AS INSTRUCTED BY USF. ACCEPTANCE OF THE DELIVERY OF THIS DOCUMENT CONSTITUTES AGREEMENT TO THESE TERMS AND CONDITIONS.

DESIGNER		DATE
CHECKER		DATE
ENGINEER	SJT	DATE 03/31/04
MANAGER		DATE -
FILE: K0A-15C		
SCALE: NTS		

TITLE TM-350A POWER PANEL ASSEMBLY
480V, 3PH, 4 WIRE POWER W/ TRANSFORMER

CLIENT NASA JPL
PASADENA, CA

USFilter
441 MAIN STREET
STURBRIDGE, MA 01562
TEL: 1-800-636-2674

PROJECT	CODE	DRAWING	SHEET	REV
310036		3100368032	1 OF 1	2

BAR = 1" AT PLOT SCALE
INTL REF:
STD: 2-0600-11X17B

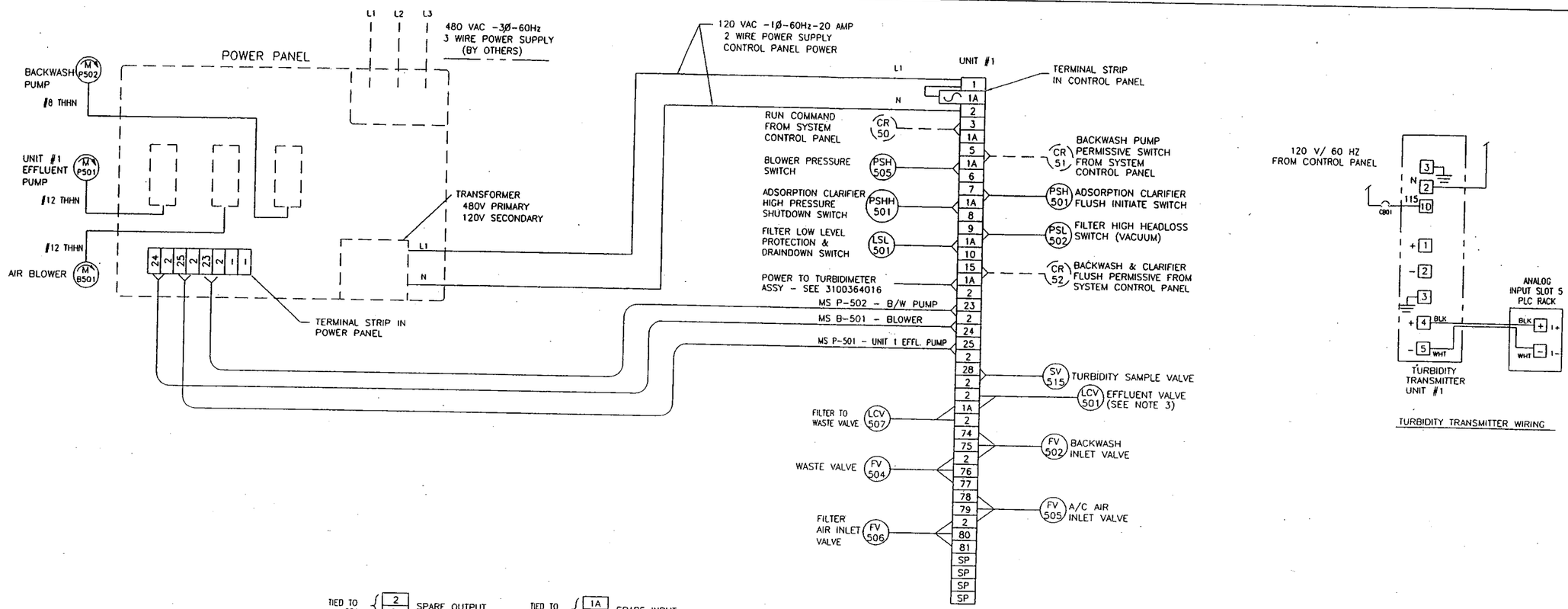

NOTES:

1. GROUP ALL #1 TERMINALS TOGETHER, GROUP ALL #2 TERMINALS TOGETHER, CONNECT LIKE TERMINALS WITH JUMPER BAR ASSEMBLIES PUT TERMINAL #3 BETWEEN #1'S AND #2'S.
2. SOLID LINE: FACTORY WIRING BY U. S. FILTER.
   DOTTED LINE: FIELD WIRING BY INSTALLING CONTRACTOR
3. SEE DRAWING 3100367123 FOR 4-20 mA SIGNALS TO EFFLUENT AND FILTER TO WASTE VALVES.

REV	DESCRIPTION	DATE	DWN	CHKD	APVD	ECN
4	ADDED TURBIDIMETER POWER SUPPLY CIRCUIT BREAKER	05/25/04	SJT	-	-	-
3	REVISED DRAWINGS PER USF MEMCOR/ENVIROX/SHAW CONFERENCE	05/20/04	SJT	-	-	-
2	REVISED TAG NUMBERS TO MATCH PROJECT LIST.	05/06/04	SJT	-	-	-

COMPANY CONFIDENTIAL
THIS DOCUMENT AND ALL INFORMATION CONTAINED HEREIN ARE THE PROPERTY OF THE USFILTER AND/OR ITS AFFILIATES ("USF"). THE DESIGN CONCEPTS AND INFORMATION CONTAINED HEREIN ARE PROPRIETARY TO USF AND ARE SUBMITTED IN CONFIDENCE. THEY ARE NOT TRANSFERABLE AND MUST BE USED ONLY FOR THE PURPOSE FOR WHICH THE DOCUMENT IS EXPRESSLY LOANED. THEY MUST NOT BE DISCLOSED, REPRODUCED, LOANED OR USED IN ANY OTHER MANNER WITHOUT THE EXPRESS WRITTEN CONSENT OF USF. IN NO EVENT SHALL THEY BE USED IN ANY MANNER DETRIMENTAL TO THE INTEREST OF USF. ALL PATENT RIGHTS ARE RESERVED. UPON THE DEMAND OF USF, THIS DOCUMENT, ALONG WITH ALL COPIES AND EXTRACTS, AND ALL RELATED NOTES AND ANALYSES, MUST BE RETURNED TO USF OR DESTROYED, AS INSTRUCTED BY USF. ACCEPTANCE OF THE DELIVERY OF THIS DOCUMENT CONSTITUTES AGREEMENT TO THESE TERMS AND CONDITIONS.

DESIGNER	DATE
CHECKER	DATE
ENGINEER SJT	DATE 04/01/04
MANAGER	DATE -
FILE: KOE-5	
SCALE: NTS	

TITLE ELECTRICAL ONE-LINE DIAGRAM
TRI-MITE TM-350A

CLIENT NASA JPL
PASADENA, CA

USFilter
441 MAIN STREET
STURBRIDGE, MA 01562
TEL: 1-800-636-2674

PROJECT	CODE	DRAWING	SHEET	REV
310036		3100367122	1 OF 1	4

BAR = 1" AT PLOT SCALE
INTL REF:
STD: 2-0600-11X17B

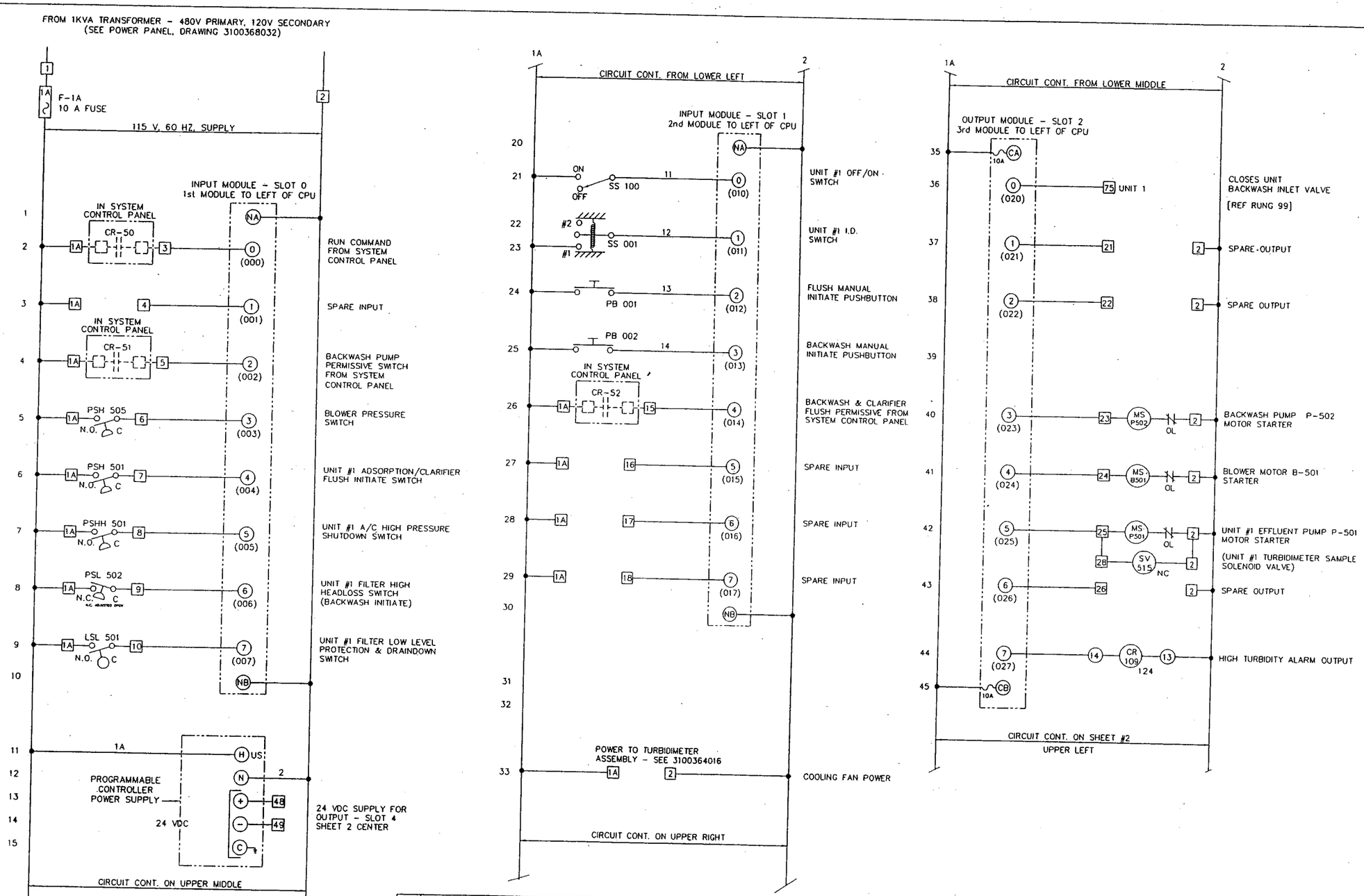

REV	DESCRIPTION	DATE	DWN	CHKD	APVD	ECN
3	REVISED DRAWINGS PER USF MEMCOR/ENVIROX/SHAW CONFERENCE	05/20/04	SJT	-	-	-
2	REVISED TAG NUMBERS TO MATCH PROJECT LIST.	05/06/04	SJT	-	-	-

COMPANY CONFIDENTIAL
THIS DOCUMENT AND ALL INFORMATION CONTAINED HEREIN ARE THE PROPERTY OF THE USFILTER AND/OR ITS AFFILIATES ("USF"). THE DESIGN CONCEPTS AND INFORMATION CONTAINED HEREIN ARE PROPRIETARY TO USF AND ARE SUBMITTED IN CONFIDENCE. THEY ARE NOT TRANSFERABLE AND MUST BE USED ONLY FOR THE PURPOSE FOR WHICH THE DOCUMENT IS EXPRESSLY LOANED. THEY MUST NOT BE DISCLOSED, REPRODUCED, LOANED OR USED IN ANY OTHER MANNER WITHOUT THE EXPRESS WRITTEN CONSENT OF USF. IN NO EVENT SHALL THEY BE USED IN ANY MANNER DETRIMENTAL TO THE INTEREST OF USF. ALL PATENT RIGHTS ARE RESERVED. UPON THE DEMAND OF USF, THIS DOCUMENT, ALONG WITH ALL COPIES AND EXTRACTS, AND ALL RELATED NOTES AND ANALYSES, MUST BE RETURNED TO USF OR DESTROYED, AS INSTRUCTED BY USF. ACCEPTANCE OF THE DELIVERY OF THIS DOCUMENT CONSTITUTES AGREEMENT TO THESE TERMS AND CONDITIONS.

DESIGNER		DATE
CHECKER		DATE
ENGINEER	SJT	DATE 04/01/04
MANAGER		DATE -
FILE: KOE-4		
SCALE: NTS		

TITLE: ELECTRICAL SCHEMATIC
TRI-MITE TM-350A

CLIENT: NASA JPL
PASADENA, CA

USFilter
441 MAIN STREET
STURBRIDGE, MA 01562
TEL: 1-800-636-2674

PROJECT	CODE	DRAWING	SHEET	REV
310036		3100367121	1 OF 2	3

BAR = 1" AT PLOT SCALE
INTL REF:
STD: 2-0600-11X17B

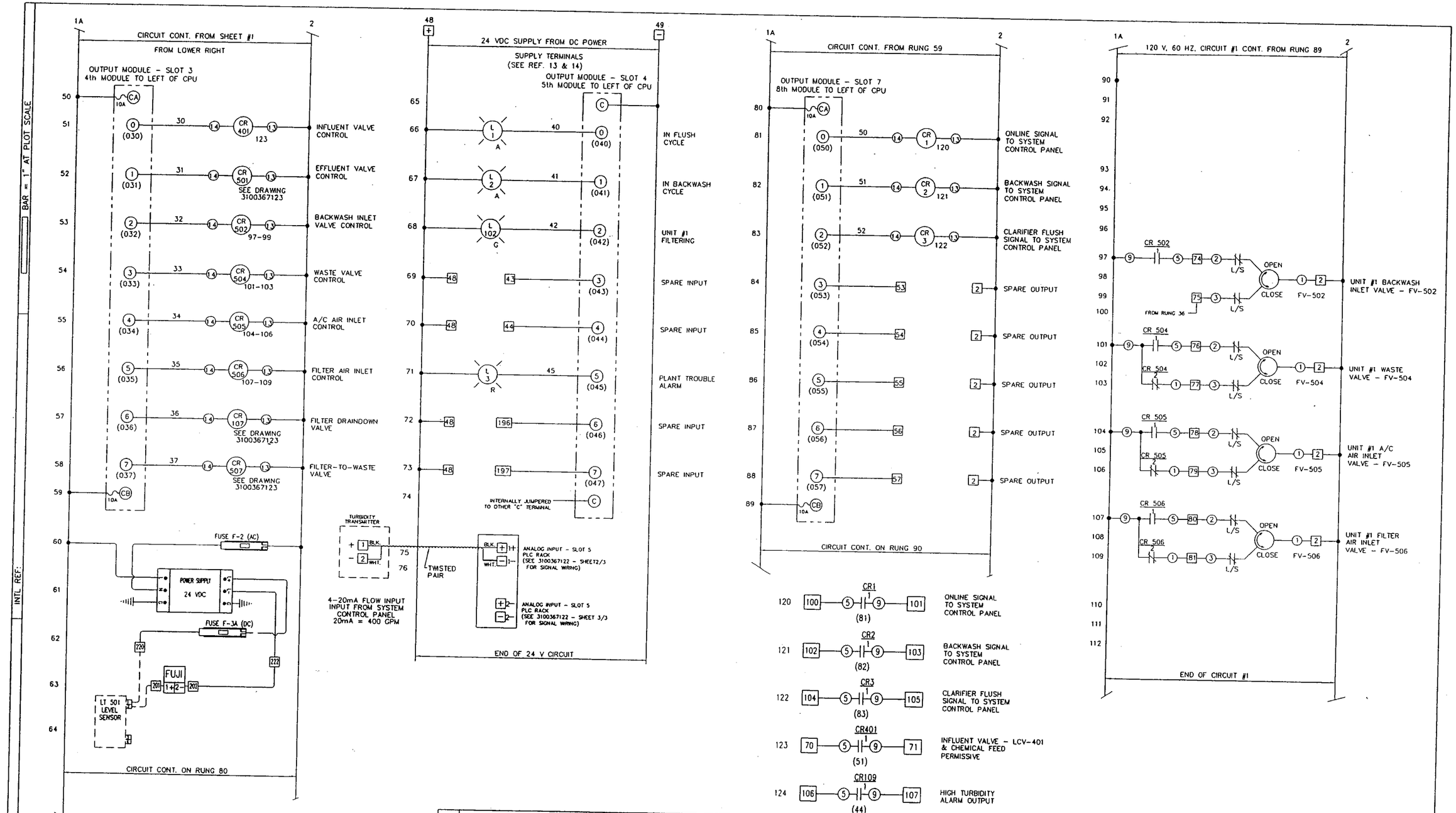

REV	DESCRIPTION	DATE	DWN	CHKD	APVD	ECN
3	SEE SHEET 1					
2	SEE SHEET 1					

COMPANY CONFIDENTIAL
THIS DOCUMENT AND ALL INFORMATION CONTAINED HEREIN ARE THE PROPERTY OF THE USFILTER AND/OR ITS AFFILIATES ("USF"). THE DESIGN CONCEPTS AND INFORMATION CONTAINED HEREIN ARE PROPRIETARY TO USF AND ARE SUBMITTED IN CONFIDENCE. THEY ARE NOT TRANSFERABLE AND MUST BE USED ONLY FOR THE PURPOSE FOR WHICH THE DOCUMENT IS EXPRESSLY LOANED. THEY MUST NOT BE DISCLOSED, REPRODUCED, LOANED OR USED IN ANY OTHER MANNER WITHOUT THE EXPRESS WRITTEN CONSENT OF USF. IN NO EVENT SHALL THEY BE USED IN ANY MANNER DETRIMENTAL TO THE INTEREST OF USF. ALL PATENT RIGHTS ARE RESERVED. UPON THE DEMAND OF USF, THIS DOCUMENT, ALONG WITH ALL COPIES AND EXTRACTS, AND ALL RELATED NOTES AND ANALYSES, MUST BE RETURNED TO USF OR DESTROYED, AS INSTRUCTED BY USF. ACCEPTANCE OF THE DELIVERY OF THIS DOCUMENT CONSTITUTES AGREEMENT TO THESE TERMS AND CONDITIONS.

DESIGNER		DATE
CHECKER		DATE
ENGINEER	SJT	DATE 04/01/04
MANAGER		DATE -
FILE: KOE-4		
SCALE: NTS		

TITLE ELECTRICAL SCHEMATIC
TRI-MITE TM-350A

CLIENT NASA JPL
PASADENA, CA

USFilter
441 MAIN STREET
STURBRIDGE, MA 01562
TEL: 1-800-636-2674

PROJECT	CODE	DRAWING	SHEET	REV
310036		3100367121	2 OF 2	3

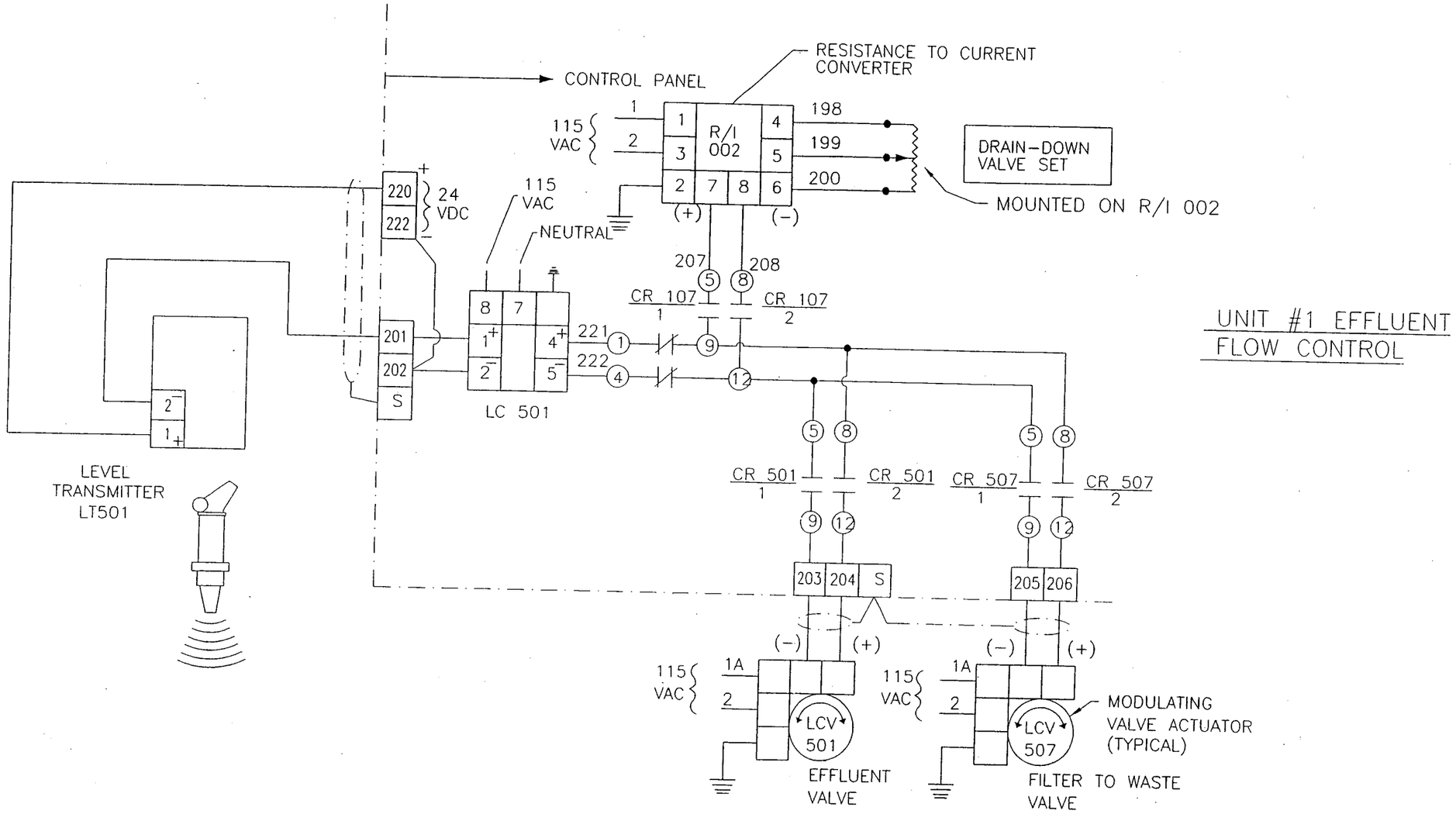

UNIT #1 EFFLUENT FLOW CONTROL

REV	DESCRIPTION	DATE	DWN	CHKD	APVD	ECN
4	ADDED TURBIDIMETER POWER SUPPLY CIRCUIT BREAKER	05/25/04	SJT	–	–	–
3	REVISED DRAWINGS PER USF MEMCOR/ENVIROX/SHAW CONFERENCE	05/20/04	SJT	–	–	–
2	REVISED TAG NUMBERS TO MATCH PROJECT LIST.	05/06/04	SJT	–	–	–

COMPANY CONFIDENTIAL
THIS DOCUMENT AND ALL INFORMATION CONTAINED HEREIN ARE THE PROPERTY OF THE USFILTER AND/OR ITS AFFILIATES ("USF"). THE DESIGN CONCEPTS AND INFORMATION CONTAINED HEREIN ARE PROPRIETARY TO USF AND ARE SUBMITTED IN CONFIDENCE. THEY ARE NOT TRANSFERABLE AND MUST BE USED ONLY FOR THE PURPOSE FOR WHICH THE DOCUMENT IS EXPRESSLY LOANED. THEY MUST NOT BE DISCLOSED, REPRODUCED, LOANED OR USED IN ANY OTHER MANNER WITHOUT THE EXPRESS WRITTEN CONSENT OF USF. IN NO EVENT SHALL THEY BE USED IN ANY MANNER DETRIMENTAL TO THE INTEREST OF USF. ALL PATENT RIGHTS ARE RESERVED. UPON THE DEMAND OF USF, THIS DOCUMENT, ALONG WITH ALL COPIES AND EXTRACTS, AND ALL RELATED NOTES AND ANALYSES, MUST BE RETURNED TO USF, OR DESTROYED, AS INSTRUCTED BY USF. ACCEPTANCE OF THE DELIVERY OF THIS DOCUMENT CONSTITUTES AGREEMENT TO THESE TERMS AND CONDITIONS.

DESIGNER	DATE
CHECKER	DATE
ENGINEER SJT	DATE 04/01/04
MANAGER	DATE –
FILE: KOE-6	
SCALE: NTS	

TITLE INSTRUMENT LOOP DIAGRAM
TRI-MITE TM-350A

CLIENT NASA JPL
PASADENA, CA

USFilter
441 MAIN STREET
STURBRIDGE, MA 01562
TEL: 1-800-636-2674

PROJECT	CODE	DRAWING	SHEET	REV
310036		3100367123	1 OF 3	4

BAR = 1" AT PLOT SCALE

INTL REF:

STD: 2-0600-11X17B

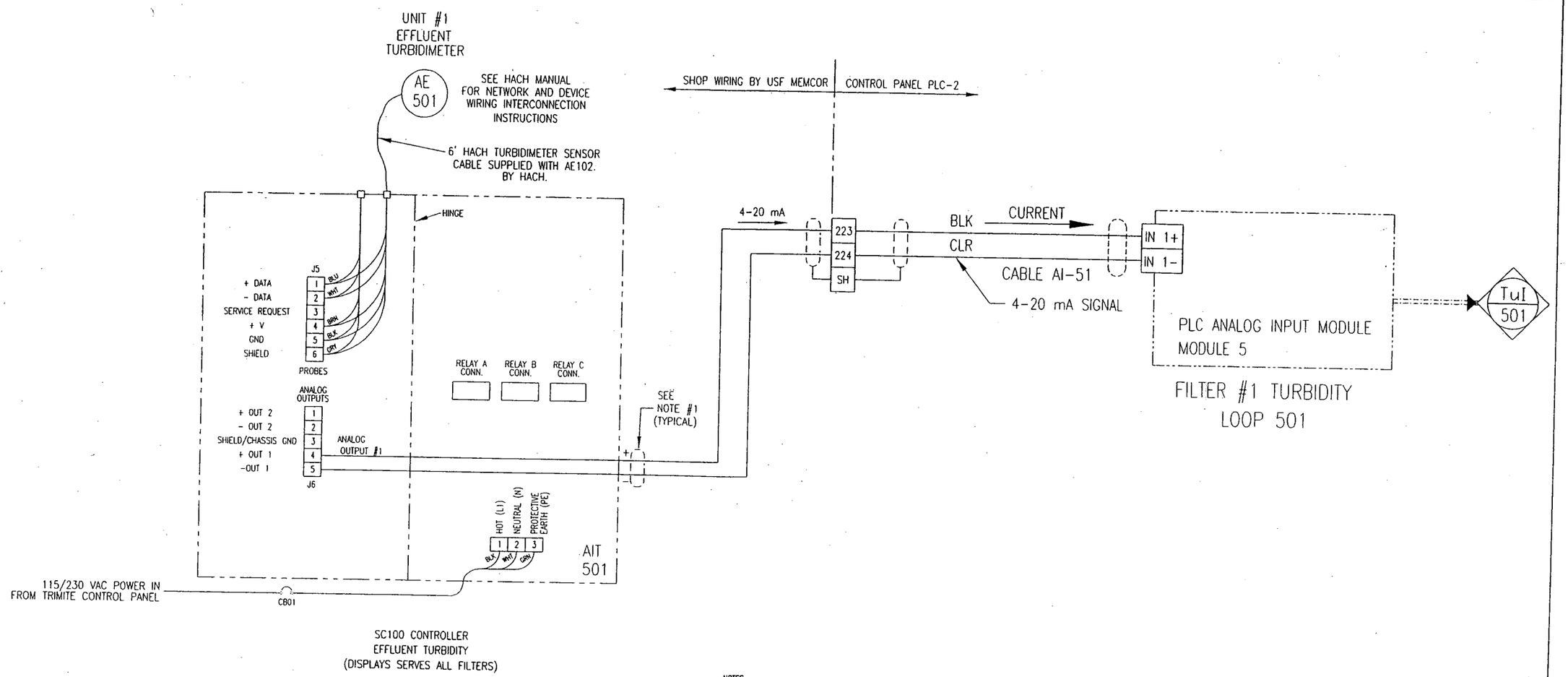

CALIBRATED 0-1.000 NTU = 4-20mA

NOTES

1. (2)-#18 TWISTED PAIR W/ SHIELD
(CONNECT SHIELD AT ONE END OF CABLE ONLY)

LEGEND

AE ANALYZING ELEMENT
CR CONTROL RELAY

UNIT #1 EFFLUENT TURBIDITY

REV	DESCRIPTION	DATE	DWN	CHKD	APVD	ECN
4	SEE SHEET 1	-	-	-	-	-
3	SEE SHEET 1	-	-	-	-	-
2	SEE SHEET 1	-	-	-	-	-

COMPANY CONFIDENTIAL
ALL INFORMATION CONTAINED ON THIS DOCUMENT IS THE PROPERTY OF USFILTER AND/OR ITS AFFILIATES ("USF"). THE DESIGN CONCEPTS AND INFORMATION CONTAINED HEREIN ARE PROPRIETARY TO USF AND ARE SUBMITTED IN CONFIDENCE. THEY ARE NOT TRANSFERABLE AND MUST BE USED ONLY FOR THE PURPOSE FOR WHICH THE DOCUMENT IS EXPRESSLY SUBMITTED. THEY MUST NOT BE DISCLOSED, REPRODUCED, LOANED OR USED IN ANY OTHER MANNER WITHOUT THE EXPRESS WRITTEN CONSENT OF USF. USF ASSUMES NO RESPONSIBILITY OR LIABILITY FOR THE USE OF THIS DOCUMENT OR THE DESIGN CONCEPTS AND INFORMATION CONTAINED HEREIN FOR ANOTHER PROJECT, OR IN A MANNER THAT DOES NOT RELATE TO THE FITNESS OR PURPOSE OF THIS DOCUMENT. IN NO EVENT SHALL THIS DOCUMENT OR THE DESIGN CONCEPTS AND INFORMATION CONTAINED HEREIN BE USED IN ANY MANNER DETRIMENTAL TO THE INTEREST OF USF. ALL PATENT RIGHTS ARE RESERVED. ACCEPTANCE OF THE DELIVERY OF THIS DOCUMENT CONSTITUTES AGREEMENT TO THESE TERMS AND CONDITIONS.

DESIGNER	DATE
CHECKER	DATE
ENGINEER SJT	DATE 04/01/04
MANAGER	DATE -
FILE: K0E-6	
SCALE: NTS	

TITLE INSTRUMENT LOOP DIAGRAM FOR 1720E TURB.
TRI-MITE TM-350A

CLIENT NASA JPL
PASADENA, CA

USFilter

BUSINESS CENTER - NAME
BUSINESS CENTER - CITY, STATE
BUSINESS CENTER - TEL

PROJECT	CODE	DRAWING	SHEET	REV
310036		3100367123	2 OF 3	4

STD: 3-0600-11X17B

INTL REF:

BAR = 1" AT PLOT SCALE

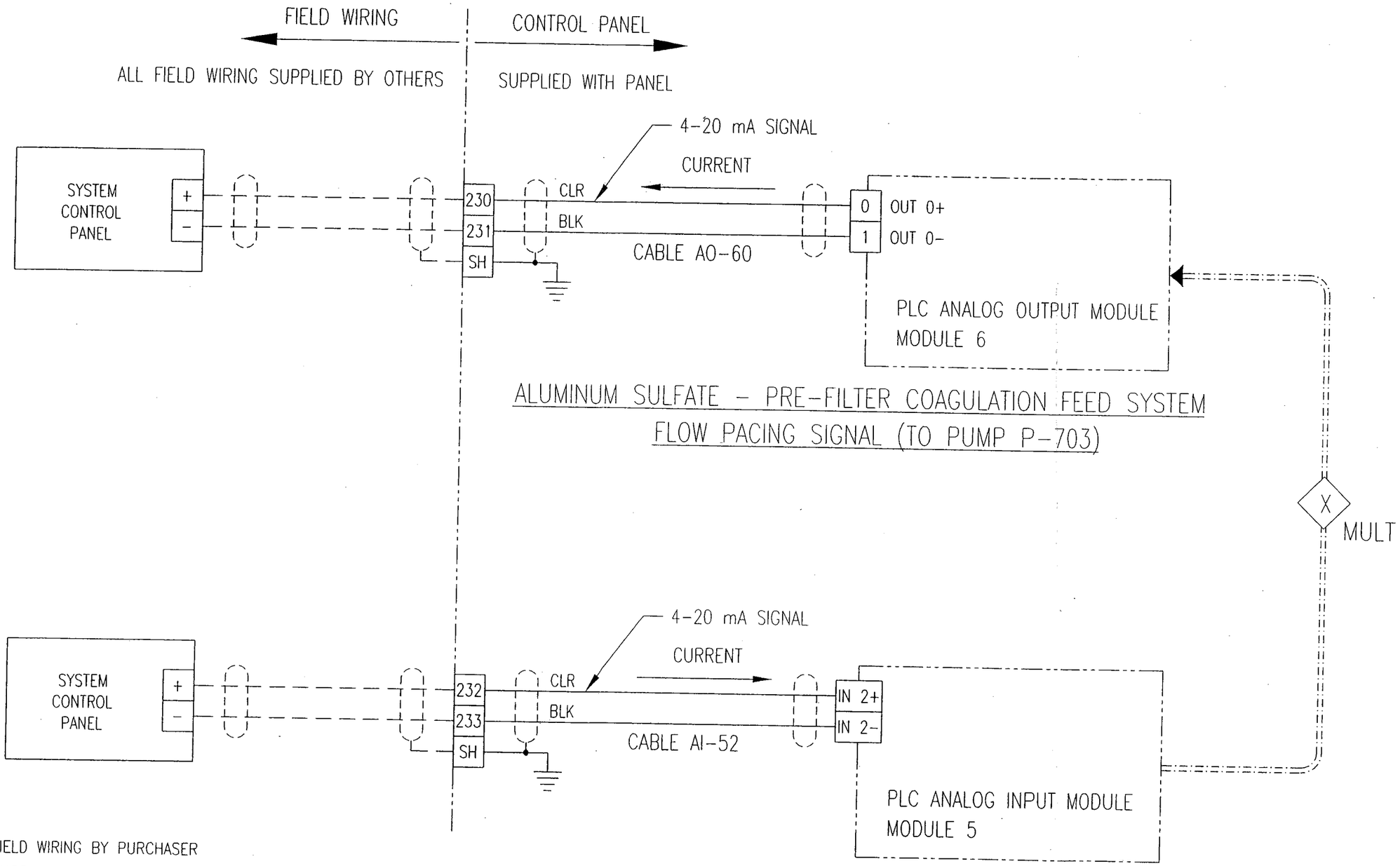

REV	DESCRIPTION	DATE	DWN	CHKD	APVD	ECN
4	SEE SHEET 1					
3	SEE SHEET 1					
2	SEE SHEET 1					

COMPANY CONFIDENTIAL
THIS DOCUMENT AND ALL INFORMATION CONTAINED HEREIN ARE THE PROPERTY OF THE USFILTER AND/OR ITS AFFILIATES ("USF"). THE DESIGN CONCEPTS AND INFORMATION CONTAINED HEREIN ARE PROPRIETARY TO USF AND ARE SUBMITTED IN CONFIDENCE. THEY ARE NOT TRANSFERABLE AND MUST BE USED ONLY FOR THE PURPOSE FOR WHICH THE DOCUMENT IS EXPRESSLY LOANED. THEY MUST NOT BE DISCLOSED, REPRODUCED, LOANED OR USED IN ANY OTHER MANNER WITHOUT THE EXPRESS WRITTEN CONSENT OF USF. IN NO EVENT SHALL THEY BE USED IN ANY MANNER DETRIMENTAL TO THE INTEREST OF USF. ALL PATENT RIGHTS ARE RESERVED. UPON THE DEMAND OF USF, THIS DOCUMENT, ALONG WITH ALL COPIES AND EXTRACTS, AND ALL RELATED NOTES AND ANALYSES, MUST BE RETURNED TO USF OR DESTROYED, AS INSTRUCTED BY USF. ACCEPTANCE OF THE DELIVERY OF THIS DOCUMENT CONSTITUTES AGREEMENT TO THESE TERMS AND CONDITIONS.

DESIGNER		DATE
CHECKER		DATE
ENGINEER	SJT	DATE 04/01/04
MANAGER		DATE
FILE:		
SCALE:	NTS	

TITLE: LOOP DIAGRAM FOR ALUM PUMP CONTROL
TRI-MITE TM-350A

CLIENT: NASA JPL
PASADENA, CA

USFilter
441 MAIN STREET
STURBRIDGE, MA 01562
TEL: 1-800-636-2674

PROJECT	CODE	DRAWING	SHEET	REV
310036		3100367123	3 OF 3	4

BAR = 1" AT PLOT SCALE
INTL REF:
STD: 2-06U_ .1A1/B

APPENDIX F – Process Controls and Assembly Specification

Shaw™ Shaw Environmental, Inc.

17 Princess Road
Lawrenceville, NJ 08646

Phone: (609) 895-5340
Fax: (609) 895-1858

PROCESS CONTROL and ASSEMBLY SPECIFICATION
OU-1 Treatment System
Pasadena, California
Shaw E&I Project # 100770
Preliminary Issue, Revision D, May 28, 2004

1.0 Introduction

This document provides a description of the process control logic, the major control equipment and the control panel assembly requirements for the OU-1 Treatment System. Additional specific details, which are referenced herein, are contained in the Piping and Instrumentation Diagrams, the Bill of Materials and the component cut sheets.

2.0 Main Control Panel Assembly:

The Main Control Panel Assembly includes the following:

A. NEMA 4X enclosure, Floor or wall mount
B. PLC
C. Operator Interface Terminal (HMI)
D. Engraved labels for all panel mounted devices
E. Alarm RESET pushbutton (at HMI)
F. Wire labels
G. All internal panel wiring
H. EMERGENCY STOP push button (maintained)
I. Duplex 120 VAC receptacle on panel interior
J. Internal power distribution with circuit breaker protection for all circuits, fused connections to instruments, internal power supplies, and all appurtenances necessary for a complete and functional system
K. Voltage surge suppression protection for PLC and HMI.
L. Dry contacts and PLC inputs/outputs to interface with Trimite filter controls per P&ID requirements.
M. Dry contact for remote alarm indication

2.1 Nameplates and Panel Labeling

All panel face mounted devices shall be properly labeled with engraved tags. All panel interior components and wiring shall be labeled with device tags corresponding to those listed on the electrical drawings.

A Shaw supplied nameplate shall be affixed to the panel exterior.

All warning and information labeling required by the referenced codes and standards shall be supplied and properly installed.

2.2 Control Panel

Enclosure shall be NEMA 4X.

Enclosure shall have a minimum of 30% spare space on subpanel for future usage.

2.3 PLC

PLC shall be Allen Bradley SLC 500 Series.

25% spare I/O shall be provided for digital and analog signals. Spare I/O shall be wired to terminal blocks.

2.4 Panel mounted devices

Push Buttons, indicating lights and operators shall be Allen Bradley series 800H, NEMA 4/4X.

2.5 Human-Machine Interface (HMI)

Operator interface terminal shall be Allen Bradley Panelview compatible color touch screen or Shaw approved alternate.

2.6 Wire

All internal panel wiring shall be stranded copper. Digital control wiring shall be 16 AWG min; power wiring shall be 14 AWG min.

Analog signal cable shall be 18 AWG (min), twisted pairs, with drain wire and overall shield for each pair.

2.7 Interposing Relays

Interposing relays shall be used for all digital outputs subject to transient power inrush (including all solenoid and motor starter coils). Power load shall not exceed PLC output card capacity.

2.8 Emergency Stop

Emergency stop shall de-energize all PLC outputs and force all analog outputs to 4mA. Power to PLC and HMI will not be affected.

3.0 Controls

3.1 Process Modes of Operation

The treatment system has four distinct modes to ensure the quality of the water produced by the process. These modes include:

FBR SYSTEM SHUTDOWN MODE
RUN MODE
FEED STOPPED MODE
FEED SHUTDOWN MODE

The active operating mode is displayed on the HMI display screen.

3.1.1 FBR SYSTEM SHUTDOWN mode

When the power is turned on the system shall be in FBR SYSTEM SHUTDOWN mode. To place the system in FEED STOPPED mode start the fluidization pump P-301A or P-301B.

FBR SYSTEM SHUTDOWN mode is also caused by an applicable alarm. This mode de-energizes the fluidization pump P-301A or P-301B, closes FV-301, and de-energizes well pumps P-110, P-120, P-130, and P-140, de-energizes chemical feed pumps P-701, P-702, P-703, P-704, P-705, and P-706, de-energizes the FBR Feed Pump P-201, closes FCV-201, de-energizes the Filter Influent Pump P-401, de-energizes Air Blower B-401, closes LCV-401, de-energizes the Reinjection Pump P-601, closes LCV-601, withdraws the Filter RUN Permissive, and de-energizes P-801

3.1.2 FEED STOPPED / RUN Modes

To enter RUN mode from FEED STOPPED mode, the following actions are taken by the process operator:

- The chemical feed pump OFF-AUTO switches are placed in the AUTO position. This will allow chemical feed pump operations to resume once the run permissives are granted.
- Start the Filter Influent Pump P-401 (LCV-401 remains closed until the Filter Service permissive is granted)
- Start the Air Blower B-401
- Start the FBR Feed Pump P-201 and
- Start the Well Pumps P-110, P-120, P-130, and P-140.
- Start the Trimite Filter (see Trimite Filter start-up instructions)
- Start the Reinjection Well pump P-601

- Enable the Backwash Submersible Pump P-801 by placing HAND-OFF-AUTO switch in AUTO position at HMI.

After the above actions are taken by the process operator the Trimite Filter RUN permissive is granted.

3.1.3 FEED SHUTDOWN Mode

A FEED SHUTDOWN is caused by an applicable alarm condition. A FEED SHUTDOWN de-energizes well pumps P-110, P-120, P-130, and P-140, de-energizes chemical feed pumps P-701, P-702, P-703, P-704, P-705, and P-706, de-energizes the FBR Feed Pump P-201, closes FCV-201, de-energizes the Filter Influent Pump P-401, de-energizes Air Blower B-401, closes LCV-401, de-energizes the Reinjection Pump P-601, closes LCV-601, withdraws the Filter RUN Permissive, and de-energizes P-801.

After the operator acknowledges the alarm condition, the FEED STOPPED mode is activated.

3.2 EXTRACTION WELLS

The extraction wells will be tied into the OU-1 Treatment System PLC (System PLC) to achieve an integrated control system.

Well Pumps (P-110, 120, 130, 140): Well pump HMI controls include a HAND-OFF-AUTO selector and a Soft START pushbutton. Well Pump MCC controls include a HAND-OFF-AUTO selector switch. Pump operation is initiated by operator selection of the AUTO position (at the HMI and MCC) and pressing the Soft START push button on the HMI. When in AUTO, the pumps will be shutdown upon a FEED SHUTDOWN or a FBR SYSTEM SHUTDOWN condition. In addition, each well pump will be controlled based on the well level controller, pressure switch and pump flow rates. For each well pump, a STOP pushbutton is also located local to the well. When the pump is in the AUTO or HAND position at the MCC or HMI, the pump can be STOPPED at the well. When the pump is in the OFF position at the MCC, the pump will remain off regardless of the position of the switch local to the well. When the pump is in the HAND position at the MCC or HMI all associated interlocks are bypassed (for troubleshooting purposes only).

Level controls: Controls for each well includes a level transducer that transmits a level signal to the System PLC. A LOW level in a well (LSL-110, 120, 130, 140) will trigger a shutdown of the corresponding well pump. The submersible pumps will need to be manually restarted after a LOW level shutdown event once conditions return to normal. All levels switches are operator adjustable parameters. The levels will be set to

protect the pump from operating without the required height of water above the pump.

Pressure controls: Controls for each well includes one fixed point pressure switch LOW (PSL-110, 120, 130, 140), which sends a signal to the System PLC and triggers an alarm and a shutdown of the corresponding pump. This condition is indicative of a piping failure.

Flow Controls: Controls for each well include a flow transmitter (FT-110, 120, 130, 140) that transmits a flow rate signal to the System PLC. Within the System PLC, the flow is totalized and there are operator adjustable LOW flow and HIGH flow alarms. A LOW flow alarm may be indicative of a pump malfunction and will trigger an alarm for information only. A HIGH flow alarm is indicative of a piping failure and will trigger a shutdown of the corresponding pump.

An operator selected LOW flow rate (FAL-150) and a HIGH flow rate (FAH-150) will trigger alarms, but no other action. The flow signal from FC-150 will also be used to control chemical feed rates (see Section 3.14).

A pressure transmitter (PT-150) transmits a signal to the System plant PLC. LOW pressure (PAL-150) is indicative of a failure of the bag filter (F-10) and will trigger a FEED SHUTDOWN. HIGH pressure (PSH-150) is indicative of a clogged filter bag (F-10) or GAC System and will trigger an alarm, but no other action.

3.3 GRANULATED ACTIVATED CARBON SYSTEM

There are no automated control signals being passed to or from these units. A GAC Backwash Tank and pump are provided to manually control GAC backwash events.

A recirculation line with a manual flow control valve is provided from the GAC Backwash Return Pump (P-202) discharge to the top of the GAC Backwash Tank to protect against operations below minimum pump flow conditions. A HAND-OFF switch and a soft START pushbutton are located on the HMI for pump P-202 control.

3.4 FBR FEED

Water treated by the GAC vessels is discharged to the FBR Feed Tank, T-201. Level within the FBR Feed Tank is controlled by FCV-201, which modulates in response to LC-201 output signal as follows:

Level controller LC-201 controls FCV-201 position in proportion to tank level based on the following operator set parameters:

- FCV-201 Max Flow Position (0 – 100%, 40% Default)
- Maximum Flow T-201 Level (12" – 132", 110" Default)
- Minimum Flow T-201 Level (0 – 300", 60" Default)

When T-201 level is at or above the Maximum Flow T-201 Level, FCV-201 position is set at the Maximum Flow FCV-201 position.

When T-201 level is at or below the Minimum Flow T-201 Level, FCV-201 position is set at the closed position.

When T-201 level is between the Maximum Flow T-201 Level and the Minimum Flow T-201 Level, LCV -401 position is calculated by the PLC as follows:

FCV-201 Position (%) = [(Maximum Flow FCV-201 position)*(T-201 Level - Minimum Flow T-201 Level)] / (Maximum Flow T-201 Level - Minimum Flow T-201 Level))

Provisions are included for manual valve position set-point.

Pump HMI controls include a HAND-OFF-AUTO selector and a soft START pushbutton. Pump operation may be initiated by operator selection of the START button on the HMI when the pump mode is in the FEED STOPPED mode.

A recirculation line with a manual flow control valve is provided from the FBR Feed Pump discharge to the top of the FBR Feed Tank to protect against operations below minimum pump flow conditions.

3.5 FLUIDIZATION PUMPS P-301A/B

Pump HMI controls include an OFF-AUTO selector and a soft START pushbutton. Pump operation is initiated by operator selection of the AUTO position and pressing the soft START push button on the HMI. The pump shall continue to operate while the START button is selected, overriding the PSL-301 and PSH-301 pressure switch alarms.

3.6 FLUIDIZATION VALVE FV-301

FV-301 is a pneumatically actuated butterfly valve with a spring to close, air to open actuator. On loss of air or power, or during an applicable alarm condition, FV-301 will close, stopping water from entering the FBR system.

During normal startup of the P-301 A/B the fluidization valve (FV-301) will only open after positive pressure is detected by closure of the associated pressure switch (PSL-301) contact and a run indication is received from the associated pump motor starter auxiliary contact.

3.7 AERATION AIR BLOWER B-401

Blower controls include a HAND-OFF-AUTO selector and a soft START pushbutton. Blower operation is initiated by operator selection of the AUTO position and pressing the soft START push button. The blower shall continue to operate while the START button is selected, overriding the PSL-401 pressure switch alarm. If PSL-401 detects a LOW blower discharge pressure, a control signal is provided to the System PLC. The PLC then will shut down the blower and initiate the FEED SHUTDOWN mode.

3.8 AERATION TANK T-401 LEVEL CONTROL

Level controller LC-401 controls LCV-401 position in proportion to tank level based on the following operator set parameters:

- Maximum Flow LCV-401 Position (0 – 100%, 40% Default)
- Maximum Flow T-401 Level (0 – 300", 120" Default)
- Minimum Flow T-401 Level (0 – 300", 90" Default)

When T-401 level is at or above the Maximum Flow T-401 Level, LCV-401 position is set at the Maximum Flow LCV-401 position.

When T-401 level is at or below the Minimum Flow T-401 Level, LCV-401 position is set at the closed position.

When T-401 level is between the Maximum Flow T-401 Level and the Minimum Flow T-401 Level, LCV -401 position is calculated by the PLC as follows:

LCV-401 Position (%) = [(Maximum Flow LCV-401 position)*(T-401 Level - Minimum Flow T-401 Level)] / (Maximum Flow T-401 Level - Minimum Flow T-401 Level))

Provisions are included for manual valve position set-point.

The System PLC also accepts signals from the Trimite Filter PLC. When the Trimite Filter issues a control signal requesting a Clarifier flush and removing LCV-401/Chem. Feed Permissive signal, LCV-401 will close

while the Trimite Clarifier bed is air scoured. As the Trimite PLC progresses through the Clarifier flush sequence, it will call for LCV-401 to open to an operator adjustable preset position (by maintaining the Clarifier Flush signal while giving LCV-401/Chem. Feed Permissive) to hydraulically cleanse the Clarifier bed. The Trimite PLC will continue to control LCV-401 as needed (by maintaining Clarifier Flush signal and removing/giving LCV-401/Chem. Feed permissive signal) until after the clarifier rinse to waste cycle, at which point the control of LCV-401 will revert to LC-401 (by removal of the Clarifier Flush signal and giving LCV-401/Chem. Feed Permissive signal).

If the level within T-401 reaches the HIGH or HIGH-HIGH level switch position during a Clarifier flush sequence, the flush cycle is terminated, and will intiate the FEED SHUTDOWN mode. A FEED SHUTDOWN is also initiated if the level within T-401 reaches the LOW level alarm position during a Clarifier flush sequence.

When the system is in the FEED STOPPED mode, LCV-401 remains closed until P-401 is started and the Trimite filter operation resumes.

3.9 FILTER INFLUENT PUMP (P-401) CONTROL

Pump HMI controls include a HAND-OFF-AUTO selector and a soft START pushbutton. Pump operation may be initiated by operator selection of the START button on the HMI when the pump mode is in the FEED STOPPED mode.

A recirculation line with a manual flow control valve is provided from the Filter Influent Pump discharge back to the Aeration Tank to protect against operations below minimum pump flow conditions and to allow P-401 to operate during a Trimite Filter backwash cycle.

3.10 TRIMITE FILTER CONTROL

The Trimite Filter operations are supervised and controlled by a dedicated PLC supplied with the Trimite package. Reference US Filter Trimite O&M manual for detailed operation instructions.

In normal operations, polymer and coagulant are injected into the process line downstream of the Filter Influent Pump. Influent then enters the Trimite Filter Clarifier influent header, located near the bottom of the Filter Clarifier. The water flows up through the Filter Clarifier bed, and flows over the trough weir and into the Mixed Media Filter. Water passes through the filter media into the Trimite Filter under-drain system, which carries filtered water out .

As solids accumulate within the Filter Clarifier, the differential pressure across the Filter Clarifier bed will increase. When the bed inlet pressure

increases to the pressure setpoint of PSH-501, a Clarifier Flush Cycle is initiated.

CLARIFIER FLUSH CYCLE:

Step 1- Stop flow through the Trimite.
Step 2- Air scour- Air only, 2-4 minutes.
Step 3- Flush to waste, Air and influent flow, 3-4 minutes.
Step 4- Bed leveling- Air only, 30-45 seconds.
Step 5- Bed settle- No air or influent flow, 30-45 seconds.
Step 6- Rinse-to-waste- Influent flow only, 5-8 minutes.
Step 7- Return to service.

As solids accumulate within the Mixed Media Filter, the differential pressure across the Mixed Media bed will increase. When the bed discharge pressure decreases to the pressure setpoint of PSL-502, a backwash Cycle is initiated.

FILTER BACKWASH CYCLE:

Step 1- Stop flow through the Trimite. Effluent flow to the Filter Effluent Tank continues, to drain down the filter to within 6" of media top surface. This step takes approximately 4 minutes, and is controlled by a LOW level switch.

Step 2- Air scour- air, combined with low rate backwash water, refills the filter to near lip of collection trough. This step takes approximately 8 minutes, and is controlled by a level transmitter.

Step 3- Stop the air flow, and allow the low rate backwash to continue. This step takes 45 seconds, and purges any remaining air from the media.

Step 4- Increase backwash rate to its nominal rate. (3-5 minutes)

Step 5- Stop high rate backwash flow, unit goes into filter-to-waste cycle.

Step 6- Filter- to-waste is at nominal unit service flow rate, 5-10 minutes, and then return the Trimite Filter to service.

Notes:

1- The flush cycle is independent of the backwash cycle. However, a filter backwash includes a clarifier flush cycle as the first step.

2- A more complete description of the Trimite control system will be supplied under separate cover by US Filter-Memcor.

3- Trimite Filter Flush or Backwash are only permitted by the System PLC when the system is in the RUN mode. Flush or Backwash is displayed on the System PLC HMI.

3.10.1 FILTER CONTROL SIGNALS

A number of control signals pass between the System PLC and the Filter PLC.

Control signals passing from the System PLC to the Trimite Filter PLC include the following:

The System PLC provides the following signals to the Trimite Filter:

- RUN command: enables Trimite Filter to process water. Disabled on FEED SHUTDOWN or LALL-502.
- BACKWASH PUMP PERMISSIVE: enables Trimite Filter Backwash Pump. Disabled on LALL-502.
- BACKWASH & CLARIFER FLUSH PERMISSIVE: enables Trimite Filter backwash & flush cycles. Disabled on LALL-502, LAH-801.

Control Signals passing from the Trimite Filter PLC to the System PLC include the following

- ON-LINE Signal: Indicates that the Filter has no alarms. Disabled on Filter malfunction.
- BACKWASH Signal: Indicates that Filter is in Backwash cycle indicating that LCV-401 is to be closed.
- FILTER CLARIFIER FLUSH: Indicates that Filter Clarifier is in Flush Cycle
- LCV-401 AND CHEMICAL FEED PERMISSIVE Signal: Indicates that LCV-401 operate in level control mode and P-703 and P-704 shall operate. During Clarifier Flush indicates that LCV-401 be maintained at flush setpoint (or closed, as required).
- HIGH TURBIDITY ALARM: Alarm only

3.11 FILTER SUPPORT EQUIPMENT

The Trimite Air Blower, B-501, the Filter Effluent Pump, P-501, Filter Backwash Pump, P-502, and the Trimite Filter are directly controlled by the Trimite Filter PLC.

3.12 FILTER EFFLUENT/BACKWASH TANK LEVEL CONTROL

The Filter Effluent/Backwash Tank is the source of backwash water for the Mixed Media Filter. To ensure an adequate amount of water for the filter backwash cycle, the tank is equipped with a level controller. Level within the

Filter Effluent/Backwash Tank is controlled by LCV-601 which modulates in response to LC-502 output signal.

Level controller LC-502 controls LCV-601 position in proportion to tank level based on the following operator set parameters:

- Maximum Flow LCV-501 Position (0 – 100%, 40% Default)
- Maximum Flow T-501 Level (12" – 132", 120" Default)
- Minimum Flow T-501 Level (12" – 132", 90" Default)

When T-501 level is at or above the Maximum Flow T-501 Level, LCV-601 position is set at the Maximum Flow LCV-601 position.

When T-501 level is at or below the Minimum Flow T-501 Level, LCV-601 position is set at the closed position.

When T-501 level is between the Maximum Flow T-501 Level and the Minimum Flow T-501 Level, LCV -601 position is calculated by the PLC as follows:

LCV-601 Position (%) = [(Maximum Flow LCV-601 position)*(T-501 Level - Minimum Flow T-501 Level)] / (Maximum Flow T-501 Level - Minimum Flow T-501 Level))

GAC Backwash Pump P-602 HMI controls include an OFF-AUTO selector and a soft STAR pushbutton. Pump operation is initiated by operator selection of the AUTO position and pressing the soft STAR push button on the HMI.

3.13 REINJECTION WELLS

Treated water from the Filter Effluent/Backwash Tank T-501 is pumped to Reinjection Wells W-610, W-620, W-630, and W-640. The total flow rate, flow rate into each well, and level in each well are monitored by the System PLC via flow and level transmitters. The System PLC totalizes the cumulative flow from each transmitter.

Level controls: Controls for each well includes a level transducer that transmits a level signal to the main System PLC. A HIGH level in a well (LAH-610, 620, 630, 640) will trigger a FEED SHUTDOWN. All level switches are operator adjustable parameters.

Pressure controls: Controls for the header include a pressure transmitter, LOW pressure (PAL-601) sends a signal to the System PLC and triggers an alarm and a FEED SHUTDOWN. This condition is indicative of a piping failure.

Flow Controls: Controls for each well includes a flow transmitter (FT-610, 620, 630, 640) that transmits a flow rate signal to the PLC. Within the PLC, the flow is totalized and there are operator adjustable LOW flow and HIGH flow alarms. A LOW flow alarm is indicative of a pump malfunction and will trigger an alarm for information only. A HIGH flow alarm is indicative of a piping failure and will trigger a FEED SHUTDOWN.

The PLC will also totalize the flow from FT-601. An operator selected LOW flow rate (FAL-601) and a HIGH flow rate (FAH-601) will trigger alarms but no other action.

3.14 NUTRIENT, ELECTRON DONOR, COAGULANT, and POLYMER FEED CONTROL (CHEMICAL FEED PUMPS P-701, P-702, P-703, P-704, P-705, and P-706)

3.14.1 NUTRIENT PUMP FLOW CONTROL

The nutrient pump HMI controls shall include an OFF-AUTO selector switch. The pump shall be automatically controlled in proportion to feed flow (FC-150). An operator adjustable factor shall be provided in the software for the pump to adjust the proportionality constant and thereby adjust pump output as required. Adjustment shall be at the HMI.

Pump Speed % = (FI %)*K
K = user set proportionality constant (0 to 2.00 range)

When the nutrient flow rate falls to the setting of FAL-701, a FEED SHUTDOWN will be initiated.

3.14.2 ELECTRON DONOR PUMP FLOW CONTROL

The electron donor pump HMI controls shall include an OFF-AUTO selector switch. The pump shall be automatically controlled in proportion to feed flow (FC-150).

An operator adjustable factor shall be provided in the software for the pump to adjust the proportionality constant and thereby adjust pump output as required. Adjustment shall be at the HMI.

Pump Speed % = (FI %)*K
K = user set proportionality constant (0 to 2.00 range)

When the electron donor flow rate falls to the setting of FAL-702, a FEED SHUTDOWN will be initiated

3.14.3 COAGULANT AND POLYMER PUMP FLOW CONTROL

There are two sets of coagulant and polymer pumps in use by the OU-1 Treatment System. The first set supplies coagulant and polymer to the

Trimite Filter, and the second set supplies coagulant and polymer to the Clarifier, T-802.

TRIMITE FILTER COAGULANT AND POLYMER PUMPS
The coagulant and polymer pump (P-703 and P-704) feed sequences are controlled by the Trimite Filter PLC. While the Trimite Filter is in normal operation, polymer will be delivered to the filter in proportion to feed flow (FC-150 output) with an operator adjustable proportionality constant (at System PLC). No polymer is delivered during filter flush and backwash sequences. The coagulant dosing rate is modulated based on the turbidity and influent flow rate (based on FC-150) of the filter effluent water (AC-501) within the Trimite System.

CLARIFIER COAGULANT AND POLYMER PUMPS
The coagulant and polymer pump (P-705 and P-706) feed sequences are controlled by the operation of the Backwash Submersible Pump P-801. While the Backwash Submersible Pump P-801 is in operation, polymer and coagulant will be delivered to the clarifier. P-801 is deenergized during a FEED SHUTDOWN and at LAH-201 and LAHH-201.

3.15 BACKWASH HOLDING SUMP

Backwash water from the Trimite Filter, excess biomass from the fluid bed reactor, and the GAC System tank drain flows to the Backwash Holding Sump. The sump is fitted with a level control system. When the liquid level within the sump rises above the position of the LOW level setpoint LSL-801, the Backwash Submersible Pump P-801 will energize. After the sump level falls to the low level setpoint position minus six-inches, the P-801 will deenergize. The minimum operator set level for LSL-801 shall be above pump p-801 minimum submergence level plus 6 inches. When the liquid level within the sump rises to either the LAH-801 or LAHH-802 position, the Trimite Filter backwash sequence will be terminated and a FEED SHUTDOWN will be initiated.

3.16 CLARIFIER

Backwash Submersible Pump, P-801, pumps water from the sump to the Clarifier T-802. When P-801 operates, coagulant and polymer are added to the P-801 discharge line. The Clarifier T-802 is designed to allow time for the suspended solids within the backwash water to settle and accumulate at the bottom of T-802. Clarified water from the top of T-802 is returned to the FBR Feed Tank T-201 by gravity flow. Concentrated solids at the bottom of T-802 are discharged from the tank through manually operated plug valve V-810.

3.17 AIR COMPRESSOR

The air compressor shall operate independently of the system PLC controls.

4.0 Alarms

Following is a list of all system alarms:

PARAMETER	ALARM NAME	RANGE	DEFAULT VALUE	RESULT OF ALARM [2,3]	TIME DELAY
PAL-110	LOW WELL PUMP DISCHARGE PRESSURE	Fixed point pressure switch		WELL PUMP SHUTDOWN	5 sec.
FAL-110	LOW WELL PUMP FLOW RATE	0 – 150 gpm	50 gpm	INFORMATION ONLY	2 sec.
PAL-120	LOW WELL PUMP DISCHARGE PRESSURE	Fixed point pressure switch		WELL PUMP SHUTDOWN	5 sec.
FAL-120	LOW WELL PUMP FLOW RATE	0 – 150 gpm	20 gpm	INFORMATION ONLY	2 sec.
PAL-130	LOW WELL PUMP DISCHARGE PRESSURE	Fixed point pressure switch		WELL PUMP SHUTDOWN	5 sec.
FAL-130	LOW WELL PUMP FLOW RATE	0 – 150 gpm	50 gpm	INFORMATION ONLY	2 sec.
PAL-140	LOW WELL PUMP DISCHARGE PRESSURE	Fixed point pressure switch		WELL PUMP SHUTDOWN	5 sec.
FAL-140	LOW WELL PUMP FLOW RATE	0 – 150 gpm	20 gpm	INFORMATION ONLY	2 sec.
FAL-150	LOW WELL FIELD FLOW RATE	0 – 400 gpm	100 gpm	INFORMATION ONLY	2 sec.
FAH-110	HIGH EXTRACTION FLOW -110	0-150 gpm	140 gpm	SHUT DOWN ASSOCIATED EXTRACTION PUMP	
FAH-120	HIGH EXTRACTION FLOW -120	1-150 gpm	60 gpm	SHUT DOWN ASSOCIATED EXTRACTION PUMP	
FAH-130	HIGH EXTRACTION FLOW -120	0-150 gpm	140 gpm	SHUT DOWN ASSOCIATED EXTRACTION PUMP	
FAH-140	HIGH EXTRACTION FLOW -140	1-150 gpm	60 gpm	SHUT DOWN ASSOCIATED EXTRACTION PUMP	
LSL-110	EXTRACTION WELL LOW LEVEL - 110	0 to 250ft	5 ft	SHUT DOWN ASSOCIATED EXTRACTION PUMP	
LSL-120	EXTRACTION WELL LOW LEVEL – 120	0 to 235ft	5 ft	SHUT DOWN ASSOCIATED EXTRACTION PUMP	
LSL-130	EXTRACTION WELL LOW LEVEL -130	0 to 250ft	5 ft	SHUT DOWN ASSOCIATED EXTRACTION PUMP	

PARAMETER	ALARM NAME	RANGE	DEFAULT VALUE	RESULT OF ALARM[2,3]	TIME DELAY
LSL-140	EXTRACTION WELL LOW LEVEL -140	0 to 250ft	5 ft	SHUT DOWN ASSOCIATED EXTRACTION PUMP	
FAH-150	HIGH WELL FIELD FLOW RATE	0 – 400 gpm	375 gpm	INFORMATION ONLY	2 sec.
PAL-150	LOW WELL FIELD LINE PRESSURE	0 – 100 psig	10 PSI	FEED SHUTDWON	5 sec.
PAH-150	HIGH WELL FIELD LINE PRESSURE	0 – 100 psig	40 PSI	INFORMATION ONLY	5 sec.
LAL-201	LOW FBR FEED TANK LEVEL	12" to 132"	48-inches	FBR FEED PUMP SHUTDOWN, FEED SHUTDOWN	2 sec.
LAH-201	HIGH FBR FEED TANK LEVEL	12" to 132"	T.B.A.	FEED SHUTDOWN, SHUTDOWN P-801	2 sec.
LAHH-201	HIGH-HIGH FBR FEED TANK LEVEL	Fixed point level switch		FEED SHUTDOWN, Shutdown P-801	2 sec.
AAH-301	HIGH PH, FBR FEED	1 – 14	8	FEED SHUTDOWN	30 sec.
AAL-301	LOW PH, FBR FEED	1 – 14	6	FEED SHUTDOWN	30 sec.
TAH-301	HIGH FBR TEMPERATURE	0 – 50°C	40°C	INFORMATION ONLY	2 sec.
PAL-301	LOW FBR FLUIDIZATION PRESSURE	Fixed point switch – set at Switch (1 psi below static pressure)		FBR SYSTEM SHUTDOWN Alarms reset w/ FBR start	2 sec.
PAH-301	HIGH FBR FLUIDIZATION PRESSURE	Fixed point switch – set at Switch (Normal discharge head plus ½ of increase to dead-head pressure)		FBR SYSTEM SHUTDOWN Alarms reset w/ FBR start	2 sec.
PAL-401	LOW AERATION AIR PRESSURE	Fixed point switch – set at Switch (2.0 psi)		FBR SYSTEM SHUTDOWN B-401 SHUTDOWN	2 sec.
LAL-401	LOW AERATION TANK LEVEL	Fixed point level switch		SHUTDOWN P-401 AND CLOSE LCV-401, FEED SHUTDOWN	2 sec.
LAH-401	HIGH AERATION TANK LEVEL	Fixed point level switch		FEED SHUTDOWN	2 sec.
LAHH-402	HIGH-HIGH AERATION TANK LEVEL	Fixed point level switch		FEED SHUTDOWN	2 sec.

PARAMETER	ALARM NAME	RANGE	DEFAULT VALUE	RESULT OF ALARM[2,3]	TIME DELAY
PSH-505	Displayed at and acted upon by Trimite PLC				
PSHH-501	Displayed at and acted upon by Trimite PLC				
LSL-501	Displayed at and acted upon by Trimite PLC				
LALL-502	LOW-LOW FILTER EFFLUENT/BACK WASH TANK LEVEL	12" to 132"	18 inches	Withdraw Trimite Filter Service Permissive, Shutdown P-601 and P-602, Close LCV-601 and initiate FEED SHUTDOWN	2 sec.
LAL-502	LOW FILTER EFFLUENT/BACK WASH TANK LEVEL	12" to 132"	9'-0"	Trimite Filter Backwash Initiate Permissive	2 sec.
LAH-502	HIGH FILTER EFFLUENT/BACK WASH TANK LEVEL	12" to 132"	132 inches	FEED SHUTDOWN	2 sec.
LAHH-501	HIGH-HIGH FILTER EFFLUENT/BACK WASH TANK LEVEL	Fixed point level switch		FEED SHUTDOWN	2 sec.
AAH-501	HIGH EFFLUENT TURBIDITY	T.B.A.	5 N.T.U.	Information Only	2 sec.
PAL-601	LOW REINJECTION LINE PRESSURE	0 to 100 psi	5 psi	FEED SHUTDOWN, Close LCV-601, Shutdown P-601	2 sec.
FAL-601	LOW REINJECTION FLOW	0 – 400 GPM	120 GPM (Estimate)	INFORMATION ONLY	2 sec.
FAH-601	HIGH REINJECTION FLOW	0 – 400 GPM	300 gpm (Estimate)	FEED SHUTDOWN, Close LCV-601, Shutdown P-601	2 sec.
PAL-610	LOW REINJECTION WELL PRESSURE	Fixed point pressure switch		FEED SHUTDOWN, Close LCV-601, Shutdown P-601	5 sec.
FAL-610	LOW REINJECTION WELL FLOW	0 – 150 GPM	30 GPM (Estimate)	INFORMATION ONLY	2 sec.
FAH-610	HIGH REINJECTION WELL FLOW	0 – 150 GPM	70 gpm (Estimate)	FEED SHUTDOWN	2 sec.
PAL-620	LOW REINJECTION WELL PRESSURE	Fixed point pressure switch		FEED SHUTDOWN	5 sec.

PARAMETER	ALARM NAME	RANGE	DEFAULT VALUE	RESULT OF ALARM[2,3]	TIME DELAY
FAL-620	LOW REINJECTION WELL FLOW	0 – 150 GPM	30 GPM (Estimate)	INFORMATION ONLY	2 sec.
FAH-620	HIGH REINJECTION WELL FLOW	0 – 150 GPM	70 gpm (Estimate)	FEED SHUTDOWN	2 sec.
LAH-610	HIGH REINJECTION WELL LEVEL	0 to 250 ft	150 ft	FEED SHUTDOWN, Close LCV-601, Shutdown P-601	
LAH-620	HIGH REINJECTION WELL LEVEL	0 to 250 ft	150 ft	FEED SHUTDOWN, Close LCV-601, Shutdown P-601	
LAH-630	HIGH REINJECTION WELL LEVEL	0 to 250 ft	150 ft	FEED SHUTDOWN, Close LCV-601, Shutdown P-601	
LAH-640	HIGH REINJECTION WELL LEVEL	0 to 250 ft	150 ft	FEED SHUTDOWN, Close LCV-601, Shutdown P-601	
PAL-630	LOW REINJECTION WELL PRESSURE	Fixed point pressure switch		FEED SHUTDOWN	5 sec.
FAL-630	LOW REINJECTION WELL FLOW	0 – 150 GPM	30 GPM (Estimate)	INFORMATION ONLY	2 sec.
FAH-630	HIGH REINJECTION WELL FLOW	0 – 150 GPM	70 gpm (Estimate)	FEED SHUTDOWN	2 sec.
PAL-640	LOW REINJECTION WELL PRESSURE	Fixed point pressure switch		FEED SHUTDOWN	5 sec.
FAL-640	LOW REINJECTION WELL FLOW	0 – 150 GPM	30 GPM (Estimate)	INFORMATION ONLY	2 sec.
FAH-640	HIGH REINJECTION WELL FLOW	0 – 150 GPM	70 gpm (Estimate)	FEED SHUTDOWN	2 sec.
FAL-701	LOW FLOW NUTRIENT	See note 1		FEED SHUTDOWN	60 sec.
FAL-702	LOW FLOW ELECTRON DONOR	See note 1		FEED SHUTDOWN	60 sec.
LAH-801	HIGH BACKWASH HOLDING SUMP LEVEL	0" to 250"	120"	Shutdown Trimite Backwash and FEED SHUTDOWN	2 sec.
LAHH-801	HIGH-HIGH BACKWASH HOLDING SUMP LEVEL	Fixed point level switch		Shutdown Trimite Backwash and FEED SHUTDOWN	2 sec.

Notes:

1. Reference LMI literature related to flow switch operation.
2. All Alarms that are NOT for INFORMATION ONLY require operator acknowledgement and reset before equipment may be restarted.
3. INFORMATION ONLY alarms are not indicated on local alarm horn or guard shed alarm panel dry contact.

6.0 Skid Wiring

Skid wiring shall be run in rigid, watertight conduit. Flexible conduit may be used for short runs, not more than 3 feet long. Longer runs of flexible conduit or cord may be used for probes that require routine calibration, I.E.: pH probes.

7.0 Human-Machine Interface Terminal

Screens shall be designed for intuitive operation and ease of operation. Graphics shall be provided to illustrate the systems and show the status of all motor driven equipment and automated valves. All MODES information and selections shall be readily accessible. All process and alarms information and operator adjustable parameters shall be readily accessible for operator review and modification.

APPENDIX G –
Nutrient and Electron Donor Spreadsheet Requirement

Version 9/15/04
Input Parameters by Operator are in Italics

FBR ELECTRON DONOR REQUIREMENT	Value	Typical Value
Input Parameters (by Operator)		
Feed NO_3^--N (mg/l)	*11.5*	5.4 to 11.5
Feed ClO_4^- (mg/l)	*3.6*	3.6
Feed DO (mg/l)	*2.6*	2.0 to 2.6
Feed Flow (gpm)	*250*	100 to 250
Excess Acetic Acid Desired (% Excess)	*50*	30 to 50; 100% is 2x Theoretical Requirement, 200% is 3x Theoretical Requirement
Calculations		
100% Acetic Acid Required (lbs/day)[1]	199.8	
50% (v/v) Acetic Acid Required (gpd)[1]	**45.7**	
FBR NITROGEN REQUIREMENT		
Input Parameters (by Operator)		
Feed NH_3^+-N (mg/l) [Ammonia-N]	*0.07*	
Calculations		
Feed NH_3^+-N + NO_3^--N Required (mg/l)[3]	3.6	
Measured NH_3^+-N + NO_3^--N (mg/l)	11.6	
Is supplementation nitrogen required?[4]	**No**	
FBR ORTHO-PHOSPHATE-P REQUIREMENT		
Excess Nutrients Desired (% Excess)[5]	*30*	*0 to 100; 100% is 2x Theoretical Requirement, 200% is 3x Theoretical Requirement*
Calculations		
Ortho-phosphate-P Required (lbs/day)[6]	0.49	
Nutrient Solution Required (gpd)[7]	1.59	

1. Equals 0.012 x [3.37 x NO3--N + 0.69 x ClO4- + 1.2 x DO] x [1 - (% Excess AA)/100] x Feed Flow. Modified from EPA/625/R-93/010 - Nitrogen Control Manual (September 1993), p. 103.

2. Equals (lbs/day 100% Acetic Acid)/4.37
3. Equals [3.37 x NO3--N + 0.69 x ClO4- + 1.2 x DO] x [1 - (% Excess AA)/100] x 1.07/20. Assumes a BOD:P ratio of 100:5 and a
4. If the measured concentrations of (NH_3^+-N + NO_3^--N) and greater than or equal to the required (NH_3^+-N + NO_3^--N)
5. Excess P may be required to consume BOD in feed water other than acetic acid.
6. Equals (lbs/day 100% Acetic Acid x 1.07)/100. Assumes a BOD:P ratio of 100:1 and a BOD conversion factor of 1.07 for acetic
7. Equals (lbs/day of Ortho-phosphate-P)/(PO_4^{-3}-P Conc.) x [1 - (% Excess Nutrients)/100]