Technical Memorandum

Lincoln Avenue Water Company (LAWC) Treatment System
National Aeronautics and Space Administration,
Jet Propulsion Laboratory, Pasadena, California

NAS7.010359
NASA-JPL
SSIC No. 9661

Final May 3, 2005

This technical memorandum documents the performance of the groundwater treatment system implemented at the Lincoln Avenue Water Company (LAWC). The treatment system was implemented as a removal action as part of the Comprehensive Environmental Response, Compensation, and Liability Act (CERCLA) program at the National Aeronautics and Space Administration (NASA) Jet Propulsion Laboratory (JPL). The Action Memorandum for this removal action was signed on August 23, 2004[1]. Table 1 is an overview of the system operations, which began on July 28, 2004.

Table 1. LAWC System Operational Summary (Through March 31, 2005)

Parameter	Units	LAWC #3	LAWC #5	Total
Total Volume of Groundwater Extracted	gallons	312,042,235	172,005,396	484,047,630
Mass of Perchlorate Removed	lbs	60.42	6.75	67.17
Mass of Carbon Tetrachloride (CCl_4) Removed	lbs	7.29	0	7.29
Mass of Trichloroethene (TCE) Removed	lbs	8.33	6.75	15.08

* Samples collected from LAWC#5 have contained detectable concentrations of CCl_4.

BACKGROUND

Liquid wastes generated at JPL in the 1940s and 1950s (such as cleaning solvents, solid and liquid rocket propellants, cooling tower chemicals, and analytical laboratory chemicals) were disposed of in seepage pits, a then common and acceptable practice. Some of these wastes contained chemicals (e.g., perchlorate and chlorinated solvents containing volatile organic compounds [VOCs]) that have been found in groundwater beneath and adjacent to JPL, including groundwater extracted from two drinking water wells operated by LAWC (LAWC#3 and LAWC#5). Figure 1 is a location map showing JPL and the LAWC production wells.

In 1981, VOCs were first detected in LAWC#3 and LAWC#5. By 1984, VOC concentrations were increasing and both wells were shut down. With NASA funding, LAWC installed a VOC treatment facility for the wells in the early 1990s. NASA funded the ongoing operations of the plant as well. The existing VOC treatment facility consists of four 12-ft-diameter treatment vessels (Calgon Carbon Model 12 Adsorption Systems), each containing 20,000 lb of liquid-phase granular activated carbon (LGAC). The LGAC treatment facility was operated under an Operations Plan approved by the California Department of Health Services (DHS) (revised September 2002).

Perchlorate concentrations were first detected in samples collected from the LAWC wells in 1997, when an improved analytical method, using ion chromatography, was developed to detect low levels of perchlorate. Since 1997, perchlorate concentrations in samples from the LAWC wells have ranged

[1] NASA. 2004. Action Memorandum for the Lincoln Avenue Water Company (LAWC), Altadena, California Associated with Groundwater Cleanup at the National Aeronautics and Space Administration, Jet Propulsion Laboratory, Pasadena, California. August.

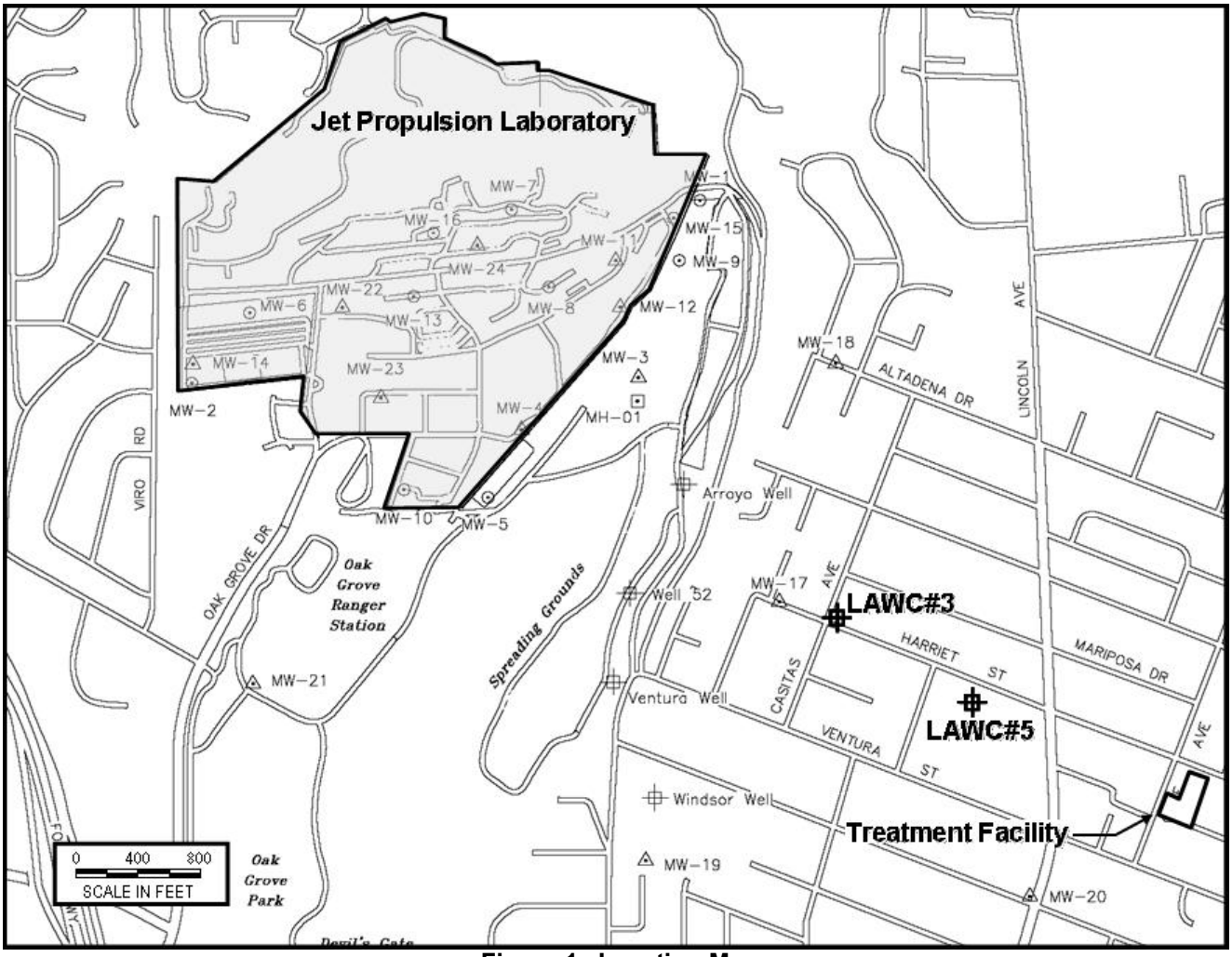

Figure 1. Location Map

from less than 4 micrograms per liter (µg/L) to 31.0 µg/L. In July 2004, an ion exchange system was incorporated into the treatment train at LAWC, consisting of LGAC, chlorination, and blending with Foothill Municipal Water District (FMWD) water in the Olive Sump. Water in the Olive Sump is pumped into the distribution system for potable use by LAWC customers. A process flow diagram for this entire treatment system is provided as Figure 2.

Ion exchange (IX) treatment consists of a USFilter Model HP1220DS Hi-Flow System. The HP1220DS System has two 12-ft-diameter ion exchange vessels, with a nominal treatment capacity of 2,000 gpm. Each ion exchange unit contains 300 cubic feet of Rohm and Haas, Amberlite™ PWA2 Strongly Basic Anion Exchange Resin, which is designed for selective removal of perchlorate from potable water. DHS issued a permit amendment on July 26 for the LAWC system, a copy of which is provided as Attachment 1.

TREATMENT SYSTEM MODIFICATIONS

Due to fine particles in the groundwater extracted from LAWC#3 and LAWC#5, bag filters were installed in late December 2004 to eliminate fouling of the ion exchange units. The bag filter unit installed is a Hayward Industrial Maxiline MBF HE, which is a pressurized, stainless steel unit that uses eight individual, disposable bag filters. Attachment 2 provides the manufacturers' specifications and design details.

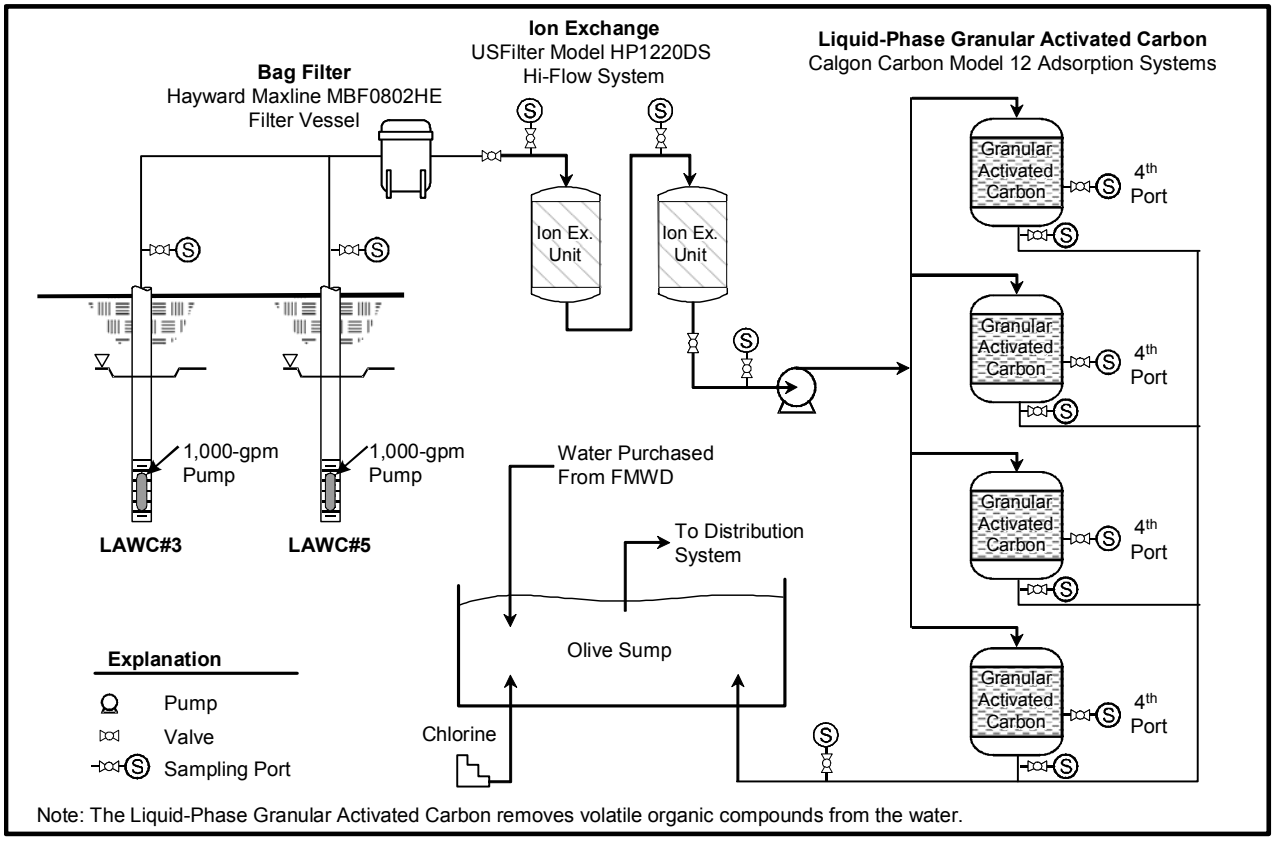

Figure 2. Process Flow Diagram

LAWC#3, LAWC#5, AND MW-17

Table 2 summarizes carbon tetrachloride (CCl_4), trichloroethene (TCE), and perchlorate concentrations detected in LAWC#3 and LAWC#5. Figures 3 and 4 are graphs of historical concentrations in groundwater samples collected from LAWC#3 and LAWC#5.

NASA-JPL has a multiport monitoring well, MW-17, located less than 500 ft upgradient of LAWC#3 (see Figure 1). Table 2 summarizes CCl_4, TCE, and perchlorate detections in samples collected from the five sampling screens (discrete sampling intervals) of MW-17. This monitoring well serves as the best available indicator of near-future (1-2 years) concentrations that may be observed in LAWC wells. Figures 5, 6, and 7 provide the historical concentrations of CCl_4, TCE, and perchlorate in MW-17. Recent sampling of MW-17 (Screen 3) indicates a decreasing trend, with a detected concentration of 76 µg/L during the first quarter 2005 sampling event. The highest concentration detected in MW-17 (Screen 3) was 209.0 µg/L in July/August 2003.

Table 2. Summary of Chemical Data

Analyte	Units	LAWC#3		LAWC#5		MW-17 (Maximum Levels)					Regulatory Level
		Min	Max	Min	Max	S1	S2	S3	S4	S5	
CCl_4	µg/L	<0.5	4.0	<0.5	6.0	<0.5	1.0	13.7	0.8	<0.5	0.5
TCE	µg/L	<0.5	20.8	<0.5	57.4	<0.5	6.2	23	15.5	16	5
Perchlorate	µg/L	<4.0	31.0	<4.0	15	<4.0	15.7	209	17	22	6

Note: MW-17 is a multiport monitoring well containing five separate sampling screens, denoted S1 through S5

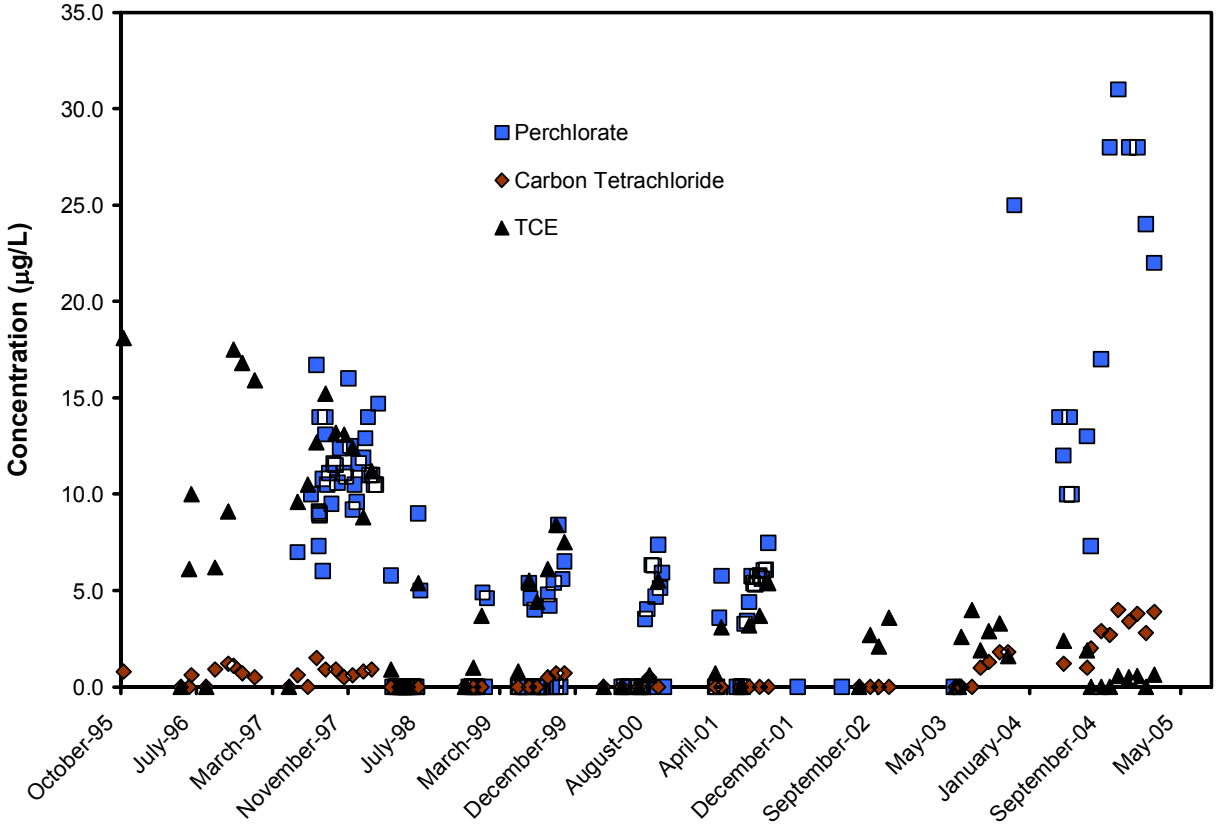

Figure 3. Historical Concentrations of CCl_4, TCE, and Perchlorate in LAWC#3

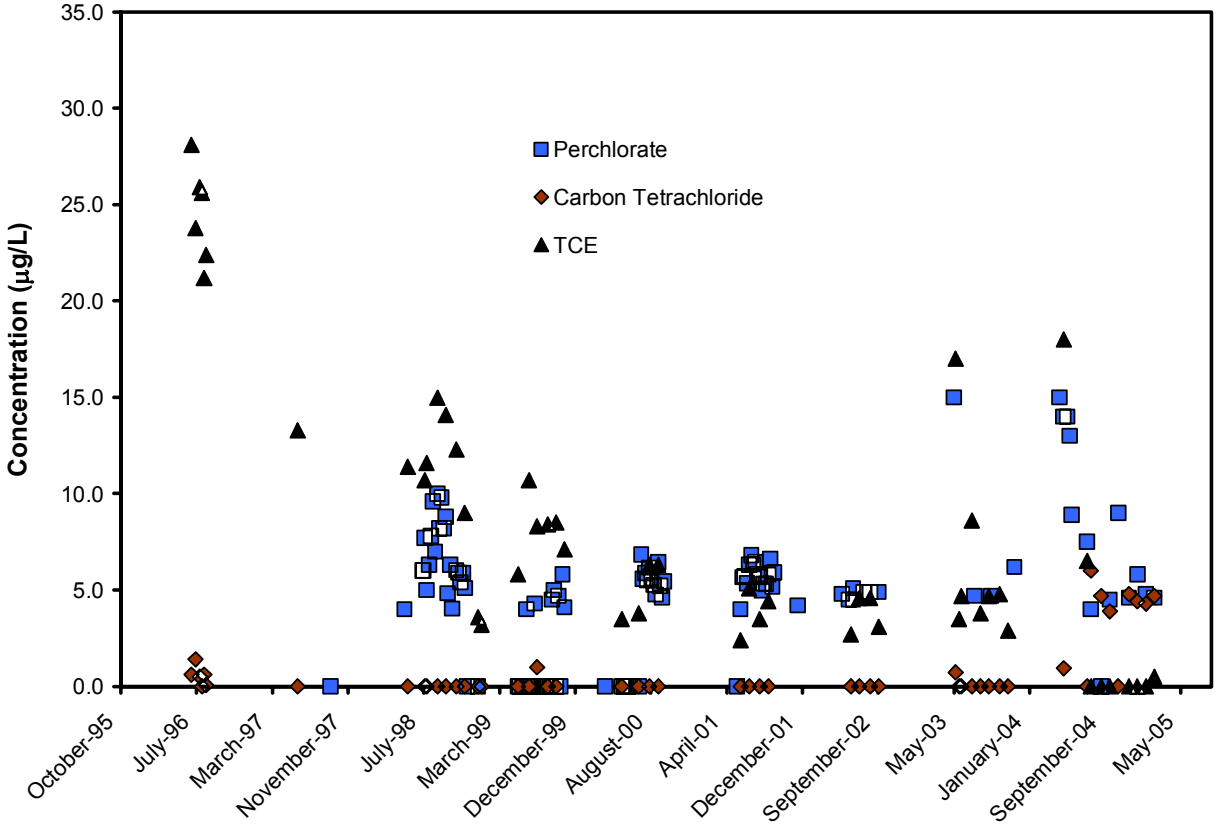

Figure 4. Historical Concentrations of CCl_4, TCE, and Perchlorate in LAWC#5

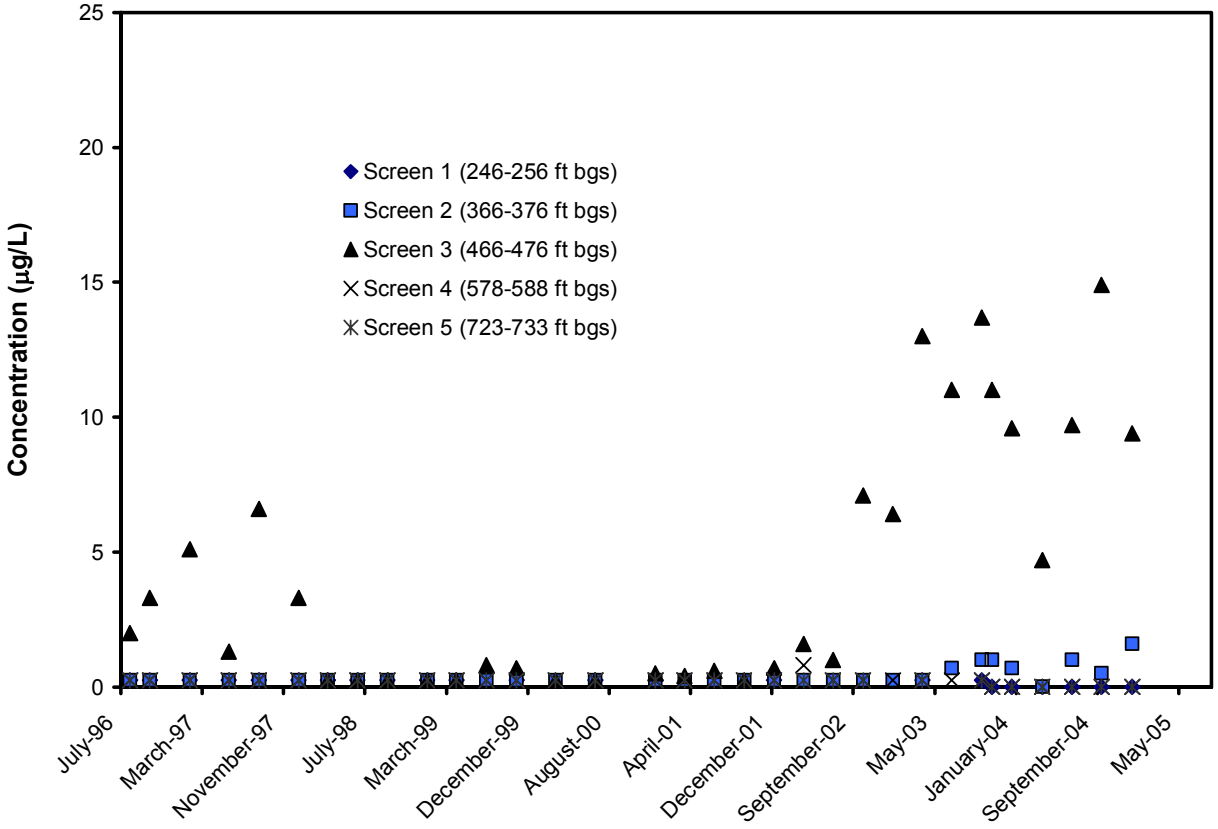

Figure 5. Historical Concentrations of CCl_4 in MW-17

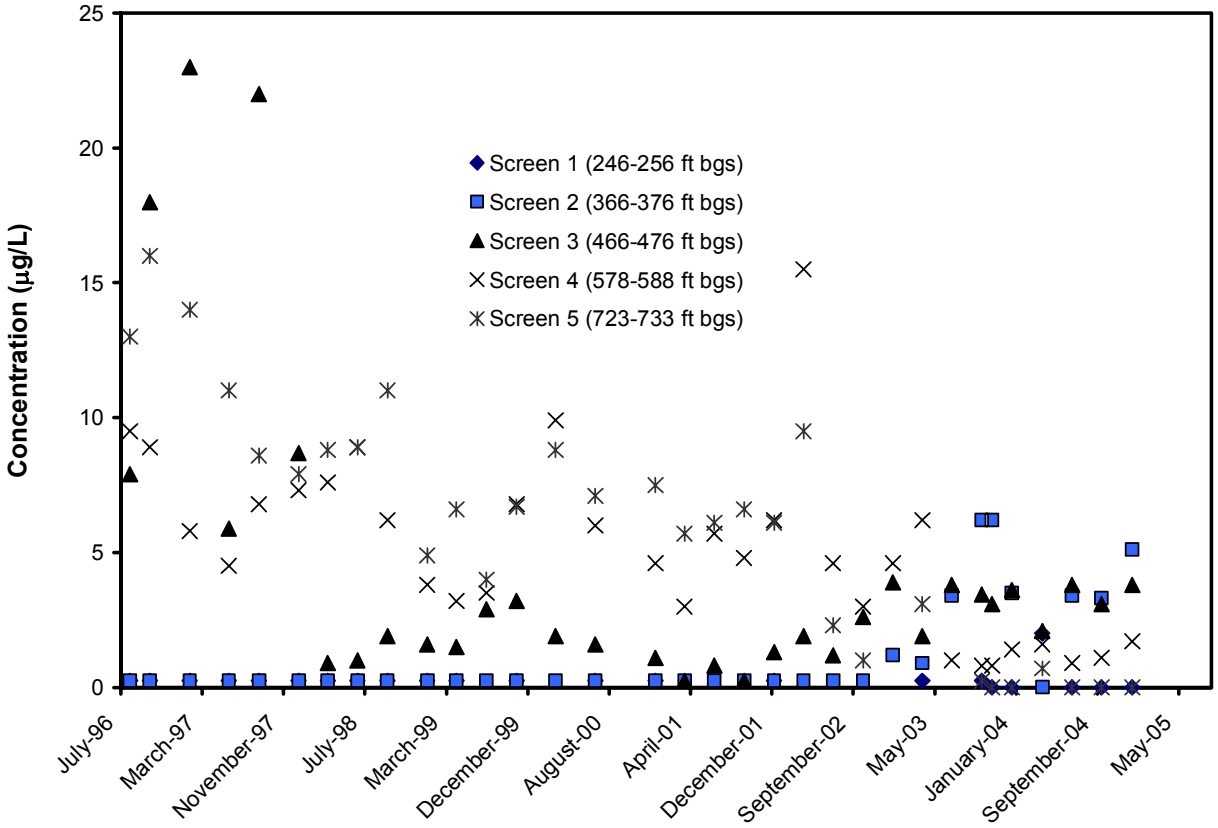

Figure 6. Historical Concentrations of TCE in MW-17

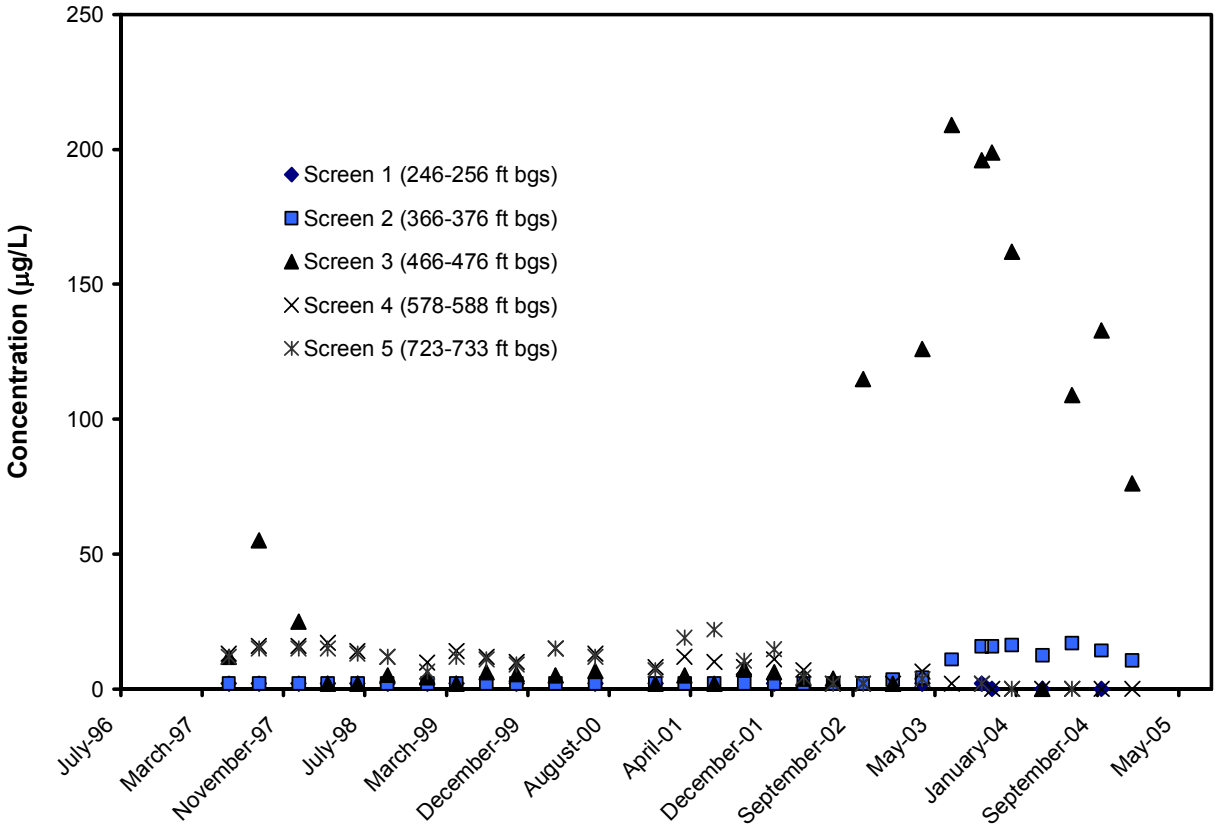

Figure 7. Historical Concentrations of Perchlorate in MW-17

STARTUP SAMPLING

The permit amendment from DHS required more comprehensive analysis of the production wells (LAWC#3 and LAWC#5) and ion exchange vessels during startup. Specific chemicals of interest included n-nitrosodimethylamine (NDMA), 1,4-dioxane, 1,2,3-trichloropropane (1,2,3-TCP), 2,4,6-trinitrotoluene (TNT), royal demolition explosive (RDX), and high-melting explosive (HMX), total coliform, heterotrophic plate count (HPC), VOCs (EPA Method 524.4), and semivolatile organic compounds (SVOCs) (EPA Method 525.2).

Table 3 summarizes the results of startup sampling associated with LAWC#3 and LAWC#5. NDMA, 1,4-dioxane, 1,2,3-TCP, TNT, RDX, and HMX were not detected. As expected, CCl_4, TCE, and PCE were detected in the production wells. Two other VOCs, chloroform and fluorotrumethyl silane (identified as a tentatively identified compound [TIC]), were detected during startup sampling. Total coliform were absent in the startup samples collected from LAWC#3 and LAWC#5. HPC concentrations were below the regulatory level of 500 colony-forming units per milliliter (CFU/mL). Two SVOCs (Benzenesulfonamide, N, 4-dimethyl and Pentadecane) were detected at low concentrations and both were TICs.

Table 4 summarizes the startup sampling associated with the ion exchange vessels. NDMA was not detected in the effluent from the ion exchange vessels. Several VOCs were detected at low concentrations and are believed to be associated with the resin manufacturing.

Table 3. Summary of Production Well Startup Sampling (July 2004)

Analyte	Method	Units	Reporting Limit	LAWC#3	LAWC#5
NDMA	EPA 1625M	µg/L	0.002	<0.002	<0.002
1,4-Dioxane	EPA 8270M	µg/L	0.5	<0.5	<0.5
1,2,3-TCP	524.2M SIM	µg/L	0.005	<0.005	<0.005
TNT	EPA 8330	µg/L	1.5	<1.5	<1.5
RDX	EPA 8330	µg/L	1.5	<1.5	<1.5
HMX	EPA 8330	µg/L	1.5	<1.5	<1.5
Total Coliforms	SM 9223 B	NA	NA	Absent	Absent
HPC	SM 9215 B	CFU/mL	1.0	21.00	18.00
CCl_4	EPA 524.4*	µg/L	0.5	1.00	<0.5
Chloroform	EPA 524.4*	µg/L	0.5	0.68	2.40
Fluorotrumethyl Silane[(a)]	EPA 524.4*	µg/L	0.5	<0.5	8.70
PCE	EPA 524.4*	µg/L	0.5	<0.5	0.56
TCE	EPA 524.4*	µg/L	0.5	1.90	6.50
Benzenesulfonamide, N, 4-dimethyl[(a)]	EPA 525.2*	µg/L	NA	ND	0.37
Pentadecane[(a)]	EPA 525.2*	µg/L	NA	0.31	ND

(a) Tentatively identified compound (TIC)
CFU: colony forming units
ND = Not Dectected
NA = Not Applicable
* only analytes that were detected are listed, all others were below reporting limits.

Table 4. Summary of Ion Exchange Vessel Startup Sampling (July 2004)

Date	Sample Location	VOCs (µg/L)							SVOCs (µg/L)			Total Coliform	NDMA (µg/L)	HPC (CFU/mL)
		4-Heptanone	Benzaldehyde	Bromodichloro-methane	Chloroform	Dibromochloro-methane	Toluene	TCE	1,3-Dioxane, 4-phenyl	Acetophenone	Benzene(1,2-dichloroethyl)			
7/22/04	Lead Effluent	–	–	–	–	–	–	–	–	–	–	A	–	100
	Lag Effluent	2.4	0.1	1.3	3.9	1.2	1.4	1.9	1.7	0.4	0.3	P	<0.002	45
7/24/04	Lag Effluent	–	–	–	–	–	–	–	–	–	–	P	–	170
7/26/04	Lead Effluent	–	–	–	–	–	–	–	–	–	–	A	–	<1.0
	Lag Effluent	–	–	–	–	–	–	–	–	–	–	A	–	<1.0
7/27/04	Lag Effluent	–	–	–	–	–	–	–	–	–	–	A	–	<1.0
7/29/04	Lead Effluent	–	–	–	–	–	–	–	–	–	–	A	–	1100
	Lag Effluent	–	–	–	–	–	–	–	–	–	–	A	–	670

A = absent; P = present

COMPETING IONS

During system design, Rohm and Haas (the resin manufacturer) and USFilter indicated that chromatographic peaking of competing ions, namely nitrate and sulfate, would not be a problem with the PWA2™ resin. Sampling was conducted between July 22 and July 31, 2004 to evaluate breakthrough of the nitrate and sulfate ions. The breakthrough evaluation is presented graphically on Figure 8. The results corresponded relatively well with USFilter testing of the resin in the San Bernardino area: sulfate breakthrough near 2,000 gallons per cubic foot of resin (less than 100 bed volumes) and nitrate breakthrough near 7,000 gallons per cubic foot of resin (less than 300 bed volumes).

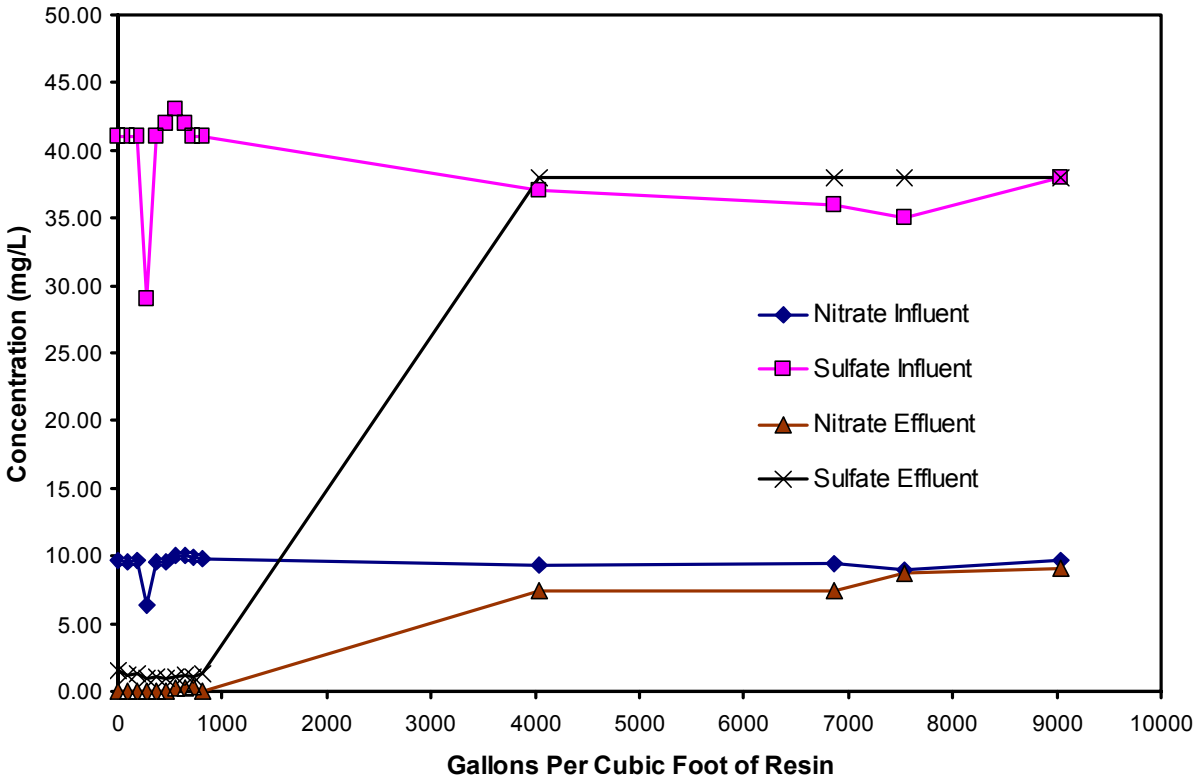

Figure 8. Breakthrough Evaluation for Nitrate and Sulfate

ROUTINE MONITORING

Table 5 summarizes the routine monitoring schedule for the ion exchange and LGAC system. Analytical results from samples collected from LAWC#3 and LAWC#5 are presented in Figures 3 and 4, respectively. Figure 9 shows perchlorate analytical results associated with the ion exchange system and Table 6 provides the nitrate results. Table 7 summarizes the LGAC 4th port analytical results and Table 8 summarizes the LGAC effluent results. The combined effluent samples did not contain detectable CCl_4, TCE, PCE, or perchlorate (see Table 9).

Table 5. Sampling Locations and Monitoring Schedule

Analyte	Method	LAWC#3	LAWC#5	IX Influent	Lead IX Effluent	Lag IX Effluent	LGAC- 4th Port [(a)]	LGAC-Effluent[(a)]	Combined Effluent
CCl_4	EPA 524.2	M	M	-	-	-	W	M	M
TCE	EPA 524.2	M	M	-	-	-	W	M	M
PCE	EPA 524.2	M	M	-	-	-	W	M	M
Perchlorate	EPA 314.0	M	M	W	W	W	-	-	M
Nitrate	EPA 300.0	-	-	M	M	M	-	-	-
Total Coliform	EPA 1604	M	M	-	-	-	-	M	W
Heterotrophic Plate Count	9215B	-	-	-	-	-	-	M	W

(a) Samples collected from each of the 4 LGAC vessels
M = Monthly; W = Weekly
Note: Sampling locations are shown on Figure 1.

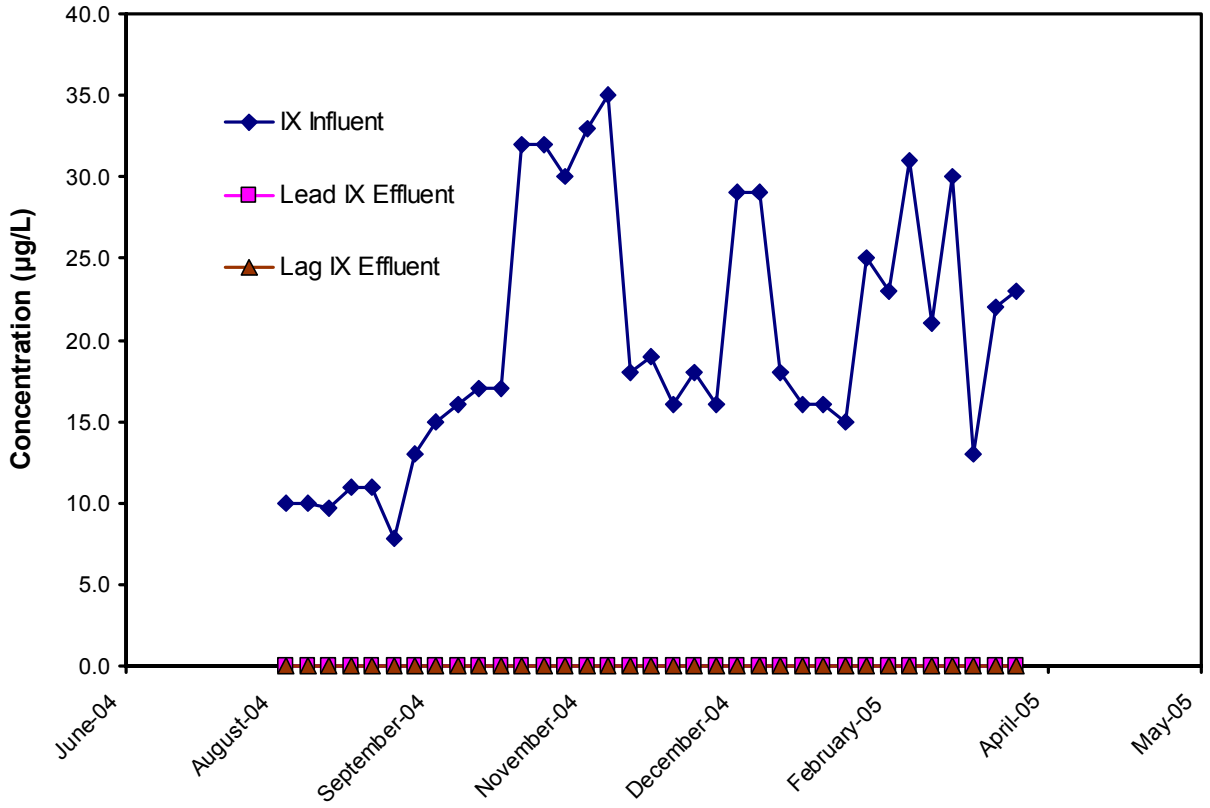

Figure 9. Ion Exchange System Performance

Table 6. Summary of Nitrate Analytical Results (in mg/L)

Date	IX Influent	Lead IX Effluent	Lag IX Effluent
08/03/04	9.8	9.9	9.1
09/07/04	12.0	11.0	11.0
10/05/04	11.0	12.0	12.0
11/02/04	11.0	11.0	11.0
12/07/04	12.0	12.0	11.0
01/04/05	12.0	12.0	11.0
02/01/05	12.0	12.0	12.0
03/01/05	13.0	13.0	12.0

Table 7. LGAC 4th Port Sampling Results (in µg/L)

Date	LGAC Vessel No. 1			LGAC Vessel No. 2			LGAC Vessel No. 3			LGAC Vessel No. 4		
	TCE	CCl_4	PCE	TCE	CCl_4	PCE	TCE	CCl_4	PCE	TCE	CCl_4	PCE
08/03/04	<0.5	<0.5	<0.5	<0.5	<0.5	<0.5	<0.5	<0.5	<0.5	<0.5	<0.5	<0.5
08/10/04	<0.5	<0.5	<0.5	<0.5	<0.5	<0.5	<0.5	<0.5	<0.5	<0.5	<0.5	<0.5
08/17/04	<0.5	<0.5	<0.5	<0.5	<0.5	<0.5	<0.5	<0.5	<0.5	<0.5	<0.5	<0.5
08/24/04	<0.5	<0.5	<0.5	<0.5	<0.5	<0.5	<0.5	<0.5	<0.5	<0.5	<0.5	<0.5
08/31/04	<0.5	<0.5	<0.5	<0.5	<0.5	<0.5	<0.5	<0.5	<0.5	<0.5	<0.5	<0.5
09/07/04	<0.5	<0.5	<0.5	<0.5	<0.5	<0.5	<0.5	<0.5	<0.5	<0.5	<0.5	<0.5
09/14/04	<0.5	<0.5	<0.5	<0.5	<0.5	<0.5	<0.5	<0.5	<0.5	<0.5	<0.5	<0.5
09/21/04	<0.5	<0.5	<0.5	<0.5	<0.5	<0.5	<0.5	<0.5	<0.5	<0.5	<0.5	<0.5
09/28/04	<0.5	<0.5	<0.5	<0.5	<0.5	<0.5	<0.5	<0.5	<0.5	<0.5	<0.5	<0.5
10/05/04	<0.5	<0.5	<0.5	<0.5	<0.5	<0.5	<0.5	<0.5	<0.5	<0.5	<0.5	<0.5
10/12/04	<0.5	<0.5	<0.5	<0.5	<0.5	<0.5	<0.5	<0.5	<0.5	<0.5	<0.5	<0.5
10/19/04	<0.5	<0.5	<0.5	<0.5	<0.5	<0.5	<0.5	<0.5	<0.5	<0.5	<0.5	<0.5
10/26/04	<0.5	<0.5	<0.5	<0.5	<0.5	<0.5	<0.5	<0.5	<0.5	<0.5	<0.5	<0.5
11/02/04	<0.5	<0.5	<0.5	<0.5	<0.5	<0.5	<0.5	<0.5	<0.5	<0.5	<0.5	<0.5
11/09/04	<0.5	<0.5	<0.5	<0.5	**0.51**	<0.5	<0.5	<0.5	<0.5	<0.5	<0.5	<0.5
11/16/04	<0.5	<0.5	<0.5	LGAC Change-Out			<0.5	<0.5	<0.5	<0.5	<0.5	<0.5
11/23/04	<0.5	<0.5	<0.5	LGAC Change-Out			<0.5	<0.5	<0.5	<0.5	<0.5	<0.5
11/30/04	<0.5	<0.5	<0.5	<0.5	<0.5	<0.5	<0.5	<0.5	<0.5	<0.5	<0.5	<0.5
12/07/04	<0.5	**0.59**	<0.5	<0.5	<0.5	<0.5	<0.5	<0.5	<0.5	<0.5	<0.5	<0.5
12/14/04	LGAC Change-Out			<0.5	<0.5	<0.5	<0.5	<0.5	<0.5	<0.5	**0.74**	<0.5
12/21/04	<0.5	<0.5	<0.5	<0.5	<0.5	<0.5	<0.5	<0.5	<0.5	LGAC Change-Out		
12/28/04	<0.5	<0.5	<0.5	<0.5	<0.5	<0.5	<0.5	<0.5	<0.5	LGAC Change-Out		
01/04/05	<0.5	<0.5	<0.5	<0.5	<0.5	<0.5	<0.5	<0.5	<0.5	<0.5	<0.5	<0.5
01/11/05	<0.5	<0.5	<0.5	<0.5	<0.5	<0.5	<0.5	<0.5	<0.5	<0.5	<0.5	<0.5
01/18/05	<0.5	<0.5	<0.5	<0.5	<0.5	<0.5	<0.5	<0.5	<0.5	<0.5	<0.5	<0.5
01/25/05	<0.5	<0.5	<0.5	<0.5	**0.67**	<0.5	<0.5	<0.5	<0.5	<0.5	<0.5	<0.5
02/01/05	<0.5	<0.5	<0.5	LGAC Change-Out			<0.5	<0.5	<0.5	<0.5	<0.5	<0.5
02/08/05	<0.5	<0.5	<0.5	<0.5	<0.5	<0.5	<0.5	<0.5	<0.5	<0.5	<0.5	<0.5
02/15/05	<0.5	<0.5	<0.5	<0.5	<0.5	<0.5	<0.5	<0.5	<0.5	<0.5	<0.5	<0.5
02/22/05	<0.5	<0.5	<0.5	<0.5	<0.5	<0.5	<0.5	<0.5	<0.5	<0.5	<0.5	<0.5
03/01/05	<0.5	<0.5	<0.5	<0.5	<0.5	<0.5	<0.5	<0.5	<0.5	<0.5	<0.5	<0.5
03/08/05	<0.5	<0.5	<0.5	<0.5	<0.5	<0.5	<0.5	<0.5	<0.5	<0.5	<0.5	<0.5
03/15/05	<0.5	<0.5	<0.5	<0.5	<0.5	<0.5	<0.5	**0.7**	<0.5	<0.5	<0.5	<0.5
03/22/05	<0.5	<0.5	<0.5	<0.5	<0.5	<0.5	LGAC Change-Out			<0.5	<0.5	<0.5
03/29/05	<0.5	0.67	<0.5	<0.5	<0.5	<0.5	<0.5	<0.5	<0.5	<0.5	<0.5	<0.5

Table 8. LGAC Effluent Sampling Results

Date	Vessel	TCE (µg/L)	CCl_4 (µg/L)	PCE (µg/L)	Total Coliform	HPC (CFU/mL)	Nitrate (mg/L)
08/03/04	No. 1	<0.5	<0.5	<0.5	A	175	2.4
	No. 2	<0.5	<0.5	<0.5	A	190	2.5
	No. 3	<0.5	<0.5	<0.5	A	19	9.0
	No. 4	<0.5	<0.5	<0.5	A	28	8.9
09/07/04	No. 1	<0.5	<0.5	<0.5	A	140	12
	No. 2	<0.5	<0.5	<0.5	A	<1	12
	No. 3	<0.5	<0.5	<0.5	A	28	12
	No. 4	<0.5	<0.5	<0.5	P	40	12
10/05/04	No. 1	<0.5	<0.5	<0.5	A	<1	12
	No. 2	<0.5	<0.5	<0.5	A	<1	12
	No. 3	<0.5	<0.5	<0.5	A	<1	12
	No. 4	<0.5	<0.5	<0.5	A	<1	12
11/02/04	No. 1	<0.5	<0.5	<0.5	P	3	11
	No. 2	<0.5	<0.5	<0.5	P	7	11
	No. 3	<0.5	<0.5	<0.5	P	5	11
	No. 4	<0.5	<0.5	<0.5	P	15	11
12/07/04	No. 1	<0.5	<0.5	<0.5	A	15	12
	No. 2	<0.5	<0.5	<0.5	A	<1	12
	No. 3	<0.5	<0.5	<0.5	A	<1	12
	No. 4	<0.5	<0.5	<0.5	A	12	12
01/04/05	No. 1	<0.5	<0.5	<0.5	A	15	11
	No. 2	<0.5	<0.5	<0.5	A	27	12
	No. 3	<0.5	<0.5	<0.5	A	<1	12
	No. 4	<0.5	<0.5	<0.5	A	185	12
02/01/05[(a)]	No. 1	<0.5	<0.5	<0.5	A	<1	12
	No. 3	<0.5	<0.5	<0.5	A	<1	12
	No. 4	<0.5	<0.5	<0.5	A	150	12
03/01/05	No. 1	<0.5	<0.5	<0.5	A	23	13
	No. 2	<0.5	<0.5	<0.5	A	28	12
	No. 3	<0.5	<0.5	<0.5	A	<1	13
	No. 4	<0.5	<0.5	<0.5	A	85	13

(a) Vessel No. 2 Offline
A = absent; P = present

Table 9. Combined Effluent Sampling Results

Date	Perchlorate (µg/L)	TCE (µg/L)	CCl_4 (µg/L)	PCE (µg/L)
08/03/04	<4.0	<0.5	<0.5	<0.5
09/07/04	<4.0	<0.5	<0.5	<0.5
10/05/04	<4.0	<0.5	<0.5	<0.5
11/02/04	<4.0	<0.5	<0.5	<0.5
12/07/04	<4.0	<0.5	<0.5	<0.5
01/04/05	<4.0	<0.5	<0.5	<0.5
02/01/05	<4.0	<0.5	<0.5	<0.5
03/01/05	<4.0	<0.5	<0.5	<0.5

COST SUMMARY

Table 10. Construction and Startup Costs: January 2004 Through July 2004

Description	LGAC	IX	Total
Facility Inspections	$6,835.02	$2,417.99	$9,253.01
Sample Analysis	$1,055.00	$6,461.50	$7,516.50
Sample Collection	$1,171.98	$2,375.00	$3,546.98
Maintenance	$11,095.05	$93,670.00	$104,765.05
Carbon Change-Out	$48,391.67	$0.00	$48,391.67
Concrete Pad Construction	$0.00	$124,551.92	$124,551.92
Administrative Costs	$1,662.48	$15,424.12	$17,086.60
Energy Costs	combined	combined	$1,120.05
Chemical Costs	$166.22	$76.22	$242.44
Support Vehicle	combined	combined	$641.58
Total			$317,115.80

Table 11. Operational Costs: August 2004 Through February 2005

Description	GAC	IX	Total
Facility Inspections	$11,685.00	$10,509.38	$22,194.38
Sample Analysis	$21,185.00	$13,228.45	$34,413.45
Sample Collection	$2,819.13	$2,826.25	$5,645.38
Maintenance	$14,589.63	$14,630.00	$29,219.63
Carbon Change-Out	$55,254.90	NA	$55,254.90
IX Treatment Costs	NA	$357,097.61	$357,097.61
Administrative Costs	$1,154.50	$1,477.76	$2,632.26
Energy Costs	combined	combined	$1,367.89
Chemical Costs	combined	combined	$5,598.70
Support Vehicle	combined	combined	$161.02
DHS Fees	$0.00	$20,212.39	$20,212.39
Total			$533,797.61

ATTACHMENTS

Attachments to this technical memorandum include the following:

- Attachment 1: Permit Amendment No. 1910063PA-001
- Attachment 2: Manufacturer Specifications for the Bag Filter

Department of Health Services
Drinking Water Field Operations Branch

PERMIT AMENDMENT 1910063PA-001

LINCOLN AVENUE WATER COMPANY

Los Angeles County

System 1910063

July 26, 2004

STATE OF CALIFORNIA

AMENDMENT TO THE

DOMESTIC WATER SUPPLY PERMIT ISSUED TO
Lincoln Avenue Water Company

ORIGINAL PERMIT: ***04-16-02P-003*** DATE OF ISSUE: ***10/30/2002***

PERMIT AMENDMENT: **1910063*PA-001*** EFFECTIVE DATE: **07/26/*04***

WHEREAS:

I. The ***Lincoln Avenue Water Company*** (hereinafter, the ***LAWC***) submitted an application to the California Department of Health Services dated ***June 18, 2004*** for an amendment to the Domestic Water Supply Permit issued to ***LAWC*** on ***October 30, 2002***.

II. The purpose of the amendment, as stated in the application, is to allow ***LAWC*** to make the following modification to the public water system:

Add an ion exchange treatment system for the removal of perchlorate in groundwater from Wells 3 and 5.

III. ***LAWC*** has submitted all of the supporting information required to evaluate the application.

IV. The California Department of Health Services has evaluated the application and the supporting material and has determined that the proposed modifications comply with all applicable State drinking water requirements as indicated in the attached Engineering Report.

THEREFORE:

I. The California Department of Health Services hereby approves the application submitted by ***LAWC*** for a permit amendment. The Domestic Water Supply Permit issued to ***LAWC*** on ***October 30, 2002*** is hereby amended as follows:

Add an ion exchange treatment system for the removal of perchlorate in groundwater from Wells 3 and 5.

II. This permit amendment is subject to the following conditions:

GENERAL PROVISIONS

1. This document amends and adds to the domestic water supply permit issued to the Lincoln Avenue Water Company (LAWC) by the Department on October 30, 2002. If any provision(s) of this amendment conflicts with the previously issued permits, the provisions of this amendment shall govern. The Operation Manual (OM) for the permit amendment shall be revised to reflect the provisions herein.

2. The Company shall comply with all state laws applicable to public water systems and any regulations, standards, or orders adopted thereunder.

3. The only approved sources of domestic water supply and treatment facilities are listed in Table 1 and 2.

Table 1. Groundwater Source

Source	PS Code	Capacity (gpm)	Status
Well 3	1910063-002	1080	Active
Well 5	1910063-003	1,051	Active

Table 2. Surface Water Sources

Source	PS Code	Capacity (gpm)	Status
Millard Canyon	1910063-012	1134	Active
Foothill MWD Connection	1910063-003	3850	Active

4. The only approved treatment facilities are listed in Table 3.

Table 3. Treatment

Facility	Treatment	Location/Remark
Ion Exchange Plant	IX – Perchlorate removal from Wells 3 & 5	Two vessels in series configuration, located at Olive Sump
GAC Plant	GAC – TCE/PCE/CTC removal From Well 3 & 5	Four vessels in parallel configuration, located at Olive Sump
SW treatment Plant	Alternative filtration technology – treat raw water from Millard Canyon	EPD Plant – two dual-stage high rate filters, located at South Coulter Reservoir site
Chlorination	Gas chlorination at reservoir sites: La Vina, Swigart, Coulter, Ware, Wapello, Glenrose, and Olive Sump	

5. The only other sources approved for emergency interconnections are listed in Table 4.

Table 4. Emergency Interconnections

Connected With	Location	Pipe Size (inches)	Capacity (gpm)	One Way/Two Way
Los Flores WC	Intersection of Montrose and Loma Alta	6	600	Bi-direction flow. Feeds west side of LAWC.
City of Pasadena	At Pasadena Millard Reservoir 3550 Canyon Crest	8	1000	One-Way flow. Feeds east part of the City of Pasadena.
City of Pasadena	Corner of Mountain View and Windsor	6	300	One-way flow. Feeds LAWC.

6. No additions, changes, or modifications to the sources of water supply or water treatment facilities outlined in Provisions 3, 4 and 5 shall be made without prior receipt of an amended domestic water supply permit from this Department.

7. All personnel who operate the Perchlorate Treatment Facility shall be certified in accordance with the California Code of Regulations (CCR), Title 22, Section 63765. The chief operator for the Olive Sump Facility shall hold at least a Grade

T2 certificate. The shift operator shall be at least a grade T1. LAWC is classified as a D4 distribution system.

8. All plant operators and supervisory personnel involved with the operation or oversight of the operations at the Olive Sump and the rest of the LAWC system shall have a copy of and shall be familiar with the conditions of the water supply permit provisions and the provisions of this permit amendment. A copy of the provisions shall be maintained at the LAWC Main Office and at the above-mentioned facility for reference.

9. LAWC shall minimize vandalism and unauthorized entry to the facilities at the Olive Sump at all times.

10. LAWC shall comply with Title 17, CCR, to prevent the water system and treatment facilities from being contaminated by possible cross-connections. LAWC shall maintain a program for the protection of the domestic water system against backflow from premises having dual or unsafe water systems in accordance with Title 17. All backflow prevention devices shall be tested annually.

11. LAWC shall only use NSF certified additives such as gas chlorination or sodium hypochlorite.

WATER QUALITY

12. All water leaving the LAWC Olive Sump facility for domestic purposes shall meet the Maximum Contaminant Levels (MCLs) established by the California Department of Health Services at all times.

13. All water leaving in the ion exchange perchlorate removal equipment shall have perchlorate concentrations below the detection limit.

14. Water leaving the perchlorate removal equipment shall be free of coliform bacteria and have heterotrophic plate counts less than 500 CFU/mL. If coliforms are present or if the HPC is above 500 CFU/ml, LAWC shall identify the source of the bacteria and remove or otherwise correct the problem.

15. Unless otherwise instructed by the Department, LAWC shall have their laboratory performing GC/MS analyses report and address non-target semi-volatile and volatile organic chemicals as outlined on the Department's website:

    http://www.dhs.ca.gov/ps/ddwem/chemicals/unregulated/NT-SVOCs.pdf and

    http://www.dhs.ca.gov/ps/ddwem/chemicals/unregulated/NT-VOCs.pdf.

16. Analysis for low level 1,2,3-trichloropropane (1,2,3-TCP), 1,4-dioxane, and N-nitrosodimethylamine (NDMA) shall be performed as outlined on the Department's website.

17. Based upon the water analysis results from Provisions 35 and 37, or new information developed by NASA-JPL with regard to the Policy 97-005 document, the Department may require additional or more frequent sampling and analysis and changes to the treatment equipment. LAWC may request a modification of any monitoring provision based upon substantiating data at any time. Any changes to the monitoring requirements shall be approved by the Department in writing.

WELL TESTING

18. When Wells 3 and 5 are returned to service:

    a. Sample and analyze for NDMA, 1,4-dioxane, 1,2,3-trichloropropane (using a method suitable to achieve the low level detection of 5 ppt), VOCs using EPA method 524.2, and SVOCs using EPA method 525.2.

    b. Also test for explosive compounds including TNT, HMX and RDX using EPA method 8330.

    c. Sample both wells for total coliforms and HPC.

19. In addition to the table proposed by LAWC in the June 2004 Technical Report, perform the following sampling and analysis:

    a. Check Wells 3 and 5 quarterly for 1,2,3-TCP (low level). If present in Wells 3, 5 or MW 17, then test the production wells monthly, as well as begin testing the GAC vessels for this compound.

    b. Check Wells 5 and 3 and at least annually for SVOCs. If detected, we will add them to the Olive Sump monitoring program.

GENERAL OPERATION AND MAINTENANCE

20. Except as specified in this permit amendment, the perchlorate removal equipment at the Olive Sump Facilities shall be operated in accordance with the Operations Manual for Lincoln Avenue Water Company (revised July 9, 2004) attached to the June 2004 Technical Report and specific vendor supplied manuals for the Olive Sump Facilities and any subsequent approved revisions of these documents.

21. The status of the production wells shall be recorded daily, and the perchlorate removal equipment, granular activated carbon equipment, wet well and controls shall be inspected daily for any abnormal occurrences including but not limited to leaks, unusual noises, or pressure readings. A checklist of items to be examined shall be filled out daily and maintained for a minimum of five (5) years.

22. All water meters, gauges, flow totalizers and analyzers shall be calibrated at least as frequently as recommended by the manufacturer. Records of the calibrations shall be maintained for at least five (5) years.

23. A water treatment operator qualified to operate the perchlorate removal equipment shall be present during each startup of the facility.

24. Sampling ports for the wells and for the perchlorate removal equipment shall be maintained in good operating condition.

25. The LAWC's granular activated carbon treatment equipment for the removal of organic chemicals shall be operated in accordance with current, and comply with the approved Operations and Monitoring (OM) Plan.

PERCHLORATE REMOVAL EQUIPMENT OPERATION

26. The only resin approved for this equipment is virgin Rohm and Haas PWA2. No other resin may be used unless it is approved in writing by this Department.

27. Each vessel shall be loaded with a minimum of 300 cubic feet of the specified resin and at least 24 inches over the top of the septa collectors and a usable bed depth of 32 inches shall be maintained.

28. Each resin vessel shall be operated within the range of 900 to 2400 gpm at all times that the water is to be used for domestic consumption.

29. Prior to sluicing in fresh resin, the vessel lining and internals shall be checked from the manway with a flashlight for signs of chipping, peeling, corrosion or looseness or damage to the vessel internals and the conditions recorded.

30. Prior to placing a fresh resin bed into service, it shall be rinsed for one hour at a flow rate of 140 gallons/ft3.

31. Following rinsing, water from the vessel with the new resin shall be sampled and tested for coliform bacteria and HPC. Pending confirmation of negative coliform results, the water shall not be used for domestic purposes.

32. LAWC shall normally operate the two vessels in series, with the fresher resin in the lag position. During periods of resin change out of the lead bed, LAWC may operate the system with just the lag bed in operation for no more than 48 hours. LAWC should be confirming perchlorate removal while running just one bed.

33. In addition to the daily operations inspection specified in Provision 20 above, LAWC shall record and track the number of days that each resin bed has been in service and the total amount of water processed by each bed in terms of bed volumes, acre-feet or gallons.

34. Based upon the influent perchlorate concentration and the information required in Provision 37, LAWC shall anticipate when perchlorate is expected to break through each lead resin bed, and shall arrange for timely and efficient changeout of the spent resin with the resin supplier.

35. The ion exchange resin shall be replaced in the lead vessel when the lead vessel effluent perchlorate has reached a concentration of 30 percent of the influent perchlorate concentration or 12 ug/L, whichever is lower, but not less than 6 ug/L.

36. If the perchlorate concentration leaving the lag vessel exceeds 4 ug/L, the equipment shall be shut down until the resin in that vessel is replaced.

PERCHLORATE REMOVAL FACILITY MONITORING

37. Prior to placing the ion exchange equipment into initial service:

    a. Flush the vessels for an hour at 750 gpm.

    b. Sample the effluent of both vessels for perchlorate, coliforms and HPC. If the result is absent for perchlorate and coliforms, Sample the lag vessel for NDMA, VOCs, and SVOCs. Have the lab report all TICs and unknowns for all GC/MS analyses. During this initial monitoring period, all treated water shall be discharged to waste. LAWC may place the equipment online and serve the treated water once the initial monitoring results from each vessel shows absence of coliforms and non-detectable perchlorate.

    c. Verify the resin doesn't accumulate sulfate versus nitrate. Sample and analyze the influent and lead vessel effluent twice a day for the first 5 days and transmit the results to the Department.

    d. Ensure that the FHMWD water is utilized to the greatest extent possible.

    Forward the results of items b. and c. to the Department as soon as results are available.

38. Following routine resin replacement, test the effluent for total coliforms and heterotrophic plate count (HPC). Continue directing the water through the GAC vessels and then to waste until the water is absent for coliforms and the HPC is less than 500 CFU/mL.

39. Perform routine monitoring requirements established in Table 2-1 of Permit Amendment Engineering Report. When perchlorate is detected in the effluent of the lead vessel, the testing frequency shall be increased to twice per week, and the laboratory shall be instructed to provide analytical results within one week from the sampling date.

RECORDS AND REPORTING

40. A monthly performance report of the Perchlorate Removal Facility shall be submitted to the Department by the 10th day of the following month. As a minimum, the report shall include:

    a. A summary of analytical results received by LAWC in the reporting calendar month.
    b. A summary of the wells operational schedule, noting problems, scheduled interruptions, and unscheduled interruptions with the facilities.
    c. A table summarizing the status of the resin beds, indicating the number of bed volumes treated, and expected changeover date.

41. Any change in the monitoring and reporting requirements shall be approved, in writing, by the Department.

42. Copies of reports, inspections and all records shall be kept for at least five (5) years. Water quality records shall be kept for ten (10) years.

43. After one year of operation, LAWC shall prepare a report to the Department, which shall discuss compliance with the permit provisions, the treatment plant's status, condition, and performance, and any problems or difficulties. Subsequent reports shall be submitted to the Department by September 1st of the following year.

44. Within 24 hours of receiving notification from the laboratory, LAWC shall notify the Department of any exceedance of an MCL or AL in the finished water leaving the Olive Sump Facilities. If the Department's office is closed, notification shall be made by 8:15 AM on the next day that the Department's office is open. Water from the Olive Sump Facilities shall not be supplied to the distribution system until the exceedance has been corrected or shown to be invalid.

COMPLIANCE SCHEDULE ITEMS

45. By August 10, 2004, LAWC shall prepare inspection checklists and recording forms to comply with Provisions 21. These shall be submitted for review and approval.

46. By August 10, 2004, LAWC shall revise the valve-labeling scheme in the OM Plan in Section 3.2 to be consistent with the field valve labeling and field instructions.

This amendment shall be appended to and shall be considered to be an integral part of the Domestic Water Supply Permit issued to ***LAWC*** on ***October 30, 2002.***

FOR THE CALIFORNIA DEPARTMENT OF HEALTH SERVICES

_____ _____

Date ***Jeff O'Keefe, P.E., District Engineer***
Metropolitan District

ATTACHMENT 2: MANUFACTURER SPECIFICATIONS FOR THE BAG FILTER

MAXILINE™ MBF HE

MAXILINE™ MBF HE

The user friendly, cost effective bag filter housing for high volume, multiple applications and processes.

- The bag filter housing is designed with a proven swing eye-bolt or segment clamp closure mechanism.
- Unique 3-point hold down or bayonet fittings ensure high quality of seal between each filter bag and housing body. Special tool (supplied) ensures simple, effective operation.
- A counter-balanced spring assisted cover-lifter balances the cover perfectly giving it a weightless feel. Opening and closing of the cover with the "little finger" is a reality.
- Positive O-ring sealing offers easy and safe operation.
- Side inlet and bottom outlet provides easy and full drainage, tangential outlet option available to reduce housing height.
- Available in carbon steel or Type 316 stainless steel for high corrosion resistance.
- Housing volume is optimized to minimize product loss.
- 6 standard sizes with 4 through to 24 bag housings available (size 02).

These value added features:	Give these benefits
Low profile design with tangential inlet/outlet	Reduces housing height to make bag changing easier. No need for ladders, stools or catwalks.
Positive, 3-point bag hold downs	Individual, bag sealing for by-pass free filtration.
Spring assisted cover lifter	Quick, easy opening and closing of even the largest size covers.
Eye-bolt cover closure	Rugged, proven design, easy to use.

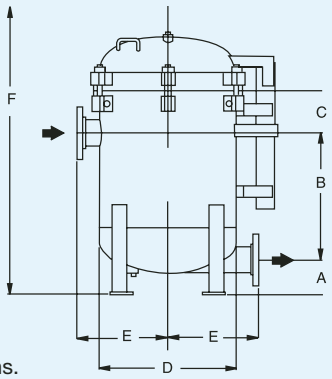

See page 5 for dimensions.

TECHNICAL DATA

SERIES	Type*	No. Of Bags	Bag Size	Max. Flow [2] GPM	Material [1]	Max. Allowable Pressure PSI	Max. Allowable Temperature** °F	Housing Volume GAL	Housing Weight LBS	Inlet Outlet Connection	Type	Vent [4] IN	Dimensions In Inches A	B	C	D	E	F
MAXILINE VMBF SE	VMBF-0402-AB10-040A-UT-11SE	4	2	400	SS	150	250	69	484	4"	Flanged	1"	6.00	20.00	10.50	22.00	15.75	68.00
	VMBF-0602-AB10-060A-UT-11SE	6	2	900	SS	150	250	139	983	6"	Flanged	1"	7.25	20.00	13.00	31.50	20.75	80.00
	VMBF-0802-AB10-080A-UT-11SE	8	2	1750	SS	150	250	141	1023	8"	Flanged	1"	8.25	19.00	12.80	31.50	20.50	80.00
MAXILINE MBF HE	MBF-0302-AB10-030A-UT-11HE	3	2	230	SS or CS	150	250	40	245	3"	Flanged	1"	6.00	22.50	6.40	18.00	12.75	60.00
	MBF-0402-AB10-040A-UT-11HE	4	2	400	SS or CS	150	250	69	380	4"	Flanged	1"	6.00	22.20	7.40	24.00	16.00	68.40
	MBF-0602-AB10-060A-UT-11HE	6	2	900	SS or CS	150	250	90	440	6"	Flanged	1"	7.50	19.50	9.03	24.00	16.50	68.80
	MBF-0802-AB10-080A-UT-11HE	8	2	1750	SS or CS	150	250	116	644	8"	Flanged	1"	8.25	19.00	6.48	30.00	20.50	79.50
MAXILINE MBF HD	MBF-0302-AB10-030A-UT-11HD	3	2	230	SS or CS	150	250	40	255	3"	Flanged	1"	6.00	22.50	6.40	18.00	12.75	66.00
	MBF-0402-AB10-040A-UT-11HD	4	2	400	SS or CS	150	250	54	390	4"	Flanged	1"	6.00	22.20	7.80	24.00	16.00	68.00
	MBF-0602-AB10-060A-UT-11HD	6	2	900	SS or CS	150	250	95	460	6"	Flanged	1"	7.00	20.00	9.80	26.00	18.50	68.00
	MBF-0802-AB10-080A-UT-11HD	8	2	1750	SS or CS	150	250	140	655	8"	Flanged	1"	8.25	19.00	10.78	30.00	20.50	66.00
	MBF-1002-AB10-100A-UT-11HD	10	2	2600	SS or CS	150	250	215	1400	10"	Flanged	1"	10.00	17.00	13.30	36.00	24.50	70.00
	MBF-1202-AB10-100A-UT-11HD	12	2	2600	SS or CS	150	250	245	1500	10"	Flanged	1"	10.00	17.00	13.80	38.00	24.50	72.00
	MBF-1402-AB10-100A-UT-11HD	14	2	2600	SS or CS	150	250	311	1800	10"	Flanged	1"	11.50	20.00	11.81	42.00	28.00	76.00
	MBF-1602-AB10-120A-UT-11HD	16	2	3500	SS or CS	150	250	317	1875	12"	Flanged	1"	11.50	20.00	11.81	42.00	28.00	76.00
	MBF-1802-AB10-120A-UT-11HD	18	2	3500	SS or CS	150	250	446	2420	12"	Flanged	1"	12.50	22.00	10.69	48.00	31.00	88.00
	MBF-2002-AB10-140A-UT-11HD	20	2	4500	SS or CS	150	250	454	2505	14"	Flanged	1"	12.50	22.00	10.69	48.00	31.00	88.00
	MBF-2202-AB10-140A-UT-11HD	22	2	4500	SS or CS	150	250	570	2730	14"	Flanged	1"	12.50	22.00	13.44	52.00	33.00	92.00
	MBF-2402-AB10-140A-UT-11HD	24	2	4500	SS or CS	150	250	570	2800	14"	Flanged	1"	12.50	22.00	13.44	52.00	33.00	92.00
TOPLINE	TBF-0101-AB10-020A	1	1	90	SS or CS	150	400	3.5	80	2"	Flanged	1/4"	17.70	15.50	1.93	8.62	12.08	53.50
	TBF-0102-AB10-020A	1	2	180	SS or CS	150	400	7.25	93	2"	Flanged	1/4"	17.70	31.00	1.93	8.62	12.08	84.25
	TBF-0102-AB10-020R-M32B0	1	2	180	SS	150	400	7.25	93	2"	Tri-Clamp	1/4"	15.80	32.78	1.93	8.62	12.83	84.25
SIDELINE	SBF-0101-AB10-020A	1	1	90	SS	150	400	4.75	84	2"	Flanged	1/4"	17.70	19.50	3.15	8.62	8.66	54.70
	SBF-0101-AB10-030A	1	1	90	SS	150	400	4.75	84	3"	Flanged	1/4"	17.70	19.50	3.15	8.62	8.66	54.70
	SBF-0102-AB10-020A	1	2	180	SS	150	400	8.5	102	2"	Flanged	1/4"	17.70	35.00	3.15	8.62	8.66	85.50
	SBF-0102-AB10-030A	1	2	180	SS	150	400	8.5	102	3"	Flanged	1/4"	17.70	35.00	3.15	8.62	8.66	85.50
	SBF-0103-AB21-015N	1	3	25	SS	300	225	0.5	26	1 1/2"	NPT	1/4"	na	11.77	2.95	4.50	3.50	21.80
	SBF-0104-AB21-015N	1	4	50	SS	300	225	0.7	29	1 1/2"	NPT	1/4"	na	17.87	2.95	4.50	3.50	33.90
DUOLINE	TOPLINE	2	2	180	SS or CS	150	250	16	240	2"	Flanged	1/4"	17.70	24.50	1.93	8.62	37.45	84.25
	SIDELINE	2	2	180	SS	150	250	16	300	2"	Flanged	1/4"	17.70	27.50	3.15	8.62	30.82	85.50
	SIDELINE	2	2	180	SS	150	250	17	330	3"	Flanged	1/4"	17.70	27.50	3.15	8.62	33.32	85.50
	FLOWLINE	2	2	180	SS or CS	150	250	15	200	2"	Flanged	1/4"	17.70	28.44	3.34	7.68	37.45	85.50
MODULINE	TOPLINE	1+1	2	360	SS or CS	150	250	16	230	2"	Flanged	1/4"	17.70	24.50	1.93	8.62	34.32	84.25
	SIDELINE	1+1	2	360	SS	150	250	16	230	2"	Flanged	1/4"	17.70	27.50	3.15	8.62	27.44	85.50
	SIDLINE	1+1	2	360	SS	150	250	17	300	3"	Flanged	1/4"	17.70	27.00	3.15	8.62	29.70	85.50
	FLOWLINE	1+1	2	360	SS or CS	150	250	15	170	2"	Flanged	1/4"	17.70	28.44	3.34	7.68	26.64	85.50
POLYLINE	PBF-0101-PV/CP10-020A/N/S	1	1	50	PVC/CPVC	150	70	3.6	50	2"	Flg/Skt/NPT	1/4"	7.87	13.75	9.20	6.13	10.90	32.63
	PBF-0102-PV/CP10-020A/N/S	1	2	100	PVC/CPVC	150	70	6.5	75	2"	Flg/Skt/NPT	1/4"	7.87	29.75	9.20	6.13	10.90	74.63
	PBF-0101-PO10-020A	1	1	50	PPL	150	70	6.6	55	2"	Flanged	1/4"	3.26	20.75	3.38	10.35	8.50	60.00
	PBF-0101-PO10-020N	1	1	50	PPL	150	70	6.6	51	2"	NPT	1/4"	3.26	20.75	3.38	10.35	6.14	60.00
	PBF-0102-PO10-020A	1	2	100	PPL	150	70	9.5	68	2"	Flanged	1/4"	3.26	36.75	3.38	10.35	8.50	76.00
	PBF-0102-PO10-020N	1	2	100	PPL	150	70	9.5	64	2"	NPT	1/4"	3.26	36.75	3.38	10.35	6.14	76.00
	PBF-0102-PF07-020A	1	2	100	PVDF	100	80	9.5	100	2"	Flanged	1/4"	3.26	36.00	3.88	10.35	8.50	75.25
FLOWLINE	FBF-0101-AB10-020A	1	1	90	SS or CS	150	250	4	30	2"	Flanged	1/4"	17.70	20.75	3.34	7.68	6.70	54.90
	FBF-0101-AB10-020N	1	1	90	SS or CS	150	250	4	30	2"	NPT	1/4"	17.70	19.64	3.34	7.68	5.37	54.90
	FBF-0102-AB10-020A	1	2	180	SS or CS	150	250	7	43	2	Flanged	1/4"	17.70	36.31	3.34	7.68	6.70	85.70
	FBF-0102-AB10-020N	1	2	180	SS or CS	150	250	7	43	2"	NPT	1/4"	17.70	35.19	3.34	7.68	5.37	85.70
ECOLINE	EBF-0101-AB10-020N	1	1	90	SS	100	250	4	25	2"	NPT	1/4"	na	19.64	3.24	7.68	5.37	37.00
	EBF-0102-AB10-020N	1	2	180	SS	100	250	7	38	2"	NPT	1/4"	na	35.19	3.24	7.68	5.37	68.00
	EBF-0103-AB10-015N	1	3	25	SS	150	250	0.5	9	1 1/2"	NPT	1/4"	na	11.77	2.78	4.50	3.50	22.45
	EBF-0104-AB10-015N	1	4	50	SS	150	250	0.7	11	1 1/2"	NPT	1/4"	na	17.87	2.78	4.50	3.50	33.84

* Type number is for stainless steel construction. Change AB to CS for carbon steel. ** Depending on seal material

1) SS = Austenitic Stainless Steel SS 316 and CF8M or better

2) Maximum theoretical flow based on water viscosity, bag specific

3) Dimensions for reference only and approximate. Exact dimensions for installation purposes available on request.

4) For details, see available product specific data sheet

Product Codes

D –	MBF –	04	02 –	AC	10 –	050	D
D-DUOLINE M-MODULINE	VMBF-MAXILINE MBF-MAXILINE TBF-TOPLINE SBF-SIDELINE PBF-POLYLINE FBF-FLOWLINE EBF-ECOLINE	No. of bags 01, 02, 04, 08, 12, 16, 20, 24	Bag Size 01-short 7" 02-short 7" 03-short 4" 04-short 4"	Material AB-SS316 CP-CPVC CS-Carbon Steel PO-Polypropylene PF-PVDF PV-PVC	Pressure rating 07-100 psi 10-150 psi 21-300 psi	Connection Size 050-1/2" 010-1" 012-1 1/4" 015-1 1/2" 020-2" Up to 140-14"	Connection Type A-ANSI Flange N-NPT Female Thread R-Tri-Clamp S-Socket

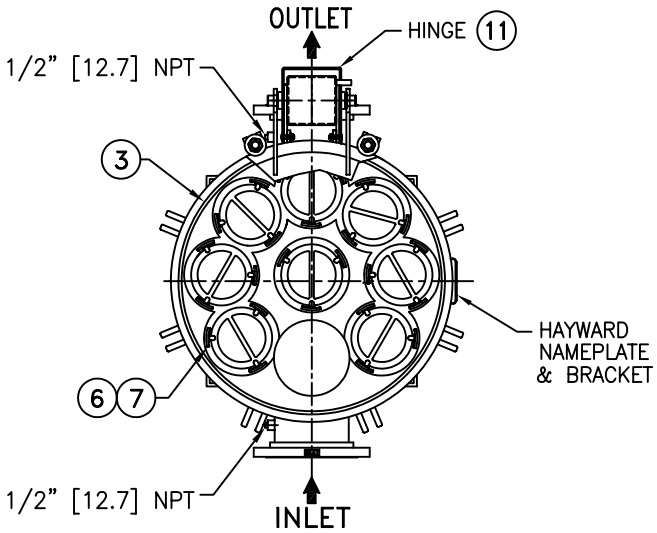

SECTION A–A

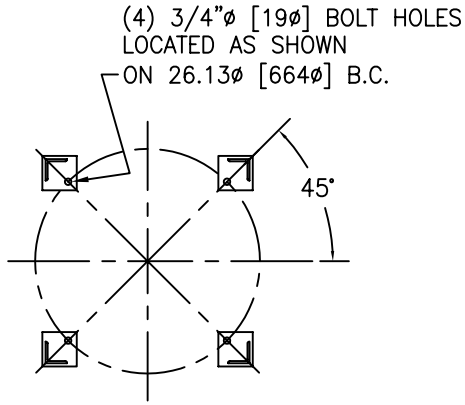

SECTION B–B

ITEM	PART NAME	MATERIAL
1	BODY	SA516 GR. 70
2	COVER	SA516 GR. 70
3	O–RING	BUNA–N
4	PIN	SA193 B7 ZINC PL
5	SNAP RING	STEEL ZINC PL
6	BASKET RESTRAINER	316 SS
7	FILTER BAG RETAINER	316 SS
8	EYE BOLT	SA193 B7 ZINC PL
9	HEX NUT	SA194 2H ZINC PL
10	WASHER	STEEL ZINC PL
11	SPRING ASSISTED MECHANISM	STAINLESS STEEL

NOTES:

1. UNITS ARE TO BE DESIGNED, FABRICATED & "U" STAMPED IN ACCORDANCE WITH ASME SECT. VIII,DIV. 1 BOILER & PRESSURE VESSEL CODE, IN COMPLIANCE TO LATEST ADDENDA.
2. INLET / OUTLET FLANGE CONNECTIONS PER ANSI B 16.5.
3. DESIGN PRESSURE: 150 PSI (MAWP)
   DESIGN TEMPERATURE 250° F.
   MDMT – –20° F @ 150 PSI.
4. ALL DIMENSIONS ARE IN INCHES / (MM).
5. ALL BOLT HOLES ARE TO STRADDLE NATURAL CENTERLINES.
6. APPROX. WEIGHT (DRY) 970 LB. (439 KG.)
7. APPROX. SHIPPING WEIGHT 1100 LB. (498 kgs.)
8. PAINT C/STL. PER HAYWARD STANDARD ES–301.

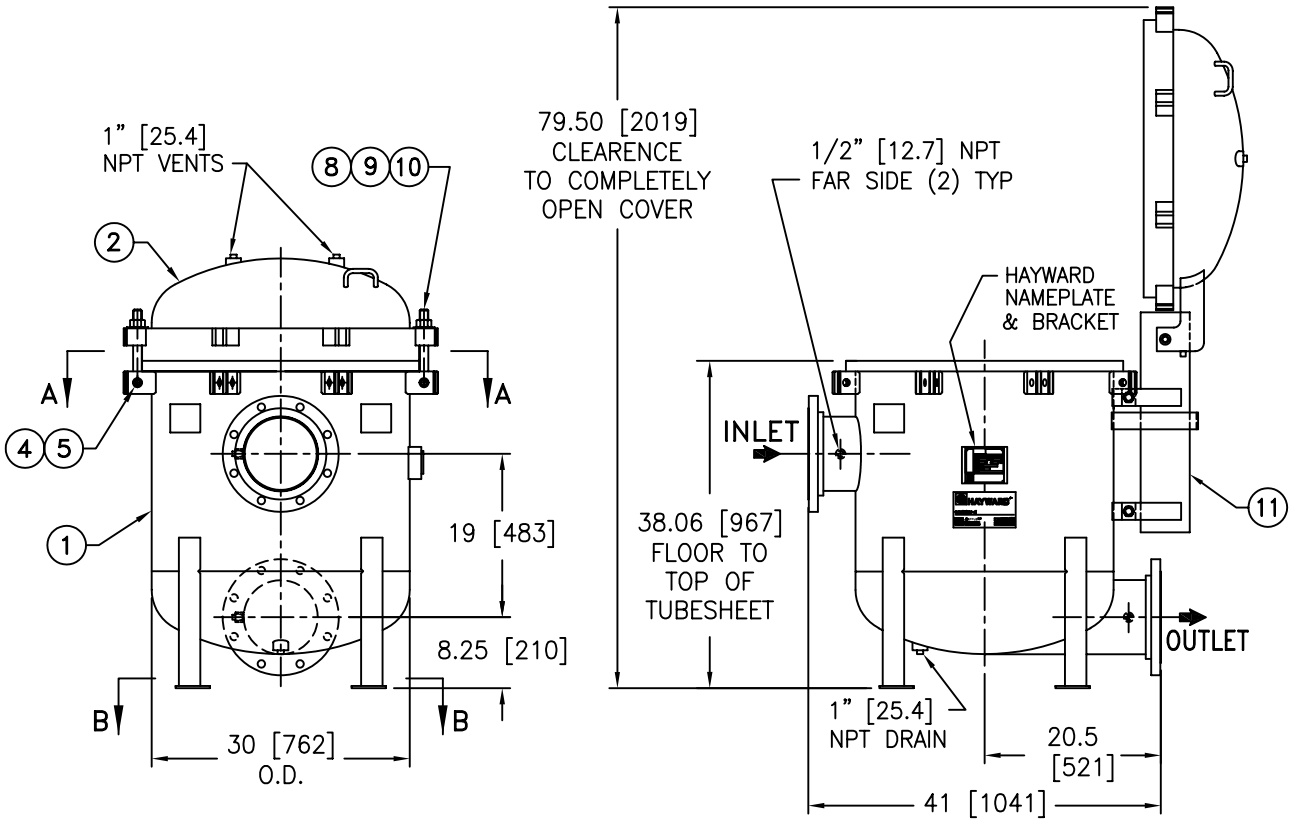

CERTIFIED FOR:
P.O. NO.:
REG. NO.:
QUOTE NO.:
TAG NO.:
VESSEL CODE: MBF–0802–CS10–080A–UT–13HE
HAYWARD PART NO.: F3AV0800002

HAYWARD INDUSTRIAL PRODUCTS, INC.
Manufactures of LOEFFLER FILTRATION & GAF® FILTER SYSTEMS
900 FAIRMOUNT AVENUE, ELIZABETH, NEW JERSEY 07207

NAME **MAXILINE MBF0802HE FILTER VESSEL 8" 150# RF INLET / TANGENTIAL OUTLET CARBON STEEL**

DRAWN	SD	DATE	9/5/00	CERT.	LF	DATE	9/15/00

SIZE	DWG NO	REV
A	HE0808TC	F

UNAUTHORIZED USE, MANUFACTURE OR REPRODUCTION IN WHOLE OR IN PART IS PROHIBITED. DRAWING, DESIGN AND OTHER DISCLOSURES PROPERTY OF HAYWARD INDUSTRIAL PRODUCTS, INC.

GAF and the GAF logo are registered trademarks of GAF Corporation in the United Stated, and are used under license.

ELECTRONIC FILE NAME: HE0808TC.DWG
REF. ECR C054 DATE 02/02/04

DURAGAF™

Extended Life Filter Bags Can Improve Your Filtration Process and Save You Money

DURAGAF™ for High Performance

Extended Life Filter Bags Designed to Save You Money DURAGAF filter bags represent the state-of-the-art in needled felt bag filter media. Their unique structure delivers equal filtration performance with lifetimes 2-5 times longer than ordinary felt media. The result is reduced operating costs due lower bag consumption, downtime, change-out labor, storage and disposal.

Why DURAGAF™ Filter Bags Last Longer

DURAGAF filter bags are available in two extended life materials: polypropylene (code POXL) or polyester (code PEXL). These two materials utilize a fiber blend with a finer fiber diameter and a higher weight than ordinary media. The result is a dramatically higher dirt holding capacity at the same efficiency and differential pressure. Processes run longer and need fewer bag changes with DURAGAF filter bags.

All-Welded Construction for Superior Performance

All DURAGAF filter bags feature 100% welded fabrication and the HAYWARD SENTINEL seal. This construction eliminates the bypass which can occur in standard sewn filter bags. HAYWARD proprietary welding technology produces a super-strong seam that will stand up to even the most demanding applications without failure.

DURAGAF™ Filter Bags Seal Better in Critical Applications

The patented SENTINEL seal is standard on all DURAGAF filter bags. The unique, pressure-actuated ring actually improves its seal as differential pressure increases.

No Downstream Fiber Contamination

All DURAGAF filter bags are manufactured with a proprietary downstream surface treatment to prevent fiber migration. A special finish is obtained by glazing the surface, melting fibers together to form a tight, secure downstream matrix. In addition, the weld seams are heat bonded to eliminate loose fibers which might result during fabrication.

Food and Beverage Applications

DURAGAF filter bags are available in models (POXLF, PEXLF) which are compliant with FDA and EC requirements for food contact.

NOMINAL

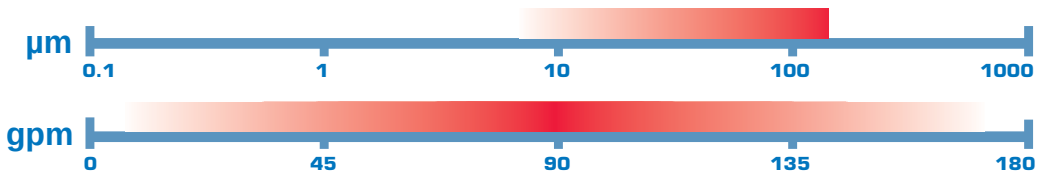

How much longer will a DURAGAF™ Filter Bag last in your application?

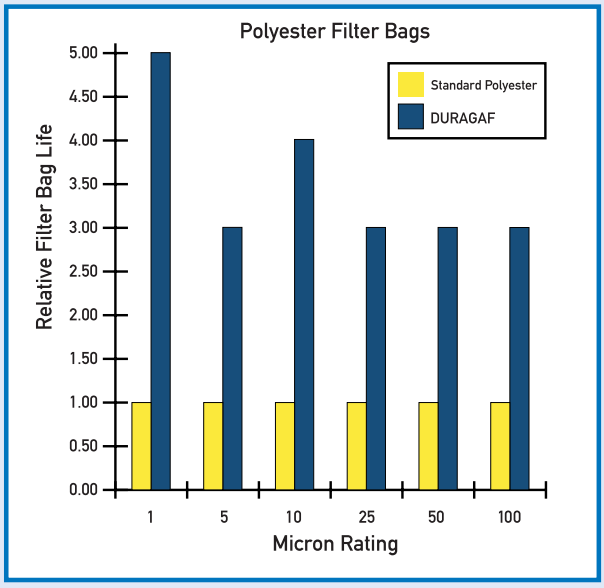

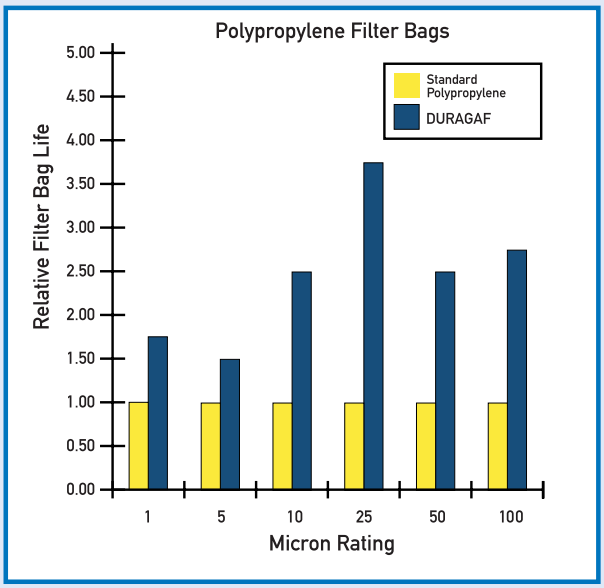

Extended Life Felt
finer fibers
more pores
thicker media

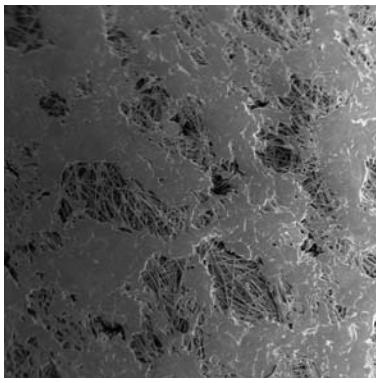

Surface of Extended Life Felt
no fiber release
full flow through surface channels

PRODUCT CODES

DURAGAF™
POXL: Polypropylene
PEXL: Polyester
POXLF: Polypropylene Food Grade
PEXLF: Polyester Food Grade

P: Plain

E: Polypropylene SENTINEL Ring, Welded (POXL)/(POXLF)
H: Hytrel SENTINEL Ring, Welded (PEXL)
Z-WW: Santoprene SENTINEL Ring, Welded (PEXLF)

POXL	-	50	-	P	01	E	-	30L
Bag Material		Micron Rating µm		Bag Cover Layer	Bag Size	Collar/Ring Type		Packaging

POXL/PEXL		PEXLF	POXLF
1	5	1	5
10	25	5	10
50	100	10	

Code	Size
01	ø 7 x 17 inches
02	ø 7 x 32 inches

Bags/Box Box Size (mm)
L: Large