3E: STRONTIUM ISOTOPE ANALYSIS

Analysis of Sr in Water

Massachusetts Institute of Technology
Dept. of Earth, Atmospheric and Planetary Sciences Laboratory
Contact: Dr. Francis Ö. Dudás at 617-253-7993, email: fdudas@mit.edu

For Sr isotopic composition determinations, 15 – 50 mL of water are sufficient. If Sr content is to be determined, spike (^{84}Sr) is added. The water is evaporated with 1 mL conc. HNO_3; the dry residue is taken up in 1 mL conc. HNO_3 and dried again. The sample is refluxed on a hot plate overnight with 2 mL conc. HNO_3, then centrifuged. In exceptional cases, excess remaining organic matter is removed by reaction with 100 µL aliquots of H_2O_2. The supernatant is transferred to a clean beaker and again dried. This sample can then be taken up in HNO_3 for further processing.

Sr Separation

Sr is separated from other cations using 50 µL columns filled with Eichrome Sr-Spec resin. The sample is dissolved in 500 µL 3.5 N HNO_3, centrifuged, and loaded onto the column. Next, the column is rinsed with 1200 µL 3.5 N HNO_3. Sr is then eluted with 800 µL H_2O. A drop of 0.1 M H_3PO_4 is added and the sample dried down. For carbonate-rich samples, this procedure is repeated twice to improve separation of Sr from Ca, which interferes with mass spectrometry. The total procedural blank is ≤ 100 pg Sr with typical sample sizes of >150 ng Sr.

Mass Spectrometry

All analyses are completed on a GV IsoProbeT multicollector mass spectrometer. Sr is loaded on Re filaments in a solution of $TaCl_5$ and H_3PO_4, and is analyzed by dynamic multicollection. No fewer than 70 ratios are measured with the target intensity of ^{88}Sr = 3 V, providing a standard error for the mean of exponentially corrected $^{87}Sr/^{86}Sr$ of ≤0.001%. Data are corrected for ^{87}Rb interference based on measured ^{85}Rb abundance, fractionation corrected to $^{86}Sr/^{88}Sr$ = 0.1194, and reported with respect to a value of 0.710250 for NBS-987. The running mean of analyses of NBS-987 is 0.710240 ± 0.000015, and no bias correction is made to the analytical data.

3F: INORGANIC CHLORIDE ISOTOPE ANALYSIS

A. **AgCl precipitation for δ^{37}Cl measurement** *(modified from Eggenkamp, 1994)*

Materials

1. 1M KNO_3
2. Na_2HPO_4-Citric acid buffer solution (0.71g $Na_2HPO_4 \cdot 2H_2O$, 20.6g Citric acid to 1L DI-H_2O)
3. 0.4 M $AgNO_3$
4. Dilute HNO_3 (1mL conc. HNO_3 to 500 mL DI-H_2O; or 5mL 1M HNO_3 to 500 mL DI-H_2O).
5. 50 mL centrifuge tubes

Day 1: Sample selection and pretreatment (for water samples)

- Seawater collected from Conception Bay, Newfoundland (CBN) is the in-house Cl isotope reference material. At least two 0.1 mL to 0.2 mL CBN samples should be included in each batch.

1. Weigh out sample aliquot in a beaker
   - Volume of sample to use depends on the chloride concentration of the sample. 3000/ppm Cl^- (sample) gives the number of mL of sample to precipitate 12 mg AgCl (≈3mgCl≈85umol≈CH_3Cl). For sample volumes less than 10 mL, no pretreatment is necessary, but for dilute samples requiring more than 10mL, samples need to be reduced by evaporation to 10mL. Optimal sample size is 3-10mg Cl^-.
2. Add:
   - 4 mL of the KNO_3 solution to adjust ionic strength and
   - 2 mL of the citric acid buffer solution to adjust pH
3. Gently heat sample on a hotplate to **80°C**.
4. Remove sample from hotplate. Add 3 mL ~0.4 M $AgNO_3$ and cover with a watch glass. DO NOT STIR. Allow samples to ripen overnight or for several hours in the dark.
   - $AgNO_3$ and AgCl must be protected from the light!

Day 2: Precipitate recovery, centrifuge method

1. Transfer the sample plus liquid into a labeled 50 mL centrifuge tube, washing the beaker at least three times into the tube with small amounts of dilute HNO_3
2. Centrifuge at 4000 rpm for at least 4 minutes. Repeat if precipitate is not packed to the bottom. Carefully remove supernatant with a plastic disposable pipette. BE CAREFUL NOT TO DISTURB THE PRECIPITATE.
3. Add 40 mL dilute HNO_3, cap the tube, shake to wash, and centrifuge as above.
4. Repeat with a 20 mL wash, a 15 mL wash, and a 10 mL wash.
5. Place tube in the oven or the tube dryer to dry.
   - AgCl must be protected from the light—store tubes in the dark until the methyl iodide reaction step.

Eggenkamp, H., 1994. *The geochemistry of the chlorine isotopes*. Ph.D. Thesis, University of Utrecht, 150 pp.

B. Conversion of AgCl to CH_3Cl and isotope ratio mass spectrometry of CH_3Cl

(after Shouakar-Stash et al., 2005)

The dried AgCl precipitate is weighed (0.2 to 1.0 mg) and placed in a 20-mL amber crimp-seal vial. Excess CH_3I (100 microliters) is added to the vial under a He atmosphere in a glove box, the vial is crimp-sealed under He, and then placed in an oven at 80°C for 48 hours to convert AgCl to CH_3Cl. Following this reaction, vials are loaded onto a CombiPal autosampler. Gas is transferred from the crimp-seal vials to a gas chromatograph in a He carrier stream. Continuous-flow isotope ratio mass spectrometry is used to measure Cl isotope ratios of CH_3Cl following its separation from residual CH_3I by gas chromatography. All samples are analyzed in duplicate or triplicate. Precision of the method is better than ±0.1 ‰ for δ^{37}Cl.

Shouakar-Stash, O., Drimmie, R.J., and Frape, S.K., 2005. *Rapid Comm. Mass Spec.* 19, 121.

3G: CFC ANALYSIS

The Reston Chlorofluorocarbon Laboratory

Analytical Procedures

CFCs are determined in the laboratory using a purge-and-trap gas chromatography procedure with an ECD detector. This section describes details of the measurements, including preservation of samples, determination of the gas volume in the headspace of the ampoule, the apparatus for measuring CFC-12, CFC-11 and CFC-113 concentrations, the procedure for introducing the water into the stripping cell, the measurement procedure, blanks, standardization and calibration procedures, and instrument stability.

Preservation of Samples

Prior to the development of storage procedures by Busenberg and Plummer [1992], storage of water samples without contamination of halocarbons was difficult. Samples can be affected in four ways during storage including sorption to the container surface, reaction with the container surface (including microbial degradation), contamination by the container, and contamination by grease or oil present on the container surface.

Uptake of halocarbons by the container materials can alter CFC concentrations during storage. *Reynolds et al. [1990]* investigated ten materials, including 316 stainless steel. Significant uptake of halocarbons occurs in aluminum (1-6 hours), stainless steel (1-2 weeks), copper (1-6 hours), galvanized steel (<1 hour), and Nylon (5 minutes). No uptake of halocarbons was evident after 5 weeks in borosilicate glass *[Reynolds et al., 1990]*. *Reynolds et al. [1990]* found that the CFC-12 and CFC-11 concentrations of natural waters in welded borosilicate-glass ampoules remained unchanged even after 1 year of storage. The USGS CFC laboratory uses borosilicate-glass ampoules for sample collection.

Storage of waters with trace concentrations of CFCs can result in the contamination of the sample with CFCs if latex rubber, synthetic rubber, silicon rubber, plastics, Teflon, polymers, or grease and oil are in contact with the sample [Busenberg and Plummer, 1992; Reynolds et al., 1990]. For example, significant amounts of CFCs are dissolved in polymers that can seriously contaminate the samples *[Reynolds et al., 1990; Bullister, 1984]*. In addition, CFCs can diffuse from the air through the polymers into the sample *[Bullister, 1984]*.

Sample Ampoule Headspace

The CFC content of the aquifer sample is partitioned between the water and the gas in the neck of the ampoule. Our analytical procedure determines the CFC content of the water in the ampoule. A correction is applied to account for the CFC content of gas in the headspace of the ampoule. The volume of the headspace in the neck of the ampoule is calculated from the weight of water required to fill the void space. The headspace is independently evaluated for every ampoule after the CFC analysis. The headspace volume is about 2 percent of the liquid volume for the nominal 50-mL Wheaton ampoules, which actually hold 62 mL of water. The concentrations of CFC-11, CFC-12, and CFC-113 in the aquifer are calculated from the concentrations in the water sample, the water temperature, and the volumes of water and headspace in the ampoules *[see for example, Pankow, 1986; 1990]*.

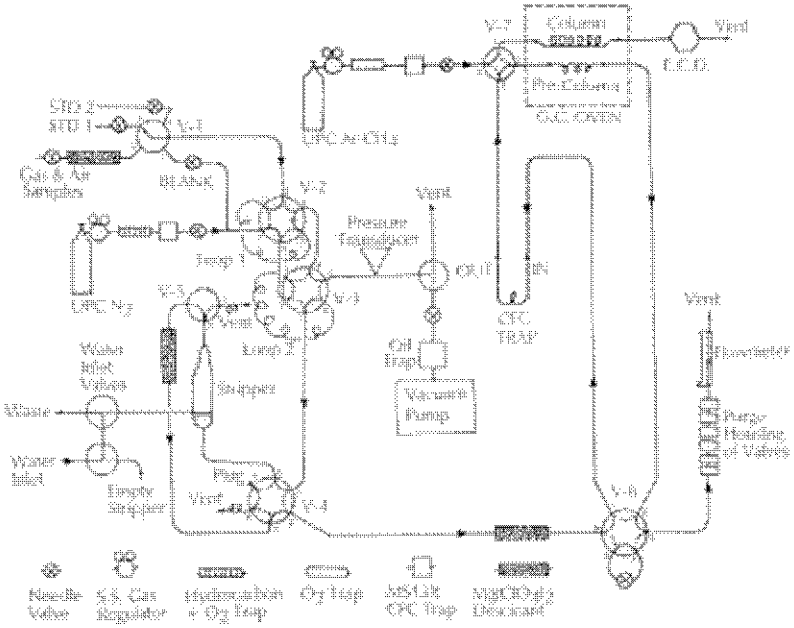

Fig. 2. The CFC analytical system used in this study to pre-concentrate and determine CFC-12, CFC-11, and CFC-113 concentrations. See text for details.

Apparatus for Measurement of CFCs

The CFC analytical system (Figure 2) was modified from the original design of *Bullister and Weiss [1988]*. Some of the changes include: (1) An additional gas tank and regulator were added in order to make the carrier- and stripping-gas flow separate. This reduces the number of times the ECD must be shut down to change gas tanks since the stripping-gas tank can be isolated from the ECD when it is changed. An Ar/CH_4 mixture is used as the carrier gas, and ultra-pure N_2 is used as the stripping gas. The blank-gas supply was connected after the gas-pressure regulator of the stripping-gas supply to monitor the quality of the stripping gas. (2) An additional desiccant tube of $Mg(ClO_4)_2$ was added after the stripper. The gas flow is rerouted through V4 during the changing of this desiccant tube to reduce the frequency of replacing the desiccant tube between valves V4 and V6 and the complications resulting from the interruption of the gas flow through the system. (3) In order to have better control during the filling and emptying of the stripper cell, the inlet valve (V5) was replaced by two 3-way valves (Figure 2). After gas-stripping is complete, the water sample is drained into a preweighed plastic beaker and then weighed. *Bullister and Weiss [1988]* use calibrated syringes to fill the stripping cell and determine the volume of the water sample. (4) A flowmeter was added after V7 to continuously monitor the stripping-gas flow through the system.

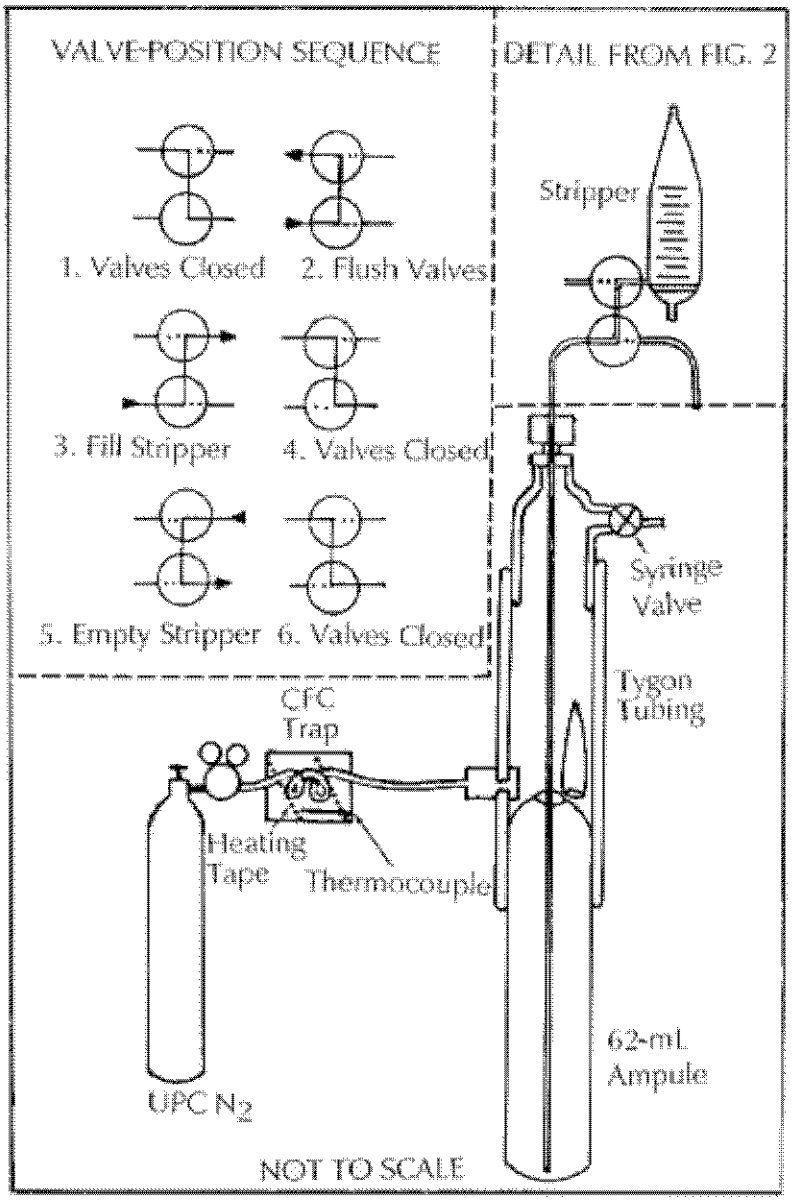

Fig. 3. Apparatus used to inject water samples into the gas-chromatograph system (Figure 2) without contamination with air. See text for details.

Introduction of Water into the Stripping Cell

Contamination of samples is a major concern, because introduction of as little as 0.01 cm^3 of modern air during sampling is detectable and can be a serious problem with older water samples. Figure 3 shows the procedures and apparatus used to transfer the water samples from the ampoules to the stripping cell to eliminate contact with the laboratory atmosphere.

The prescored ampoule is inserted into the Tygon sleeve as shown in Figure 3. Several liters of ultra-pure N_2 that has been further purified by passing through an MS13X trap are passed through the Tygon sleeve and released into the laboratory by means of the syringe valve while the intake valve of the stripping cell is closed (position 1). This procedure removes all the air from around the neck of the ampoule. Next, the syringe valve is closed and the intake valves are turned to position 2 so that the intake valves are flushed with ultra-pure N_2 gas. The borosilicate ampoule is broken along the prescored neck by bending the Tygon tube, the union nut is loosened slightly, and the stainless-steel tube is lowered to the bottom of the ampoule. The union nut is immediately tightened, allowing further flushing of the intake valves with about 15-20

mL of sample, which is disposed of in the waste receptacle. The intake valves are now turned to position 3, filling the stripping cell with the sample (about 25-35 mL). When the desired volume of sample is introduced into the cell, the intake valves are turned to position 2, emptying the rest of the sample into the waste receptacle. The stripping of the water sample begins at this point and continues for the next 4 minutes. After the CFC trap is isolated, the syringe valve is opened and the intake valve is turned to position 4. The empty ampoule is removed and replaced by a new ampoule in preparation for the analysis of the next sample. After stripping the water sample for 4 minutes, the intake valves are turned to position 5, emptying the cell into a preweighed beaker; the intake valves are then closed (position 6). The chromatography phase then begins and continues for the next 6 minutes. The weight of the water is recorded to the nearest 0.01g.

Measurement Procedures

The purged CFCs are quantitatively collected in a cold trap consisting of a column of Porapac-T and Porasil-C held at -30 ^{o}C. The CFCs are released by heating this trap to 95°C. Initial separation of the CFC-12, CFC-11, and CFC-113 from other halocarbons takes place in a precolumn of Porasil-C. After CFC-12, CFC-11, and CFC-113 pass through the precolumn into the Porasil-C column (40 seconds), the carrier gas flow in the precolumn is reversed through valves V6 and V7. This procedure prevents other CFCs and halocarbons with higher retention times from entering the analytical column, back-flushes the precolumn and, thus, significantly decreases the analysis time to about 6 minutes. The concentrations of CFC-12, CFC-11, and CFC-113 are measured with an ECD. Measured concentrations are very small- picog/kg or 10^{-12} g/kg for CFCs and femtog/kg or 10^{-15} g/kg for SF_6. Standard deviations are 3% at 20picog/kg or more, and ~50% at the detection limit of 0.5-1.0 picog/kg. The analytical procedures used here are described in great detail by *Bullister [1984]*, and *Bullister and Weiss [1988]*.

Blanks

Gas and water blanks are used extensively. The gas blanks of carrier or stripping gas are passed through the gas-sampling loops into the cold trap. The purpose of this procedure is to determine the CFC-12 and CFC-11 blanks of the instrument. Usually no CFC-12 or CFC-11 signal is obtained from the gases. If a small CFC-12 blank is obtained, it is an indication that the molecular-sieve traps (MS13X), through which the ultrapure gases are further purified, need to be regenerated. The traps are regenerated by heating at 200°C for 4 hours as specified by *Bullister and Weiss [1988]*. Water blanks are produced by stripping water in an all-glass flask for 2 hours with ultrapure nitrogen that was further purified by passing through an MS13X molecular-sieve trap. The water blank is introduced into the stripping cell of the analytical system and analyzed in the same manner as a regular sample. No CFC-12 or CFC-11 signals are normally observed from these water blanks.

Standards and Calibration

The instrument is calibrated with Standard Marine Oregon Air (Oregon Graduate Center) and Niwot Ridge Colorado Air (CMDL of NOAA). The primary standard is an Oregon air samples that was calibrated by Ray Weiss at the Scripps Institution of Oceanography (SIO). Other standards shown below are secondary standards intercalibrated on the SIO scale. Concentrations of standards used in the USGS CFC laboratory in parts per trillion volume are:

	Tank 0	**Tank 1**	**Tank 2**	**NOAA Tank**
CFC-12	**501.5**	**538.2**	**529.5**	**524.1**
CFC-11	**265.6**	**272.5**	**268.7**	**271.3**
CFC-113	**81.2**	**83.4**	**82.4**	**87.7**

Standards are stored in electropolished passivated stainless steel tanks or Aculife-

treated aluminum tanks.

For an initial calibration at the start of each day, purge gas is injected to provide an instrument blank, then 0, 1, 2, 4, 5, 10, and 15 cc of standard gas (Oregon Standard Marine Air) are injected. At the end of the day, 2 and 5 cc air standards are run to check instrument stability and to determine instrument drift corrections.

The GC is calibrated in the following concentration ranges:

CFC-11 from 0-1200 picog/kg

CFC-12 from 0-2500 picog/kg

CFC-113 from 0-900 picog/kg

Above these concentrations, the instrument is not calibrated. Saturation of the ECD occurs at very high concentrations resulting in the clipping of peaks. Uncontaminated ground water falls within the 0 to 5 cc concentration range of the standards.

Instrument Stability and Drift

CFC-12 drift is typically less than 1 % in 8 hours

CFC-11 drift is typically about 1% in 8 hours

CFC-113 drift is typically 1-3% in 8 hours

Samples that are very contaminated ruin the calibration and cause large drifts. After such contamination occurs, the instrument needs to flush overnight to recover. In extreme cases, the detector and valve rotors can be contaminated. This can cause a week or more of down time.

References

Bullister, J. L., 1984, Atmospheric chlorofluoromethanes as tracers of ocean circulation and mixing: Studies in the Greenland and Norwegian seas, Ph.D. dissertation, 172p. Univ. Calif., San Diego, La Jolla.

Bullister, J. L., and Weiss, R. F., 1988, Determination of CFC3F and CCl2F2 in seawater and air, Deep Sea Res., 35, 839-854.

Pankow, J. F., Magnitude of artifacts caused by bubbles and headspace in groundwater determination of volatile compounds in water, Anal. Chem., 58, 1822-1826, 1986.

Pankow, J. F., Minimization of volatilization gasses during sampling and analysis of volatile organic compounds, p. 73-86. In: Significance and Treatment of Volatile Organic Compounds in Water Supplies, N. M. Ram, Christman R. N. and K. P. Cantor (Eds.), Lewis Publishers, Inc., Chelsea, Michigan, 1990.

Rasmussen, R. A. and M. A. K. Khalil, Interlaboratory comparison, preparation, and stability of dichlorofluoromethane samples and standards, Anal. Chem., 55, 1834-1836, 1983.

Rasmussen, R. A., and Khalil, M. A. K., 1983, Atmospheric trace gases at the South Pole, Antarct. J., U.S., 18, 250-252.

Reynolds, G. W., Hoff, J. T., and Gillham, R. W., 1990, Sampling bias caused by materials used to monitor halocarbons in groundwater, Environ. Sci. Technol., 24, 135-142.

U.S. Geological Survey, Reston, VA, USA
Original Design by Brian C. Norton | 2004 Design by Chad M. Veloso
Web Page Feedback

3H: SF_6 ANALYSIS

The Reston SF_6 Laboratory

Analytical Procedures for SF6

SF_6 is determined in the laboratory using a purge-and-trap gas chromatography procedure with an ECD detector. This section describes details of the measurements, including sampling procedures, the apparatus for measuring SF_6 concentrations, the procedure for introducing the water into the stripping cell, the vacuum extraction procedure of SF_6, the measurement procedure, blanks, standardization and calibration procedures, and instrument stability.

Collection of Water Samples

The easiest sampling method was the collection of ground water samples in **2 to 2.5 L glass bottles.** The water in-flow tube is placed in the bottom of the bottle displacing the air with water. After least 3 L of over-flow, the tube is removed. The bottles are capped with Polyseal screw-caps without headspace. The cone seal in the caps allows for some expansion of the water on warming. However, caps have to be periodically **slightly** loosened to prevent the glass bottles from breaking when the ground water temperature is significantly lower than the ambient air temperature. The analysis was is performed near the sampling site or the bottles are shipped in coolers to the Reston, Virginia laboratory.

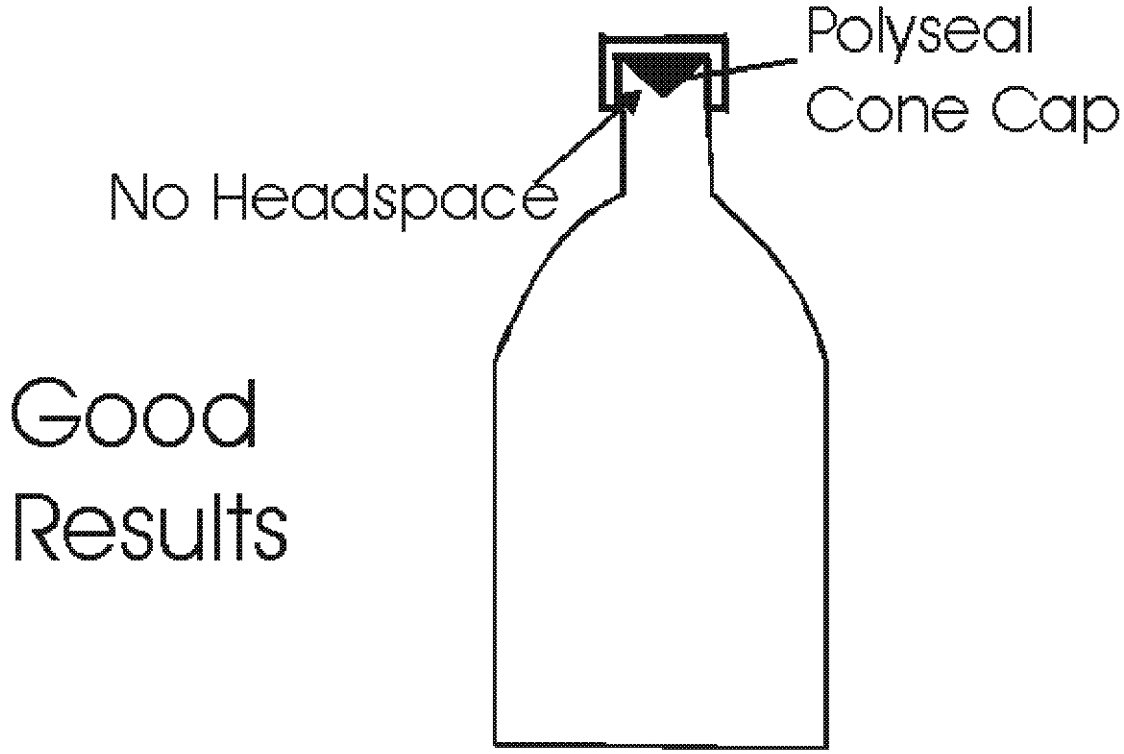

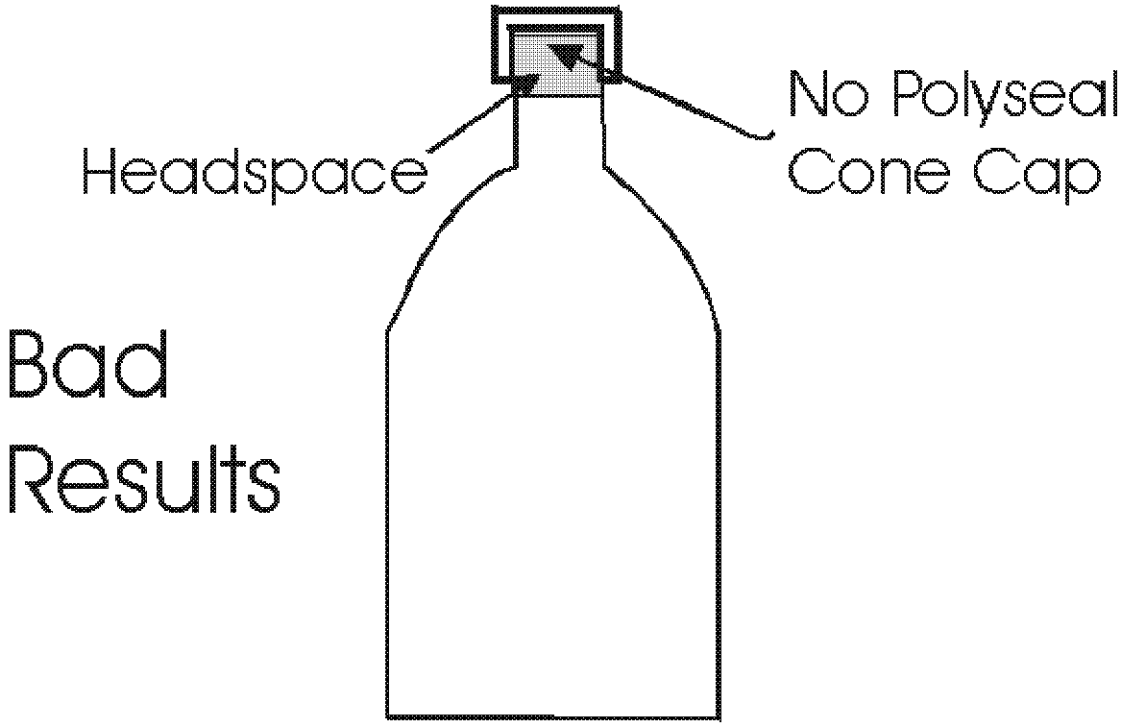

EXTRACTION AND MEASUREMENT OF SF_6

Figure A shows the apparatus used for the vacuum extraction of SF_6 from ground water and is similar to the system described by Law et al (1994) and Wanninkhof and Ledwell (1991). The apparatus consisted of a 1-L glass stripping vessel and various valves that control the flow of gases, water, and

the vacuum. First valves **V-1**, **V-A** and **V-C** are turned to the closed positions, then **V-B** to the vacuum and V-D are opened. A high vacuum is pulled in the 1-L gas stripper. The stripper is isolated from the vacuum by closing of valves **V-B** and **V-D**. The water sampling tube, a 3.2 mm OD copper tube is placed in the bottle and **V-A** is turned from the off position to the water-in position. The water intake tube is slowly lowered into the bottom of the 2 or 2.5 L bottle. The vacuum in the stripping cell pulls the water in and sprays into the vessel through 6 nozzles. After about 100 mL of water is added into the vessel, the **V-A** is turned into the N_2 position and the stripper is pressurized with SF_6-free N_2. The N_2 pressure expels the water to waste from the stripper when **V-B** is turned from the off to the waste position. This procedure cleans the intake tube and valves and prevents carry-over of SF_6 from the previous sample. The stripper is then re-evacuated. One L of water is sprayed into the cell, vacuum extracting about 90 percent of the SF_6 from the water. N_2 is introduced at the bottom of the stripper through a stainless steel gas-dispersion tube when **V-C** is slowly opened. After the stripper was pressurized with N_2, **V-1** is turned allowing the N_2 and stripped SF_6 to pass the Ascarite-magnesium perchlorate drier and then and then the SF_6 is retained on a 1 m 3.2 mm OD Porapak-Q trap (figure B). Two CO_2, H_2S and H_2O traps are on the water stripping system, V-2 is used to switch from one trap to the other without interrupting the analysis to replace traps. The SF_6 trap is pre-cooled to a temperature of –70 to 79°C in a dry ice-isopropyl alcohol dewar flask. After exactly 6 min of stripping at precisely 250 mL/min, the trap is switched from the stripping system to the analytical system by turning valve **V-3**. The stripping cell is emptied and prepared for the next sample. A large volume of N_2 ts needed to efficiently strip the SF_6 from the 1L of water, but break-though of SF_6 occurs on short traps. To significantly improve the chromatography of SF_6, the sample is transferred from the 1 m trap by placing the trap in 95°C water to the 0.1 m pre-cooled trap 2. The transfer is completed in 1 min, trap 2 is isolated from the carrier flow by turning **V-7**, and then trap 1 is switched from the analytical system to the water stripping system by turning **V-3**.

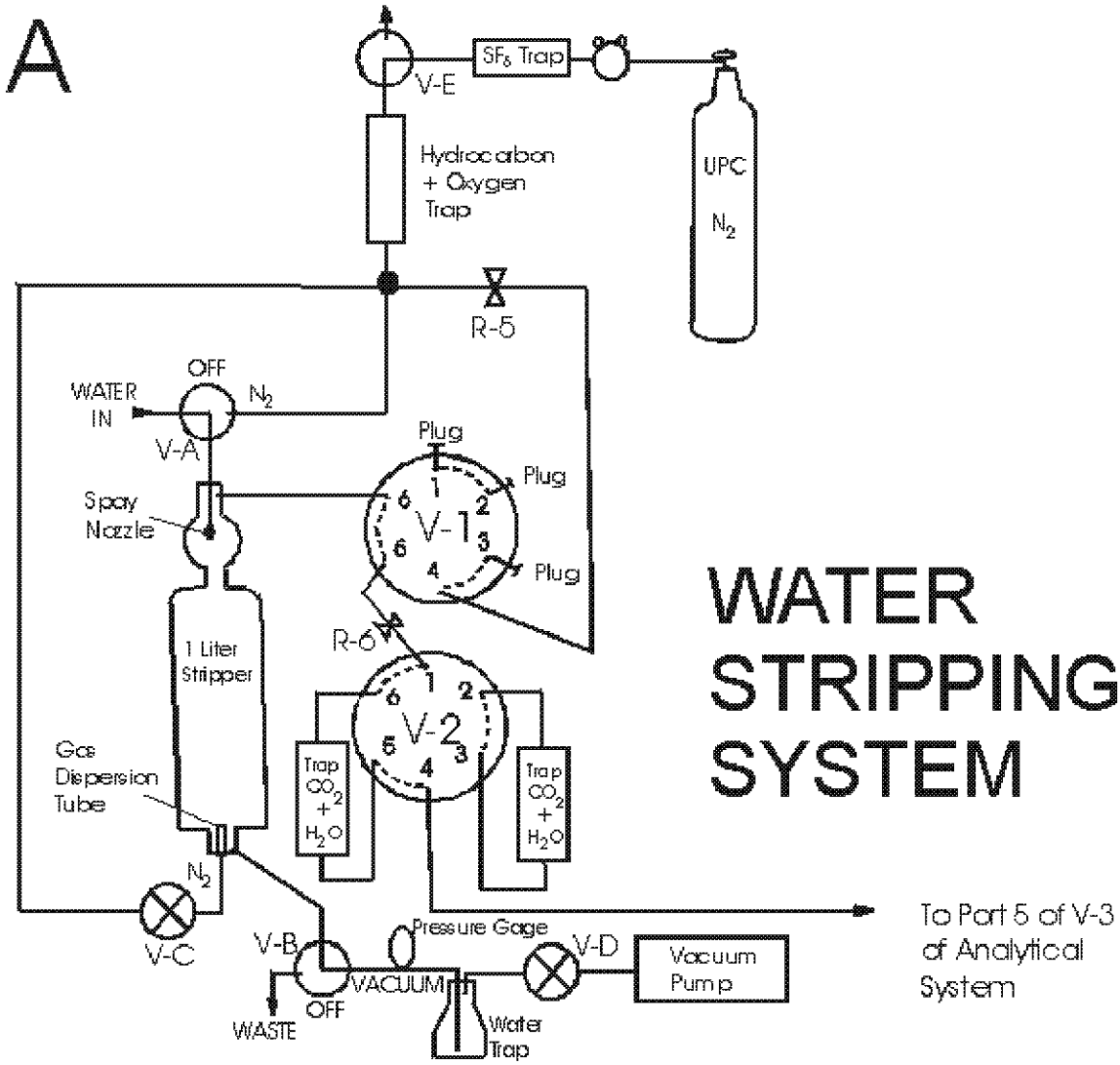

The analytical system bears similarities to other analytical instruments used to measure SF_6 (Law et al, 1994; Wanninkhof and Ledwell, 1991; Maiss and others, 1994), however, many improvements were made to increase flow and pressure stability, and increase sensitivity. It soon became obvious that the analytical systems described in the literature were inadequate for the measurement of very low concentrations of SF_6 normally found in ground waters and required greater flow and pressure regulation. The instrument (figure B) was modified to allow the stripping of much larger volumes of water. The design of the gas distribution system was critical for obtaining good chromatograms from very small signals that are obtained from natural levels of SF_6.

Ultra-pure carrier grade (UPC) N_2 is used through out the system. The carrier gas is purified with a charcoal and a hydrocarbon-O_2 trap. The pressure of the gas is controlled with four ultra-clean pressure regulators and the flow adjusted by three needle valves. Additional pressure and flow regulation is provided by dummy columns and a capillary restrictor. A flow controller after the ECD to maintains constant carrier flow through the detector. All these measures prevent flow and pressure fluctuation during the switching of valves, which cause background drift and noise.

The sample introduction system consists of the 4-position selector valve **V-4**. This valve selects between two gas standards, air, and carrier gas. Gas samples can also be introduced into the sampling loops from glass ampoules by attaching the flasks to port 1 of valve **V-4**. The gas sampling loops are evacuated by first turning valve **V-F** to the vacuum position and then to the off position. The sample is released by breaking the pre-scored tip of the ampoule. The samples can be injected by valves **V-5** or **V-6** into the analytical system at ambient, sub-ambient, or greater than atmospheric pressures. All volumes in the gas-introduction system have been precisely measured and the pressures determined with a pressure transducer. The gas injection system consists of two valves and four sampling loops with volumes ranging from 0.1 to 15 mL. The loops can be directly injected into the analytical column or the SF_6 can be trapped at about –75°C on the short Porapak Q trap. Alternatively, SF_6 concentrations can be measured from large volumes of gas by attaching the sample vessel to port 5 of V-3 and a vacuum pump to port 4 of **V-3**. First, the lines are evacuated, then the tip pre-scored glass vessel broken, and the sample gently pulled through the large pre-cooled trap by the vacuum pump. The large trap is transferred from the water stripping system to the analytical through **V-3** and then the SF_6 moved from the large to the small trap.

After the SF_6 is trapped, the trap 1 is isolated by valve **V-7**, then the trap is heated to 95°C, valve V-8 is switched from the back-flush position to the run position, and the trap injected into the analytical column. The SF_6 enters the analytical column and the chromatogaphy phase begin. After the SF_6 is measured, the valve V-8 is switched to the back-flush position preventing the O_2 and other highly retentive compounds from entering the ECD. This procedure greatly reduces the analytical time.

The sample introduction system consists of valve **V-1**. Gas standards, air, and gas in glass ampoules can be introduced into the sampling loops at ambient, sub-ambient, or greater than ambient pressures. All volumes in the gas introduction system have been precisely measured and the pressure of the gas in the sampling loops is measured by a pressure-transducer. Valves **V-5** and **V-6** gas injection system. The loop volumes range from 0.1 to 15 cc. The loops can be directly injected into the analytical column or the SF_6 trapped at –70 to –79°C on the Porapak Q trap. Valve V-5 is used to isolate the trap. After the SF_6 is trapped, the trap is isolated and heated to 95°C, **V-6** is switched from the back-flush to the run position and the trap is opened. The SF_6 enters the analytical column and the chromatogaphy begins. After the SF_6 is measured but before the O_2 enters the electron capture detector, **V-6** is switched to the back-flush position, sending to waste the O_2 and the highly retentive halocarbons, and thus significantly shortening the analytical time.

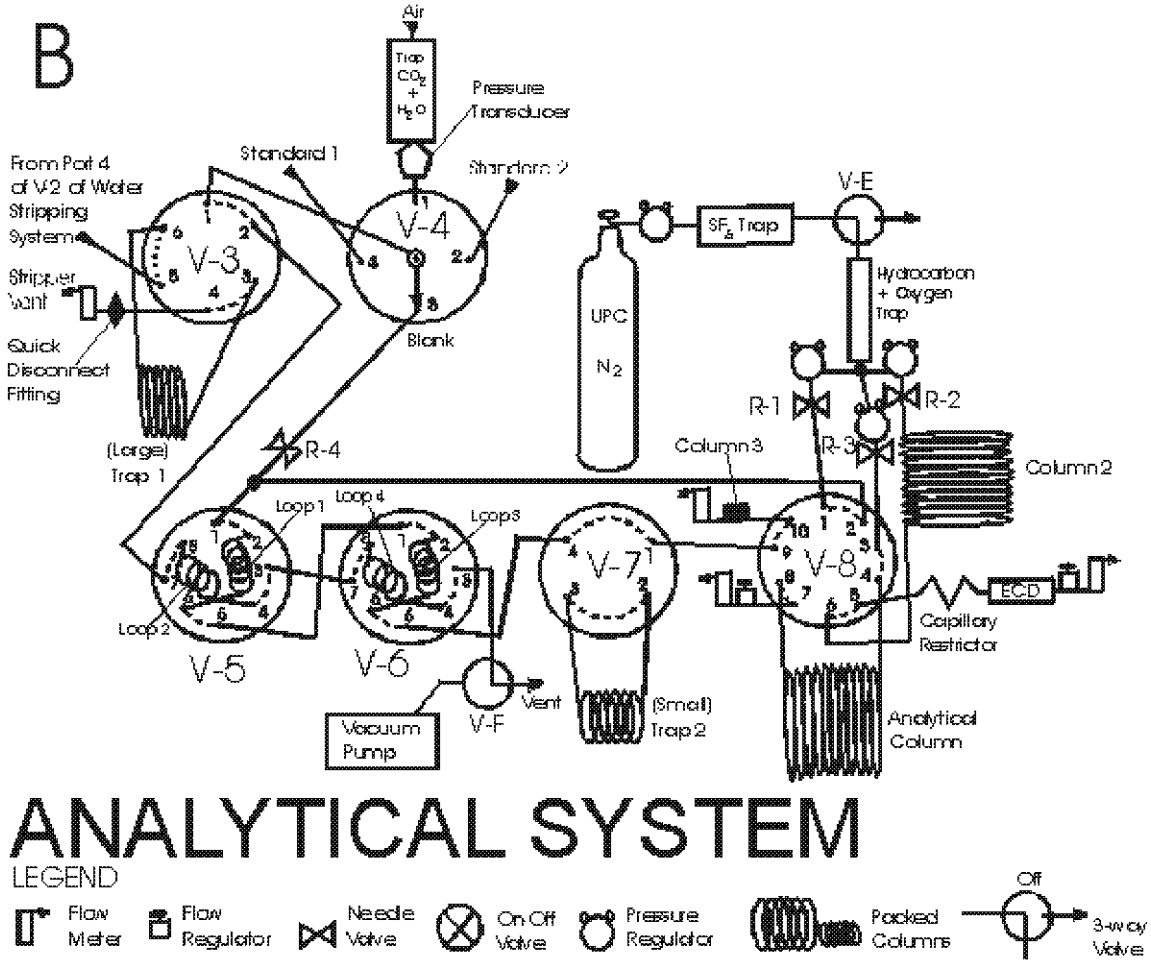

Calibration of Analytical System

The instrument was calibrated using a blank, and 0.1, 0.3, 0.5, 0.6 cc of a 104 ppt Scott gas standard. The gas was directly injected into the analytical columns or was trapped on the Porapak-Q trap and then injected onto the column. Both procedures yielded identical results indicating 100-percent efficiency in the trapping of SF_6. The system also was calibrated using a blank, and 5, 10, 15, 30, and 45 mL of a NOAA air standard. SF_6 in all air samples and standards are trapped prior to injection into the analytical column.

Precision and Accuracy of Measurements

Standard deviations of better than 3 percent were routinely obtained for repeated measurements of standards. The calibration was linear through the entire measuring range. Standards were prepared by gravimetric procedures, accuracy is about 1 percent. For water samples, precision was about 50 percent at the detection limit of less than 0.01 fmol/L and about 5 percent for concentrations greater than 0.1 fmol/L.

Analysis of SF_6 in water references

Busenberg, E., and PlummerL.N., 2000, Dating young ground water with sulfur hexafluoride: Natural and anthropogenic sources of sulfur hexafluoride. Water Resources Research, 36, 3011-3030.

Law, C. S., Watson, A. J., and Liddicoat, M. I., 1994, Automated vacuum

analysis of sulfur hexafluoride in seawater: derivation of the atmospheric trend (1979-1993) and potential as a transient tracer, Marine Chem., 48, 57-69.

Maiss, M., J. Ilmberger, A. Zenger, and K. O. Munnich, A SF_6 tracer study of horizontal mixing in Lake Constance, *Aquat. Sci., 56*, 307-328, 1994.

Sliwka, I., and Lasa, J., 2000, Optimisation of the head-space method in measuring SF6 concentration in water. Chem. Anal. (Warsaw), 45, 59-72.

Wanninkhof, R., and Ledwell, J. R., 1991, Analysis of sulfur hexafluoride in seawater, Jour. Geophys. Res., 96C, 8733-8740.

U.S. Department of the Interior
U.S. Geological Survey, Reston, VA, USA
Original Design by Brian C. Norton | 2004 Design by Chad M. Veloso
Web Page Feedback

Last Modified on Wednesday, August 11, 2004

ATTACHMENT 4

SAMPLING PROCEDURES

4A: PERCHLORATE ISOTOPE SAMPLING

Summary of Method for Isotopic Analysis of Perchlorate in Groundwater

Environmental Isotope Geochemistry Laboratory
University of Illinois at Chicago (UIC)
Contact: Leslie Patterson at (312) 413-0098, e-mail lpatte2@uic.edu

Field Extraction

Extraction of perchlorate from groundwater samples is accomplished by sorption onto a highly perchlorate-selective bifunctional anion exchange resin. The laboratory provides a sampling apparatus, consisting of a prefilter and a glass column packed with a mixture of bifunctional resin and glass beads, for each sample to be collected. The amount of resin in the sampling apparatus is based on the expected perchlorate concentration in the groundwater, and optimized to recover ~20 milligrams of perchlorate. In the field, groundwater is passed through the sampling apparatus at a maximum flow rate of 0.5 liters per minute (the optimal flow rate is 10 bed volumes per minute). For a sample concentration of 20 ppb perchlorate, the total volume of water required is 1,000 liters (264 gallons), requiring at least 34 hours of flow. The sampling apparatus is then disconnected, drained, plugged and returned to the UIC Environmental Isotope Geochemistry Laboratory.

4B: TRITIUM-HELIUM SAMPLING

Tritium/Helium-3 Dating

$^3H/^3He$ > **SAMPLING**

$^3H/^3He$ Sample Collection
Sampling Pictures

The Noble Gas Lab of Lamont-Doherty Earth Observatory recently informed the CFC lab that many of the He samples that are being collected by USGS projects are not properly crimped. To properly seal the copper tube, the brackets on the top and bottom must actually make contact so that light can no longer be seen through the contact area. The portion of the bracket that actually crimps the copper tube will never close completely on either side of the tube due to the thickness of the copper. Short of breaking the bolts off, it is impossible to over tighten the flanges or pinch the ends off the copper tube because the crimp area is designed with the precise clearance for a proper seal. In the field, I have noticed that some individuals lack the strength or the mechanical ability to tighten the nuts properly. In most cases the problem can be overcome by increasing the length of the wrench and by alternately tightening the nuts several turns at a time until the tube is completely sealed. If you suspect that a tube is not crimped properly, please do not send the sample to Lamont to be analyzed. For further information on sample collection, please see **http://water.usgs.gov/lab/3h3he/sampling/**.

Proper collection of a water sample for $^3H/^3He$ age determination requires:

1.Filling a special copper sample tube , in duplicate, that is used for helium and neon analyses, and determination of the $^3He/^4He$ isotope ratio (δ^3He) of dissolved helium.

2.Filling two 500cc bottles, which are used for tritium determination by helium ingrowth.

Safety-coated 500cc glass bottles with polycone seals are recommended for the tritium sample, though high-density polyethylene bottles with polycone seals may be substituted. If glass bottles are used, a headspace of several cc's should be left in the bottle to prevent breakage on warming (expansion). The water samples for helium, neon, and tritium determinations are collected in special pinch-off copper tubes (3/8-inch diameter, 30-inch length, containing about 40 cc of water, and fitted with stainless steel pinch-off clamps at each end). These sample tubes are prepared and owned by Lamont-Doherty Earth Observatory who maintains a stock of them and ships directly to the project office once the request for sample tubes form is completed and submitted through this web page . (Internal USGS access only)

Both the tritium and helium samples should be collected in duplicate. The duplicate water sample for tritium determination (duplicate 500cc bottle)

should be retained at the Project Office, but both copper tubes should be returned for each sample. The project should request the appropriate number of copper sample tubes from this page .

The project will be billed $50 for each copper sample tube, to be refunded when the samples are submitted for analysis and/or unused sample tubes are returned to the contract laboratory.

The copper tube for He and Ne determinations can normally be flushed and filled within 5 minutes. Remove and discard the plastic caps that cover the ends of the copper tube, taking care not to scratch or bend or otherwise damage the ends of the copper tube. Damage to the ends of the copper tube may prevent proper attachment of the sample tube to the vacuum extraction line for sample preparation at the contract laboratory. The copper tube, which is fixed in an aluminum channel holding the stainless steel pinch-off clamps, is connected to a closed path from the well or pump. The connection to the well or pump can be of almost any material including plastic, rubber, or metal tubing, providing that all connections are airtight and will not come loose when back pressure is applied during closing of the copper tubes. Clear plastic tubing (Tygon) is preferred because one can visually observe whether air bubbles are present in the water line. It is recommended that connections be secured with stainless steel hose clamps, again being careful not to damage the end of the copper tube. The length of the path from the well or pump discharge should not exceed about 5 feet to minimize the possibility of gas separation from the water sample prior to sealing the copper tube.

Any trapped air or formation of gas bubbles in the helium water sample will produce erroneous results. Back pressure is normally applied to the discharge end of the copper tube during flushing. The project office will need to obtain a small valve and suitable compression type fittings to attach the valve to the discharge end of the copper tube. Figures 1 and 2 show diagrams of the copper tube and back-pressure valve assembly, respectively. The symbols for "no bubbles" show areas where clear plastic tubing can be inserted to observe inflow to the copper tube (Figure 1) and discharge from the copper tube (Figure 2) before the back pressure valve to check for bubble formation. Both water flow and back pressure on the sample should be increased if gas bubble formation is observed in either clear plastic tubing. The valve should not be closed completely during filling because a steady flow of water must be maintained through the copper tube during sealing. Suitable parts to make the back pressure valve assembly are:

Whitey valve SS-1RS6, 3/8-inch stainless steel valve

Swagelok 3/8-inch Nylon ferrules set, NY-600 sets (10 each)

These items are available through the Swagelok Companies. Check local listings for suppliers of Swagelok products or equivalent. An over-pressure of approximately1 atmosphere, 14 psi, is normally sufficient to prevent gas bubble formation in the ground-water sample. However, in general, to prevent gas bubble formation, the back-pressure applied must exceed the internal pressure of the dissolved gases in the water sample.

FIGURE 1

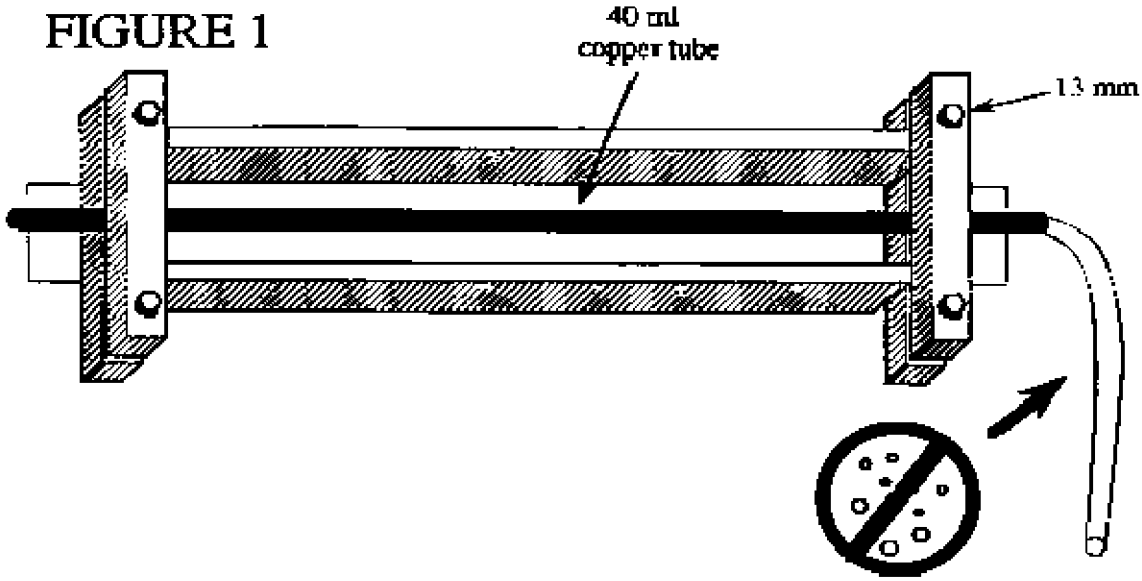

FIGURE 2

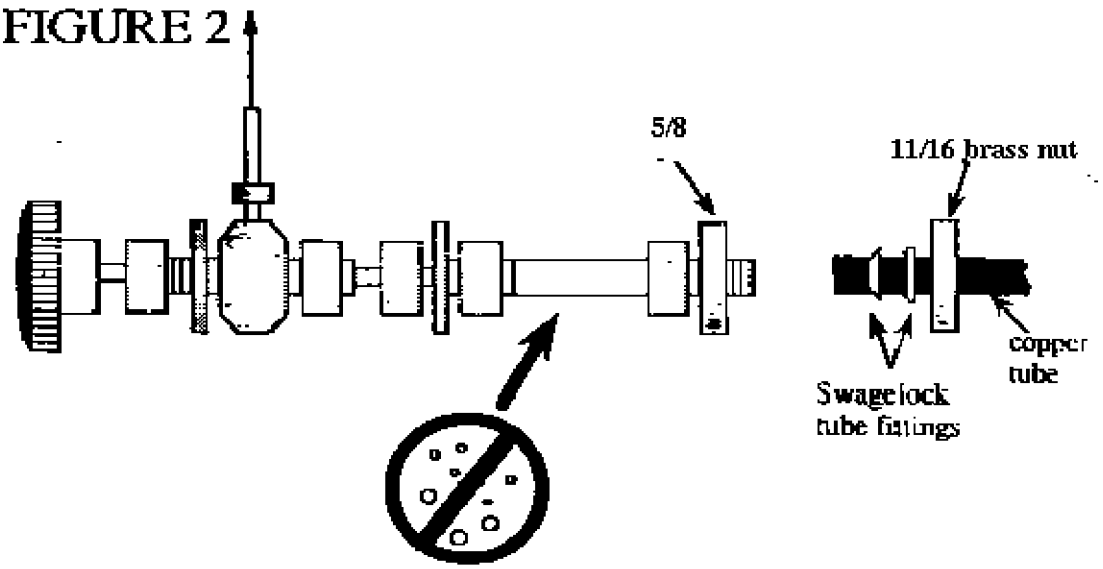

Figure 3 (A-D) shows photographs of the equipment used to take the noble gas and tritium sample. Figure 3A shows the copper tube in an aluminum channel with stainless steel pinch-off clamps, a 1/4-inch copper tube used to connect to the pump, and back-pressure value. Figure 3B shows the parts of Figure 3A connected for sampling and a 500cc safety coated glass bottle with polycone seal for collection of a tritium sample. Note that in this case, clear plastic tubing was not inserted at the inflow and outflow ends of the copper tube and thus, in this case, there is no opportunity to check if gas bubbles are forming inside the tubing. Figure 3C shows the back-pressure valve connected to the end of the copper tube. Figure 3D shows the ends of properly sealed copper tubes (note the centering of the tubes in the pinch-off clamps).

A socket wrench with 13-mm (note metric bolt) socket is used to turn the bolts that close the pinch-off clamps. Prior to turning the bolts, the entire line from the well through the copper tube should be tapped forcibly to dislodge any gas bubbles that may be in the line or copper tube. During the tapping process, the copper tube should be held at an approximate 45-degree angle with discharge pointing up, to assure that gas bubbles, if present, will be completely flushed. This tapping procedure normally requires about 1 minute to complete. Once satisfied that water flowing

through the copper tube is free of any gas bubbles, the socket wrench is used to close the bolts on the pinch-off clamps, beginning with the bolts at the discharge end. Before turning the bolts, be sure to position the copper tube in the approximate center of the pinch-off clamp. There are two bolts on each clamp. Turn the bolts in successive order (back and forth approximately four (4) times until firmly closed) so that the blades of the pinch-off clamp close approximately evenly. The pinch-off clamps are machined to leave about a 1-mm space when the bolts are turned all the way down; however, care should be taken not to over tighten and strip the threads on the bolts. After tightening the discharge end bolts, tighten the upstream bolts in the same manner, again centering the copper tube between the blade. When done, double check to be sure that all bolts are tight. The sample is then complete and the copper tube can be disconnected from the well or pump.

Remove the back-pressure valve from the discharge end of the copper tube. Precautions should be taken not to scratch or otherwise damage the ends of the copper tubes. If waters are corrosive, such as seawater or other saline or acidic waters, the ends of the copper tubes should be washed with dilute water to prevent corrosion, which might prevent obtaining a proper seal when extracting the noble gases. Care should be taken not to further bend the ends of the sealed copper tubes because they can easily break off. If the tubes were received with plastic caps protecting the ends, do not replace the caps after filling. Additional instructions on ground-water sampling for noble gases provided by Lamont-Doherty Earth Observatory appear at the end of this document.

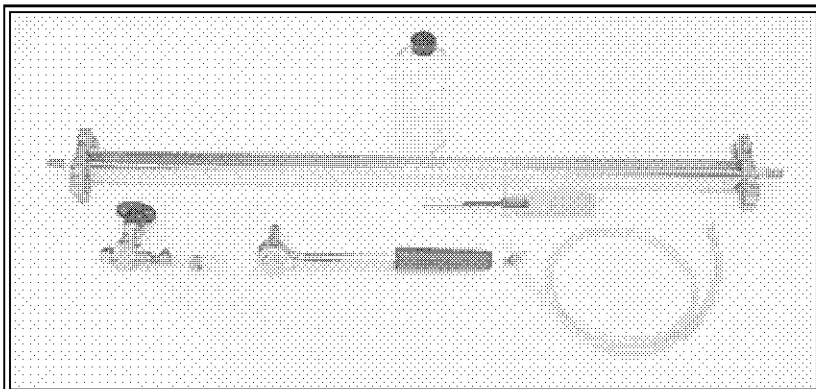	Figure 3a. Copper Tube in Aluminum Channel
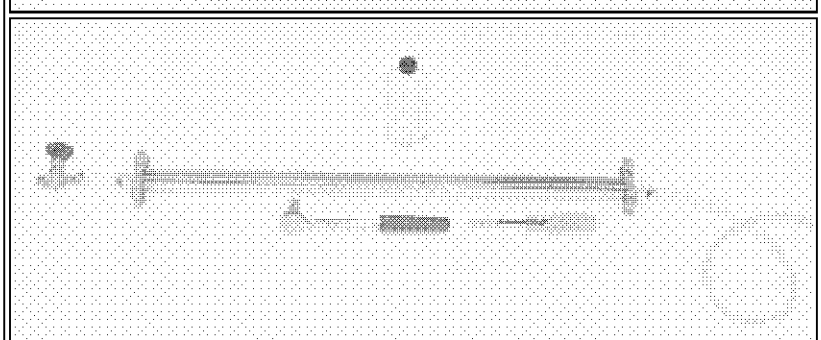	Figure 3b. Parts Connected for Sampling
	Figure 3c. Back-Pressure

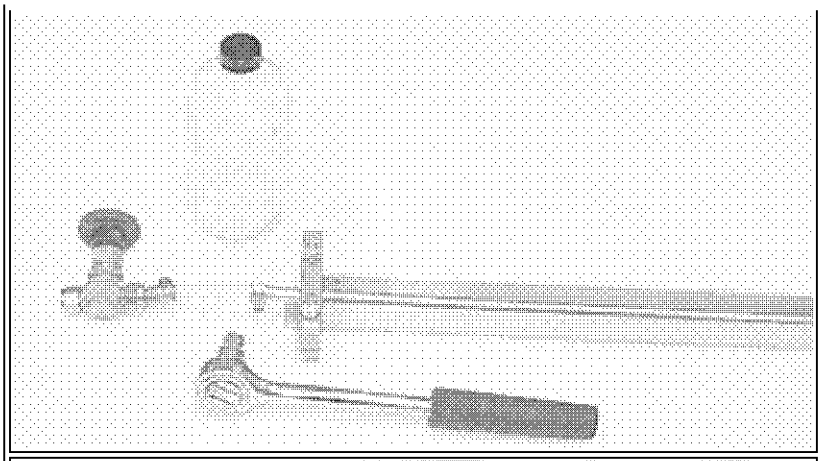

Valve Connected

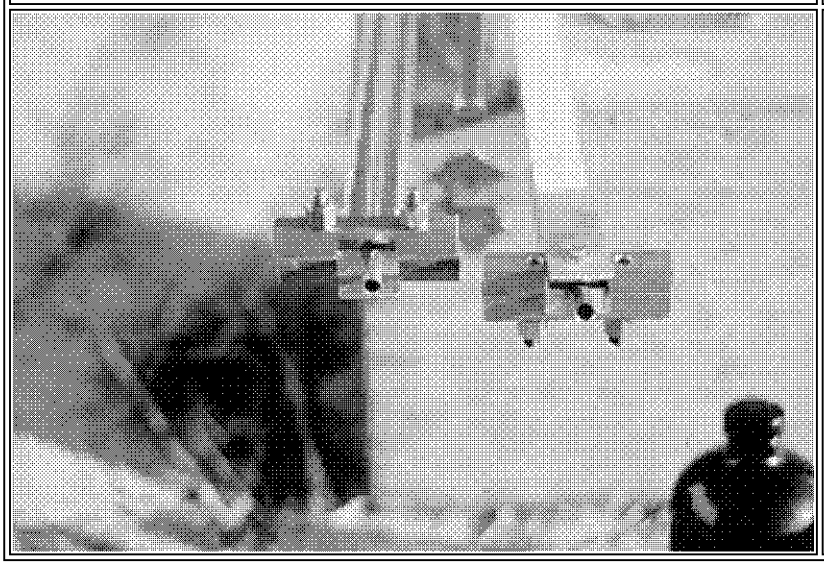

Figure 3d. Properly Sealed Copper Tubes and tritium bottles

USGS personnel will be responsible for proper collection of water samples, including (1) care in avoiding possible damage to ends of sample tubes which might preclude proper connection to laboratory high-vacuum extraction lines, and (2) exclusion of gas bubbles during sample collection. The contract lab will report samples that could not be extracted or analyzed because of improperly sealed sample containers and/or damaged sample containers. Improperly collected samples, such as samples containing gas bubbles, are usually not detected until the analysis of noble gases is made. Therefore, in most cases, the Project Office will be charged the full price of analysis for improperly collected samples, even though no age can be determined.

SUBMITTAL OF SAMPLES TO THE CONTRACT LABORATORY

When the samples have been collected and are ready to be analyzed, the project office must download and complete the Sample Submission Form (an Excel spreadsheet) from . The completed submittal spreadsheet is returned by e-mail attachment to **jwayland@usgs.gov** with a cc to **cfc@usgs.gov**. Sample ID tracking numbers will be assigned by the Reston Chlorofluorocarbon Laboratory and retuned to the project office via e-mail, and/or as stick on labels. It is the responsibility of the project office to properly identify each sample with the sample ID tracking number. The project office then ships the samples to Lamont-Doherty Earth Observatory and notifies the Reston Chlorofluorocarbon Laboratory (via e-mail to **jwayland@usgs.gov** with cc to **cfc@usgs.gov**) of date of shipment. Lamont-Doherty Earth Observatory will notify the Reston Chlorofluorocarbon Laboratory when samples are received and condition of samples upon receipt. The project office will be notified of

any samples damaged in shipment. Note: NWQL ASR forms are no longer used to request analytical services for $^3H/^3He$ dating (use submittal spreadsheet as described above).

SENDING THE SAMPLES TO THE CONTRACT LABORATORY

Ship the sample tube(s) and water samples for tritium determination to

Dr. Peter Schlosser
Lamont-Doherty Earth Observatory
Geochemistry Bldg, RM 74
Route 9W
Palisades, NY 10964

Precautions need to be taken to assure that samples shipped in winter months do not freeze during shipping.

ABOUT PRICES

All prices will remain the same as previously charged through the NWQL during FY01. Billing by SV will be processed through the Branch of Regional Research, ER (contact: Sharla R. Pierce, AO; **srpierce@usgs.gov**). The price in FY01 remains $875.00 (Schedule 1033 and labcode 2112). A deposit of $50.00 per sample tube is collected via SV when sample tubes are requested, and refunded when samples are shipped to Lamont-Doherty Earth Observatory, including refund for returned unused sample tubes. Samples will NOT come through NWQL and costs will NOT be charged by the NWQL.

REPORTING OF RESULTS

Results will be reported to the project office as they are received from the contract laboratory (Noble Gas Laboratory of Lamont-Doherty Earth Observatory). Normally the contract laboratory issues two reports. The first, with yellow cover, is issued when a sufficient number of analyses have been made to permit preliminary interpretation of age. The Project Office should carefully review these results and follow with questions to the contract laboratory (through Julian Wayland; **jwayland@usgs.gov**). A final report is issued (with blue cover) when all analyses that can be made are complete and interpreted. If further interpretation and/or analyses follow, the contract lab may issue a revised final report (green cover). Each report is mailed to the Project Office from the Reston Chlorofluorocarbon Laboratory, which retains a reference copy.

QUESTIONS

Questions about collection and submittal procedures, or information about sample status should be directed to Julian E. Wayland (**jwayland@usgs.gov**) 703-648-5847. All billing will be handled through Reston and all data will be delivered through Julian E. Wayland. Technical information on sample collection and interpretation of Tritium/Helium-3 age can be found at **http://water.usgs.gov/lab/cfc/**. Technical questions regarding interpretation of Tritium/Helium-3 age can be directed to Niel Plummer (**nplummer@usgs.gov**), 703-648-5841 or Ed Busenberg (**ebusenbe@usgs.gov**), 703-648-5726.

SUPPLEMENTARY SUBMITAL INFORMATION

In addition to the information provided on the submittal spreadsheet, it is suggested that additional information be provided to the Contract Laboratory that will help in sample identification and interpretation of age. The submittal information sent to the Noble Gas Laboratory at Lamont-Doherty Earth Observatory should include a cover letter with the following information (some of this will already be in the submittal spreadsheet):

1. Site I.D.
2. Date and time of collection.
3. Ground-water temperature.
4. Estimated, or known, tritium content.
5. Estimated, or known, elevation of the recharge area for the sample.
6. General description of the hydro-geologic environment, location, and well construction information.
7. Any information regarding possible tritium contamination of the sample.
8. The name, FAX number, e-mail address, and phone number of the Project Chief or person technically responsible for the samples.

SHIPMENT OF SAMPLES

Both copper tubes and one 500cc water sample should be suitably packaged and shipped directly to:

Dr. Peter Schlosser
Lamont-Doherty Earth Observatory
Geochemistry Bldg, RM 74
Route 9W
Palisades,NY 10964

The duplicate 500cc water sample for tritium determination by helium ingrowth is retained at the Project Office until results are received. During cold periods, precautions should be taken to ensure that water samples do not freeze during shipment.

Additional Information from Lamont-Doherty Earth Observatory

L-DEO, July 20, 1994

~~WARNING.- Watch out for gas bubbles in the plastic tubing! Make sure there is no contact of the water with air before you take the sample.

1. SAMPLER PREPARATION

Write the sample location, date, and time, on the aluminum channels with a waterproof marker. Mark the channels before you begin to draw water through the sample container. Whenever possible, take duplicate samples.

Both ends of the aluminum channel have clamps to hold a piece of copper tube. They may rattle loose during shipment. These clamps should be finger-tightened to hold the copper tube firmly on center in the aluminum channel (Figure 1).

For sampling water under high pressure, you need to install a pressure valve on one end of the copper tube. Slide a brass nut over the copper tube as

shown in Figure 2. Next, slide two "Swagelock" nylon fittings on the tube so they rest inside the nut (see Figure 2, watch the orientation!). Screw the pressure valve into the brass nut and tighten by hand. Be careful not to break the plexiglass tube.

Place a piece of inner braided PVC tubing onto one end of the copper tube and fix it with a hose clamp. Make sure that you do not deform the copper tube by tightening the hose clamp. Connect the other end of the tubing to the pump discharge.

2. FLUSHING

Open the pressure valve completely. Hold the copper sampler vertically (pressure valve UP) with one hand and the ratchet wrench with the other hand. Allow the water to run at least 1 minute through the system to flush the sample tube. Keep the pressure in the system as high as possible (it is safe up to 10 bars). Watch the PVC tubing and the plexiglass tube near the valve (Figure 2) for bubbles. Bubbles do preferentially form near fittings. If bubbles are present, squeeze the tube or knock against the tube to get rid of the bubbles. You may also try to increase the pressure further by reducing the flow through the copper tube by partially closing the brass valve. During flushing, bang the side of the aluminum channel with the ratchet handle to remove trapped air bubbles from the copper tube. Watch again the plexiglass tube between the valve and the sample container for bubbles (Figure 2). Close the pressure valve completely. Make sure that the sample container was flushed at least 1 minute with bubble-free water. If you cannot avoid formation of bubbles, take the sample anyway, and mark the sample container accordingly.

3. SEALING

Once flushing is complete and no air bubbles appear in the PVC tubing, the copper tube may be closed off. Close the valve completely. Tighten the clamp which is closer to the pressure valve (top clamp, outflow) first. Tighten each screw a little at a time until the outer edges of the clamp touch. You have tightened the clamps sufficiently when you notice that it is getting much harder (almost impossible) to tighten the clamp further. Do not worry, it is not easy to shear the bolts. The clamp will bow somewhat around the copper, so that it maintains a constant pressure on the copper seal. Watch the plastic tubing for bubbles while tightening the top clamp. Tighten the bottom clamp and remove the plastic tubing. If you think there are bubbles inside the copper tube after it has been clamped, write "BUBBLES?" on the aluminum channel. Remove the pressure valve. You can reuse the nylon fittings and the brass nut.

4. SAMPLER STORAGE

Shake the sample container a little to remove the excess water from the ends. If the water is very corrosive (high salt content), rinse the inside of the copper tube ends by spraying low salinity water into them and shaking out the excess.

Sampler should be returned to the box immediately after cleaning and then stored out of the weather. The ends of the copper tube are very fragile after

the tube is squeezed.

POINTS TO REMEMBER

1. Avoid bubbles.
2. Close clamp at outflow end first.
3. Copper tube ends are very fragile after clamp is tight.
4. If you think there are bubbles inside the copper tube after it has been clamped, write "BUBBLES?" on the aluminum channel.
5. Make sure that the sample container is properly marked (date, time, location).
6. Take duplicates whenever possible!

Good Luck!!!

Dr. Peter Schlosser
Lamont-Doherty Earth Observatory
Geochemistry Bldg, RM 74
Route 9W
Palisades, NY 10964

U.S. Department of the Interior
U.S. Geological Survey, Reston, VA, USA
Original Design by Brian C. Norton | 2004 Design by Chad M. Veloso
Web Page Feedback
Last Modified on Friday, August 13, 2004

4C: CFC SAMPLING

The Reston Chlorofluorocarbon Laboratory

CFC > SAMPLING

New CFC Sampling Method (bottle)

(Printable version/Word file 277kb)

COLLECTION AND PRESERVATION OF WATER SAMPLES FOR CHLOROFLUOROCARBON ANALYSIS IN GLASS BOTTLES WITH FOIL-LINED CAPS

Reston Chlorofluorocarbon Laboratory
May 8, 2003

During the past several years, the Reston Chlorofluorocarbon Laboratory has been investigating methods of collection and preservation of water samples for chlorofluorocarbon analysis that can replace the present, somewhat labor-intensive, method of fusing water samples into borosilicate ampoules. A new procedure that involves filling and capping simple glass bottles with special foil-lined caps under water has been tested. Samples analyzed after storage over the past 6 months demonstrate the validity of the new method. This document describes the new sampling procedure and presents results of recent tests with the new CFC bottle method.

CFC bottle method

If archival of water samples for CFC or other VOC analysis for periods of more than 6 months is required, then it is recommended that water samples continue to be collected by fusing into borosilicate ampoules, as before (Busenberg and Plummer, 1992; water.usgs.gov/lab/cfc). Otherwise, water samples for CFC analysis can be collected in glass bottles capped with a special foil-lined cap, as described below.

Source of bottles and caps

Bottles and caps can be obtained from the SKS bottle company on the internet at URL **www.sks-bottle.com** . The bottles are 125ml (4 oz) boston round clear glass and have a cap size 22-400.

Item No. 40000040.01S is a case of 160 bottles with no caps.

Item No. 4000-04 is a case of 24 bottles with black cone lined caps. THESE BOTTLES HAVE THE WRONG CAPS! Discard these caps and replace them with the caps below.

Bottles are also available from any Wheaton glass supplier as Wheaton part number 217112, which is a case of 24 bottles with no caps.

The caps are sold as SKS item no. 6021-03, white metal caps with aluminum foil liner

in a bag of 144. USE ONLY THESE ALUMINUM LINED CAPS! THIS CAP IS THE KEY TO THE METHOD. Discard any caps, if the foil liner appears scratched, dented, or altered in any way.

Filling procedure

INSTRUCTION GIVEN BELOW MUST BE FOLLOWED TO THE LETTER TO OBTAIN GOOD RESULTS WITH THE BOTTLE SAMPLING METHOD FOR CFCs IN GROUND WATER.

We are receiving too many samples with loose caps and caps that are not properly taped (**see below for examples**).

The bottles and caps should be THOUROGHLY rinsed with the ground water. The bottles are filled underwater in a beaker and capped underwater. Refrigeration-grade copper tubing is required, as previously used in the ampoule method. The filling procedure is carried out within a two to four liter beaker. A plastic beaker is fine. Collect 5 bottles per well or spring.

The procedure is shown below and is as follows (**refer to the figure below**):

1. After the well has been purged, place the bottle in the beaker and then insert the end of the copper tubing from the pump all the way into the **bottom** of the bottle. Also place all the caps (5 or more) in the beaker.
2. Fill the bottle as shown with well water until it overflows.
3. Continue to overflow the bottle until the beaker overflows. Allow at least 2 liters of water to flow through the bottle and out of the beaker.
4. Select a cap from the bottom of the beaker and tap it under water to dislodge air bubbles. Remove the copper tube from the bottle and **TIGHTLY cap the bottle underwater** without allowing the water in the bottle to come in contact with air. Flushing the bottle with more water is far better than with less water
5. Remove the capped bottle from the beaker, dry the bottle and **RE-TIGHTEN** the cap. The tighter the cap the better.
6. Invert the bottle, tap it and check it for air bubbles. If there are bubbles, repeat the procedure from step 2 above. If it is necessary to refill the bottle, you must use a **new** cap.
7. If there are no bubbles present, tape the cap **securely** to the bottle with **electrical tape**. Wrap the tape in a clockwise direction looking down from the bottle top. Two rounds of electrical tape are needed. Do not forget to label each bottle with the well name, date, and time of sampling and the sequence number of each bottle as it was collected, one through five, in the order of collection.
8. Store bottles upside down until shipment.

USE ONLY THE METAL BOTTLE CAPS DESCRIBED IN THE TEXT ABOVE

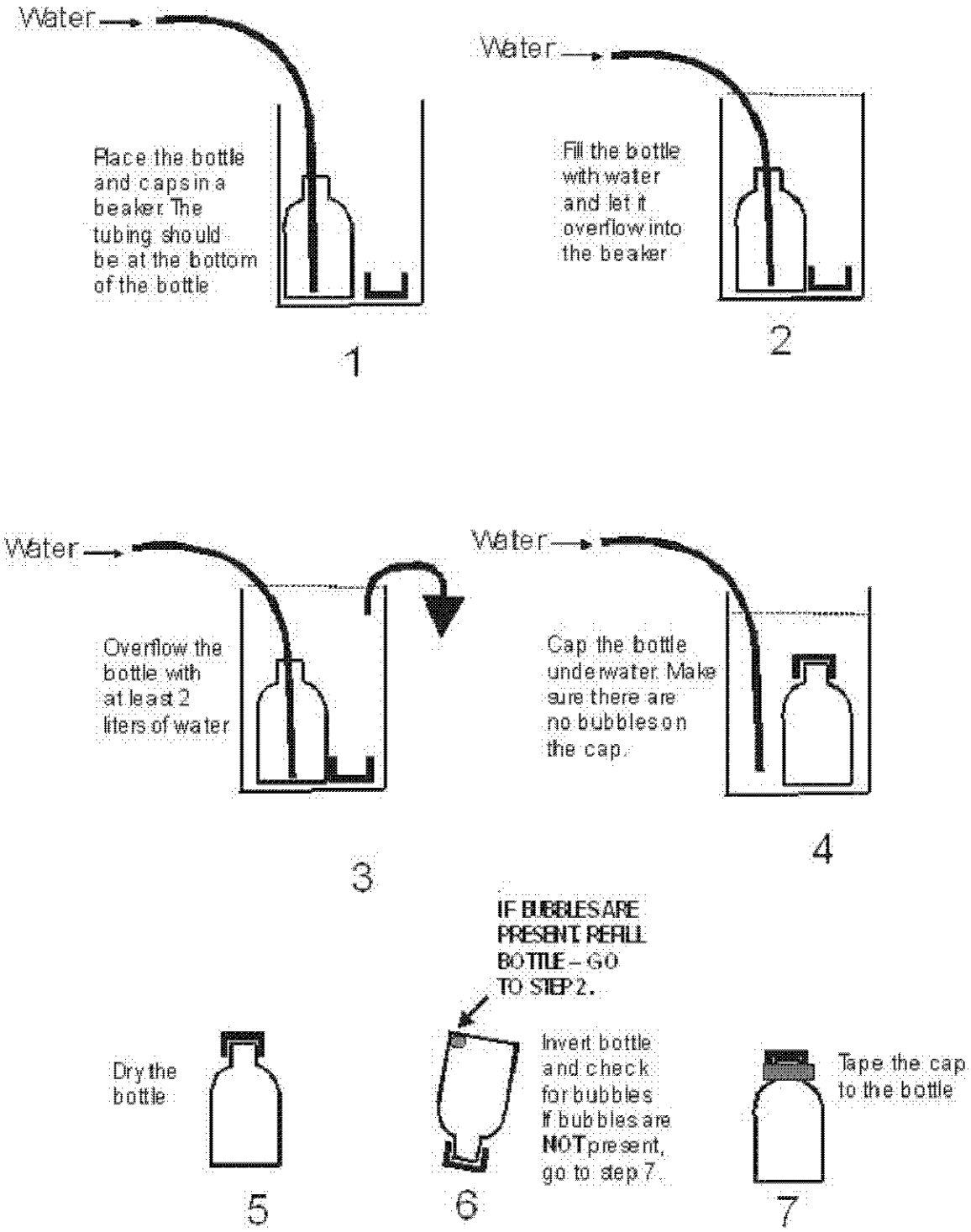

USE ONLY THE METAL BOTTLE CAPS DESCRIBED IN THE TEXT ABOVE

Examples of properly and improperly sealed bottles

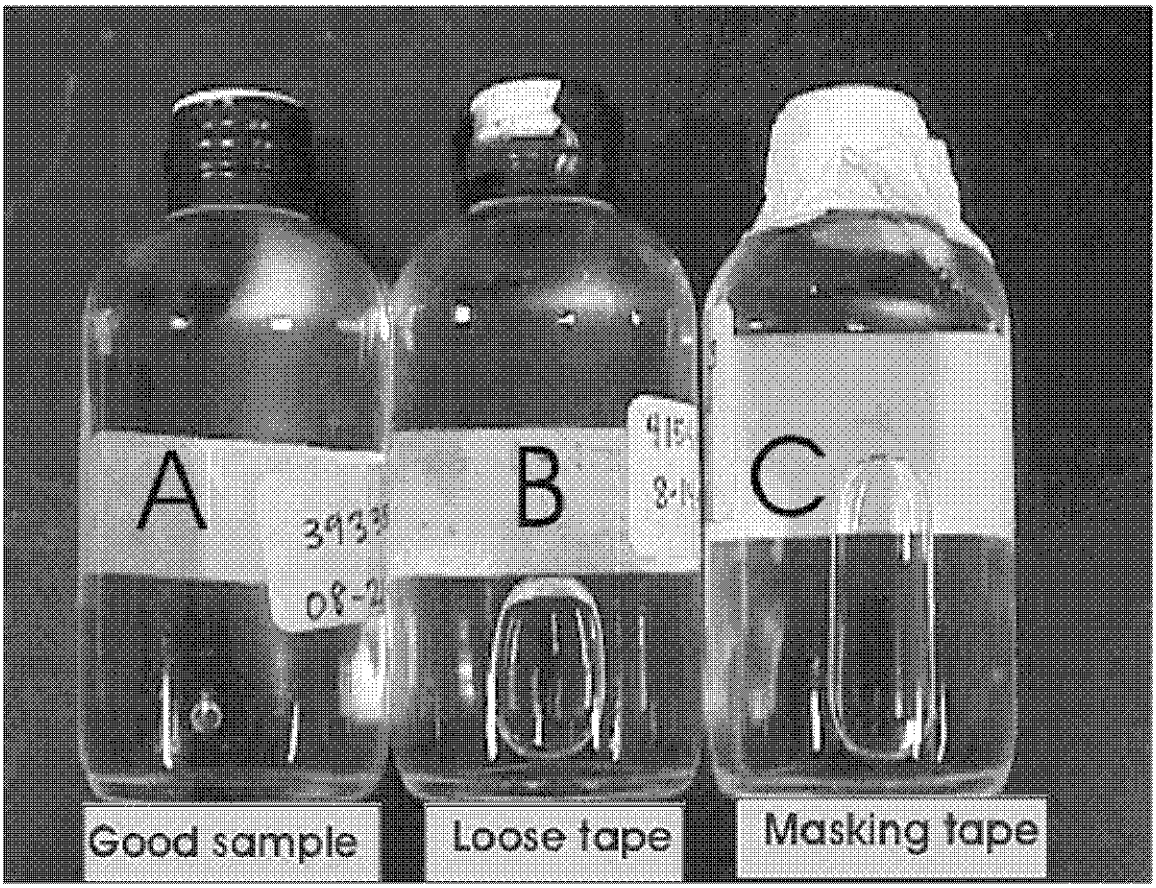

A. Good example. Very tiny bubble formed.

B. Poorly taped cap, air leak - note the large bubble that formed.

C. Cap taped with masking tape, poor seal and large air bubble formed.

Results of tests comparing CFC analyses of waters collected in ampoules and in bottles
A large number of ampoules and bottles were collected from two sources--

(1) water from Hudson Spring which discharges from a limestone karst near the base of the Blue Ridge Mountains at Luray, Virginia, and

(2) water from a deep well in Coastal Plain sands near Milford, Virginia.

Hudson Spring has been sampled for CFCs and $^{3}h/^{3}he$ over a period of several years and has consistently yielded water with apparent ages from the mid-1970s. Water from the Milford well was expected to be at or near the detection limit for all CFCs. The comparison of ampoules and bottles has continued for 153 days for water from Hudson Spring and 98 days for water from the Milford well. CFC concentrations in water from the Milford well were near or below the detection limit of 2 pg/kg in both ampoules and bottles. In a few cases, water from the Milford well contained detectible CFC-12 but pairs of ampoules and bottles agreed within ± 1 pg/kg in a range of 0 to 10 pg/kg (pre-1954 water). Apparently, there was some small variation in the CFC composition of water discharged from the well. CFC-113 was not detected in either ampoule or bottle, which eliminated the possibility of air contamination during storage. There was likely trace interference of an unknown VOC that gave the appearance of 4-5 pg/kg of CFC-11. Even if the tracer interference was CFC-11, the interpreted apparent recharge date would be pre-1950 for CFC-11 which is near the detection limit of the dating method.

The figures below compare concentrations of CFC-11, CFC-12, and CFC-113 measured in water from ampoules and bottles from Hudson Spring, as a function of storage time and as a function of collection time. The tests are being continued, but preliminary results indicate that blanks can be collected and stored using the bottle method. It is anticipated that water samples collected in bottles will be analyzed within 4 months of the date they are received at the Reston Chlorofluorocarbon Laboratory. Samples should be shipped promptly to the Reston Chlorofluorocarbon Laboratory following collection.

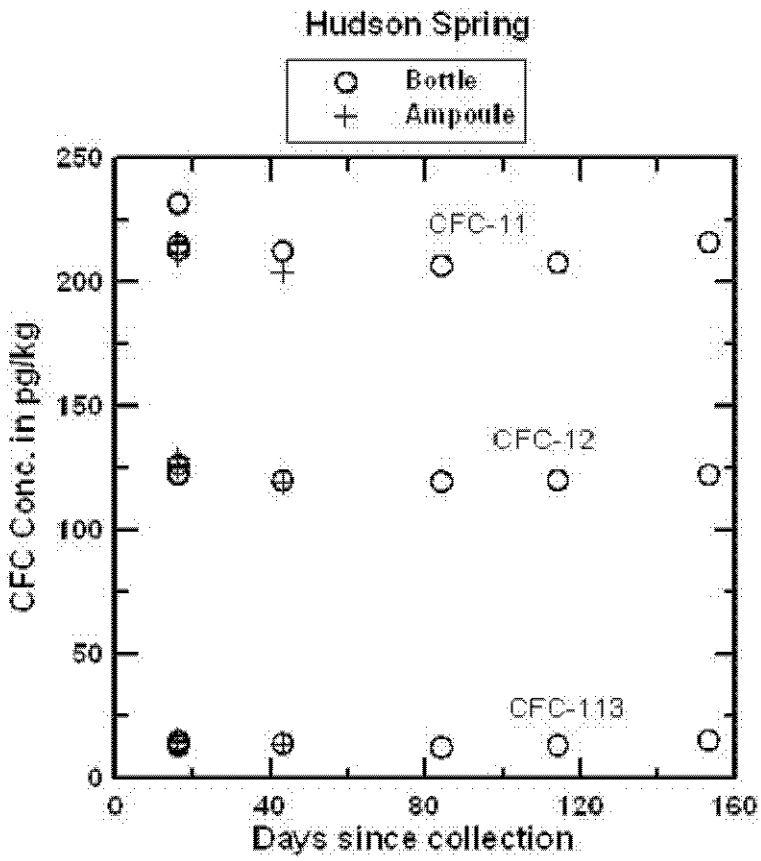

Plot comparing CFC-11, CFC-12 and CFC-113 concentrations in water from Hudson Spring analyzed after storage of more than 40 days in fused borosilicate ampoules and more than 150 days in glass bottles. In terms of apparent age interpretation, the small variations imply differences of less than 0.5 years. And as shown below, the small differences in concentrations more likely reflect differences in concentrations in discharge from the spring over the period of collection of ampoules and bottles (several hours), than changes on storage.

(continued)

U.S. Department of the Interior
U.S. Geological Survey, Reston, VA, USA
Last Modified on Wednesday, August 11, 2004
Original Design by Brian C. Norton | 2004 Design by Chad M. Veloso
Web Page Feedback

The Reston Chlorofluorocarbon Laboratory

CFC > SAMPLING

New CFC Sampling Method (continued)

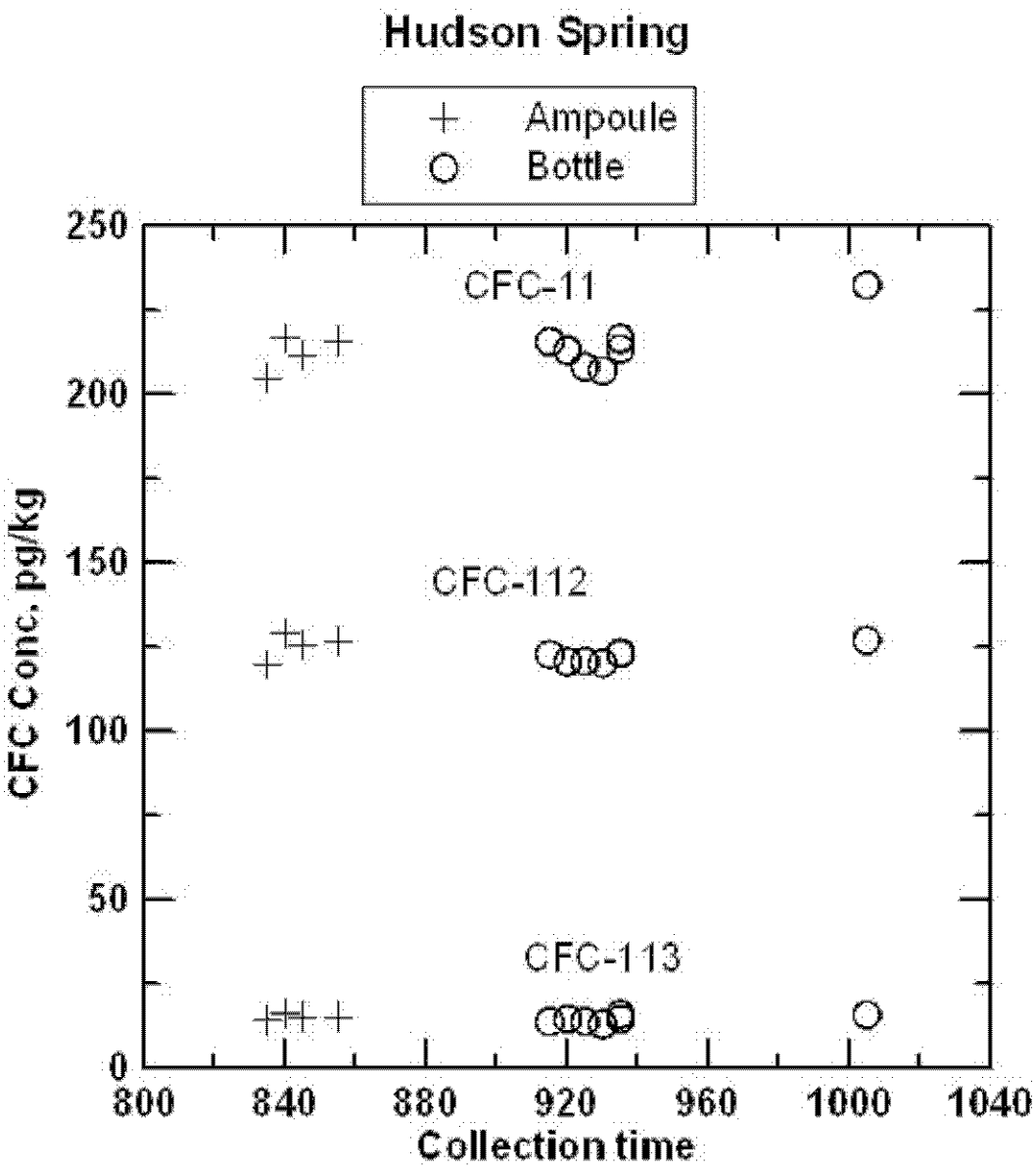

Comparison of CFC-11, CFC-12, and CFC-113 measured in ampoules and bottles plotted in sequence of field collection. The plot suggests that at least some of the very small variations observed represent real variations in water composition discharging from the spring, rather than changes occurring during storage.

Photos

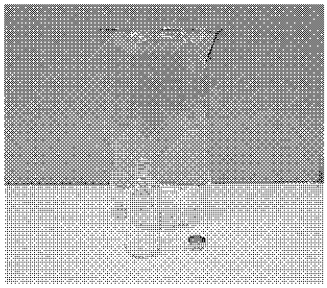
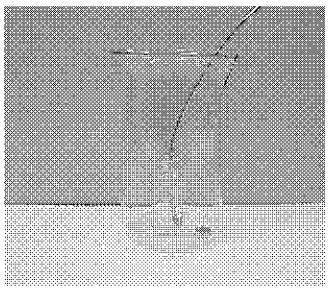
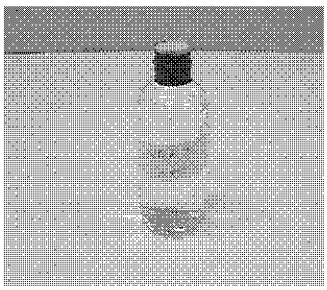

(click for larger image)

Disclaimer

The Reston Chlorofluorocarbon Laboratory has more than 10 years of experience in collection and storage of CFCs in fused borosilicate ampoules. Reliable results can be obtained from this sampling and storage method. We are just gaining experience with the bottle method. Though the results are quite promising, and, at this time we do not have data to the contrary, there may be unanticipated complications in the future. The final decision on which sampling method to use rests with the customer.

U.S. Department of the Interior
U.S. Geological Survey, Reston, VA, USA
Original Design by Brian C. Norton | 2004 Design by Chad M. Veloso
Web Page Feedback

Last Modified on Wednesday, August 11, 2004

4D: SF_6 SAMPLING

The Reston SF_6 Laboratory

SF_6 Sampling

The SF_6 mixing ratio of in air and the solubility of this gas in water are low. A 15 cm^3 sample of air or unsaturated zone gas is needed for gas analysis. A minimum of a 1 liter of water is required to date ground water with SF_6.

Collection of Water Samples

Ground water samples are collected in 1 liter glass bottles. The water in-flow tube is placed in the bottom of the bottle displacing the air in the bottle with water. After at least 2liters of over-flow, the tube is removed. The bottles are capped with Polyseal screw-caps without headspace, which are taped to the bottle with electrical tape. The bottles are shipped in coolers to the Chlorofluorocarbon Laboratory in Reston, Virginia for analysis.

Gas Sampling Procedures

Gas samples can be collected in stainless steel cylinders that are equipped with inflow and outflow stainless-steel bellows valves. This design, allows the cylinders to be flushed by the pumped air stream. The procedures that are used to collect gas samples in stainless steel cylinders are described in detail by Busenberg et al. (1991) and Thompson et al. (1985). The cylinders were filled in the laboratory with ultra-pure SF_6-free N_2. The N_2 in the cylinders is released prior to sampling by opening the outflow valves. The inflow valves are then opened to allow air flow through the cylinders for several minutes. After the cylinders are completely flushed with air, the outflow valve is closed and pumping continues to pressurize the cylinder to about 2 atmospheres before closing the inflow valve.

Gas samples can be collected in 100 mL borosilicate glass ampoules using procedures developed for sampling for CFCs (Busenberg and Plummer, 1992). The gas samples are heat-sealed in borosilicate glass ampoules with a torch.

Bottle Ordering Information

A 1-Liter / 32 oz. glass bottle with a polyseal cone lined cap is used.

You can order these 1-Liter bottles from Wheaton Scientific.

Catalog # 220726 - a safety coated glass bottle is preferred for sampling. Order cap separately. Safety coated bottles ship better than regular glass bottles. Regular uncoated glass bottles with polyseal cone lined caps can be used.

Field Collection of SF_6

1) Purge well

2) Place tubing from pump in the bottom of 1L bottle

3) Fill bottle and allow it to overflow from the neck (about 2.5L)

4) Slowly remove tubing from the bottle while water is still flowing

5) Cap bottle (**do not leave any headspace**) and tape cap in a clockwise direction with electrical or similar tape.

6) Keep bottles in the cooler and not in the sun (water expands when heated and breaks the bottles)

Other Considerations

Shelf Life of SF_6 Samples

No change in concentration of SF_6 was observed after storage of 3 months.

Modification of SF_6 by Microbial Activity

No perceptible degradation of SF_6 was observed in highly reducing waters.

Unsaturated Zone Processes

When the unsaturated zone is relatively thin, the unsaturated-zone air composition tracks that of the troposphere (Oster et al., 1996). It is reasonable to assume unsaturated-zone SF_6 concentrations closely track tropospheric concentrations to unsaturated zone depths of less than 10 m (Weeks et al., 1982; Busenberg et al., 1993), in deeper unsaturated zones, there is a lag time for diffusive transport of SF_6 through the unsaturated zone. The time lag is largely a function of the tracer diffusion coefficients, tracer solubility in water, and soil water content (Weeks et al., 1982; Cook and Solomon, 1995).

Dissolved Gases in Ground Water

It is recommended that some dissolved gas analyses be performed to determine the **recharge temperature** and the amount of **excess air** present in the ground waters.

Recharge Temperature

Uncertainty in recharge temperature of 1 to 2°C introduces no significant error in the SF_6 model ground water age (±0.5 year) because of the rapid increase in the atmospheric mixing ratio of SF_6 of about 7 % per year (Geller et al., 1997).

Excess Air

Excess air is introduced into ground water when air bubbles dissolve during a rapid rise of the water table. The addition of excess air to ground water increases the SF_6 concentration of the groundwater above the air-water equilibrium concentration. If the presence of excess air is not considered in the calculation of an SF_6 model age, then the apparent age will be too young. If the excess air present in the ground water was not known, and was underestimated by one cm^3/kg of water at STP for typical U.S. ground waters, the age of the ground water will be under estimated by 1 to 2.5 years. In all cases, the error in the apparent date of recharge was higher for the waters that were recharged at the higher temperature. Excess air concentrations of 0 to about 2 cm^3/liter were found from N_2-Ar measurements on shallow groundwater recharged by aerial

infiltration through sandy soils, however, concentrations as high as 10 cm^3/liter can be found in ground waters from some semi-arid regions.

U.S. Department of the Interior
U.S. Geological Survey, Reston, VA, USA
Original Design by Brian C. Norton | 2004 Design by Chad M. Veloso
Web Page Feedback
Last Modified on Wednesday, August 11, 2004